SAN BENITO CISD
ADDITIONS AND RENOVATIONS
AT SAN BENITO HIGH SCHOOL AND SULLIVAN ELEMENTARY
RFCSP-0819-NEHSSL

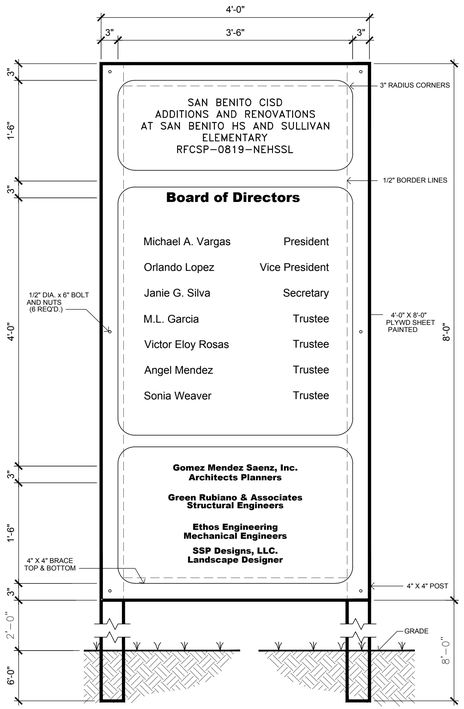

01 PROJECT SIGN

NOT TO SCALE
2 SIGNS REQUIRED ONE AT EACH CAMPUS

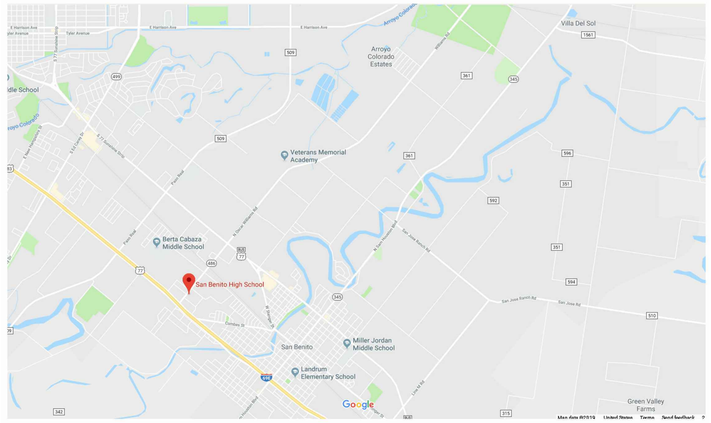

SAN BENITO HIGH SCHOOL

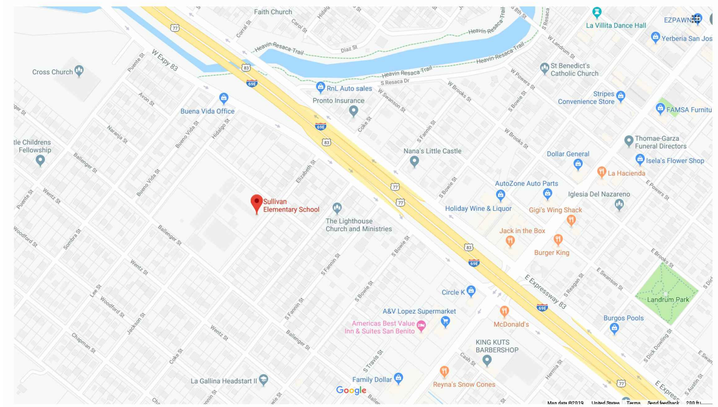

SULLIVAN ELEMENTARY SCHOOL

Board of Directors 2018-2020

Michael A. Vargas	President
Orlando Lopez	Vice President
Janie G. Silva	Secretary
M.L. Garcia	Trustee
Victor Eloy Rosas	Trustee
Angel Mendez	Trustee
Sonia Weaver	Trustee

DRAWING INDEX

LANDSCAPE DRAWINGS
BID PACKAGE "A" & "B"

L1.00 TREE SURVEY
L1.01 IRRIGATION PLAN
L1.02 IRRIGATION DETAILS
L2.01 LANDSCAPE PLANS
L2.02 LANDSCAPE DETAILS

ARCHITECTURAL
BID PACKAGE "A" HIGH SCHOOL

G1.00 TDLR GUIDELINES FOR ACCESSIBILITY
G1.01 TDLR GUIDELINES FOR ACCESSIBILITY

D1.01 DEMOLITION PLAN
A1.01 CAMPUS SITE PLAN
A2.01 FLOOR PLAN
A2.02 FIXTURE PLAN
A2.03 ROOF PLAN
A3.01 MILL WORK
A4.00 BUILDING SECTIONS
A4.01 WALL SECTIONS
A4.02 WALL SECTIONS
A4.03 WALL SECTIONS
A5.01 EXTERIOR ELEVATIONS

ARCHITECTURAL
BID PACKAGE "B" ELEMENTARY

G1.00 TDLR GUIDELINES FOR ACCESSIBILITY
G1.01 TDLR GUIDELINES FOR ACCESSIBILITY

D1.01 DEMOLITION PLAN
B1.01 CAMPUS SITE PLAN
B2.01 FLOOR PLAN
A2.02 FIXTURE PLAN / MILL WORK
A2.03 ROOF PLAN
B4.01 WALL SECTIONS
B4.02 WALL SECTIONS
B4.03 WALL SECTIONS
B5.01 EXTERIOR ELEVATIONS

STRUCTURAL
BID PACKAGE "A" HIGH SCHOOL

AS1.1 GENERAL STRUCTURAL NOTES
AS1.2 GENERAL STRUCTURAL NOTES
AS1.3 STUD FRAMING DETAILS
AS1.4 FRAMING DETAILS
AS2.0 FOUNDATION DIMENSION PLAN
AS2.1 FOUNDATION PLAN
AS2.2 FOUNDATION DETAILS
AS3.1 ROOF FRAMING PLAN
AS3.2 BRACE PROFILES
AS4.1 FRAMING DETAILS
AS4.2 FRAMING DETAILS

STRUCTURAL
BID PACKAGE "B" ELEMENTARY

BS1.1 GENERAL STRUCTURAL NOTES
BS1.2 GENERAL STRUCTURAL NOTES
BS1.3 STUD FRAMING DETAILS
BS2.0 FOUNDATION DIMENSION PLAN
BS2.1 FOUNDATION PLAN
BS2.2 FOUNDATION DETAILS
BS3.1 ROOF FRAMING PLAN
AS3.2 BRACE PROFILES
AS4.1 FRAMING DETAILS
AS4.2 FRAMING DETAILS

M.E.P.
BID PACKAGE "A" HIGH SCHOOL

MECHANICAL:
AM1.01 MECHANICAL GENERAL NOTES & ABBREVIATIONS
AM2.01 MECHANICAL PLAN
AM3.01 MECHANICAL ROOF PLAN
AM4.01 MECHANICAL SCHEDULES
AM5.01 MECHANICAL DETAILS
AM5.02 MECHANICAL DETAILS & ELEVATIONS

ELECTRICAL:
AE1.01 ELECTRICAL SITE PLAN
AE2.01 ELECTRICAL SYMBOL LEGEND AND ABBREVIATIONS
AE3.01 DEMOLITION ELECTRICAL PLAN
AE3.02 LIGHTING & ELECTRICAL PLAN
AE3.03 ELECTRICAL ROOF PLAN
AE4.01 LUMINAIRE SCHEDULE & IMAGES
AE5.01 ELECTRICAL RISER DIAGRAM & SCHEDULES
AE6.01 ELECTRICAL DETAILS

PLUMBING:
AP2.01 PLUMBING ROOF PLAN, SCHEDULES & DETAILS

M.E.P.
BID PACKAGE "B" ELEMENTARY

MECHANICAL:
BM1.01 MECHANICAL GENERAL NOTES & ABBREVIATIONS
BM2.01 MECHANICAL PLAN
BM3.01 MECHANICAL SCHEDULES
BM4.01 MECHANICAL DETAILS

ELECTRICAL:
BE1.01 ELECTRICAL SYMBOL LEGEND AND ABBREVIATIONS
BE2.01 DEMOLITION ELECTRICAL PLAN
BE2.02 LIGHTING & ELECTRICAL PLAN
BE3.01 LUMINAIRE SCHEDULE & IMAGES
BE4.01 ELECTRICAL DETAILS

PLUMBING:
BP3.01 PLUMBING ROOF PLAN, SCHEDULES & DETAILS

LANDSCAPE
SSP LANDSCAPE DESIGN
789 EAST WASHINGTON BROWNSVILLE, TEXAS 78520
(956) 547-9788 FAX: (956) 547-9977

ARCHITECTS
GOMEZ MENDEZ SAENZ, INC.
1150PAREDES LINE RD. BROWNSVILLE, TX. 78521
PH. (956) 546-0110 FAX. (956) 546-0196

STRUCTURAL ENGINEERS
GREEN RUBIANO & ASSOCIATES
1220W. HARRISON HARLINGEN, TX 78550
PH. (956) 428-4461 FAX (956) 428-0281

MECHANICAL ENGINEERS
ETHOS ENGINEERING - M.E.P.
119 VAN BUREN, SUITE 101 HARLINGEN, TEXAS 78550
(956) 230-3435 FAX: (956) 720-0830

No.	REVISIONS	BY

GMS ARCHITECTS
1150 paredes line rd.
brownsville
texas 78526
(956) 546-0110
fax (956) 546-0196

SAN BENITO CISD
ADDITIONS AND RENOVATIONS AT SAN BENITO HS AND SULLIVAN ELEMENTARY
RFCSP-0819-NEHSSL

SAN BENITO TEXAS

REGISTERED ARCHITECT RAMON GABRIEL MENDEZ 23623 STATE OF TEXAS

COPYRIGHT 2019
GOMEZ MENDEZ SAENZ INC.
ARCHITECTS-PLANNERS

DATE	MAY, 2019
SCALE	As Shown
DRAWN	R GOMEZ IO
JOB	S5001119
SHEET	CVR

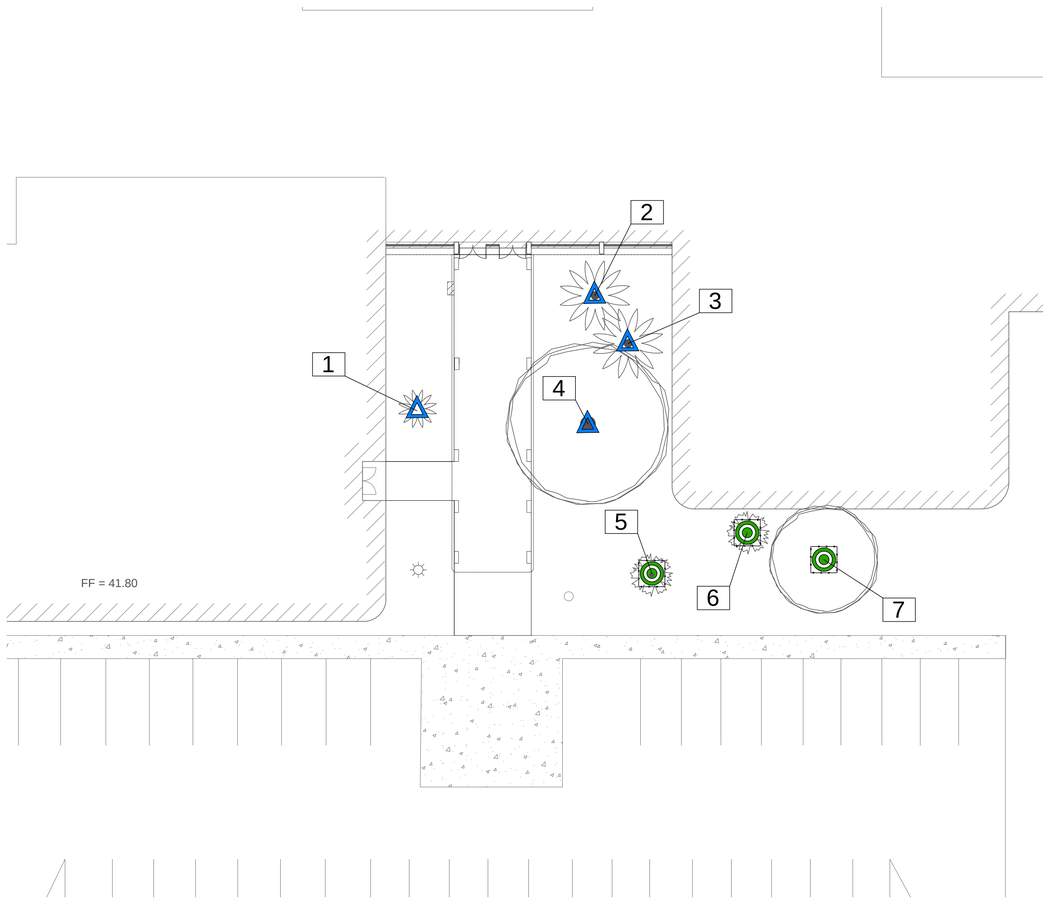

BID PACKAGE "A"

1 SAN BENITO HIGH SCHOOL TREE SURVEY/RELOCATION PLAN

SCALE: 1"=10'-0"

BID PACKAGE "B"

2 SAN BENITO SULLIVAN ELEMENTARY TREE SURVEY/RELOCATION PLAN

SCALE: 1"=10'-0"

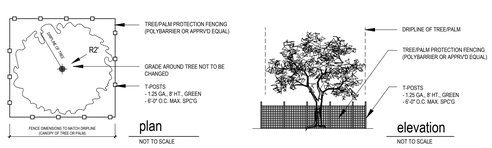

3 TREE/PALM PROTECTION FENCING

NOT TO SCALE

CONTRACTOR NOTES

1. CONTRACTOR SHALL PROTECT ALL VEGETATION WITHIN PROJECT AREA LABELED TO REMAIN WITH PROTECTION FENCING PER DETAIL/SPECIFICATIONS.
2. CONTRACTOR IS RESPONSIBLE FOR ALL PROTECTION MEASURES AND SHALL REPLACE ANY DAMAGED VEGETATION LABELED FOR PROTECTION WITH EQUAL SIZE AND TYPE.
3. PROTECTED AND RELOCATED TREES WITHIN PROJECT AREA SHALL BE TRIMMED/PRUNED BY AN ISA CERTIFIED ARBORIST.
4. SEE SPECIFICATIONS FOR FURTHER INFORMATION AND REQUIREMENTS.

LEGEND

	TO REMAIN WITH CHAIN LINK PROTECTION FENCE
	TO REMOVE
	TO RELOCATE

TREE PRESERVATION/RELOCATION SCHEDULE SAN BENITO HIGH SCHOOL

	TYPE OF TREE/PALM	SYM.	CAL.	NOTE
1	PYGMY DATE PALM		5' HT.	TO RELOCATE
2	COCOS PALM		15' HT.	TO RELOCATE
3	COCOS PALM		12' HT.	TO RELOCATE
4	LIVE OAK TREE		16"	TO RELOCATE
5	WASHINGTONIA PALM		35' HT.	TO REMAIN
6	WASHINGTONIA PALM		45' HT.	TO REMAIN
7	WILD OLIVE		12"	TO REMAIN

TREE PRESERVATION/RELOCATION SCHEDULE SAN BENITO SULLIVAN ELEMENTARY

	TYPE OF TREE/PALM	SYM.	CAL.	NOTE
1	ASH TREE		24"	TO REMAIN
2	CRAPE MYRTLE		6"	TO REMAIN
3	LIVE OAK TREE		12"	TO REMAIN
4	LIVE OAK TREE		10"	TO REMAIN
5	ASH TREE		10"	TO REMAIN
6	LIVE OAK TREE		14"	TO REMAIN
7	LIVE OAK TREE		10"	TO REMAIN
8	ASH TREE		24"	TO REMAIN
9	LIVE OAK TREE		10"	TO REMAIN
10	ASH TREE		10"	TO REMAIN
11	WILD OLIVE		12"	TO REMAIN

No.	REVISIONS	BY

GMS ARCHITECTS
1150 paredes line rd.
brownsville
texas 78526
(956) 546-0110
fax (956) 546-0196

SAN BENITO TEXAS

SAN BENITO CISD
ADDITIONS AND RENOVATIONS AT SAN BENITO HS AND
SULLIVAN ELEMENTARY
RFCSP-0819-NEHSSL

COPYRIGHT 2017
GOMEZ MENDEZ SAENZ INC.
ARCHITECTS·PLANNERS

DATE	AUGUST 2, 2019
SCALE	As Shown
DRAWN	
JOB	S5001119
SHEET	L1.00

NOTE:

CONTRACTOR SHALL PROTECT EXISTING LANDSCAPE, IRRIGATION AND LAWNS. ANY DAMAGE CAUSED BY CONSTRUCTION ACTIVITY, LAY-DOWN/STORAGE AREAS, ETC. SHALL BE REPAIRED TO MATCH CONDITIONS PRIOR TO CONSTRUCTION. THIS MAY INCLUDE IRRIGATION REPAIRS, SODDING, SEEDING, PLANTING AND CLEANUP.

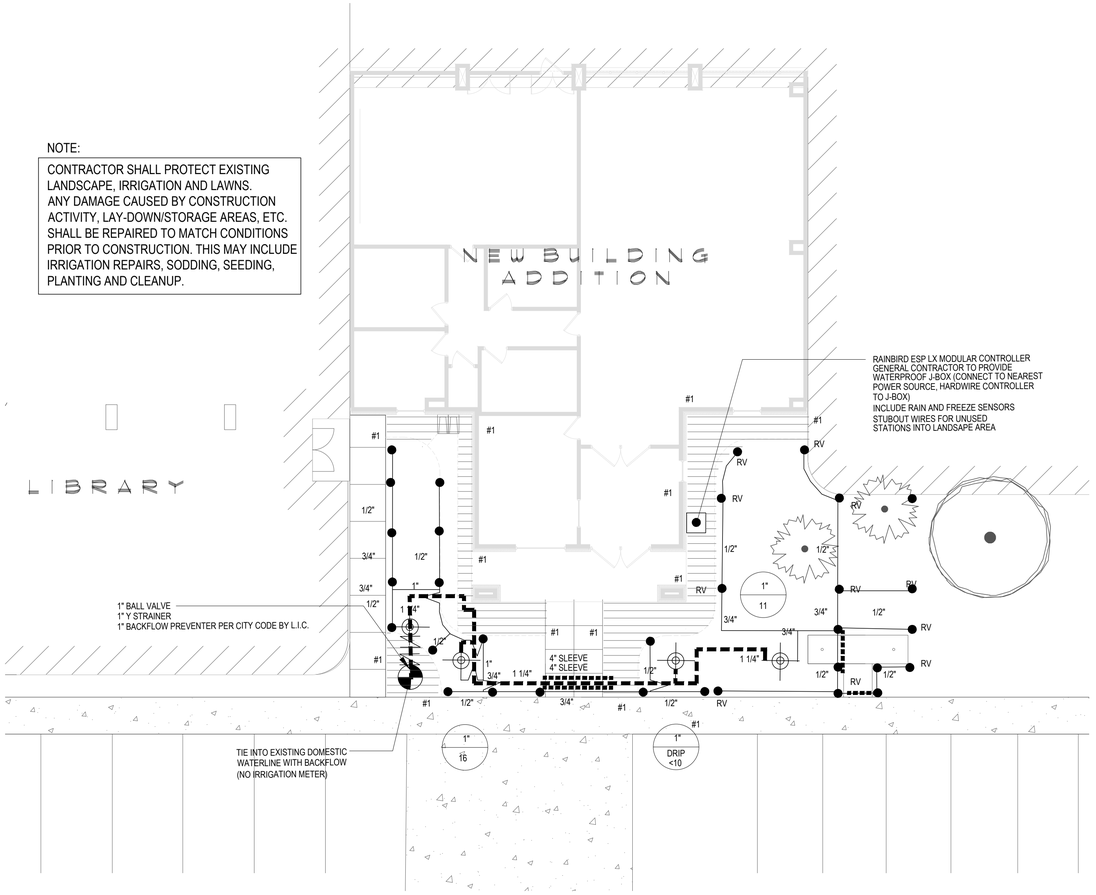

BID PACKAGE "A"

1 SAN BENITO HIGH SCHOOL IRRIGATION PLAN

SCALE: 1"=10'-0"

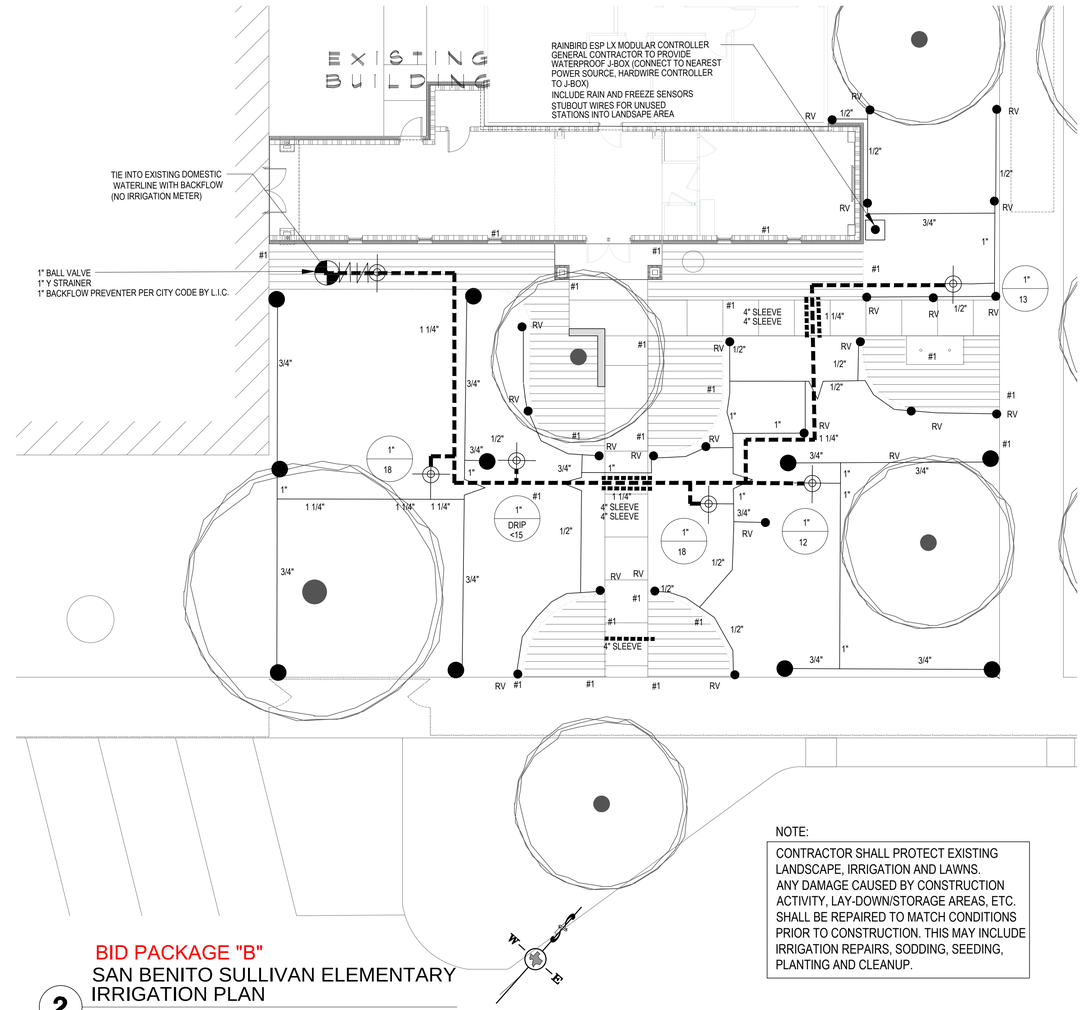

BID PACKAGE "B"

2 SAN BENITO SULLIVAN ELEMENTARY IRRIGATION PLAN

SCALE: 1"=10'-0"

NOTE:

CONTRACTOR SHALL PROTECT EXISTING LANDSCAPE, IRRIGATION AND LAWNS. ANY DAMAGE CAUSED BY CONSTRUCTION ACTIVITY, LAY-DOWN/STORAGE AREAS, ETC. SHALL BE REPAIRED TO MATCH CONDITIONS PRIOR TO CONSTRUCTION. THIS MAY INCLUDE IRRIGATION REPAIRS, SODDING, SEEDING, PLANTING AND CLEANUP.

IRRIGATION LEGEND

- RV — RAINBIRD R-VAN SERIES ROTARY NOZZLES
- RAINBIRD 5000 PC
- RAINBIRD 5000 FC
- RAINBIRD PEB SERIES ELECTRIC VALVE
- CONTROLLER (ESP-LX) RAINBIRD WIRELESS RAIN/FREEZE SENSOR
- WATER METER (EXISTING DOMESTIC)
- BACKFLOW PREVENTER (AS SIZED)
- CLASS 200 PVC LATERAL PIPING
- CLASS 200 PVC MAINLINE
- SCH. 40 PVC SLEEVING (AS SIZED)
- VALVE SIZE / GPM

DRIPLINE (BED)

RAINBIRD DRIPLINE XFS
(18" LATERAL SPACING, 12" EMITER SPACING)
XF SERIES TIE DOWN STAKES (TDS-050) @ 36" O.C. & TWO ON EACH TEE/ELBOW
PVC LATERAL PIPING SIZED AS REQUIRED
RAINBIRD DRIP CONTROL ZONE KIT XCZ-100-PRB-COM (EACH DRIP ZONE)
1" BALL VALVE WITH REGULATED PRESSURE AND 200 MESH FILTRATION
(1) DRIP SYSTEM OPERATION INDICATOR (OPERIND) PER IRRIGATION ZONE
ALL VALVE BOXES SHALL BE RAINBIRD VB-STD OR APPROVED EQUAL
ALL VALVE BOXES SHALL HAVE FILTER FABRIC AND 4" OF GRAVEL AT BASE

INSTALL ALL EQUIPMENT ACCORDING TO MANUFACTURERS SPECIFICATIONS

SLEEVING NOTES

1. Irrigation Contractor shall supply and install sleeves and conduits at twenty-four (24") inches below finish grade of the top of pavement. Bore as required.
2. Irrigation Contractor shall extend sleeves one (1') foot beyond edge of all pavement.
3. Irrigation Contractor shall cap pipe ends using PVC caps.
4. All sleeves shall be Schedule 40 PVC pipe.
5. ALL sleeves shall be bored under existing pavement.

NOTE:

Irrigation Contractor to coordinate with Landscape Contractor on layout of all beds. Adjust drip line location per installed edging.

BUBBLER PIPING CHART

NUMBER OF BUBBLERS	SIZE OF PIPE
1 - 5	½"
6 - 10	¾"
11 - 20	1"
21 - 30	1 ¼"
31 - 40	1 ½"

No.	REVISIONS	BY

GMS ARCHITECTS
1150 paredes line rd.
brownsville
texas 78526
(956) 546-0110
fax (956) 546-0196

RFCSP-0819-NEHSSL

SAN BENITO CISD
ADDITIONS AND RENOVATIONS AT SAN BENITO HS AND SULLIVAN ELEMENTARY
RFCSP-0819-NEHSSL

SAN BENITO TEXAS

STATE OF TEXAS
JOHN LAWRENCE FELTS
851
LICENSED IRRIGATOR

8/2/19

COPYRIGHT 2017
GOMEZ MENDEZ SAENZ INC.
ARCHITECTS-PLANNERS

DATE	AUGUST 2, 2019
SCALE	As Shown
DRAWN	
JOB	S5001119
SHEET	L1.01

IRRIGATION LEGEND

RV ● RAINBIRD R-VAN SERIES ROTARY NOZZLES

● RAINBIRD 5000 PC

○ RAINBIRD 5000 FC

RAINBIRD PEB SERIES ELECTRIC VALVE

CONTROLLER (ESP-LX)
RAINBIRD WIRELESS RAIN/FREEZE SENSOR

WATER METER (EXISTING DOMESTIC)

BACKFLOW PREVENTER (AS SIZED)

CLASS 200 PVC LATERAL PIPING

CLASS 200 PVC MAINLINE

SCH. 40 PVC SLEEVING (AS SIZED)

VALVE SIZE
GPM

DRIPLINE (BED)

RAINBIRD DRIPLINE XFS
(18" LATERAL SPACING, 12" EMITER SPACING)
XF SERIES TIE DOWN STAKES (TDS-050) @ 36" O.C. & TWO ON EACH TEE/ELBOW
PVC LATERAL PIPING SIZED AS REQUIRED
RAINBIRD DRIP CONTROL ZONE KIT XCZ-100-PRB-COM (EACH DRIP ZONE)
1" BALL VALVE WITH REGULATED PRESSURE AND 200 MESH FILTRATION
(1) DRIP SYSTEM OPERATION INDICATOR (OPERIND) PER IRRIGATION ZONE
ALL VALVE BOXES SHALL BE RAINBIRD VB-STD OR APPROVED EQUAL
ALL VALVE BOXES SHALL HAVE FILTER FABRIC AND 4" OF GRAVEL AT BASE

INSTALL ALL EQUIPMENT ACCORDING TO
MANUFACTURERS SPECIFICATIONS

DESIGN PRESSURE 60 PSI

ELECTRICAL SPLICES AT EACH VALVE AND CONTROLLER ONLY.

IRRIGATION IN TEXAS IS REGULATED BY THE TEXAS COMMISSION ON ENVIRONMENTAL QUALITY (TCEQ) MC-178/ P.O.BOX 13087, AUSTIN, TX 78711-3087. TECQ'S WEBSITE IS: www.tceq.state.tx.us

IRRIGATION NOTES

1. All equipment numbers reference Rainbird equipment catalog unless otherwise indicated.
2. LAWN SPRAY HEADS are 1804 sam installed as per detail.
3. SHRUB SPRAY HEADS are 1812 sam installed as per detail.
4. ELECTRIC CONTROL VALVES shall be PEB installed as per detail shown. Size valves as shown on plans. Valves shall be installed in valve boxes large enough to permit manual operation, removal of solenoid and/or valve cover without any earth excavation.
5. AUTOMATIC CONTROLLER shall be installed at location shown. Power (120V) shall be located in a junction box within five feet (5') of controller location. Power supply and junction box to be provided by General Contractor.
6. All 24 volt valve wiring is to be UF 14 single conductor. All wire splices are to be permanent and waterproof.
7. SLEEVES shall be supplied and installed by Irrigation Contractor. Sleeve material shall be Schedule 40. Bore under existing pavement as required. Sizes as indicated on plans.
8. Ten days prior to start of construction, contractor shall verify static water pressure. If static pressure is less than 50 PSI, do not start work until notified to do so by SSP Design.
9. All mainline and lateral piping shall have a minimum of 12 inches of cover. All piping under paving shall have a minimum of 18 inches of cover.
10. The irrigation contractor shall coordinate installation of the system with the landscape contractor so that all plant material will be watered in accordance with the intent of the plans and specifications.
11. The irrigation contractor shall select the proper arc and radius for each nozzle to insure 100% and proper coverage of all lawn areas and plant material. All nozzles in parking lots and planting beds shall be low angle to minimize overspray on pavement surfaces. No water will be allowed to spray on building.
12. The irrigation contractor shall warranty all system coRVonents for a period of one year.
13. See specifications for further instructions and project requirements.

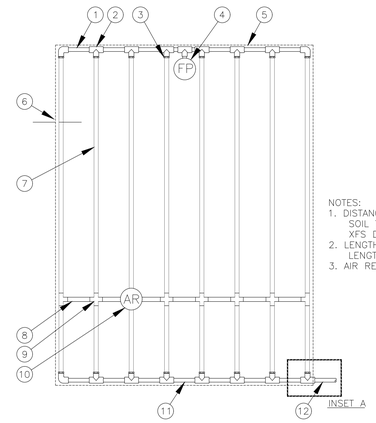

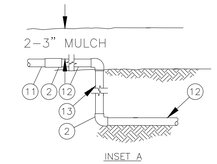

NOTES:
1. DISTANCE BETWEEN LATERAL ROWS AND EMITTER SPACING TO BE BASED ON SOIL TYPE, PLANT MATERIALS AND CHANGES IN ELEVATION. SEE RAIN BIRD XFS DRIPLINE INSTALLATION GUIDE FOR SUGGESTED SPACINGS.
2. LENGTH OF LONGEST DRIPLINE LATERAL SHOULD NOT EXCEED THE MAXIMUM LENGTH SHOWN IN THE ACCORVANYING TABLE.
3. AIR RELIEF VALVE TO BE INSTALLED AT HIGH POINT OF AREA.

XFS Dripline Maximum Lateral Lengths (Feet)						
	12" Spacing		18" Spacing		24" Spacing	
Inlet Pressure	Nominal Flow (GPH)		Nominal Flow (GPH)		Nominal Flow (GPH)	
psi	0.6	0.9	0.6	0.9	0.6	0.9
15	255	194	357	273	448	343
20	291	220	408	313	514	394
30	350	266	494	378	622	478
40	396	302	560	428	705	541
50	434	333	614	470	775	594

1. PVC EXHAUST HEADER
2. PVC SCH 40 TEE OR EL (TYPICAL)
3. BARB X MALE FITTING:
   RAIN BIRD XFD-MA FITTING (TYPICAL)
4. FLUSH POINT (TYPICAL)
   SEE RAIN BIRD DETAIL "XFS FLUSH POINT" OR "XFS FLUSH POINT WITH BALL VALVE"
5. PERIMETER OF AREA
6. PERIMETER DRIPLINE PIPE TO BE INSTALLED 2"-4" FROM PERIMETER OF AREA
7. SUB-SURFACE DRIPLINE:
   RAIN BIRD XF SERIES DRIPLINE (TYPICAL)
   POTABLE: XFS DRIPLINE
   NON-POTABLE: XFSP DRIPLINE
8. ⅛" POLYETHYLENE BLANK TUBING:
9. RAIN BIRD XF SERIES BLANK TUBING
   BARB X BARB INSERT TEE OR CROSS:
10. RAIN BIRD XFD-TEE OR
    RAIN BIRD XFD-CROSS (TYPICAL)
    AIR RELIEF VALVE:
11. RAIN BIRD AR VALVE KIT
    SEE RAIN BIRD DETAIL "AIR RELIEF VALVE KIT"
    PVC SUPPLY HEADER
12. PVC DRIP MANIFOLD FROM RAIN BIRD CONTROL ZONE VALVE KIT (SIZED TO MEET LATERAL FLOW DEMAND)
13. PVC SCH 40 RISER PIPE

6 IRRIGATION SYSTEMS
END FEED LAYOUT INST. N.T.S.

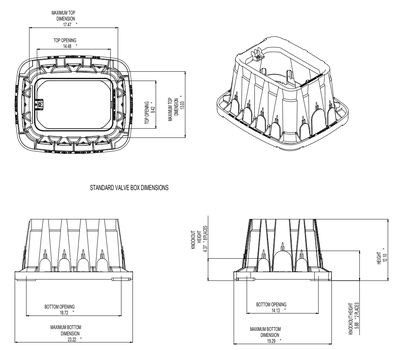

ALL VALVE BOXES SHALL BE RAINBIRD VB-STD OR APPROVED EQUAL
ALL VALVE BOXES SHALL HAVE FILTER FABRIC AND 4" OF GRAVEL AT BASE

7 VALVE BOX (VB-STD)
NOT TO SCALE

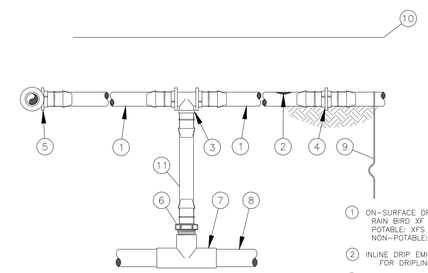

NOTES:
1. PLACE TIE DOWN STAKES EVERY THREE FEET IN SAND, FOUR FEET IN LOAM, AND FIVE FEET IN CLAY.
2. AT FITTINGS WHERE THERE IS A CHANGE OF DIRECTION SUCH AS TEES OR ELBOWS, USE TIE-DOWN STAKES ON EACH LEG OF THE CHANGE OF DIRECTION.
3. SAVE YOUR HANDS. USE THE RAIN BIRD FITTINS-TOOL XF INSERTION TOOL FOR FITTING ASSEMBLY.

1. ON-SURFACE DRIPLINE:
   RAIN BIRD XF SERIES DRIPLINE
   POTABLE: XFS DRIPLINE
   NON-POTABLE: XFSP DRIPLINE
2. INLINE DRIP EMITTER OUTLET, SEE PLANS FOR DRIPLINE OUTLET SPACING.
3. BARB TEE 17x17x17mm
   RAIN BIRD XFF-TEE
4. BARB COUPLING 17x17mm
   RAIN BIRD XFF-COUP
5. BARB ELBOW 17x17mm
   RAIN BIRD XFF-ELBOW
6. BARB MALE ADAPTER
   17mm X 1/2" RVT
   RAIN BIRD XFF-MA-050
   17mm X 3/4" RVT
   RAIN BIRD XFF-MA-075
7. PVC TEE SxSxT
8. PVC LATERAL SUPPLY HEADER
9. TIE DOWN STAKE:
   RAIN BIRD TDS-050 WITH BEND (TYPICAL)
10. MULCH
11. RAIN BIRD XF SERIES BLANK TUBING
    LENGTH AS REQUIRED

9 IRRIGATION SYSTEMS
SUB-HEADER INST. N.T.S.

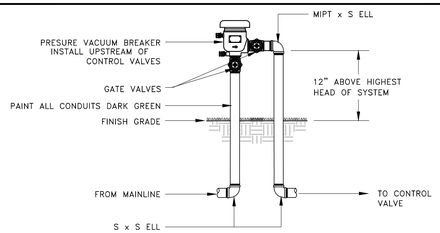

1 PRESSURE VACUUM BREAKER
NOT TO SCALE

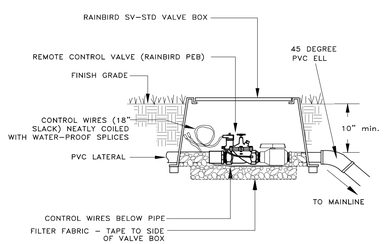

4 REMOTE CONTROL VALVE
NOT TO SCALE

ALL VALVE BOXES SHALL HAVE FILTER FABRIC AND 4" OF GRAVEL AT BASE

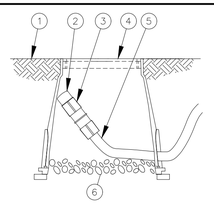

1. FINISH GRADE
2. FLUSH CAP FOR EASY FIT
   CORVRESSION FITTINGS:
   POTABLE:RAIN BIRD MDCFCAP
   NON-POTABLE: RAIN BIRD MDCFPCAP
3. EASY FIT COUPLING:
   RAIN BIRD MDCFCOUP
4. SUBTERRANEAN EMITTER BOX:
   RAIN BIRD SEB 7XB
5. SUB-SURFACE DRIPLINE:
   RAIN BIRD XF SERIES DRIPLINE
   POTABLE: XFS DRIPLINE
   NON-POTABLE: XFSP DRIPLINE
6. 3-INCH MINIMUM DEPTH OF 3/4-INCH WASHED GRAVEL WITH FILTER FABRICK AT BASE

NOTE:
1. ALLOW A MINIMUM OF 6-INCHES OF DRIPLINE TUBING IN VALVE BOX IN ORDER TO DIRECT FLUSHED WATER OUTSIDE VALVE BOX.

2 DRIPLINE
NOT TO SCALE

NOTES:
1. KBI OR LASSCO SWING JOINT
2. INSTALL PART CIRCLE POP-UP HEADS 6" FROM EDGE OF PAVED AREAS.

BUBBLER PIPING CHART

NUMBER OF BUBBLERS	SIZE OF PIPE
1 - 5	½"
6 - 10	¾"
11 - 20	1"
21 - 30	1 ¼"
31 - 40	1 ½"

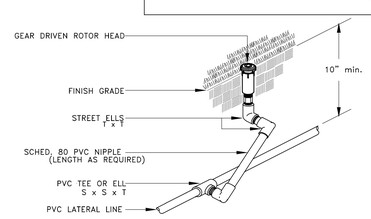

5 ROTOR POP-UP
NOT TO SCALE

NOTES:
1. INSTALL PART CIRCLE POP-UP HEADS 6" FROM EDGE OF PAVED AREAS, UNLESS OTHERWISE NOTED.

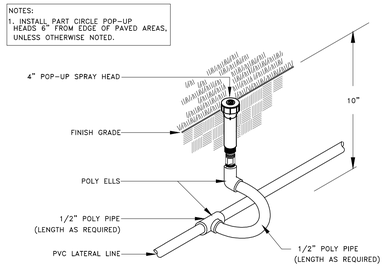

8 LAWN POP-UP HEAD
NOT TO SCALE

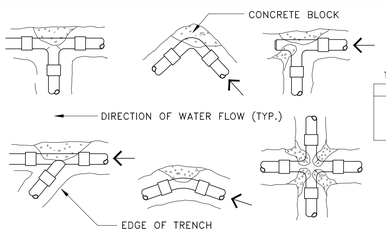

THRUST BLOCK BEARING AREA (SQ. FT.)

PIPE SIZE	1.25-2.5"	3"	4"	6"
TEES/ELLS	1.00	1.00	1.25	3.2
90 BENDS	1.00	1.25	2.00	4.5
45 BENDS	1.00	1.00	1.00	2.4

NOTE:
INSTALL THRUST BLOCK AT ALL MAINLINE BENDS, TEES OR ELLS AS SHOWN BELOW. THRUST BLOCKS SHALL BE MINIMUM OF (1) CU. FT. REDI-MIX CONCRETE OR 2500 PSI 28 DAY CONCRETE.

3 THRUST BLOCK DETAIL

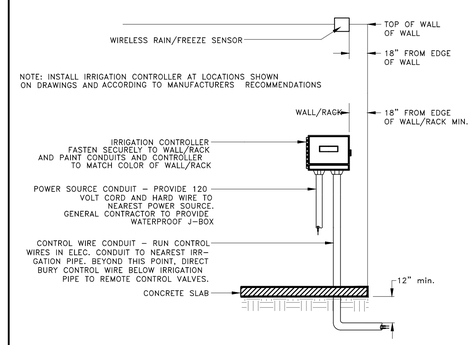

NOTE: INSTALL IRRIGATION CONTROLLER AT LOCATIONS SHOWN ON DRAWINGS AND ACCORDING TO MANUFACTURERS RECOMMENDATIONS

10 WALL/RACK MOUNTED CONTROLLER
NOT TO SCALE

SSP Design
789 EAST WASHINGTON STREET
BROWNSVILLE, TEXAS 78520
TELEPHONE (956) 547-9788
FAX (956) 547-9977
SPACEWARESPDESIGN.COM

No.	REVISIONS	BY

GMS ARCHITECTS
1150 paredes line rd.
brownsville
texas 78526
(956) 546-0110
fax (956) 546-0196

RFCSP-0819-NEHSSL

SAN BENITO CISD
ADDITIONS AND RENOVATIONS AT SAN BENITO HS AND
SULLIVAN ELEMENTARY
RFCSP-0819-NEHSSL

SAN BENITO TEXAS

STATE OF TEXAS
JOHN LAY WINGFIELD
851
LICENSED IRRIGATOR
8/2/19

COPYRIGHT 2017
GOMEZ MENDEZ SAENZ INC.
ARCHITECTS-PLANNERS

DATE	AUGUST 2, 2019
SCALE	As Shown
DRAWN	
JOB	S5001119
SHEET	L1.02

NOTE:

CONTRACTOR SHALL PROTECT EXISTING LANDSCAPE, IRRIGATION AND LAWNS. ANY DAMAGE CAUSED BY CONSTRUCTION ACTIVITY, LAY-DOWN/STORAGE AREAS, ETC. SHALL BE REPAIRED TO MATCH CONDITIONS PRIOR TO CONSTRUCTION. THIS MAY INCLUDE IRRIGATION REPAIRS, SODDING, SEEDING, PLANTING AND CLEANUP.

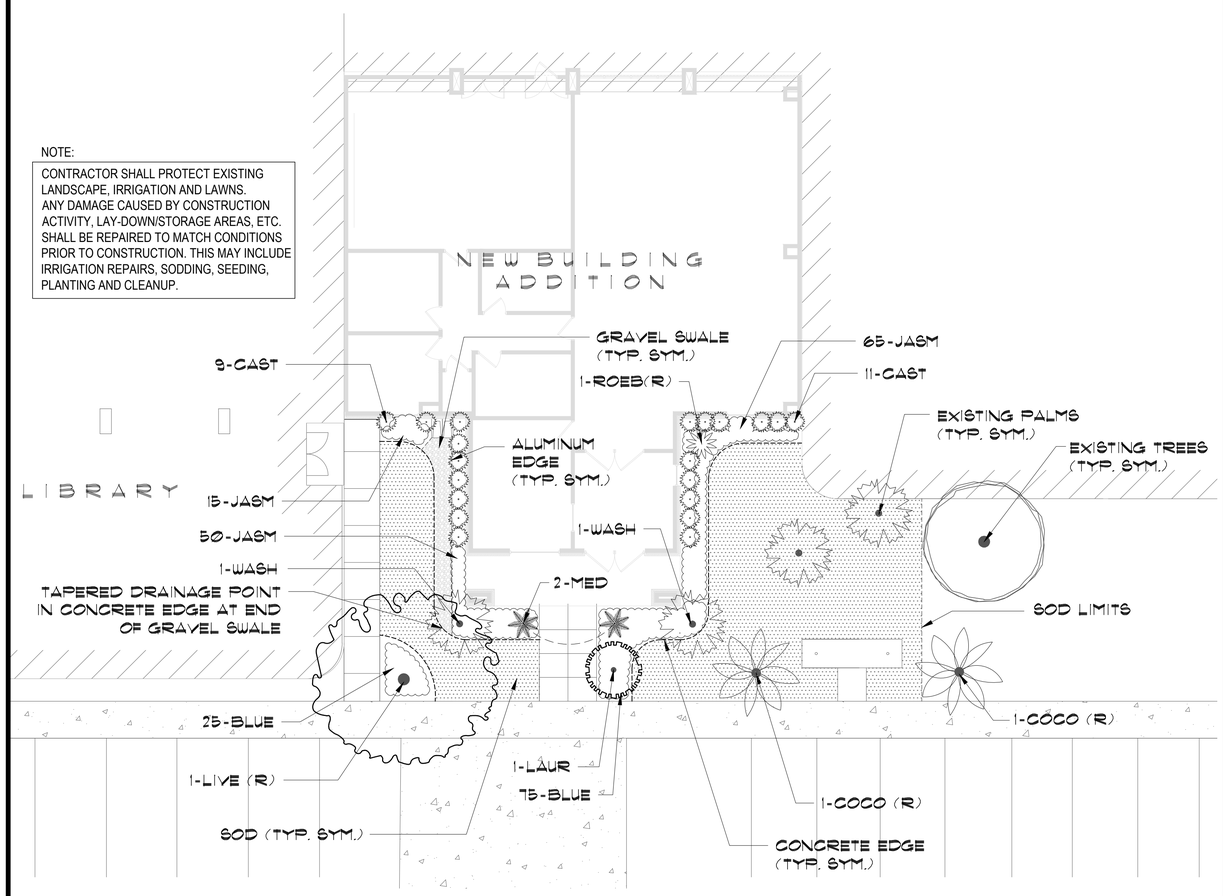

BID PACKAGE "A"

1 SAN BENITO HIGH SCHOOL LANDSCAPE PLAN

SCALE: 1"=10'-0"

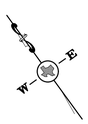

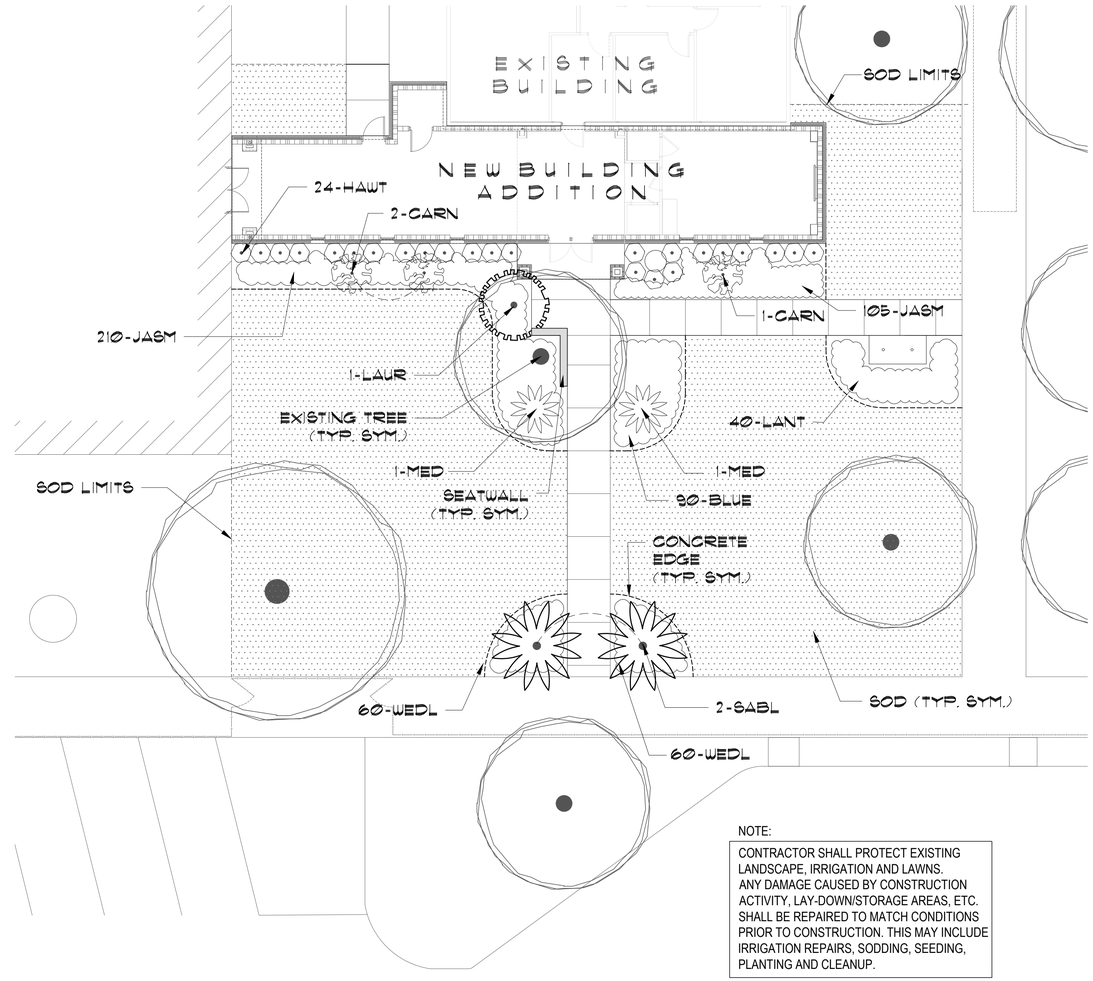

NOTE:

CONTRACTOR SHALL PROTECT EXISTING LANDSCAPE, IRRIGATION AND LAWNS. ANY DAMAGE CAUSED BY CONSTRUCTION ACTIVITY, LAY-DOWN/STORAGE AREAS, ETC. SHALL BE REPAIRED TO MATCH CONDITIONS PRIOR TO CONSTRUCTION. THIS MAY INCLUDE IRRIGATION REPAIRS, SODDING, SEEDING, PLANTING AND CLEANUP.

BID PACKAGE "B"

2 SAN BENITO SULLIVAN ELEMENTARY LANDSCAPE PLAN

SCALE: 1"=10'-0"

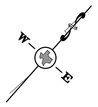

No.	REVISIONS	BY

GMS ARCHITECTS

1150 paredes line rd.
brownsville
texas 78526
(956) 546-0110
fax (956) 546-0196

RFCSP-0819-NEHSSL

SAN BENITO TO CISD
ADDITIONS AND RENOVATIONS AT SAN BENITO HS AND
SULLIVAN ELEMENTARY
RFCSP-0819-NEHSSL

SAN BENITO TEXAS

COPYRIGHT 2017
GOMEZ MENDEZ SAENZ INC.
ARCHITECTS·PLANNERS

DATE	AUGUST 2, 2019
SCALE	As Shown
DRAWN	
JOB	S5001119
SHEET	L2.01

PLANT SCHEDULE - SAN BENITO HIGH SCHOOL

CODE	BOTANICAL NAME	COMMON NAME	TYPE	SIZE	SPACING	QTY
	PALMS					
COCO(R)	SYAGRUS ROMANZ.	COCOS PALM (RELOCATED)	B/B	SEE SCHEDULE (SHEET L1.00)	A.S.	2
MED	CHAMAEROPS HUMILIS	MED. FAN PALM (TRIPLE)	B/B	12" TRUNK	A.S.	2
ROEB(R)	PHOENIX ROEBELINII	PYGMY DATE PALM (RELOCATED)	B/B	SEE SCHEDULE (SHEET L1.00)	A.S.	1
WASH	WASHINGTONIA ROBUSTA	MEXICAN FAN PALM	B/B	18-20' TRUNK HT.	A.S.	2
	TREES					
LAUR	SOPHORA SECUNDIFLORA	MOUNTAIN LAUREL (CONT. GRN)	24" BOX	MULTI-TRUNK - 6' HT	A.S.	1
LIVE (R)	QUERCUS VIRGINIANA	LIVE OAK (RELOCATED)	B/B	SEE SCHEDULE (SHEET L1.00)	A.S.	1
	SHRUBS					
CAST	ASPIDISTRA ELATIOR	CAST IRON PLANT	3 GAL	18"HT-BUSHY	A.S.	20
	GROUND COVERS					
RUELLIA SQUARROSA	RUELLIA SQUARROSA	BLUE SHADE RUELLIA	1 GAL	12"HT-BUSHY	12" O.C.	100
JASM	TRACH. ASIATICUM	ASIAN JASMINE	1 GAL		12" O.C.	130
	GRASS					
SOD	CYNODON DACTYLON	# 1 CERTIFIED '419' HYBRID BERMUDA SOD			150 S.Y.	

MATERIAL SCHEDULE - SAN BENITO HIGH SCHOOL

DESCRIPTION	NOTES	QUANTITY
PREMIUM COMPOST *	2" LAYER PREMIUM COMPOST (NINE KIDS COMPOST MIX)	25 C.Y.
SCREENED TOP SOIL	8" FOR ALL PLANTING BEDS	3 C.Y.
MULCH (HARDWOOD)	2" MIN. FOR ALL PLANTING BEDS AND WATERING BASINS (TEXAS NATIVES HARDWOOD)	45 (2 CF BAGS)
HERBICIDE	ALL PLANTING BED AREAS AS SPECIFIED	500 S.F.
FERTILIZER	ALL PLANT MATERIAL PER DETAILS	500 S.F.
PLANTING TABLETS	PER DETAILS / AS SPECIFIED	-
PRE-EMERGENT	ALL PLANTING BED AREAS AS SPECIFIED	-
GUYING / STAKING	ALL TREES/PALMS PER DETAILS	-
WASHED GRAVEL*	6" LAYER OF 1" TO 1 1/2" WASHED GRAVEL FOR SWALE AS PER PLANS	1 C.Y.
FILTER FABRIC	FABRISCAPES NON-WOVEN 4 OZ. FILTER FABRIC UNDER GRAVEL SWALE AS PER PLANS	90 S.F.
ALUMINUM EDGE	5" BLACK ANODIZED ALUMINUM EDGE 'DREAMSCAPES' PER PLANS/DETAIL	40 L.F.
CONCRETE EDGE	4 x 6" EXTRUDED COLORED CONCRETE EDGING PER PLANS/DETAILS	120 L.F.
TREE TRIM/PRUNE	TREE TRIMMING/PRUNING BY ISA CERTIFIED ARBORIST	-
TREE PROTECTION	TREE PROTECTION FENCING AS PER PLANS/DETAILS	-
IRRIGATION SYSTEM	CORVLETE AUTOMATIC IRRIGATION SYSTEM BY LICENSED CONTR.	-

NOTE: CONTRACTORS MUST REVIEW TECHNICAL SPECIFICATIONS FOR ADDITIONAL PRODUCT INFORMATION AND PROJECT REQUIREMENTS.

* NINE KIDS COMPOST (956) 432-4983 OR CITY OF MCALLEN COMPOST (956) 681-4000

PLANT SCHEDULE - SULLIVAN ELEMENTARY

CODE	BOTANICAL NAME	COMMON NAME	TYPE	SIZE	SPACING	QTY
	PALMS					
MED	CHAMAEROPS HUMILIS	MED. FAN PALM (TRIPLE)	B/B	12" TRUNK	A.S.	2
SABL	SABAL TEXANA	TEXAS SABAL PALM	B/B	6-8' TRUNK HT.	A.S.	2
	TREES					
LAUR	SOPHORA SECUNDIFLORA	MOUNTAIN LAUREL (CONT. GRN)	24" BOX	MULTI-TRUNK - 6' HT	A.S.	1
	SHRUBS					
CARN	TABERNAEMONTANA DIVARICATA	INDIAN CARNATION	10 GAL	24"HT-BUSHY	A.S.	3
HAWT	RAPHIOLEPIS INDICA	INDIAN HAWTHORNE 'CLARA'	3 GAL	18"HT-BUSHY	A.S.	24
	GROUND COVERS					
BLUE	RUELLIA SQUARROSA	BLUE SHADE RUELLIA	1 GAL	12"HT-BUSHY	12" O.C.	90
JASM	TRACH. ASIATICUM	ASIAN JASMINE	1 GAL		12" O.C.	315
LANT	LANTANA CAMARA 'RED SPREAD'	'RED SPREAD' LANTANA	1 GAL	12"HT-BUSHY	12" O.C.	40
WEDL	WEDELIA TRILOBATA	WEDELIA	4" POTS		12" O.C.	120
	GRASS					
SOD	CYNODON DACTYLON	# 1 CERTIFIED '419' HYBRID BERMUDA SOD			535 S.Y.	

MATERIAL SCHEDULE - SULLIVAN ELEMENTARY

DESCRIPTION	NOTES	QUANTITY
PREMIUM COMPOST *	2" LAYER PREMIUM COMPOST (NINE KIDS COMPOST MIX)	7 C.Y.
SCREENED TOP SOIL	8" FOR ALL PLANTING BEDS	30 C.Y.
MULCH (HARDWOOD)	2" MIN. FOR ALL PLANTING BEDS AND WATERING BASINS (TEXAS NATIVES HARDWOOD)	108 (2 CF BAGS)
HERBICIDE	ALL PLANTING BED AREAS AS SPECIFIED	1,200 S.F.
FERTILIZER	ALL PLANT MATERIAL PER DETAILS	1,200 S.F.
PLANTING TABLETS	PER DETAILS / AS SPECIFIED	-
PRE-EMERGENT	ALL PLANTING BED AREAS AS SPECIFIED	-
GUYING / STAKING	ALL TREES/PALMS PER DETAILS	-
CONCRETE EDGE	4 x 6" EXTRUDED COLORED CONCRETE EDGING PER PLANS/DETAILS	170 L.F.
SEATWALL	PAVESTONE ANCHOR HIGHLANDSTONE FREESTANDING WALL WITH CAP #824 (SAN MARCOS BLEND)	15 L.F.
TREE TRIM/PRUNE	TREE TRIMMING/PRUNING BY ISA CERTIFIED ARBORIST	-
TREE PROTECTION	TREE PROTECTION FENCING AS PER PLANS/DETAILS	-
IRRIGATION SYSTEM	CORVLETE AUTOMATIC IRRIGATION SYSTEM BY LICENSED CONTR.	-

NOTE: CONTRACTORS MUST REVIEW TECHNICAL SPECIFICATIONS FOR ADDITIONAL PRODUCT INFORMATION AND PROJECT REQUIREMENTS.

* NINE KIDS COMPOST (956) 432-4983 OR CITY OF MCALLEN COMPOST (956) 681-4000

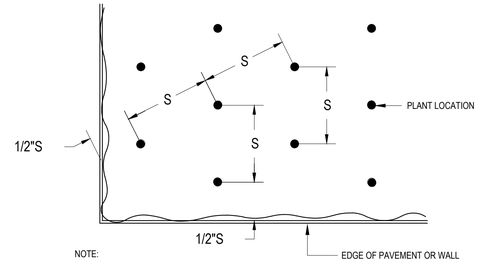

NOTE:

1. S = SPACING, (REFER PLANT LIST FOR AMOUNT OF SPACING.)
2. USE SPACING LAYOUT FOR SHRUBS, GROUNDCOVERS AND ANNUALS.

1 TRIANGULAR PLANT SPACING DIAGRAM

NOT TO SCALE

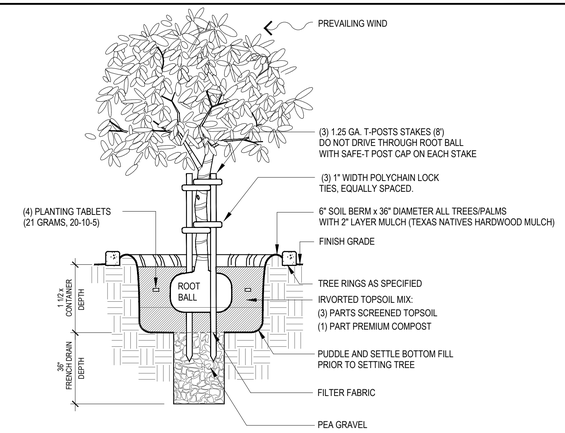

2 TREE PLANTING DETAIL

NOT TO SCALE

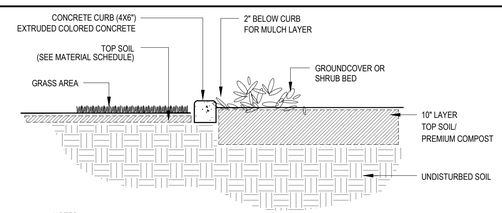

NOTES:

1. CONCRETE CURBING TO HAVE 1 1/2" DEEP CONTRACTION JOINTS @ 5'-0" SPACING.
2. CONCRTE CURBING TO HAVE TAPERED DRAINAGE POINTS AT 10' O.C.
3. 2500-3000 PSI CORVRESSIVE STRENGTH, 490 PSI FLEXURAL STRENGTH.
4. USE HALF-INCH POLYPROPYLENE FIBER REINFORCEMENT.
5. NATURAL FINISH AND COLOR.
6. EQUAL TO 'CURB APPEAL' EDGING (956-867-8350).

3 CONCRETE EDGE DETAIL

NOT TO SCALE

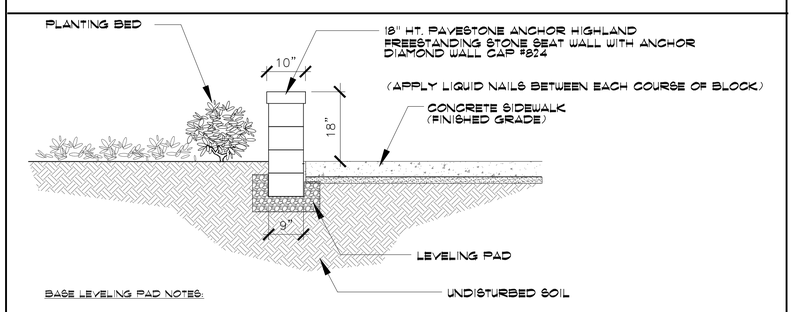

BASE LEVELING PAD NOTES:

1. THE LEVELING PAD IS TO BE CONSTRUCTED OF CRUSHED STONE OR LEVELING SAND

4 SEAT WALL DETAIL

NOT TO SCALE

LANDSCAPE CONSTRUCTION NOTES

1. WORK UNDER THIS CONTRACT INCLUDES SITE REVIEW AND COORDINATION WITH EXISTING CONDITIONS, SITE CLEANUP, EXCAVATION, BED PREP, TILLING, EDGING, IRRIGATION, PLANTING, STAKING, MAINTENANCE, AND GUARANTEE.
2. LANDSCAPE CONTRACTOR SHALL FIELD VERIFY ALL QUANTITIES AND DIMENSIONS PRIOR TO BIDDING. QUANTITIES SHOWN IN SCHEDULE ARE FOR CONVENIENCE ONLY.
3. NOTIFY SSP DESIGN PRIOR TO BID OF ANY DISCREPANCIES IN DRAWINGS/DETAILS OR INSUFFICIENT QUANTITIES DUE TO DIFFERENCES IN PLAN AND ACTUAL FIELD CONDITIONS.
4. LANDSCAPE CONTRACTOR SHALL BE RESPONSIBLE FOR LOCATING AND PROTECTING ALL EXISTING UTILITIES. SPOTTING OF ALL UTILITIES IS REQUIRED.
5. NOTIFY AND MEET WITH SSP DESIGN PRIOR TO ANY CONSTRUCTION FOR VERIFICATION/INTERPRETATION OF PLANS.
6. LANDSCAPE CONTRACTOR SHALL VERIFY ALL PROPERTY BOUNDARIES AND LIMITS OF WORK WITH GENERAL CONTRACTOR/CIVIL ENGINEER. DO NOT BEGIN LANDSCAPE CONSTRUCTION UNTIL ALL BOUNDARIES, EASEMENTS AND RIGHTS-OF-WAY HAVE BEEN VERIFIED IN THE FIELD.
7. LANDSCAPE CONTRACTOR SHALL STAKE OUT ALL BEDS, TREES, PALM LOCATIONS PRIOR TO INSTALLATION FOR APPROVAL BY SSP DESIGN.
8. LANDSCAPE CONTRACTOR TO COORDINATE WITH SSP DESIGN TO ENSURE PROPER PLACEMENT OF PLANT MATERIAL AND IRRIGATION EQUIPMENT.
9. LANDSCAPE CONTRACTOR TO INSTALL EXTRUDED CONCRETE EDGING AS SHOWN ON PLANS.
10. LANDSCAPE CONTRACTOR TO SUPPLY/INSTALL 36" DIA. TREE RINGS AS SHOWN ON PLANS/DETAILS.
11. NOTIFY SSP DESIGN PRIOR TO PLANTING OPERATIONS FOR APPROVAL OF ALL PLANT MATERIAL ON SITE. ANY PLANT MATERIAL NOT APPROVED BY SSP DESIGN WILL BE SUBJECT TO REJECTION.
12. IRRIGATION CONTRACTOR SHALL SUPPLY AND INSTALL CORVLETE AUTOMATIC IRRIGATION SYSTEM. MAINLINE, SLEEVES, LATERALS, AND POP-UP HEADS, AND ADJUSTMENTS TO COVER ALL LANDSCAPE AREAS AS PER PLANS/DETAILS. IRRIGATION SYSTEM SHALL BE INSTALLED BY A TEXAS LICENSED IRRIGATOR ONLY.
13. LANDSCAPE CONTRACTOR SHALL REMOVE ALL EXISTING GRASS/WEEDS BY HERBICIDING PRIOR TO BED PREP AND SOIL REPLACEMENT.
14. LANDSCAPE CONTRACTOR SHALL REMOVE 12" OF EXST'G SOIL WITHIN ALL BED AREAS AND REPLACE WITH IRVORTED TOP SOIL/PREMIUM COMPOST MIX.
15. LANDSCAPE CONTRACTOR SHALL CONSTRUCT 6"X36" WATERING BASINS AROUND ALL TREES/PALMS WITH A MIN. 2" LAYER OF CYPRESS MULCH.
16. LANDSCAPE CONTRACTOR SHALL LOOSEN / GRADE ALL LAWN AREAS PRIOR TO HYDRO-MULCHING/SODDING TO ENSURE PROPER DRAINAGE AND UNIFORM SURFACE.
17. LANDSCAPE CONTRACTOR SHALL REMOVE ALL EXISTING GRASS AND WEEDS BY HERBICIDING, DISKING, FLOATING AND LIGHT GRADING OF ENTIRE PROJECT AREA PRIOR TO SODDING/HYDROMULCHING.
18. LANDSCAPE CONTRACTOR SHALL ESTABLISH AND MAINTAIN ALL PLANT MATERIAL FOR 90 DAYS AFTER 'SUBSTANTIAL CORVLETION' AND SHALL GUARANTEE ALL TREES/PALMS FOR A PERIOD OF ONE YEAR.
19. IRRIGATION CONTRACTOR SHALL GUARANTEE ALL SYSTEM CORVONENTS FOR A PERIOD OF ONE YEAR.
20. SEE SPECIFICATIONS FOR FURTHER INSTRUCTIONS/REQUIREMENTS.

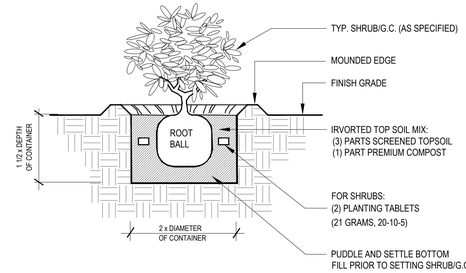

5 SHRUB/G.C. PLANTING DETAIL

NOT TO SCALE

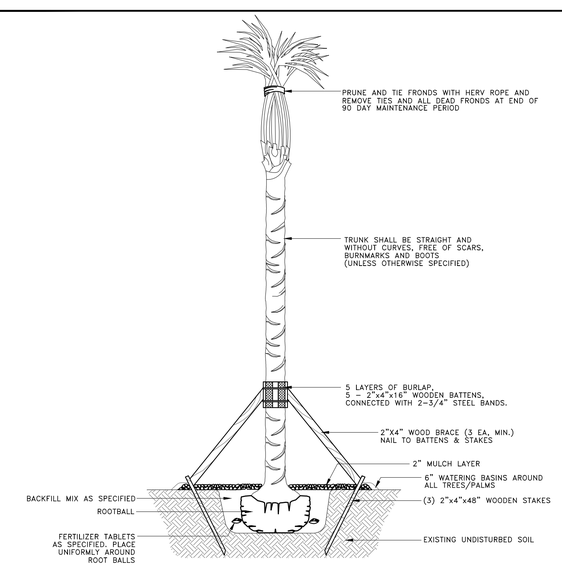

NOTE:
CONTRACTOR TO STAKE ALL PALMS PER THIS DETAIL UNLESS OTHERWISE NOTED.

6 PALM PLANTING DETAIL

NOT TO SCALE

No.	REVISIONS	BY

GMS ARCHITECTS
1150 paredes line rd.
brownsville
texas 78526
(956) 546-0110
fax (956) 546-0196

RFCSP-0819-NEHSSL

SAN BENITO CISD
ADDITIONS AND RENOVATIONS AT SAN BENITO HS AND
SULLIVAN ELEMENTARY
RFCSP-0819-NEHSSL

SAN BENITO TEXAS

COPYRIGHT 2017
GOMEZ MENDEZ SAENZ INC.
ARCHITECTS-PLANNERS

DATE	AUGUST 2, 2019
SCALE	As Shown
DRAWN	
JOB	SS001119
SHEET	L2.02

SSP Design
SITE PLANNING
LANDSCAPE DESIGN
789 E. WASHINGTON ST.
BROWNSVILLE, TX 78575
TEL (956) 547-9788
FAX (956) 547-9977
www.sspdesign.com

4.2 SPACE ALLOWANCES AND REACH RANGES

TAS SECTIONS 4.2.1 – WHEELCHAIR PASSAGE WIDTH

A. The minimum clear width for single wheelchair passage shall be 32" at a point and 36" continuously

TAS SECTIONS 4.2.2 – WIDTH FOR WHEELCHAIR PASSING

A. The minimum clear width for two wheelchairs to pass is 60"

TAS SECTIONS 4.2.4.1 – SIZE AND APPROACH

A. Minimum clear floor space for a wheelchair and occupant shall be 30" wide x 48" long. Clear floor space shall be centered on the element it serves.

4.3 ACCESSIBLE ROUTE

TAS SECTIONS 4.3.2 – LOCATION

A. At least one accessible route shall be provided from public transportation stops, accessible parking and loading zones, and public streets or sidewalks to the accessible building entrance.

TAS SECTIONS 4.3.3 – WIDTH

A. The minimum clear width of an accessible route shall be 36" except at doors.

TAS SECTIONS 4.3.4 – PASSING SPACE

A. If an accessible route is less than 60" in width, then passing spaces of at least 60"x60" shall be provided at 200' max. spacing.

TAS SECTIONS 4.3.5 – HEAD ROOM

A. Accessible routes shall have 80" min. clear head room.

TAS SECTIONS 4.3.7 – SLOPE

A. Running slope shall not exceed 1:20. (If slope exceeds 1:20, refer to section 4.8)
B. Cross slope shall not exceed 1:50

4.4 PROTRUDING OBJECTS (REFERENCE DETAIL 4.4.1 & 4.4.2)

TAS SECTIONS 4.4.1 – GENERAL

A. Objects projecting from walls (for example, telephones) with their leading edges between 27"–80" above the finished floor shall protrude no more than 4" into walks, halls, corridors, passageways, or aisles. Objects mounted with their leading edges at or below 27" above the finished floor may protrude any amount. Free-standing objects mounted on posts or pylons may overhang 12" maximum from 27"–80" above the ground or finished floor. Protruding objects shall not reduce the clear width of an accessible route or maneuvering space.

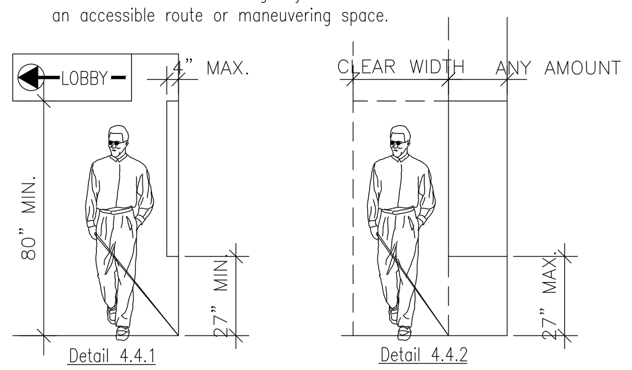

Detail 4.4.1 Detail 4.4.2

4.5 GROUND AND FLOOR SURFACES

TAS SECTIONS 4.5.2 – CHANGES IN LEVEL (REFERENCE DETAIL 5.1)

A. Changes in level up to 1/4" may be verticle and without edge treatment
B. Changes in level between 1/4" and 1/2" shall be beveled with a slope no greater than 1:2.

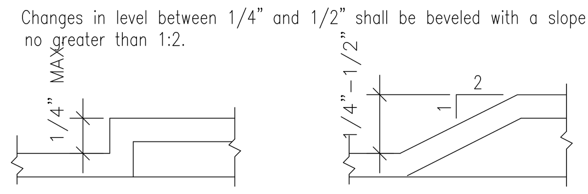

Detail 5.1

TAS SECTIONS 4.5.3 – CARPET

A. Carpet provided on a floor surface shall be securely attached; have a firm pad or backing, or no pad; and have a level loop, textured loop, level cut pile, or level cut/uncut pile texture. Maximum pile thickness shall be 1/2". Exposed edges of carpet shall be fastened to floor surfaces and have trim along the exposed edges.

TAS SECTIONS 4.5.4 – GRATINGS

A. If gratings are located in walking surfaces or along accessible routes, then they shall have spaces no greater than 1/2" wide in one direction.
B. If gratings have elongated openings, then they shall be placed so that the long dimension is perpendicular to the dominant direction of travel.

4.6 PARKING AND PASSENGER LOADING ZONES

TAS SECTIONS 4.6.3 – PARKING SPACES

A. Accessible parking shall be at least 96" wide.
B. Parking access aisles shall be 60" wide.
Van accessible access aisles shal be 96" wide.
C. Surface slope shall not exceed 1:50 in all directions
(Note : no built up curb ramp may be located in an accessible parking access aisle.)

TAS SECTIONS 4.6.4 – SIGNAGE

A. Each accessible parking space must have individual verticallly mounted or suspended sign. Required van accessible spaces must be designated.
A. Characters and symbols on such signs shall be located 60" minimum above the ground.
B. Signage located within an accessible route shall be located 80" min. above the walking surface.

TAS SECTIONS 4.6.5 – VERTICAL CLEARANCE

A. Provide minimum verticle clearance of 114" at accessible passenger loading zones and along at least one vehicle access route from site entrances and exits.

TAS SECTIONS 4.6.6 – PASSENGER LOADING ZONE

A. Passenger loading zones shall provide an access aisle at least 60" wide and 20 ft long adjacent and parallel to the vehicle pull-up space. If there are curbs between the access aisle and the vehicle pull-up space, then a curb ramp complying with 4.7 shall be provided. Vehicle standing spaces and access aisles shall be level with surface slopes not exceeding 1:50 in all directions.

4.7 CURB RAMPS

TAS SECTIONS 4.7.2 – SLOPE (REFERENCE DETAIL 4.7)

A. Slopes of curb ramps shall comply with 4.8.2.
B. Maximum slopes of adjoining gutters, road surface immediately adjacent to the curb ramp, or accessible route shall not exceed 1:20.

TAS SECTIONS 4.7.3 – WIDTH (REFERENCE DETAIL 4.7)

A. The minimum width of a curb ramp shall be 36", exclusive of flared sides.

TAS SECTIONS 4.7.5 – SIDES OF CURB RAMPS (REFERENCE DETAIL 4.7)

A. If a curb ramp is located where pedestrians must walk across the ramp or where it is not protected by handrails or guardrails, it shall have flared sides; the maximum slope of the flare shall be 1:10

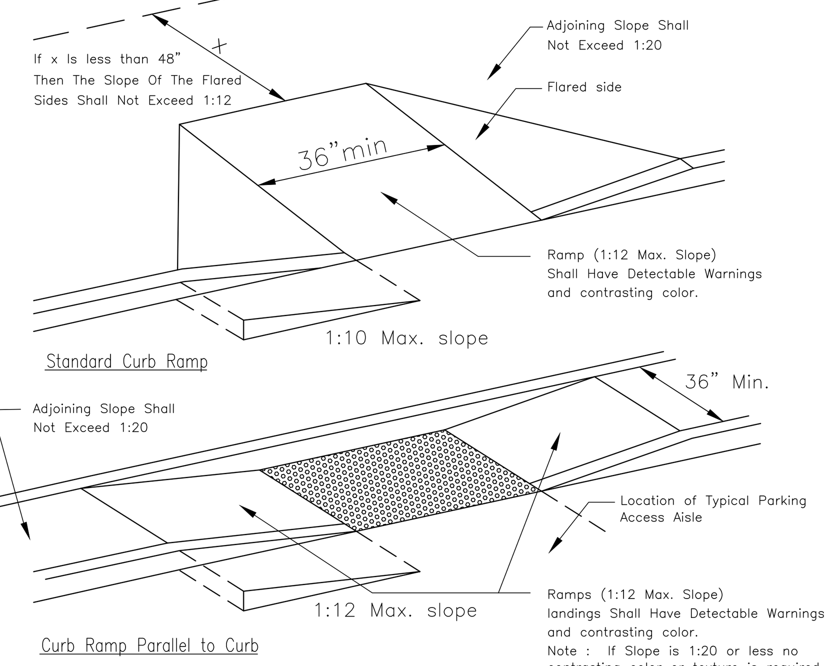

Detail 4.7

TAS SECTIONS 4.7.10 – DIAGONAL CURB RAMPS

A. If diagonal curb ramps have returned curbs or other well-defined edges, such edges shall be parallel to the direction of pedestrian flow. The bottom of diagonal curb ramps shall have 48" minimum clear space. If diagonal curb ramps are provided at marked crossings, the 48" clear space shall be within the markings. If diagonal curb ramps have flared sides, they shall also have at least a 24" long segment of straight curb located on each side of the curb ramp and within the marked crossing.

TAS SECTIONS 4.7.11 – ISLANDS

A. Any raised islands in crossings shall be cut through level with the street or curb ramps at both sides and a level area at least 48" long between the curb ramps in the part of the island intersected by the crossings.

4.8 RAMPS

TAS SECTIONS 4.8.1 – GENERAL

A. Any part of an accessible route with a slope greater than 1:20 shall be considered a ramp and shall comply with 4.8

TAS SECTIONS 4.8.2 – SLOPE AND RISE

A. The least possible slope shall be used for any ramp. The maximum slope of a ramp in new construction shall be 1:12. The maximum rise for any run shall be 30".

TAS SECTIONS 4.8.3 – CLEAR WIDTH

A. The minimum clear width of a ramp 30 ft or less in length shall be 36". Ramps more than 30 ft. in length shall have a minimum clear width of 44".

TAS SECTION 4.8.4 – LANDINGS

A. Level landings required at top and bottom of each run, with the following features:
1. Minimum Width: Equal to width of ramp
2. Length: Minumum 60" clear
3. At change of direction landing shal be 60" x 60" min.

TAS SECTIONS 4.8.5 – HANDRAILS

A. Handrails are required at all ramps with > 6" rise.
B. Height: 34–38" above ramp surface
C. The clear space between the handrail and the wall shall be 1–1/2".

TAS SECTIONS 4.8.7 – EDGE PROTECTION

A. Ramps and landings with drop offs shall have curbs, walls, railings, or projecting surfaces that prevent slipping off the ramp. Curbs shall be a minimum of 2" high.

4.9 STAIRS

TAS SECTIONS 4.9.2 – TREADS AND RISERS

A. All steps on a flight of stairs shall have uniform riser heights and tread widths
1. Minimum tread depth shall be 11", measured from riser to riser (not including nosing)
2. Open risers are not permitted

TAS SECTIONS 4.9.4 – HANDRAILS

A. Non-continuous handrails shall extend 12" beyond the top riser and 12" plus the width of one tread beyond the bottom riser. At the top, the extension shall be parallel to the floor. At the bottom, the handrail shall continue to slope for a distance of one tread width (11"); the remaining extension shall be horizontal.

B. Height: 34" – 38", measured from the stair nosing.

4.10 ELEVATORS

TAS SECTIONS 4.10.3 – HALL CALL BUTTONS

A. Shall be centered 42" above floor

TAS SECTIONS 4.10.4 – HALL LANTERNS

A. Visible signals shall have the following features:
1. Fixtures shall be mounted with centerline at least 72" above the lobby floor
2. Visual elements shall be at least 2-1/2" in the smallest dimension

TAS SECTIONS 4.10.5 – RAISED AND BRAILLE CHARACTERS ON HOISTWAY ENTRANCES

A. All elevator hoistway entrances shall have raised and Braille floor no. designations provided on both jambs. Centerline of the characters shall be 60" above the floor. Characters shall be 2" high.

TAS SECTIONS 4.10.6 – DOOR PROTECTIVE AND REOPENING DEVICE

A. Elevator doors shall open and close automatically. They shall be provided with a reopening device that will stop and reopen a car door and hoistway door automatically if the door becomes obstructed by an object or person.

TAS SECTIONS 4.10.12 – CAR CONTROLS

A. All floor buttons shall be:
1. All control buttons shall be at least 3/4" in their smallest dim. They shall be flush or raised.
2. All control buttons shall be designated by Braille and by raised standard alphabet characters for letters, arabic characters for numerals. The call button for the main entry floor shall be designated by a raised star at the left of the floor designation.
3. Maximum 54" above floor where side approach is provided
4. Maximum 48" where forward approach is provided

B. Emergency Controls:
1. Shall have centerlines 35" minimum above floor
2. Shall be grouped at bottom of panel

C. The emergency communication system shall not require voice communication.

4.11 PLATFORM LIFTS

NOTE : REQUIRES A VARIANCE FROM THE T.D.L.R. TO USE IN LIEU OF AN ELEVATOR

TAS SECTIONS 4.11.2, 4.27.3 – OTHER REQUIREMENTS CONTROLS AND OPERATING SYSTEMS

A. Heights permitted:
Controls and operating mechanisms shall be located for either a forward or side approach from any direction of travel. They shall be located 28" min. and 48" maximum above the floor. They shall be operable with one hand. There shall be at least one handrail complying with 4.26. Wheelstops and guardrails shall be provided where necessary.

4.13 DOORS

TAS SECTION 4.13.4 – DOUBLE – LEAF DOORWAYS

A. Doorways with two independently operated leaves shall have at least one active leaf that meets the requirements in 4.13.5 and 4.13.6.

TAS SECTIONS 4.13.5 – CLEAR WIDTH

A. Doorways shall provide a clear opening of 32" minimum, with the door open 90°.
1. Clear opening shall be measured between the face of the door and opposite stop.
2. Openings more than 24" in depth shall provide a clear opening of 36" minimum.
Exception: Doors not requiring full user passage, such as shallow closets, shall have a clear opening of 20" minimum.

TAS SECTION 4.13.6 – MANEUVERING CLEARANCES AT DOORS

Provide level (1:50 max. slope) and clear maueuvering area at doors as follows:
A. Front approach pull side – 60" min. width & 18" min. beside strike edge
Front approach push side – 48" min width & 0" beside strike edge (12" @ strike if door has both a closer and a latch)
B. Hinge side approach pull side – 60" min. width; 36" min. beside strike edge or – 54" min. width; 42" min. beside strike edge
Hinge side approach push side – 42" min. width & 18" min. bside hinge edge (48"min. width if door has both a closer and a latch)
C. Latch side approach pull side – 48" min. width and 24" min. beside strike edge (54"min. width if door has a closer)
Latch side approach push side – 42" min. width and 24" min. beside strike edge (48"min. width if door has a closer)

TAS SECTION 4.13.8 – THRESHOLDS AT DOORWAYS

A. Maximum threshold height: 1/2" (3/4" at exterior sliding doors). Raised thresholds and floor level changes shall be beveled with a slope no greater than 1:2.

TAS SECTION 4.13.9 – DOOR HARDWARE

A. Handles, pulls, latches, locks, and other operating devices shall have a shape that is easy to grasp with one hand and does not require tight grasping, tight pinching, or twisting of the wrist to operate.
1. Lever-operated mechanisms, push-type mechanisms, and U-shaped handles are acceptable designs.
2. When sliding doors are fully open, operating hardware shall be exposed and usable from both sides.
3. Hardware required for accessibel door passage shall be mounted no higher than 48" above finished floor.

TAS SECTION 4.13.10 – DOOR CLOSERS

A. If a door has a closer, then the sweep period of the closer shall be adjusted so that from an open position of 70°, the door will take at least 3 seconds to move to a point 3" from the latch, measured to the leading edge of the door.

TAS SECTION 4.13.11 – DOOR OPENING FORCE

A. The maximum force for pushing or pulling open a door shall be as follows:
1. Fire doors shall have the minimum opening force allowable by the appropriate administrative authority.
2. Other doors
a. Exterior hinged doors: no requirement.
b. Interior hinged doors: 5.0 lbf.
c. Sliding or folding doors: 5.0 lbf.
These forces do not apply to the force required to retract latch bolts or disengage othe devices that may hold the door in a closed position.

4.15 DRINKING FOUNTAINS

TAS SECTIONS 4.15.2 – SPOUT HEIGHT (REFERENCE DETAIL 4.15 for accessible unit)

A. Accessible spouts shall be no higher than 36", measured from the floor or ground surface to the spout outlet.
B. In addition to accessible unit, at least one drinking fountain shall be at standard height (may be "high/low" type if located in one location).

TAS SECTIONS 4.15.3 – SPOUT LOCATION

A. Spouts shall be located at the front of the unit and shall direct the water flow in a trajectory that is parallel or nearly parallel to the front of the unit.
1. The spout shall provide a flow of water at least 4" high.
2. If the fountain has a round or oval bowl, the spout must be positioned so the flow of water is within 3" of the front edge of the fountain.

TAS SECTIONS 4.15.4 – CONTROLS

A. Unit controls shall be front mounted or side mounted near the front edge.

TAS SECTIONS 4.15.5 – CLEARANCES (REFERENCE DETAIL 4.15).

A. Wall and post mounted cantilever fountains shall have clear knee space as follows:
1. Minimum 27" high (from apron bottom to floor) minimum 30" wide, and 17" – 19" deep.
2. A minimum 30" by 48" clear floor space allowing a forward approach to the unit shall be provided.

B. Free standing or built-in units not having a clear knee space shall have a minimum 30" by 48" clear floor space allowing a parallel approach to the unit.

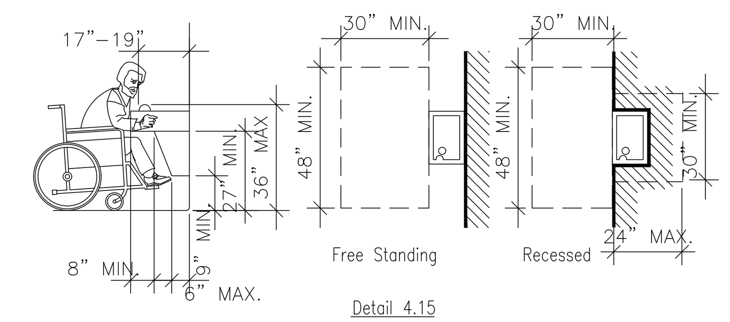

Detail 4.15

4.16 WATER CLOSETS

TAS SECTION 4.16.2 – CLEAR FLOOR SPACE

A. Clear floor space for water closets not in stalls shall be provided as follows:
Front approach – 48" min. wide x 66" min. long
Side approach – 56" min. to front of toilet x 48" min. wide
Both approach – 60" min. wide x 56" min. long (Reference Detail 4.16)

B. No doorswings are allowed in clear floor area.

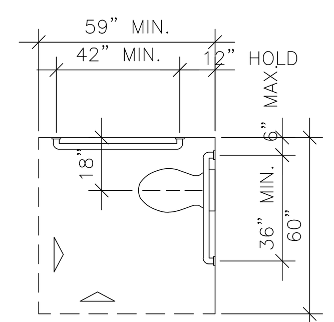

Detail 4.16

TAS SECTION 4.16.3 – HEIGHT (REFERENCE DETAIL 4.16.2)

A. The height to the top of the toilet seat shall be 17" – 19" above floor.
1. Seats shall not be sprung to return to a lifted position.

TAS SECTIONS 4.16.4, 4.26 – GRAB BARS (REFERENCE DETAILS 4.16.1, 4.16.2 & 4.16.3)

A. For water closets not located in toilet stalls, the following grab bars shall be provided, 33" – 36" above the finish floor:
1. Side wall: 42" long minimum, hold 12" min. from back wall.
2. Back wall: 36" long minimum, 12" minimum each side of water closet centerline.

Refer to 4.26 Grab Bars for size and structural elements.

TAS SECTIONS 4.16.5, 4.27.4 – FLUSH CONTROLS (REFERENCE DETAIL 4.16.3)

A. Controls shall be 44" maximum above the finish floor.
1. Lever controls or flush valves shall be mounted on the wide side of toilet areas.
2. Controls shall be hand operated or automatic.
3. Controls shall be operable with one hand and shall not require tight grasping, pinching, or twisting of the wrist.
4. The force required to activate controls shall be no greater than 5lbf.

TAS SECTIONS 4.16.6 – DISPENSERS (REFERENCE DETAIL 4.16.2)

A. Toilet paper dispensers shall be installed on the side wall, a minimum 19" above the floor, and a maximum 36" from the rear wall.
1. Dispensers that control delivery or do not permit continuous paper flow shall not be used.

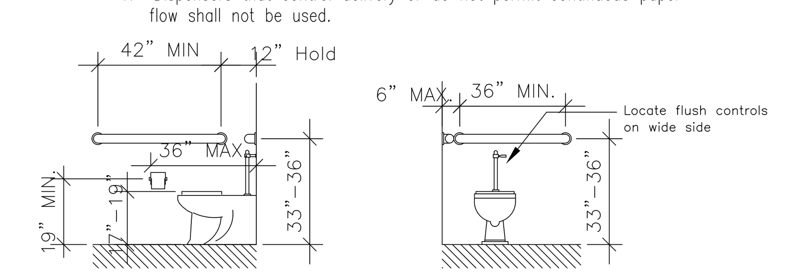

Detail 4.16.2 Detail 4.16.3

4.17 TOILET STALLS

TAS SECTION 4.22.4 – WHERE APPLICABLE

A. If toilet stalls are provided in a toilet room or bathroom, then at least one shall be a "standard" accessible toilet stall (for wheelchair users) complying with this section. (REFERENCE DETAIL 4.17.1)

B. If 6 or more toilet stalls are provided in a toilet room or bathroom in addition to the "standard" accessible stall required; an additional "alternate A" accessible stall 36" wide (for ambulatory persons with disabilities) complying with this section shall be provided. (REFERENCE DETAIL 4.17.2)

C. Alterations/Existing Conditions: In alteration work where provision of a "standard" accessible stall is technically infeasible, or where plumbing code requirements prevent combining existing stalls to provide space, either "alternate" stall (A or B) complying with this section may be provided in lieu of the standard stall. (Note :requires a variance from T.D.L.R.)

TAS SECTION 4.17.3 – SIZE AND ARRANGEMENT (REFERENCE DETAIL 4.17)

A. Toilet stalls may be arranged to provide either a left or a right handed approach. Accessible toilet stalls shall have the following dimensions:
1. "Standard" Accessible Stall
60" minimum width.
59" minimum depth, with floor mounted water closet
56" minimum depth, with wall mounted water closet
Door: outward swinging (if door swings into stall, depth shall be increased by 36". Stall doors must have 18" on pull strike jamb.
2. "Alternate A" Accessible Stall (required when more than 6 stalls provided, permitted in lieu of standard stall only with a variance from T.D.L.R.)
36" width – hold this dim.
69" minimum depth, with floor mounted water closet.
66" minimum depth with wall mounted water closet
Door: outward swinging.
3. "Alternate B" Accessible Stall (permitted in lieu of standard stall only with variance from T.D.L.R.)
48" minimum width.
54" minimum depth.
Door : outward swinging.

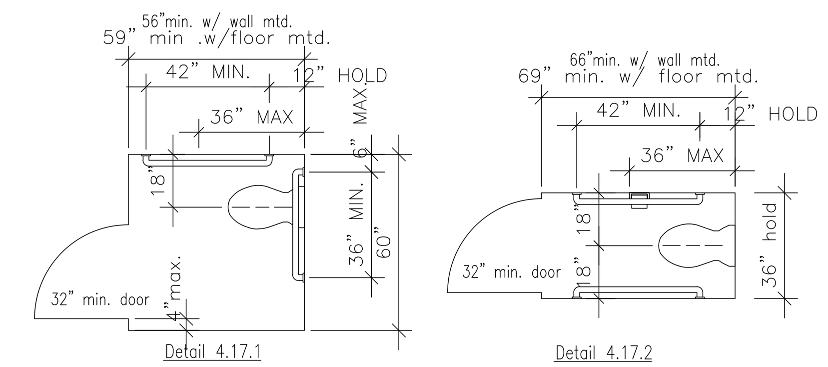

Detail 4.17.1 Detail 4.17.2

TAS SECTION 4.17.4 – TOE CLEARANCES

A. In "Standard" accessible stalls, the front partition and at least one side partition shall provide a toe clearance of at least 9" above the floor.

B. If the depth of the stall is greater than 60", the toe clearance is not required.

TAS SECTION 4.17.5 – DOORS

A. Toilet stall doors, including hardware, shall comply with 4.13 DOORS

B. If toilet stall approach is from the latch side of the stall door, clearance between the door side of the stall and any obstruction shall be 42" minimum. (This is an exception from typical door maneuvering clearances)

TAS SECTION 4.17.6 – GRAB BARS (REFERENCE DETAILS 4.16.2, 4.16.3, 4.17.1 & 4.17.2)

A. Grab Bars shall be mounted 33" – 36" above the floor.

Refer to 4.26 Grab Bars for size and structural requirements.

4.18 URINALS

TAS SECTION 4.18.2 – HEIGHT (REFERENCE DETAIL 12.3.1)

A. Urinals shall be stall-type or wallhung with a tapered, elongated rim at 17" maximum above the finished floor.
The rim shall extend a minimum of 14" from the wall.

TAS SECTION 4.18.3 – CLEAR FLOOR SPACE (REFERENCE DETAIL 4.18.1)

A. A clear floor space 30" wide by 48" deep minimum shall be provided in front of urinal to allow forward approach.
1. This space shall adjoin or overlap an accessible route.
2. Urinal shield that do not extend beyond the front edge of the urinal rim may be provided with 29" clearence between them.
3. Urinals installed in alcoves deeper than 24" require a maneuvering area of at least 36" minimum wide, centered on fixture.

TAS SECTION 4.18.4 – FLUSH CONTROLS (REFERENCE DETAIL 4.18.2)

A. Controls shall be 44" maximum above the finished floor.
1. Controls shall be hand operated or automatic.
2. Controls shall be operable with one hand and shall not require tight grasping, pinching, or twisting of the wrist.
3. The force required to activate controls shall be no greater than 5 lfb.

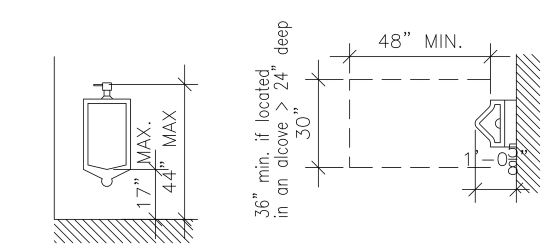

Detail 4.18.1 Detail 4.18.2

4.19 LAVATORIES & MIRRORS

TAS SECTION 4.19.2 – HEIGHT & CLEARANCES (REFERENCE DETAIL 4.19.1 & 4.19.2)

A. Lavatories shall be mounted with the rim or counter surface no higher than 34" above the finished floor.
1. Lavatories shall extend 17" minimum from the wall.
2. Clearance of 29" minimum shall be provided from the finished floor to bottom of apron.
3. Knee clearance of 27" minimum shall extend 8" minimum under the edge of the lavatory.
4. Toe clearance of 9" minimum shall be provided for the full depth of the lavatory.

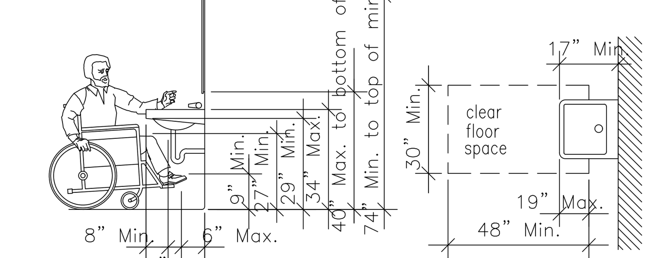

Detail 4.19.1 Detail 4.19.2

No.	REVISIONS	BY

GMS ARCHITECTS
1150 paredes line rd.
brownsville
texas 78526
(956) 546-0110
fax (956) 546-0196

RFCSP-0819-NEHSSL

SAN BENITO CISD
ADDITIONS AND RENOVATIONS AT SAN BENITO HS AND SULLIVAN ELEMENTARY
RFCSP-0819-NEHSSL

SAN BENITO
TEXAS

BID PACKAGE "B"
SAN BENITO
SULLIVAN

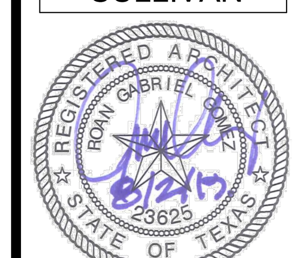

COPYRIGHT 2019
GOMEZ MENDEZ SAENZ INC.
ARCHITECTS-PLANNERS

DATE	MAY, 2019
SCALE	As Shown
DRAWN	R GOMEZ IO
JOB	S5001119
SHEET	G1.00

C:\Users\Station 9\Dropbox\S5001119 SBISD HS & Sullivan\Sullivan\X Sullivan ref-master plan.dwg

TAS SECTION 4.19.4 – EXPOSED PIPES AND SURFACES

A. Hot water and drain pipes under lavatories shall be insulated or otherwise configured to protect against contact.

B. There shall be no sharp or abrasive surfaces under lavatories.

TAS SECTIONS 4.19.5, 4.27.4 – FAUCETS

A. Controls shall be operable with one hand and shall not require tight grasping, pinching, or twisting of the wrist.

B. The force required to activate controls shall be no greater than 5 lbf.

C. Lever–operated, push–type, and electronically controlled mechanisms are examples of acceptable designs.

D. If self–closing valves are used the faucet shall remain open for at least 10 seconds.

TAS SECTION 4.19.6 – MIRRORS (REFERENCE DETAIL 4.19.1)

A. Mirrors shall be mounted with the bottom edge of the reflecting surface 40" maximum above the finished floor.

B. The top edge of the reflecting surface must be at least 74" AFF.

4.20 BATHTUBS

TAS SECTION 4.20.2 – FLOOR SPACE

A. Clear floor space shall be provided in front of bathtubs as follows:
30" wide x 60" long beside the bathtub for side approach
48" wide x 60" long beside the bathtub for front approach

with seat at head of tub – 30" wide x 75" long beside tub

TAS SECTION 4.20.3 – SEAT

A. An in–tub seat or a seat at the head end of the tub shall be provided. Seats shall be mounted securely and shall not slip during use.

TAS SECTIONS 4.20.4 – GRAB BARS

A. Heights permitted:

1. With in Tub Seat:
Foot Control wall: 24" long minimum, from outside wall, 33–36" above floor
Back wall: 2 bars, 24" long minimum, 12" maximum from foot wall, 24" maximum from head wall; one 33–36" above floor, one 9" above the tub
Head wall: 12" minimum, from outside wall, 33–36" above floor

2. With Seat at Head of Tub:
Control wall: 24" long minimum, from outside wall, 33–36" above floor
Back wall: 2 bars, 48" long minimum, 12" maximum from foot end, 15" maximum from head end; one 33–36" above floor, one 9" above the tub

Head wall: none

TAS SECTION 4.20.5

A. Controls must be located up front to the open side of tub

TAS SECTION 4.20.6 – SHOWER UNIT

A. A shower spray unit with a hose at least 60" long shall be provided that they can be used both as fixed and hand held.

4.21 SHOWER STALLS

TAS SECTION 4.21.2 – SIZE AND CLEARANCES

A. Shower stalls shall be either 36"x36" clear inside dimension (hold) at transfer type or 30" min. x 60" min. clear inside dimension at roll in type.

TAS SECTIONS 4.21.3 – SEAT

A. Seat is required in 36"x 36" stalls, and shall have the following features:

1. Shall be 17"–19" above bathroom floor
2. Shall extend the full depth of the stall
3. Shall be located on the wall opposite control wall
4. Maximum space between wall and seat edge shall be 1–1/2"
5. Shall project 16" maximum into stall width, except at the rear 15" maximum of the stall, where the seat may project 23"
6. Where a seat is provided in a roll in type shower it must be the folld–up type.

TAS SECTIONS 4.21.4 – GRAB BARS

A. Grab bars shall be mounted 33–36" above floor

TAS SECTIONS 4.21.5 – CONTROLS

A. All shower controls shall be located 38" minimum and 48" maximum above the floor, up front on the open side.

TAS SECTION 4.21.6 – SHOWER UNIT

A. A shower spray unit with a hose at least 60" long that can be used both as a fixed shower head and as a hand held shower shall be provided. The mounting device shall comply with the requirements for Forward Reach.

TAS SECTIONS 4.21.7 – CURBS

A. If provided, curbs on transfer showers shall be no higher than 1/2" roll–in showers shall not have curbs

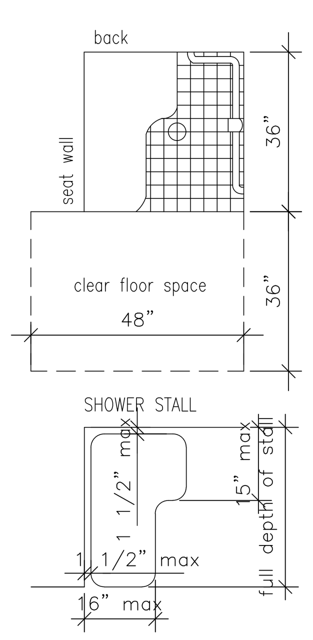

SHOWER SEAT DETAIL

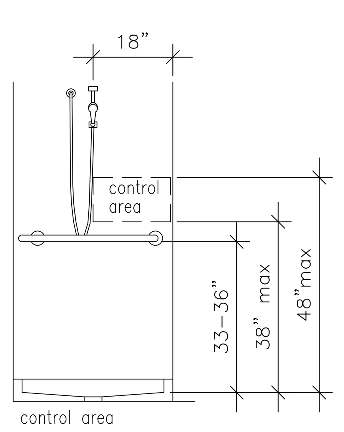

control area

4.22 TOILET ROOMS

TAS SECTIONS 4.22.2 – DOORS

A. All doors to accessible toilet rooms shall comply with 4.13. Doors shall not swing into clear floor space required for any fixture. Clear floor turning space may overlap door swings.

TAS SECTIONS 4.22.3 – CLEAR FLOOR SPACE

A. The accessible fixtures and controls required in 4.22.4, 4.22.5, 4.22.6 4.22.7 shall be on an accessible route. An unobstructed turning space complying with 4.2.3 shall be provided within an accessible toilet room. The clear floor space at fixtures and controls, the accessible route, and the turning space may overlap, however; the only turning space provided shall not be located within a stall.

TAS SECTIONS 4.22.4 – WATER CLOSETS

A. If toilet stalls are provided, then at least one shall be a standard toilet stall complying with 4.17; where 6 or more stalls are provided in addition to the stall complying with 4.17.3, at least one stall 36" wide with an outward swinging, self–closing door and parallel grab bars shall be provided. Water closets in such stalls shall comply with 4.16.

TAS SECTIONS 4.22.5 – URINALS

A. If urinals are provided, then at least one shall comply with 4.18.

TAS SECTIONS 4.22.6 – LAVATORIES AND MIRRORS

A. If lavatories and mirrors are provided, then at least one of each shall comply with 4.19. Accessible lavatories and mirrors shall not be located within toilet stalls unless other accessible lavatories and mirrors are provided in the toilet room.

TAS SECTIONS 4.22.7 – CONTROLS AND DISPENSERS

A. If controls, dispencers, receptacles, or other equipment are provided, then at least one of each shall be on an accessible route and shall comply with 4.27 – (Controls & Operating Mechanisms).

4.23 – BATHROOMS, BATHING FACILITIES, AND SHOWER ROOMS

TAS SECTION 4.23.8 – BATHING AND SHOWER FACILITIES

A. In addition to the requirements of 4.22. toilet rooms :
If tubs and showers are provided, then at least one accessible tub that complies with 4.20 or at least one accessible shower that complies with 4.21 shall be provided

4.24 – SINKS

TAS SECTION 4.24.2 – HEIGHT

A. Sinks shall be mounted with the rim or counter surface no higher than 34" above the finished floor.

TAS SECTIONS 4.24.3 – KNEE CLEARANCE

A. Knee clearance of 27" high minimum, 30" wide minimum, and 19" deep minimum shall be provided underneath sinks.

TAS SECTION 4.24.4 – DEPTH

A. Each sink shall be a maximum of 6–1/2" deep.

TAS SECTION 4.24.6 – EXPOSED PIPES AND SURFACES

A. Hot water and drain pipes under sinks shall be insulated or otherwise configured to protext against contact.

B. There shall be no sharp or abrasive surfaces under sinks.

TAS SECTION 4.24.7, 4.27.4 – FAUCETS

A. Controls shall be operable with one hand and shall not require tight grasping, pinching, or twisting of the wrist.

B. The force required to activate controls shall be no greater than 5 lbf.

C. Lever–operated, push–type, and electronically controlled mechanisms are examples of acceptable designs.

D. If self–closing valves are used the faucet shall remain open for at least 10 seconds.

4.25 – STORAGE

TAS SECTION 4.25.1 – DEPTH (REFERENCE DETAIL 4.25.1)

A. Storage areas may be 36" in depth or less. If more than 36" in depth then area must allow 60" diameter of clear floor space for turning.

TAS SECTION 4.25.2 – CLEAR FLOOR SPACE: (REFERENCE DETAIL 4.25.2)

TAS SECTION 4.25.3 – HEIGHT (REFERENCE DETAIL 14.3 AND 4.25.3 & 4.25.4)

A. Where a forward reach is required, accessible storage spaces shall be 48" maximum and 15" minimum above the floor. If the forward reach is over an obstruction (with knee space equal to or greater than reach distance) 20"–25" deep, the maximum height shall be 44"; if the obstruction is less than 20", maximum height shall be 48".

B. Where a side reach is provided, accessible storage spaces shall be 54" maximum and 9" minimum above the floor. Maximum height shall be 46" for side reach over an obstruction 34" maximum high and 24" maximum deep.

C. Clothes rods or shelves shall be a maximum 54" above floor where a side reach is required.

D. Where the distance from the wheelchair to the clothes rod or shelf exceeds 10" (as at closets with inaccessible doors) the following criteria shall be met:

1. Shelves: Reach: 21" maximum; height: 48" maximum, 9" minimum.

2. Clothes rods: reach 21" maximum; height: 48" maximum.

TAS SECTIONS 4.25.4, 4.27.4 – HARDWARE

A. Hardware for accessible storage facilities shall be operable with one hand and shall not require tight grasping, pinching, or tisting of the wrist.

B. The force required to activate the hardware shall be no greater than 5 lbf

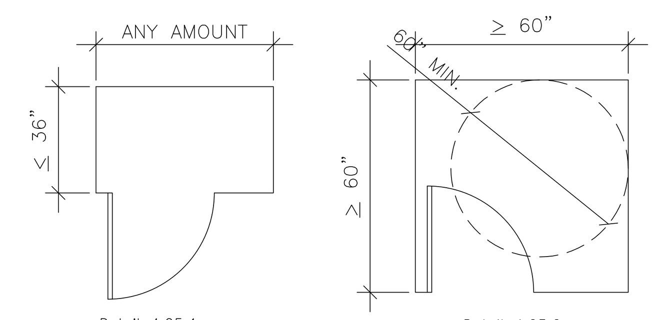

Detail 4.25.1

Detail 4.25.2

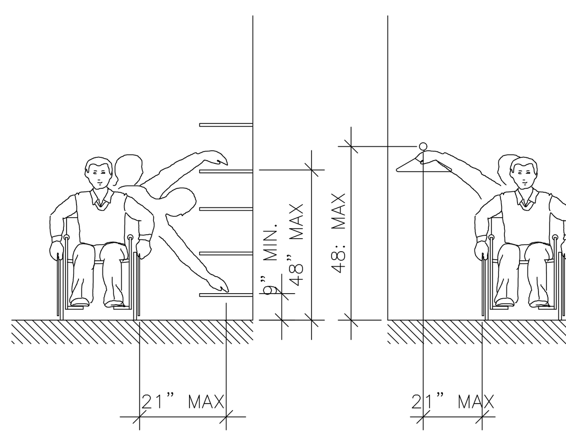

Detail 4.25.3

Detail 4.25.4

4.26 – GRAB BARS

TAS SECTION 4.26.2 – SIZE AND SPACING

A. Diameter or width of gripping surface shall be 1–1/4" to 1–1/2", or the shape shall provide an equivalent gripping surface.

1. The space between grab bars and adjacent walls shall be 1–1/2"

TAS SECTION 4.26.3 – STRUCTURAL STRENGTH

A. Grab bars and mounting devices shall meet the following requirements:

1. Bending stress induced by maximum bending moment from application of 250 lbf shall be less than allowable stress for material used.

2. Shear stress induced by application of 250 lbf shall be less than allowable shear stress for material used. If connection between grab bar and mounting bracket is considered to be fully restrained, then direct and torsional shear stresses shall be totaled for the combined shear stress, which shall not exceed the allowable shear stress.

3. Shear force induced in a fastener or mounting device from application of 250 lbf shall be less than allowable lateral load of either the fastener or mounting device or the supporting structure, whichever is the smaller allowable load.

4. Tensile force induced in a fastener by a direct tension force of 250 lbf plus the maximum moment from the application of 250 lbf shall be less than the allowable withdrawal load between the fastener and the supporting structure.

5. Grab bars shall not rotate within their fittings.

TAS SECTION 4.26.4 – ELIMINATING HAZARDS

A. Grab bars and adjacent wall surfaces shall be free of sharp or abrasive surfaces.

B. Edges shall have a radius of 1/8" minimum.

4.27 – CONTROLS AND OPERATING MECHANISMSS

TAS SECTION 4.27.3 – HEIGHT (REFERENCE DETAIL 4.30.3)

A. Front approach – 48" max. to 15" min.
Controls located in an alcove >24" deep must have 36" clear floor width.

B. Side approach – 54" max. to 9" min., except per below.

C. Electrical & communication system recepticals shall be mounted no less than 15" above the floor.

4.28 – ALARMS

TAS SECTION 4.28.1 – GENERAL

A. When required, visual alarms shall be provided in each of the following areas, as a minimum: restrooms and any other general usage areas (e.g., meeting rooms), hallways, lobbies, and any other area for common use.

TAS SECTION 4.28.2 – AUDIBLE ALARMS

A. If provided, audible alarms shall produce a sound that exceeds the prevailing equivalent sound level in the room or space by at least 15 dba or exceeds any maximum sound level with a duration of 60 seconds by 5 dba, whichever is louder.

B. Sound levels for alarm signals shall not exceed 120 dba.

TAS SECTION 4.28.3 – VISUAL ALARMS

A. Visual alarm signal appliances shall be integrated into the building or facility alarm system. If single station audible alarms are provided then single station visual alarm signals shall be provided.

Visual Alarm appliances shall have the following features:

1. The lamp shall be a xenon strobe type or equilavent.

2. The color shall be clear or nominal white (i.e. unfiltered or clear filtered white light).

3. The maximum pulse duration shall be two–tenths of one second with a maximum duty cycle of 40%. (The pulse duration is defined as the time interval between initial and final points of 10% of max signal)

4. The intensity shall be a minimum of 75 candela.

5. The flash rate shall be a minimum of 1 Hz and a maximum of 3 Hz

6. The appliance shall be placed 80" above the highest floor level within the space or 6" below the ceiling, whichever is lower.

7. In general, no place in any room or space shall be more than 50' from the signal (measured in a horizontal plane).

a. In large rooms and spaces exceeding 100' across, without obstructions 6' above the finished floor, such as auditoriums, devices may be place around the perimeter, spaced a maximum 100' apart, in lieu of suspending appliances from the ceiling.

8. No place in common corridors or hallways shall be more than 50' from the signal.

4.30 – SIGNAGE

TAS SECTIONS 4.1.2(7), 4.1.3(16)(a) – WHERE APPLICABLE

A. Signs which designate permament rooms and spaces shall comply with the requirements listed below for:

1. Raised and Braille Characters, and Pictograms

2. Finish and Contrast

Exception: Employee name signs are not required to comply.

TAS SECTIONS 4.1.2(7), 4.1.3(16)(b) – WHERE APPLICABLE

A. Signs which provide direction to, or information about, functional spaces of the building shall comply with the requirements listed below for:

1. Character Proportion

2. Character Height

3. Finish and Contrast

Exception: Building directories, menus, and all other signs which are temporary are not required to comply.

TAS SECTION 4.1.2(7) – WHERE APPLICABLE (REFERANCE DETAIL 4.30.1)

A. Element and spaces of accessible facilities which shall be identified by the International Symbol of Accessibility are:

1. Parking spaces designated as reserved for persons with disabilities.

2. Accessible passenger loading zones.

3. Accessible entrances when not all are accessible (inaccessible entrances shall have directional signage to indicate route to nearest accessible entrance).

4. Accessible toilet and bathing facilities when not all are accessible.

TAS SECTION 4.30.2 – CHARACTER PROPORTION (REFERENCE DETAIL 4.30.2)

A. Letters and numbers on signs shall have a width–to–height ratio between 3:5 and 1:1, and a stroke–width–to–height ratio between 1:5 and 1:10.

TAS SECTION 4.30.3 – OVERHEAD SIGNS

A. Characters and numbers on overhead signs shall be sized according to the viewing distance from which they are to be read.

1. For signs higher than 80" above the finished floor, character size shall be 3" minimum.

2. The minimum height is measured using an upper case X.

3. Lower case letters are permitted.

TAS SECTION 4.30.4 – RAISED AND BRAILLE CHARCTERS AND PICTOGRAMS

A. Letter and numerals shall be raised 1/32", upper case, sans serif and shall be accompanied by grade 2 Braille.

1. Raised character height: 5/8" minimum, 2" high maximum

2. Pictograms shall be accompanied by the equivalent verbal description placed directly below the pictogram.

3. The border dimension of the pictogram shall be 6" minimum

TAS SECTION 4.30.5 – FINISH AND CONTRAST

A. The character and background of the signs shall be eggshell, matte, or other non–glare finish. Charcters and symbols shall contrast with their bachground (either light characters on a dark background or dark characters on a light background).

TAS SECTION 4.30.6 – MOUNTING LOCATION AND HEIGHT (REFERENCE DETAIL 4.30.3)

A. Where permanent identification is provided for rooms and spaces, signs shall be installed on the wall adjacent to the latch side of the door.

B. Where there is no wall space to the latch side of the door, including at double–leaf doors, signs shall be placed on the nearest adjacent wall.

C. Mounting height shall be 60" above the finished floor to the centerline of the sign.

D. Mounting location for such signage shall be so that a person may approach within 3" of signage without encountering protruding objects or standing within the swing of a door.

International Symbol of Accessibilty

Detail 4.30.1

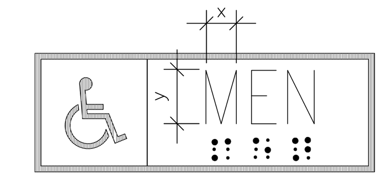

Letter & numbers on signs shall have a width to height ratio of between 3:5 & 1:1 and a stroke – width to height ratio between 1:5 & 1:10. Letters and numbers shall be raised 1/32", upper case, sans serif or simple serif type and shall be accompanied with grade 2 Braille, rasied characters shall be at least 5/8" high, but no higher than 2".

Detail 4.30.2

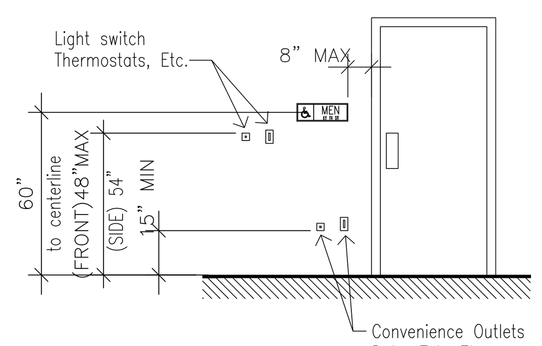

Detail 4.30.3

4.31 – PUBLIC TELEPHONES

TAS SECTION 4.1.3(17)(a) – WHERE APPLICABLE

A. If public pay telephones, public closed circuit telephones, or other public telephones if provided, then they shall comply with this section in the quantities below:

1. If one or more single unit of a type of public telephone is provided on a floor, then at least one of those phones shall comply with this section.

2. If one bank (defined as two or more adjacent public telephones, often installed as a unit) of a type of telephone is provided on a floor, then at least one of the telephones at the bank shall comply with this section.

3. If two or more banks of a type of public telephone are provided on a floor, then at least one telephone per bank shall comply with this section. The accessible unit may be installed as a single unit in proximity (either visible or with signage) to the bank. At least one public telephone per floor shall meet the requirements for a forward reach telephone.

Additional public telephones may be installed at any height.

Unless otherwise specified, accessible telephones may be either forward or side reach telephones.

TAS SECTION 4.1.3(17)(b) – WHERE APPLICABLE

A. All telephones required to be accessible shall be equipped with a volume control.

B. In addition, 25%, but never less than one, of all other public telephones provided shall be equipped with a volume control and shall be dispersed all type of telephones, including closed ciruit telephones, throughout the building or facility.

C. Signage displaying the International Symbol of Access for Hearing Loss shall be provided at each telephone equipped with a volume control.

TAS SECTION 51.3 – MOUNTING HEIGHT (REFERENCE DETAIL 4.31)

A. The highest operable part of the telephone shall be 48" maximum above the floor where a forward reach is required, and 54" maximum where a side reach is required.

B. If the forward reach is over an obstruction (with knee space equal to or greater than reach distance) 20"–25" deep the maximum height shall be 44"; if the obstruction is less than 20", maximum height shall be 48"

C. Maximum height shall be 46" for side reach over an obstruction 34" maximum high and 24" maximum deep.

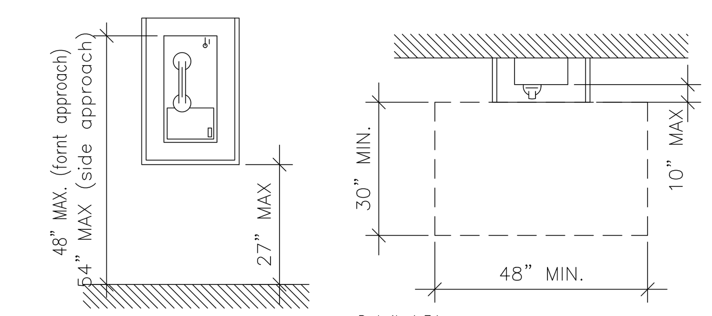

Detail 4.31

4.32 – SEATING AND TABLES

TAS SECTION 4.32.2 – SEATING

A. If seating spaces for people in wheelchairs are provided at fixed tables or counters, clear floor space of 30" x 48" shall be provided. Floor space shall not overlap required knee space by more than 19"

TAS SECTION 4.32.3 – KNEE SPACE

B. If seating for people in wheelchairs is provided at fixed tables or counters, knee space at least 27" high, 30" wide and 19" deep shall be provided.

TAS SECTION 4.32.4 – HEIGHT OF TABLES OR COUNTER

C. The tops of accessible tables and counters shall be 28" minimum, and 34" maximum, above the finished floor.

4.34 – AUTOMATIC TELLER MACHINES

TAS SECTIONS 4.34.2 – CLEAR FLOOR SPACE

A. Floor space shall comply with 4.2.4 to allow a forward, parallel approach or both.

TAS SECTIONS 4.34.3 – REACH RANGES

A. Forward approach only: controls within forward approach specified in 4.2.5.

B. Parallel approach: controls within unobstructed reach range from clear floor space at protrusion of teller machinr surround per table as follows:

Reach Depth	Maximum Height	Reach Depth	Maximum Height	Reach Depth	Maximum Height
in inches	in inches	in inches	in inches	in inches	in inches
10 or less	54	15	51	20	48 1/2
11	53 1/2	16	50 1/2	21	47 1/2
12	53	17	50	22	47
13	52 1/2	18	49 1/2	23	46 1/2
14	51 1/2	19	49	24	46

Note : above does not apply to drive up machines.

4.35 DRESSING AND FITTING ROOMS

TAS SECTIONS 4.35.2

A. Clear floor area with a 60" dia. wheelchair turnaround is required. The turnaround area must be clear of door swings.

TAS SECTIONS 4.35.4 – BENCH

A. Every accessible dressing room shall have a 24"x 48" bench fixed to the wall along the larger dimension. The bench shall be mounted 17" to 19" above the finish floor.

TAS SECTIONS 4.35.5 – MIRROR

A. A full–length mirror, measuring at least 18" wide by 54" high, shall be mounted in a position affording a view to a person on the bench as well as to a person in a standing position.

No.	REVISIONS	BY

GMS ARCHITECTS
1150 paredes line rd.
brownsville
texas 78526
(956) 546-0110
fax (956) 546-0196

RFCSP-0819-NEHSSL

TEXAS

SAN BENITO CISD
ADDITIONS AND RENOVATIONS AT SAN BENITO HS AND SULLIVAN ELEMENTARY
RFCSP-0819-NEHSSL

SAN BENITO

BID PACKAGE "B"
SAN BENITO
SULLIVAN

COPYRIGHT 2019
GOMEZ MENDEZ SAENZ INC.
ARCHITECTS-PLANNERS

DATE MAY, 2019
SCALE As Shown
DRAWN R GOMEZ IO
JOB S5001119
SHEET

G1.01

HATCH LEGEND

INDICATES DEMOLITION AREA

GENERAL DEMOLITION NOTES:

1 GENERAL CONTRACTOR TO TAKE CARE NOT TO DAMAGE EXISTING FOUNDATION, STRUCTURAL STEEL BEAMS / COLUMNS, SURROUNDING BUILDINGS AND VARIOUS SURFACES OUTSIDE OF DEMOLITION AREA. SHOULD ANY DAMAGE OCCUR OUTSIDE OF DEMOLITION AREA, THE GENERAL CONTRACTOR WILL BE RESPONSIBLE TO REPAIR OR REPLACE DAMAGED ITEMS.

2 GENERAL CONTRACTOR SHALL BE RESPONSIBLE FOR REMOVING AND DISPOSING DEBRIS & MATERIAL AWAY FROM SITE ACCORDING TO LOCAL & STATE REGULATIONS.

3 GENERAL CONTRACTOR SHALL BE RESPONSIBLE FOR VISITING THE PROJECT SITE TO SEE FIRST HAND WHAT DEMOLITION REQUIREMENTS ARE REQUIRED FOR THIS PROJECT AND SHALL INCLUDE IN HIS OR HER BID ALL THE DEMOLITION REQUIREMENTS TO COMPLETE THIS PROJECT.

4 LOCATE AND LABEL ALL UTILITIES BEFORE ANY DEMOLITION & CONSTRUCTION SHALL BEGIN SO THAT ANY SUBCONTRACTOR VISITING THIS SITE CAN EASILY IDENTIFY THESE.

5 GENERAL CONTRACTOR TO FAMILIARIZE THEMSELVES WITH THIS PROJECT SITE AND DEMOLITION REQUIREMENTS FOR BUILDING ADDITION - INCLUDE IN BID ALL DEMOLITION AND CLEARING NECESSARY TO COMPLETE THIS PROJECT

6 COORDINATE WITH ARCHITECT AND/OR ENGINEERS PRIOR TO ANY DEMOLITION ITEMS THAT ARE UNCLEAR.

7 REFER TO MECHANICAL, ELECTRICAL & PLUMBING PLANS FOR ADDITIONAL SITE DEMOLITION NOTES.

8 PROVIDE TEMPORARY CONSTRUCTION FENCE - ENSURE THAT CONSTRUCTION SITE IS SECURE FROM ANYONE THAT MAY VISIT THE SITE - ENSURE CONSTRUCTION FENCE IS A MINIMUM OF 6'-0" HIGH CHAIN LINK FENCE OR APPROVED EQUAL

9 ALL DEMOLISHED MATERIAL IS TO BE REMOVED FROM PROJECT SITE AND DISPOSED OF PROPERLY PRIOR TO COMMENCING NEW CONSTRUCTION.

KEYED DEMOLITION NOTES:

D1 DEMOLISH EXISTING MASONRY CANOPY AND ALL STRUCTURE INCLUDING BUT NOT LIMITED TO: WOOD OR METAL STUDS, CMU, BRICK VENEER, PLASTER SOFFIT, SEATING BENCHES, WALL FINISHES AND WALL BASE ELECTRICAL LIGHTING AND PLUMBING SYSTEMS

D2 REMOVE EXISTING SIDEWALKS SAW CUT AN DEMOLITION LIMITS

D3 REMOVE EXISTING STORE FRONT WINDOW FRAMES AND DOORS INCLUDING BUT NOT LIMITED TO: GLASS, MULLION, AND ANY FRAMING, PROPERLY DISPOSE OF ANY BROKEN GLASS.

D4 DEMOLISH ALL EXISTING LANDSCAPE AND VEGETATION AT THIS AREA

D5 RE-ROUTE AND RE GRADE AREAS WHERE DOWNSPOUTS SHALL BE REMOVED

D6 EXISTING BRICK COLUMNS TO REMAIN

D7 EXISTING PLASTER SOFFIT TO REMAIN REPAIR AS NEEDED

D8 EXISTING FLAG POLE TO BE REMOVED

D9 EXISTING LIGHT POLE TO BE RELOCATED REF MEP DWGS

D10 SAW CUT EXISTING SIDEWALK TO ACCOMMODATE NEW TRENCH DRAIN

02 DEMOLITION ELEVATION
SCALE: 1/8" = 1'-0"
PLAN NORTH

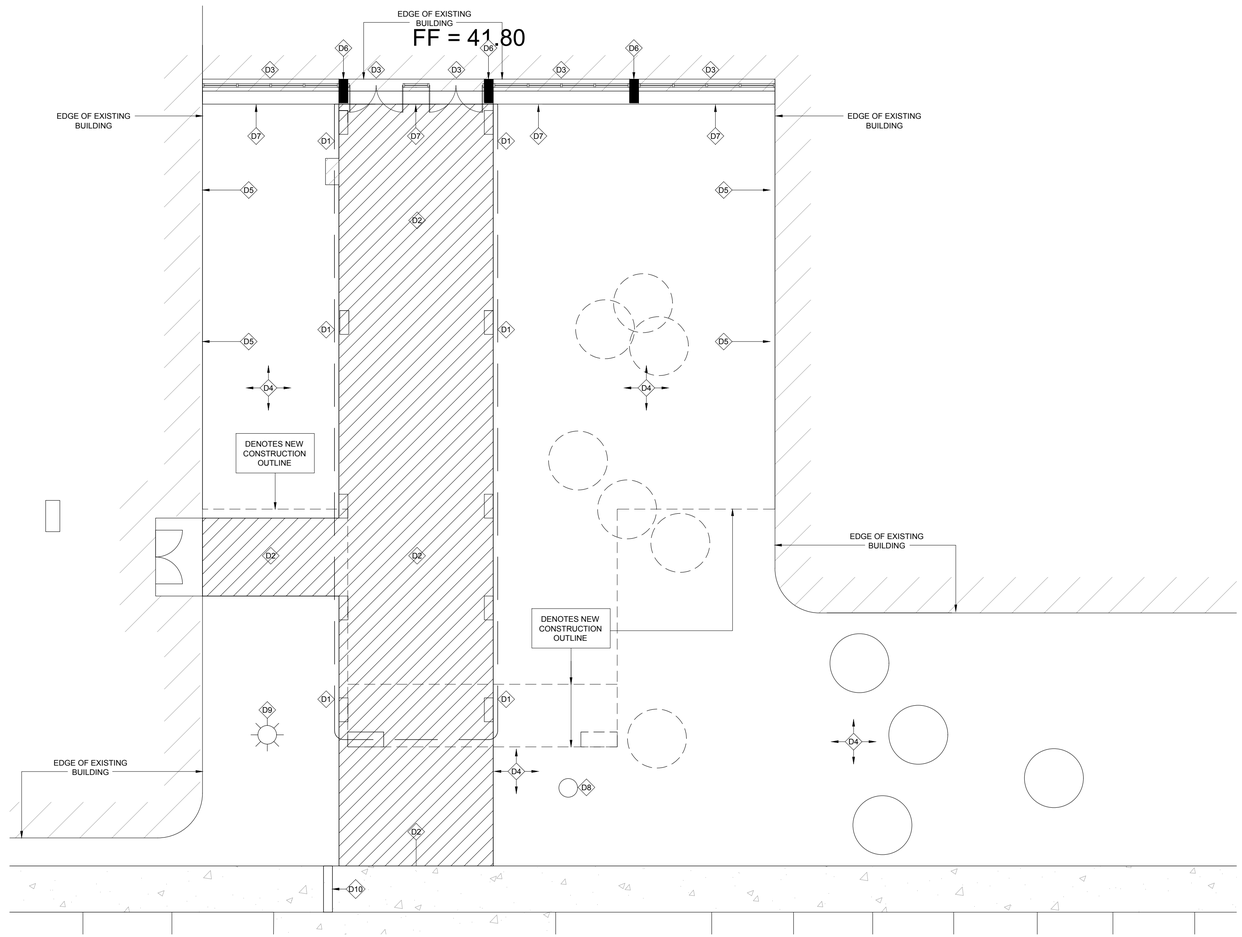

01 DEMOLITION SITE PLAN
SCALE: 1/8" = 1'-0"
PLAN NORTH

No.	REVISIONS	BY

GMS ARCHITECTS

1150 paredes line rd.
brownsville
texas 78526
(956) 546-0110
fax (956) 546-0196

RFCSP-0819-NEHSSL

SAN BENITO CISD
ADDITIONS AND RENOVATIONS AT SAN BENITO HS AND SULLIVAN ELEMENTARY
RFCSP-0819-NEHSSL

SAN BENITO TEXAS

SAN BENITO HIGH SCHOOL

REGISTERED ARCHITECT ROMAN GABRIEL SAENZ 23625 STATE OF TEXAS

COPYRIGHT 2019
GOMEZ MENDEZ SAENZ INC.
ARCHITECTS-PLANNERS

DATE	MAY, 2019
SCALE	As Shown
DRAWN	R GOMEZ IO
JOB	S5001119
SHEET	D1.01

C:\Users\Station 9\Dropbox\S5001119 SBISD HS & Sullivan\High School\Fa ref-Master Plan.dwg

HATCH LEGEND

INDICATES DEMOLITION AREA

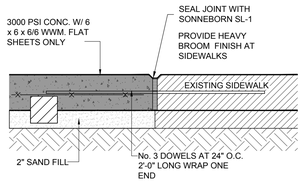

06 SIDEWALK DETAIL

SCALE: 1-1/2" = 1'-0"

TYPICAL AT ALL NEW TO EXISTING SIDEWALK TRANSITIONS

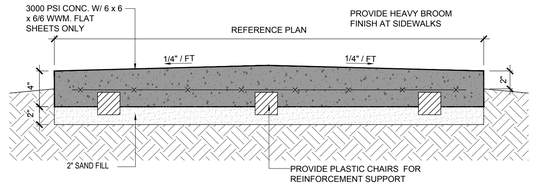

05 SIDEWALK DETAIL

SCALE: 1-1/2" = 1'-0"

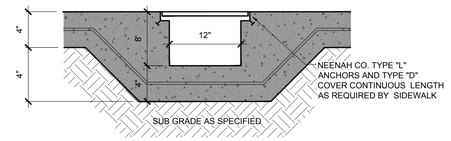

04 TRENCH DETAIL

SCALE 1 1/2" = 1'-0"

1.) CONTRACTOR TO VERIFY ALL BUILDING ROOF DRAINS & DOWN SPOUTS THAT WILL SPILL ONTO A SIDEWALK AND PROVIDE A TRENCH GUTTER AT THAT LOCATION TO ALLOW FOR RAIN WATER TO DRAIN THRU GUTTER AND NOT OVER SIDEWALK (WHICH COULD CAUSE A TRIPPING HAZARD). CONTRACTOR TO VERIFY TRENCH GUTTERS NEEDED PRIOR TO ANY POURING OF SIDEWALKS AROUND PERIMETER OF BUILDING. TYPICAL AT ALL BUILDINGS.

2.) REFER TO CIVIL DRAWINGS FOR ALL OTHER LOCATIONS OF TRENCH GUTTERS

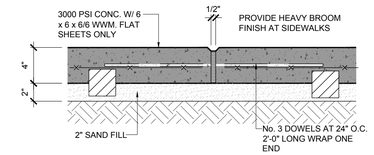

03 SIDEWALK EXP. JT. DETAIL

SCALE: 1-1/2"=1'-0"

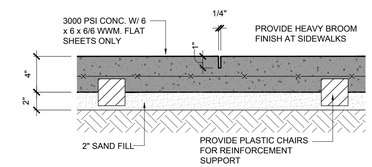

02 SIDEWALK CONTROL JT.

SCALE: 1-1/2"=1'-0"

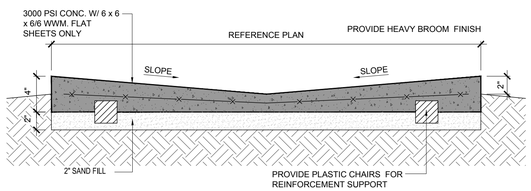

08 GUTTER DETAIL

SCALE: 1-1/2" = 1'-0"

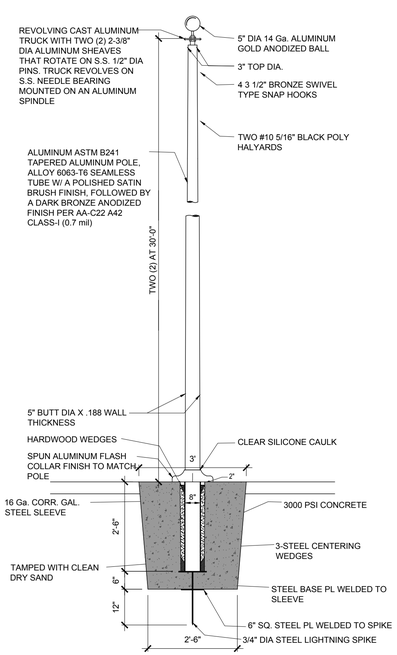

07 FLAG POLE DETAIL

SCALE: 1/2" = 1'-0" REFER TO PLANS FOR LOCATIONS

01 CAMPUS PLAN

SCALE: 1" = 40'-0"

PLAN NORTH

SITE NOTES:

1.) FINISH GRADE TO BE 6" BELOW FINISH FLOOR ELEVATION SLOPE AWAY FROM ALL IMPROVEMENTS AT A RATE OF 1/4" PER FOOT FOR THE FIRST 10'-0"; THEN AT A RATE OF 1/8" PER FOOT FOR THE NEXT 20'-0"

2.) SIDE WALK SLOPE IS NOT TO EXCEED 1:20 WITH A CROSS SLOPE OF 1:50 AT ANY INSTANCE.

3.) REFER TO CIVIL, LANDSCAPE AND MECHANICAL DRAWINGS FOR ADDITIONAL WORK TO BE PERFORMED UNDER THIS CONTRACT.

4.) AT ALL ENTRIES OF NEW BUILDINGS WARP CONCRETE SIDEWALKS SO AS TO PROVIDE A FLAT SURFACE WITH FINISHED FLOOR

LEGEND

1	5'-0" WIDE CONCRETE WALK W/ 5' TURN AROUNDS @ 250' MAX REFER TO DTL'S 2-6 \A1.01
2	10'-0" WIDE CONCRETE WALK W/ 5' TURN AROUNDS @ 250' MAX REFER TO DTL'S 2-6 \A1.01
3	NEW LANDSCAPE AND IRRIGATION REF. LANDSCAPE DRAWINGS
4	NEW FLAG POLES REF 07/A1.01 (2 REQUIRED)
5	NEW TO EXISTING SIDEWALK CONDITION REF. 06\A1.01
6	NEW CONCRETE VALLEY GUTTER REF. 08/A1.01
7	NEW TRENCH REF. 04/A1.01

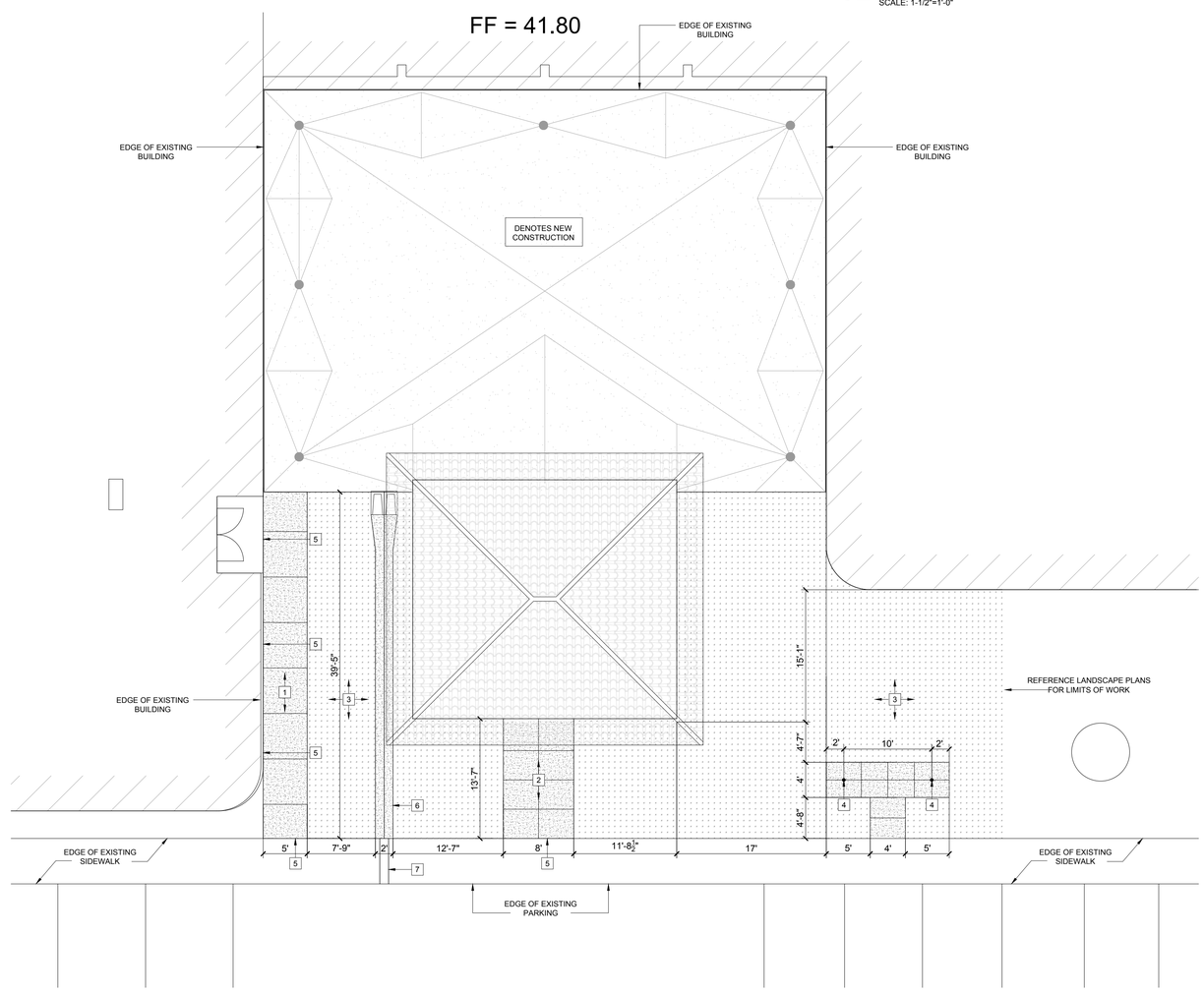

No.	REVISIONS	BY

GMS ARCHITECTS

1150 paredes line rd.
brownsville
texas 78526
(956) 546-0110
fax (956) 546-0196

RFCSP-0819-NEHSSL

TEXAS

SAN BENITO CISD
ADDITIONS AND RENOVATIONS AT SAN BENITO HS AND SULLIVAN ELEMENTARY
RFCSP-0819-NEHSSL

SAN BENITO

SAN BENITO HIGH SCHOOL

REGISTERED ARCHITECT RAM GABRIEL GOMEZ 06/21/19 23625 STATE OF TEXAS

COPYRIGHT 2019
GOMEZ MENDEZ SAENZ INC.
ARCHITECTS-PLANNERS

DATE	MAY, 2019
SCALE	As Shown
DRAWN	R GOMEZ IO
JOB	S5001119
SHEET	A1.01

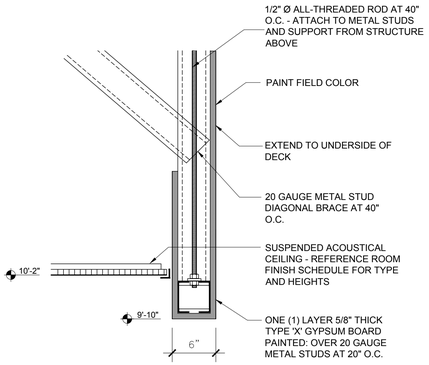

04 SECTION DETAIL
SCALE 1" = 1'-0"

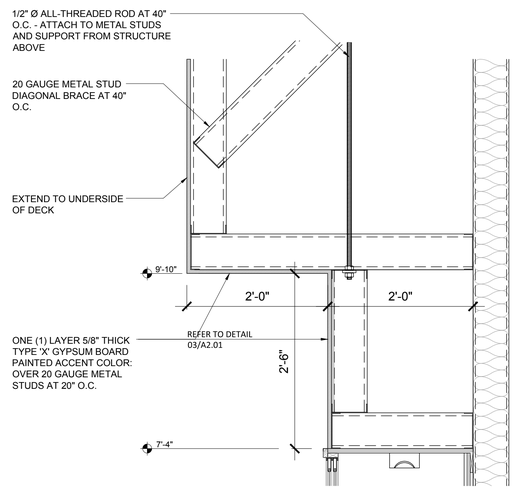

03 SECTION DETAIL
SCALE 1" = 1'-0"

ALL WALLS TO BE PAINTED UNLESS NOTED OTHERWISE

THIS SCHEDULE BASED ON PLAN NORTH ORIENTATION

ROOM FINISH SCHEDULE

ROOM	ROOM NAME	BASE	FLR.	WALLS N	WALLS S	WALLS E	WALLS W	CLG.	CLG. HEIGHTS	REMARKS
100	ENTRY		CONC	BRICK				MTL	13'-8"	
101	ENTRY		TERAZ	TERAZ	GYP/PTD	GYP/PTD	GYP/PTD	GYP/PTD	VARIES	
102	RECEPTION		TERAZ	TERAZ	GYP/PTD	GYP/PTD	GYP/PTD	GYP/PTD	SAC I	9'-8"
103	OFFICE		RUBBER	VCT	GYP/PTD	GYP/PTD	GYP/PTD	GYP/PTD	SAC I	9'-4"
104	ELECTRICAL		RUBBER	CONC	GYP/PTD	GYP/PTD	GYP/PTD	GYP/PTD		EXPOSED
105	SUPPLY		RUBBER	VCT	GYP/PTD	GYP/PTD	GYP/PTD	GYP/PTD	SAC I	9'-4"
106	OFFICE		RUBBER	VCT	GYP/PTD	GYP/PTD	GYP/PTD	GYP/PTD	SAC I	9'-4"
107	OFFICE		RUBBER	VCT	GYP/PTD	GYP/PTD	GYP/PTD	GYP/PTD	SAC I	9'-4"
108	CLASSROOM		RUBBER	VCT	GYP/PTD	GYP/PTD	GYP/PTD	GYP/PTD	SAC I	9'-8"
109	LOBBY/DISPLAY		TERAZ	TERAZ	GYP/PTD	GYP/PTD	GYP/PTD	GYP/PTD		EXPOSED	3'-6" CT WAINSCOT

F I N I S H L E G E N D :

RUBBER — RUBBER BASE
PTD — PAINTED
CMU/PTD — CONC. MASONRY UNIT PAINTED
GYP/PTD — GYPSUM BOARD PAINTED
CONC. — SEALED CONCRETE
MTL — METAL SOFFIT PANELS
C.T. — CERAMIC TILE BY DAL-TILE
VCT — VINYL TILE ALLOW FOR 3 COLORS
TERAZ — TERRAZO

W A L L T Y P E L E G E N D

01 FLOOR PLAN
SCALE :1/8" = 1'=0"

G E N E R A L N O T E S:

1. REFERENCE **A4.00 SERIES** FOR WALL SECTIONS NOTED ON THIS PLAN.
2. PROVIDE MASONRY CONTROL JOINTS AS PER STRUCTURAL STRUCTURAL .
3. PROVIDE TRANSITION STRIPS AT ALL DISSIMILAR FLOOR CONDITIONS
4. REFERENCE FIXTURE PLANS SHEET FOR FIXTURES, ACCESSORY REQUIREMENTS AND FLOOR TILE PATTERN LAYOUT

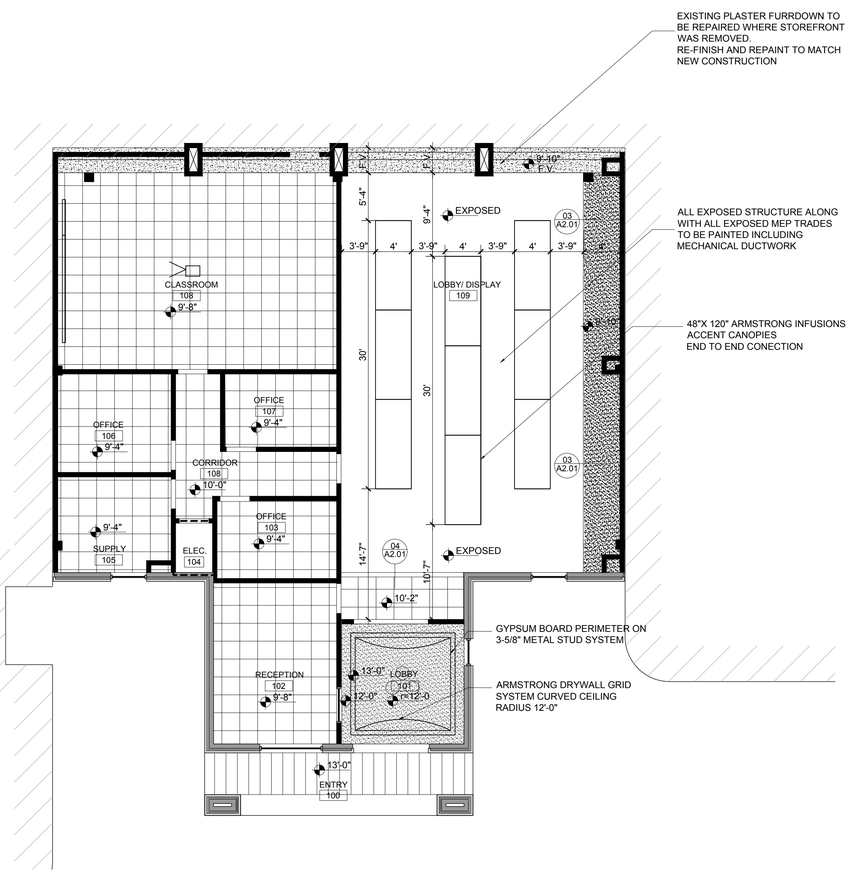

02 REFLECTED CEILING PLAN
SCALE :1/8" = 1'=0"

NOTE: REFER TO ROOM FINISHED SCHEDULE FOR CEILING TYPES TO BE USED ON THIS PLAN

PROVIDE FOR ALL STRUCTURE INCLUDED BUT NOT LIMITED TO PIPING, CONDUITS AND ANY METAL SUPPORT OR ANCHORING TO BE PAINTED WITH TNEMEC PAINT SYSTEM

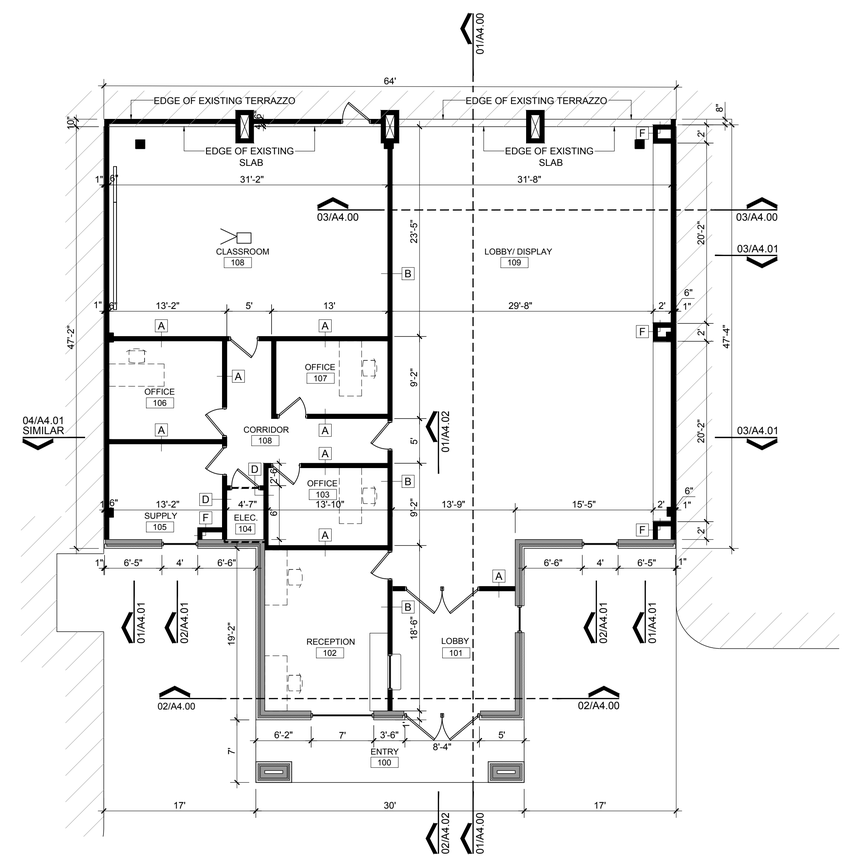

01 FLOOR PLAN
SCALE: 1/8" = 1'-0"

PLAN NORTH

3790 TOTAL SQUARE FEET

No.	REVISIONS	BY

GMS ARCHITECTS

1150 paredes line rd.
brownsville
texas 78526
(956) 546-0110
fax (956) 546-0196

RFCSP-0819-NEHSSL

SAN BENITO CISD
ADDITIONS AND RENOVATIONS AT SAN BENITO HS AND SULLIVAN ELEMENTARY
RFCSP-0819-NEHSSL

SAN BENITO TEXAS

SAN BENITO HIGH SCHOOL

REGISTERED ARCHITECT ROAN GABRIEL GOMEZ 3625 STATE OF TEXAS

COPYRIGHT 2019
GOMEZ MENDEZ SAENZ INC.
ARCHITECTS-PLANNERS

DATE	MAY, 2019
SCALE	As Shown
DRAWN	R GOMEZ IO
JOB	S5001119
SHEET	A2.01

C:\Users\Station 9\Dropbox\S5001119 SBISD HS & Sullivan\High School\r-ref-Master Plan.dwg

WINDOW SCHEDULE

WDW NO.	MATL	SIZE W	SIZE H	ELEVATION HEAD	ELEVATION SILL	GLASS	DETAIL JAMB	DETAIL HEAD	DETAIL SILL	REMARKS
A	BRNZ-ALUM	7'-0"	7'-0"			LOW- E INSUL OPAQUE	02/A2.02	03/A2.02	05/A2.02	
B	BRNZ-ALUM	4'-0"	4'-0"			LOW- E INSUL OPAQUE	02/A2.02	03/A2.02	05/A2.02	
C	BRNZ-ALUM	4'-0"	8'-0"			LOW- E INSUL OPAQUE	02/A2.02	03/A2.02	05/A2.02	
D	CLR-ALUM	4'-0"	4'-0"			LOW- E INSUL OPAQUE	06/A2.02	07/A2.02	02/A3.01	

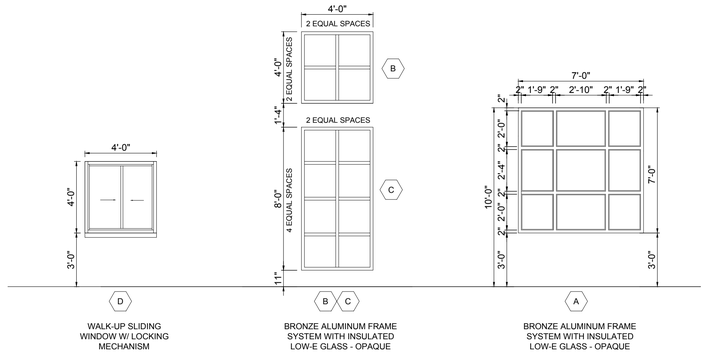

WINDOW ELEVATIONS

SCALE 1/4" = 1'-0"

NOTE: 1.) ALL EXTERIOR WINDOW FRAMES AND GLAZING TO MEET STRUCTURAL WIND LOAD PRESSURES.

DOOR SCHEDULE

DOOR NO.	DOOR MATL.	DOOR W	DOOR H	DOOR T	FRAME MATL.	FRAME W	FRAME H	FRAME T	HDWR	DETAIL JAMB	DETAIL HEAD	DETAIL SILL	REMARKS
1	ALUM.	PR - 4'-0"	7'-0"	1 3/4"	ALUM.	8'-4"	10'-0"	VERIFY		03/A2.02	04/A2.02	02/A2.02	
2	ALUM.	PR - 4'-0"	7'-0"	1 3/4"	ALUM.	8'-4"	7'-2"	VERIFY		03/A2.02	04/A2.02	02/A2.02	
3	S.C.	3'-0"	7'-0"	1 3/4"	H.M.	3'-4"	7'-2"	VERIFY		06/A2.02	07/A2.02		
4	S.C.	3'-0"	7'-0"	1 3/4"	H.M.	3'-4"	7'-2"	VERIFY		06/A2.02	07/A2.02		
5	S.C.	3'-0"	7'-0"	1 3/4"	H.M.	3'-4"	7'-2"	VERIFY		06/A2.02	07/A2.02		
6	S.C.	3'-0"	7'-0"	1 3/4"	H.M.	3'-4"	7'-2"	VERIFY		06/A2.02	07/A2.02		
7	S.C.	3'-0"	7'-0"	1 3/4"	H.M.	3'-4"	7'-2"	VERIFY		06/A2.02	07/A2.02		
8	S.C.	3'-0"	7'-0"	1 3/4"	H.M.	3'-4"	7'-2"	VERIFY		06/A2.02	07/A2.02		
9	S.C.	3'-0"	7'-0"	1 3/4"	H.M.	3'-4"	7'-2"	VERIFY		06/A2.02	07/A2.02		

NOTE : PROVIDE LABELED DOORS AND HARDWARE AT ALL FIRE RATED PARTITIONS
NOTE : ALL EXTERIOR HOLLOW METAL DOORS & FRAMES TO BE HOT DIPPED Galv., - TYP.
NOTE : ALL GIVEN DIMENSIONS OF DOOR LITES ARE VISIBLE GLASS AREA - ACTUAL LIGHT OPENING TO VARY BY MANUFACTURE'S REQUIREMENTS

NOTE : REFER TO FIXTURE PLANS FOR CORRESPONDING DOOR HARDWARE SETS
NOTE : PROVIDE CYLINDERS OF ALL LOCKSETS TO BE KEYED TO EXISTING GRANDMASTER SYSTEM.
NOTE : CONTRACTOR MUST PROVIDE TRANSITION STRIPS AT ALL DISSIMILAR FLOOR CONDITIONS BETWEEN ROOMS AT DOOR SILLS

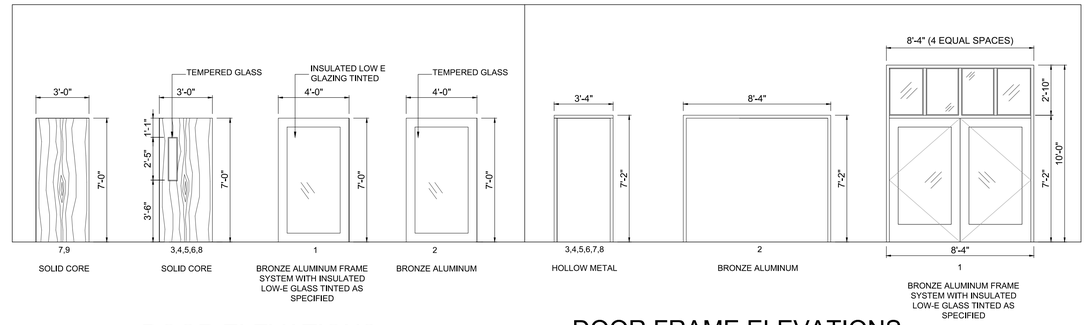

DOOR ELEVATIONS

SCALE 1/4" = 1'-0"

NOTE: ALL EXTERIOR HOLLOW METAL DOORS TO BE HOT DIPPED GALVANIZED REGARDLESS WHETHER NOTED OR NOT.

DOOR FRAME ELEVATIONS

SCALE 1/4" = 1'-0"

NOTE: ALL EXTERIOR HOLLOW METAL DOOR FRAMES TO BE HOT DIPPED GALVANIZED REGARDLESS WHETHER NOTED OR NOT.

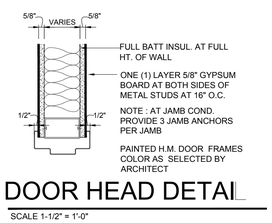

07 DOOR HEAD DETAIL

SCALE 1-1/2" = 1'-0"

N O T E :
- WALLS THAT REQUIRE GYP BOARD ARE AS SHOWN ON FLOOR PLAN
- PROVIDE DRYWALL CONTROL JOINTS TO CEILING

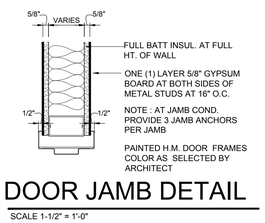

06 DOOR JAMB DETAIL

SCALE 1-1/2" = 1'-0"

N O T E :
- WALLS THAT REQUIRE GYP BOARD ARE AS SHOWN ON FLOOR PLAN
- PROVIDE DRYWALL CONTROL JOINTS TO CEILING

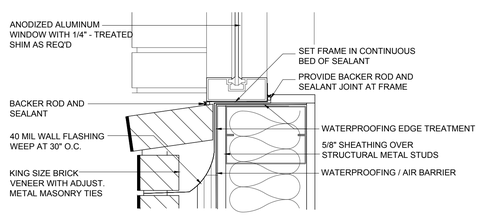

05 SILL DETAIL

NOT TO SCALE
WINDOW HEAD SIMILAR

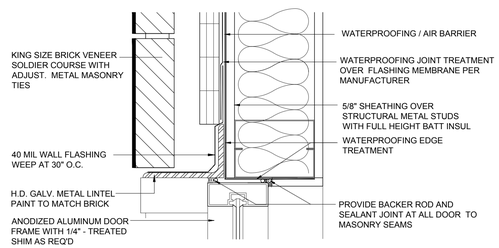

04 DOOR / WINDOW HEAD DETAIL

NOT TO SCALE
WINDOW HEAD SIMILAR

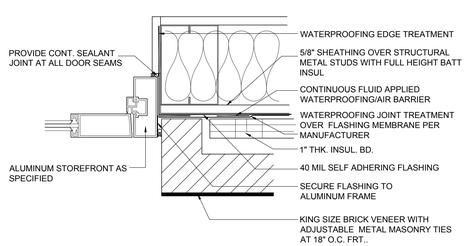

03 WINDOW JAMB DETAIL

NOT TO SCALE
WINDOW JAMB SIMILAR

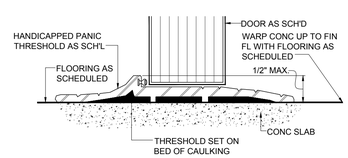

02 THRESHOLD DETAIL

SCALE : NONE

ALL EXTERIOR GLAZING ASSEMBLIES FOR WINDOWS & STOREFRONTS NEED TO BE DESIGNED TO MEET ASCE 7-05 WIND PRESSURES & SHALL BE IMPACT RESISTANT MEETING ASTM E 1996 FOR LARGE MISSILES.

ALL EXTERIOR WINDOWS, DOORS, STOREFRONTS & O.H. DOOR ASSEMBLIES SHALL BE CERTIFIED TO MEET THE PROJECTS MINIMUM DESIGN WIND PRESSURES. REFERENCE STRUCTURAL DRAWINGS FOR DESIGN WIND PRESSURE REQUIREMENTS - TYPICAL THROUGHOUT PROJECT

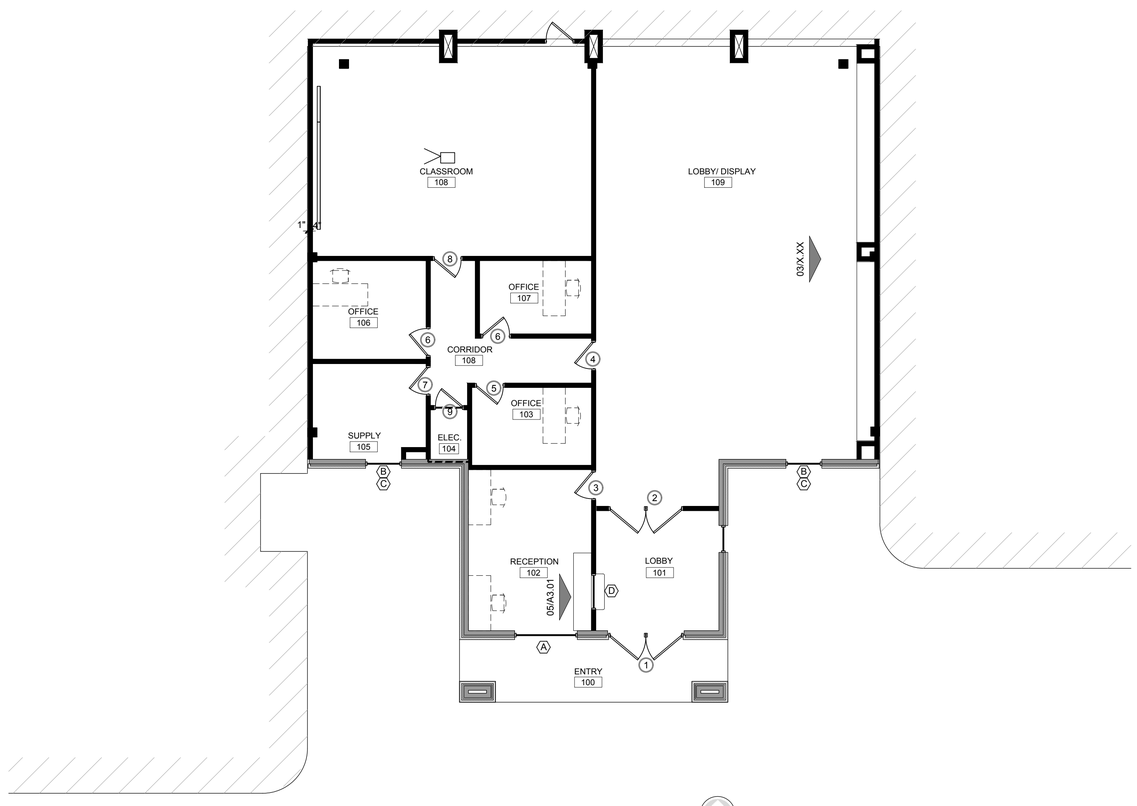

01 FIXTURE PLAN

SCALE: 1/8" = 1'-0"

PLAN NORTH

No.	REVISIONS	BY

GMS ARCHITECTS
1150 paredes line rd.
brownsville
texas 78526
(956) 546-0110
fax (956) 546-0196

RFCSP-0819-NEHSSL

SAN BENITO CISD
ADDITIONS AND RENOVATIONS AT SAN BENITO HS AND SULLIVAN ELEMENTARY
RFCSP-0819-NEHSSL

SAN BENITO TEXAS

SAN BENITO HIGH SCHOOL

REGISTERED ARCHITECT ROLAN GABRIEL MENDEZ 12/13/19 23623 STATE OF TEXAS

COPYRIGHT 2019
GOMEZ MENDEZ SAENZ INC.
ARCHITECTS-PLANNERS

DATE	MAY, 2019
SCALE	As Shown
DRAWN	R GOMEZ IO
JOB	S5001119
SHEET	A2.02

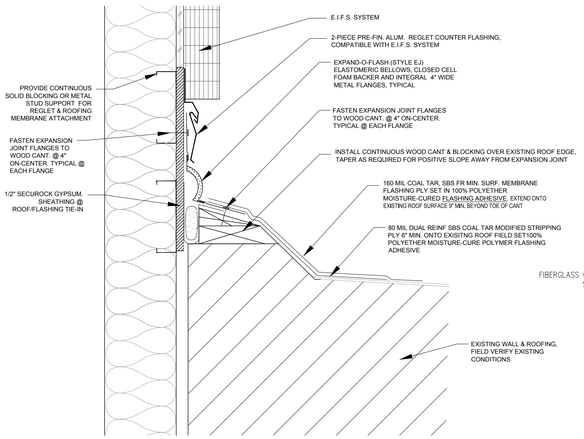

05 EXP. JT. DETAIL

NOT TO SCALE

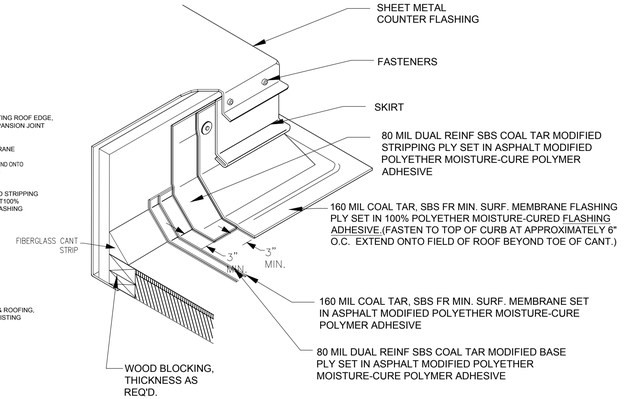

04 METAL CURB FLASHING DETAIL

NOT TO SCALE

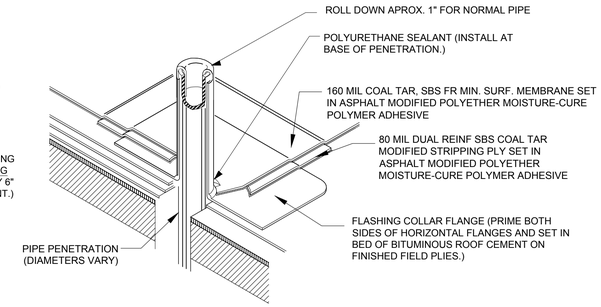

03 VENT PIPE DETAIL

NOT TO SCALE

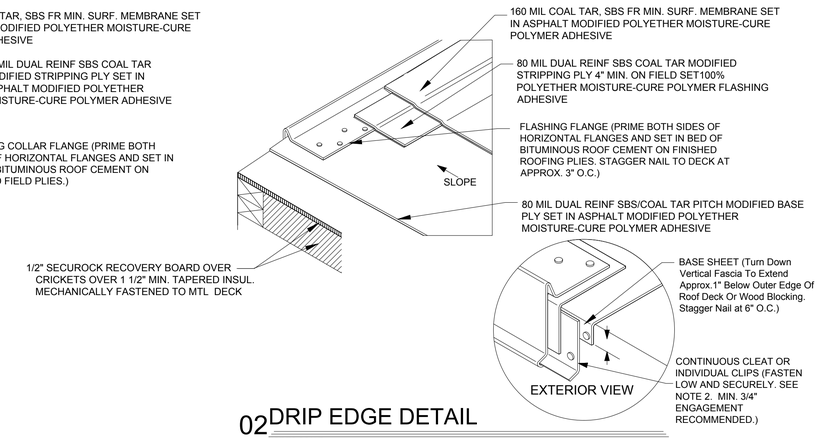

02 DRIP EDGE DETAIL

NOT TO SCALE

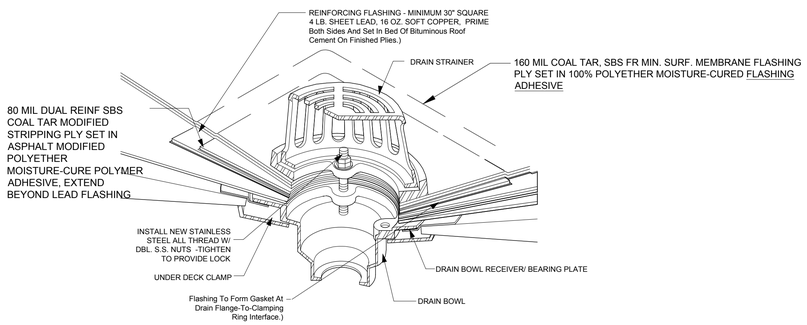

06 TYP. ROOF DRAIN DETAIL

NOT TO SCALE

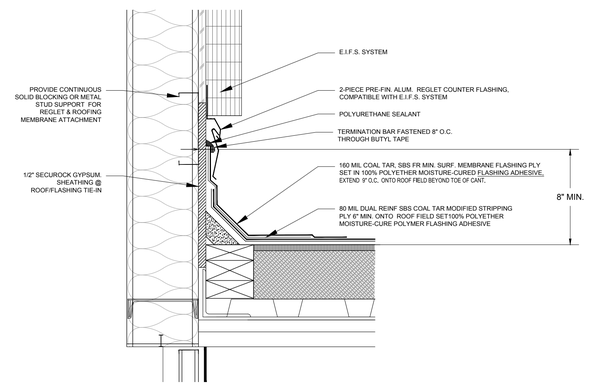

08 FLASHING DETAIL

NOT TO SCALE

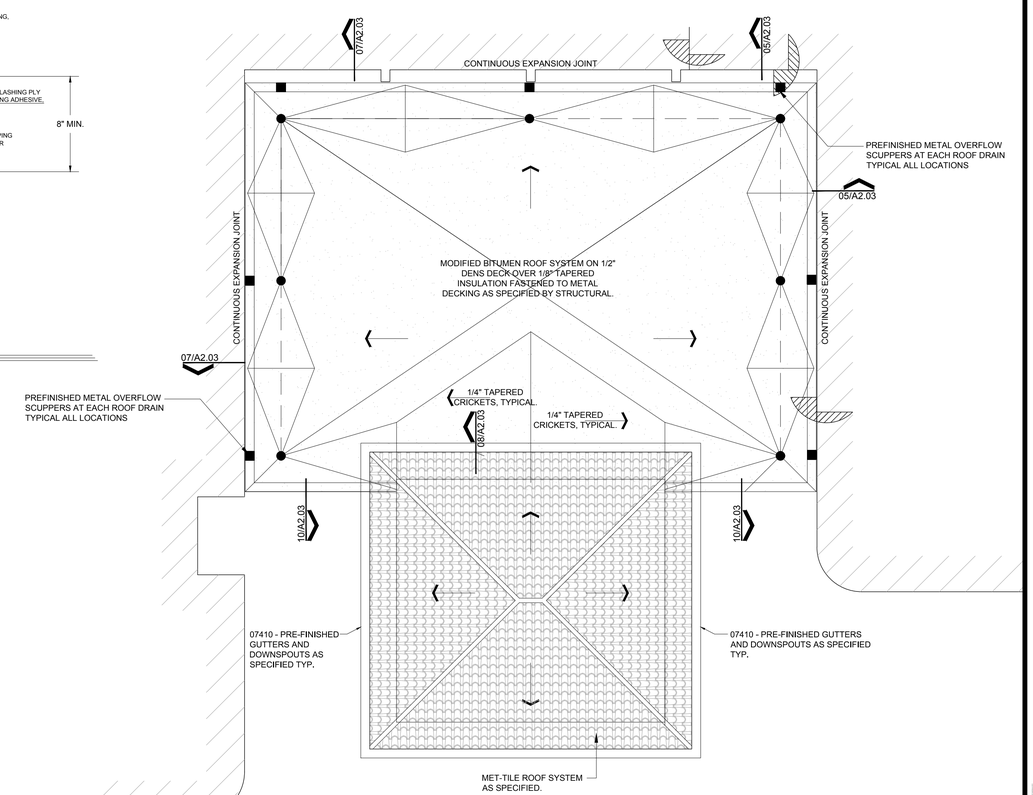

01 ROOF PLAN

SCALE: 1/8" = 1'-0"

PLAN NORTH

GENERAL ROOF NOTES:

1.) PROVIDE WALKWAY SYSTEM AT ALL ROOF TOP EQUIPMENT

2.) PROVIDE POSITIVE DRAINAGE IN AND AROUND ALL ROOF TOP EQUIPMENT SO AS TO DRAIN INTO AREA ROOF DRAINS

3.) PROVIDE POSITIVE DRAINAGE TOWARDS DRAINS BY USE OF CRICKETS

4.) PROVIDE PRE-MANUFACTURED CONCRETE SPLASH BLOCKS AT EACH ROOF DOWN SPOUT LOCATION AND OR AT EACH ROOF DRAIN NOZZLE OUTLET. SECURE SPLASH BLOCKS TO EITHER GROUND OR BUILDING

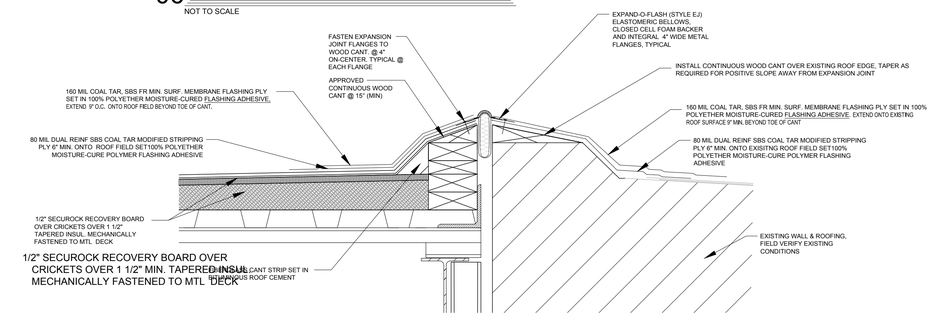

07 EXPANSION JOINT DETAIL

NOT TO SCALE

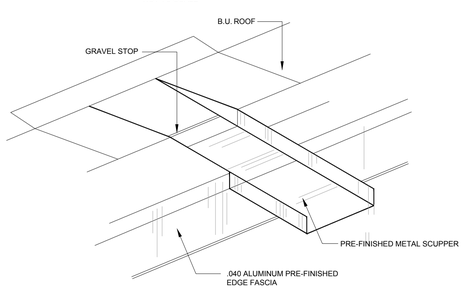

09 SCUPPER DETAIL

NOT TO SCALE

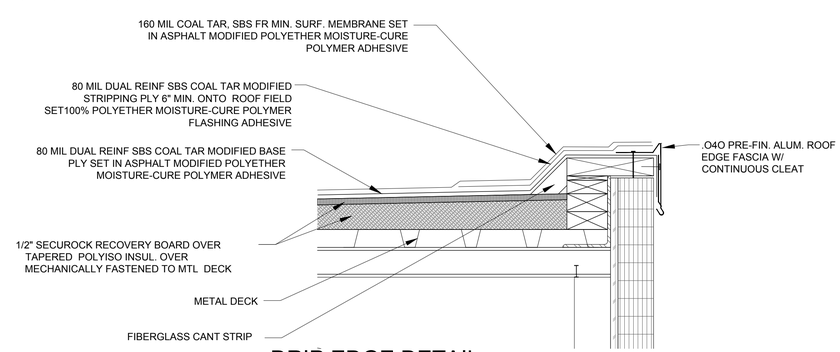

10 DRIP EDGE DETAIL

NOT TO SCALE

No.	REVISIONS	BY

GMS ARCHITECTS

1150 paredes line rd.
brownsville
texas 78526
(956) 546-0110
fax (956) 546-0196

RFCSP-0819-NEHSSL

SAN BENITO CISD
ADDITIONS AND RENOVATIONS AT SAN BENITO HS AND SULLIVAN ELEMENTARY
RFCSP-0819-NEHSSL

SAN BENITO

TEXAS

SAN BENITO HIGH SCHOOL

REGISTERED ARCHITECT ROMY GABRIEL MENDEZ 23623 STATE OF TEXAS

COPYRIGHT 2019
GOMEZ MENDEZ SAENZ INC.
ARCHITECTS-PLANNERS

DATE	MAY, 2019
SCALE	As Shown
DRAWN	R GOMEZ IO
JOB	S5001119
SHEET	A2.03

C:\Users\Station 9\Dropbox\S5001119 SBISD HS & Sullivan\High School\A2.03.dwg

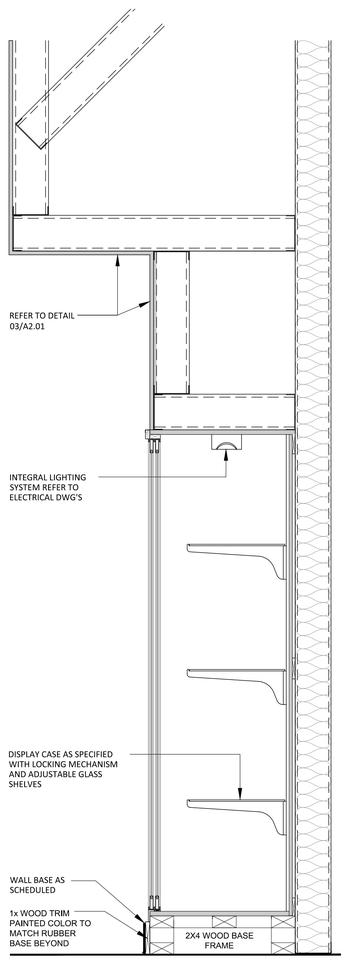

04 TROPHY CASE SECTION
SCALE 1/2" = 1'-0"

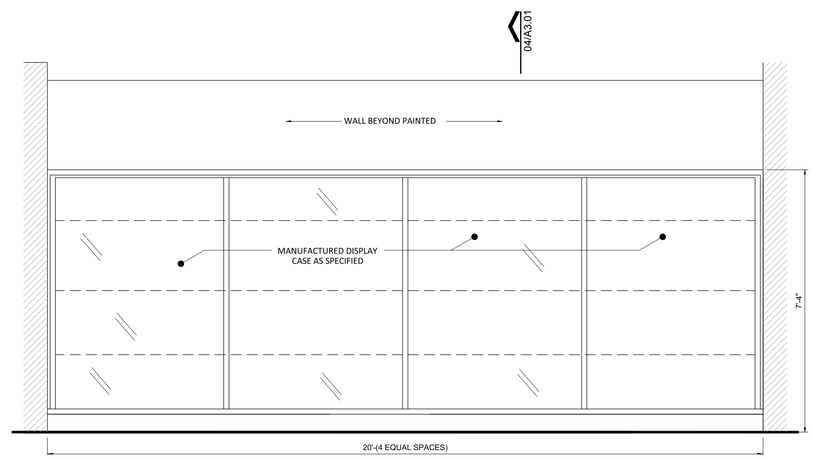

06 TROPHY CASE ELEVATION
SCALE 1/2" = 1'-0"

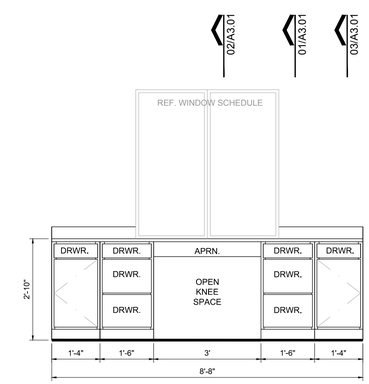

05 CABINET ELEVATION
SCALE 1/2" = 1'-0"

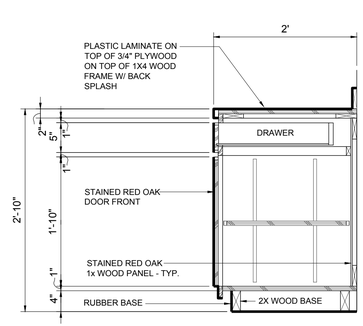

03 CABINET SECTION
SCALE 1" = 1'-0"

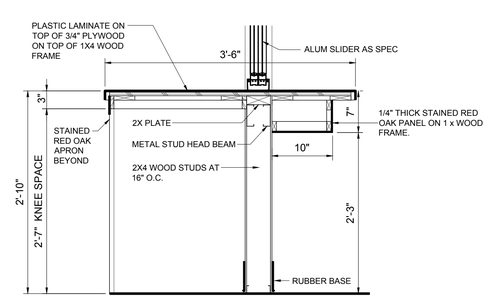

02 CABINET SECTION

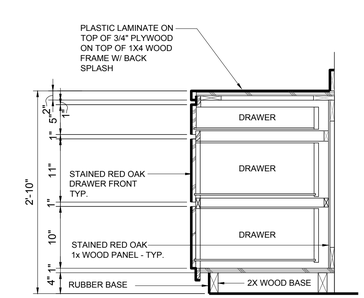

01 CABINET SECTION
SCALE 1" = 1'-0"

No.	REVISIONS	BY

GMS ARCHITECTS
1150 paredes line rd.
brownsville
texas 78526
(956) 546-0110
fax (956) 546-0196

RFCSP-0819-NEHSSL

SAN BENITO CISD
ADDITIONS AND RENOVATIONS AT SAN BENITO HS AND
SULLIVAN ELEMENTARY
RFCSP-0819-NEHSSL

SAN BENITO TEXAS

SAN BENITO
HIGH SCHOOL

COPYRIGHT 2019
GOMEZ MENDEZ SAENZ INC.
ARCHITECTS-PLANNERS

DATE	MAY, 2019
SCALE	As Shown
DRAWN	R GOMEZ IO
JOB	S5001119
SHEET	A3.01

C:\Users\Station 9\Dropbox\S5001119 SBISD HS & Sullivan\High School\r-ref-Master Plan.dwg

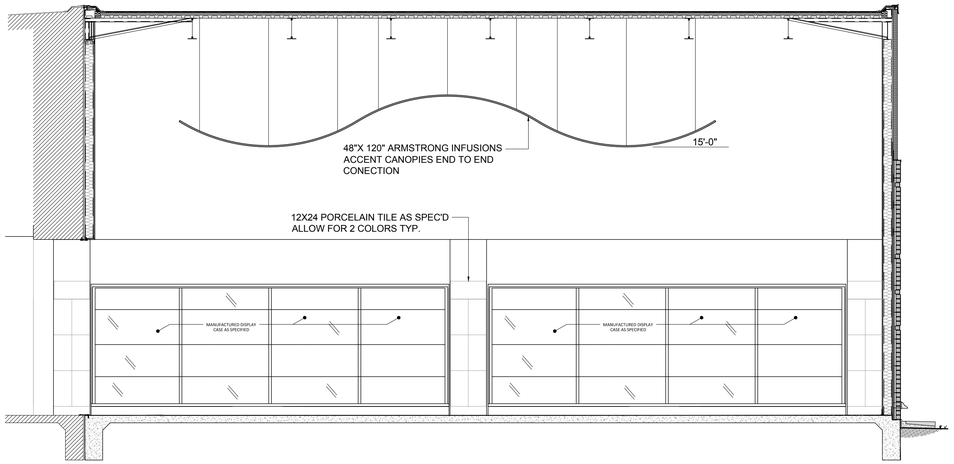

04 BUILDING SECTION

SCALE 1/4" = 1'-0"

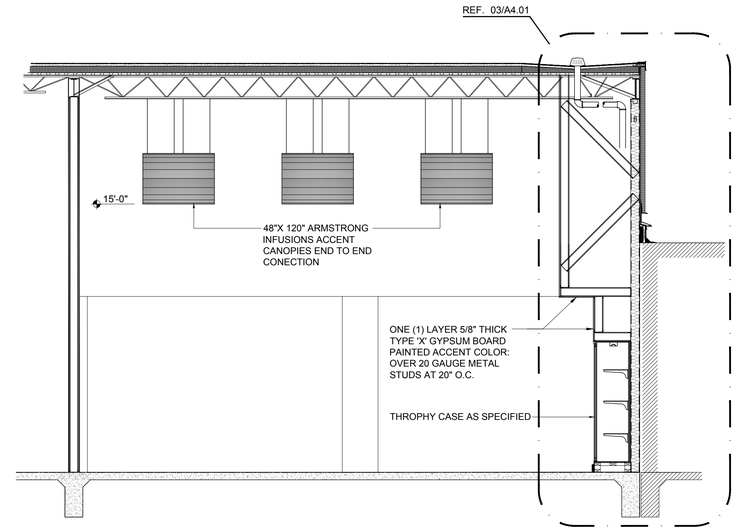

03 BUILDING SECTION

SCALE 1/4" = 1'-0"

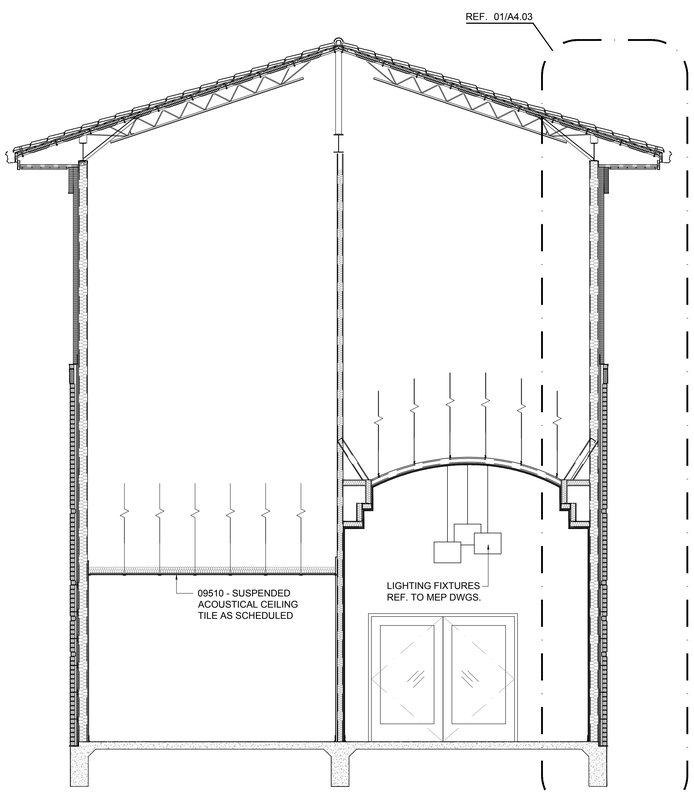

02 BUILDING SECTION

SCALE 1/4" = 1'-0"

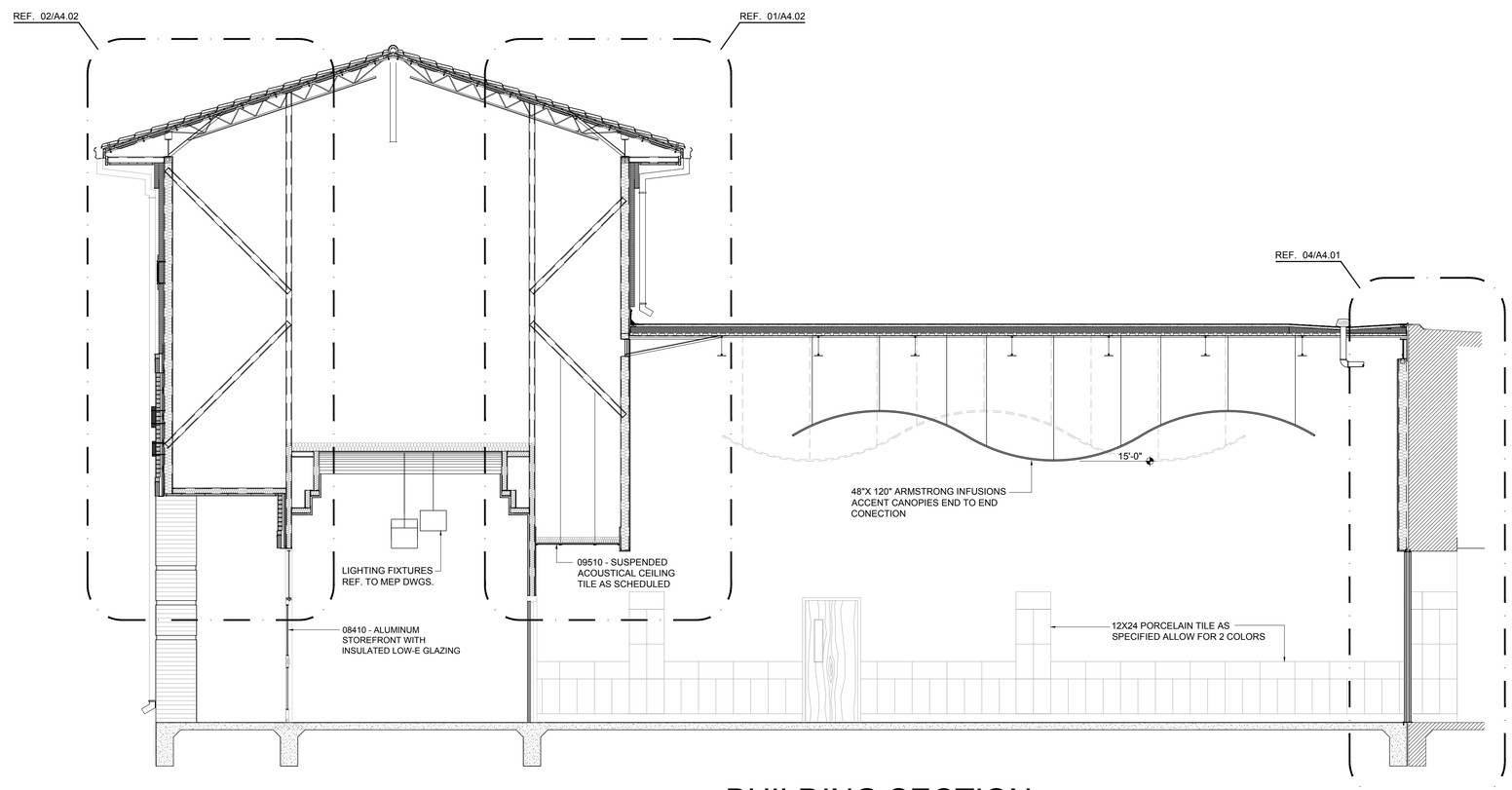

01 BUILDING SECTION

SCALE 1/4" = 1'-0"

No.	REVISIONS	BY

GMS ARCHITECTS

1150 paredes line rd.
brownsville
texas 78526
(956) 546-0110
fax (956) 546-0196

RFCSP-0819-NEHSSL

SAN BENITO CISD
ADDITIONS AND RENOVATIONS AT SAN BENITO HS AND
SULLIVAN ELEMENTARY
RFCSP-0819-NEHSSL

SAN BENITO TEXAS

SAN BENITO
HIGH SCHOOL

REGISTERED ARCHITECT
ROAN GABRIEL SAENZ
23625
STATE OF TEXAS

COPYRIGHT 2019
GOMEZ MENDEZ SAENZ INC.
ARCHITECTS-PLANNERS

DATE	MAY, 2019
SCALE	As Shown
DRAWN	R GOMEZ IO
JOB	S5001119
SHEET	A4.00

C:\Users\Station 9\Dropbox\S5001119 SBISD HS & Sullivan\High School\A4.01.dwg

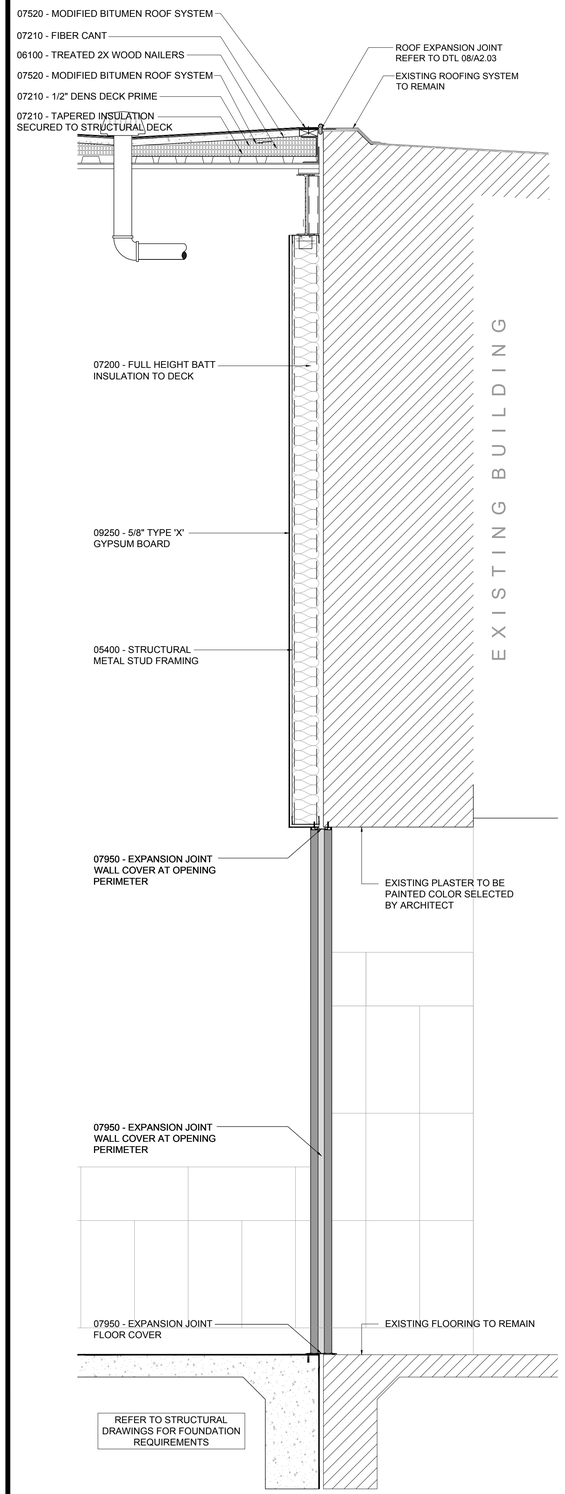

04 WALL SECTION

SCALE 3/4" = 1'-0"

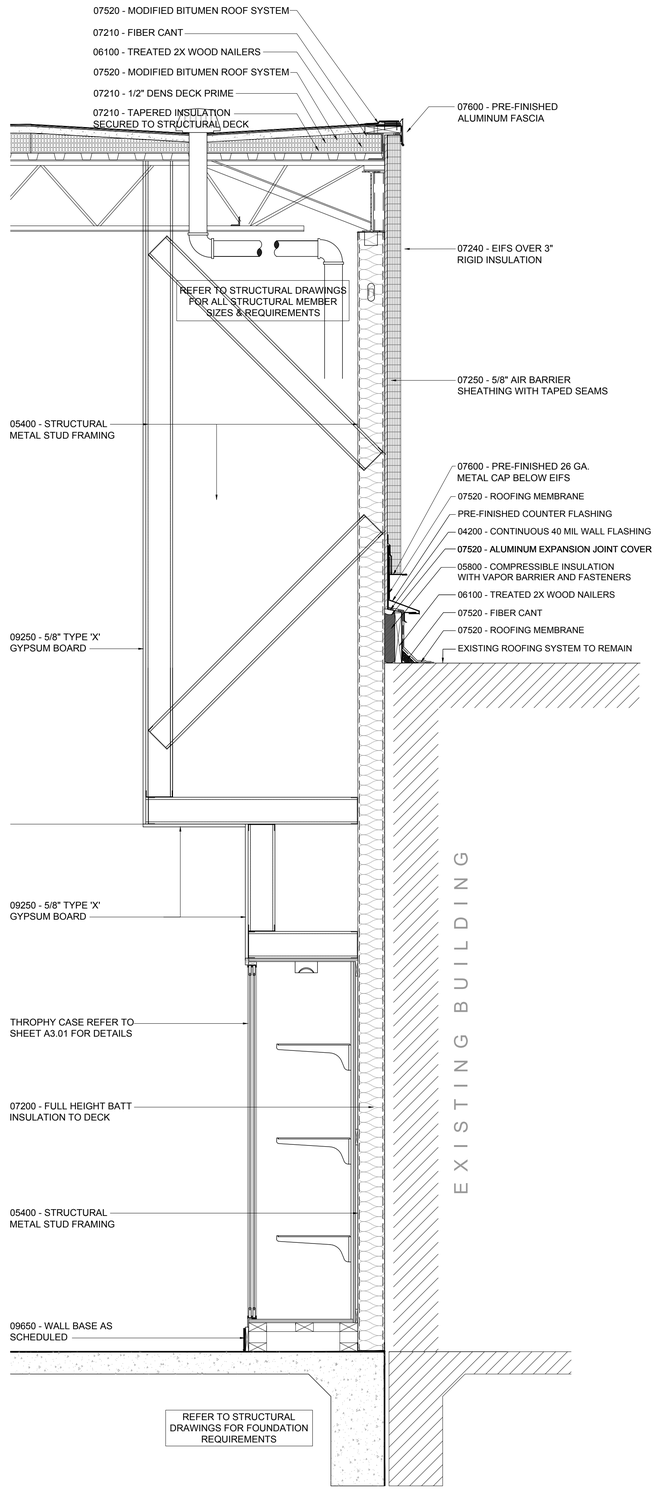

03 WALL SECTION

SCALE 3/4" = 1'-0"

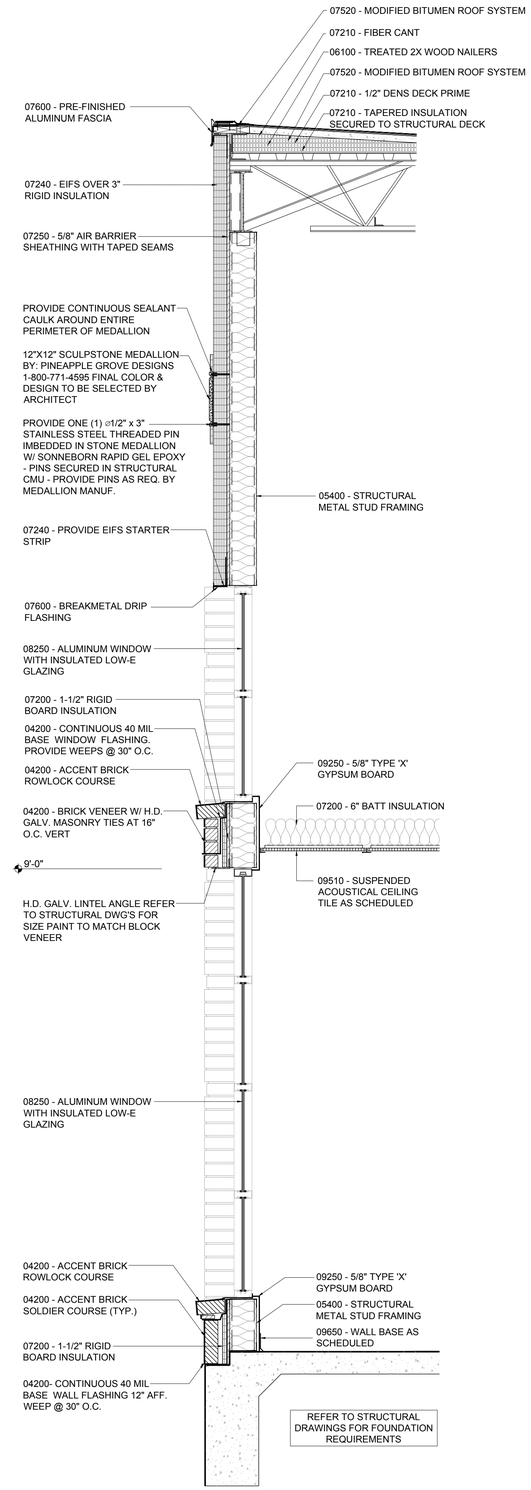

02 WALL SECTION

SCALE 3/4" = 1'-0"

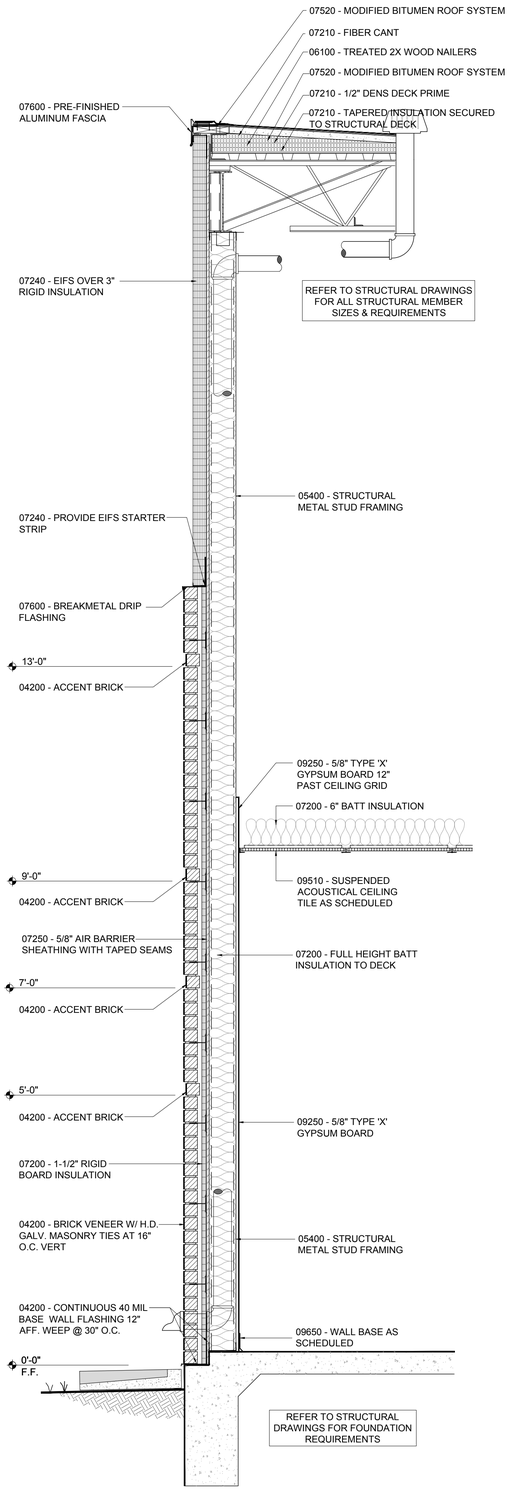

01 WALL SECTION

SCALE 3/4" = 1'-0"

No.	REVISIONS	BY

GMS ARCHITECTS

1150 paredes line rd.
brownsville
texas 78526
(956) 546-0110
fax (956) 546-0196

RFCSP-0819-NEHSSL

SAN BENITO CISD
ADDITIONS AND RENOVATIONS AT SAN BENITO HS AND SULLIVAN ELEMENTARY
RFCSP-0819-NEHSSL

SAN BENITO TEXAS

SAN BENITO HIGH SCHOOL

REGISTERED ARCHITECT RAMIRO GABRIEL MENDEZ 23625 STATE OF TEXAS

COPYRIGHT 2019
GOMEZ MENDEZ SAENZ INC.
ARCHITECTS-PLANNERS

DATE	MAY, 2019
SCALE	As Shown
DRAWN	R GOMEZ IO
JOB	S5001119
SHEET	A4.01

C:\Users\Station 9\Dropbox\S5001119 SBISD HS & Sullivan\High School\A4.01.dwg

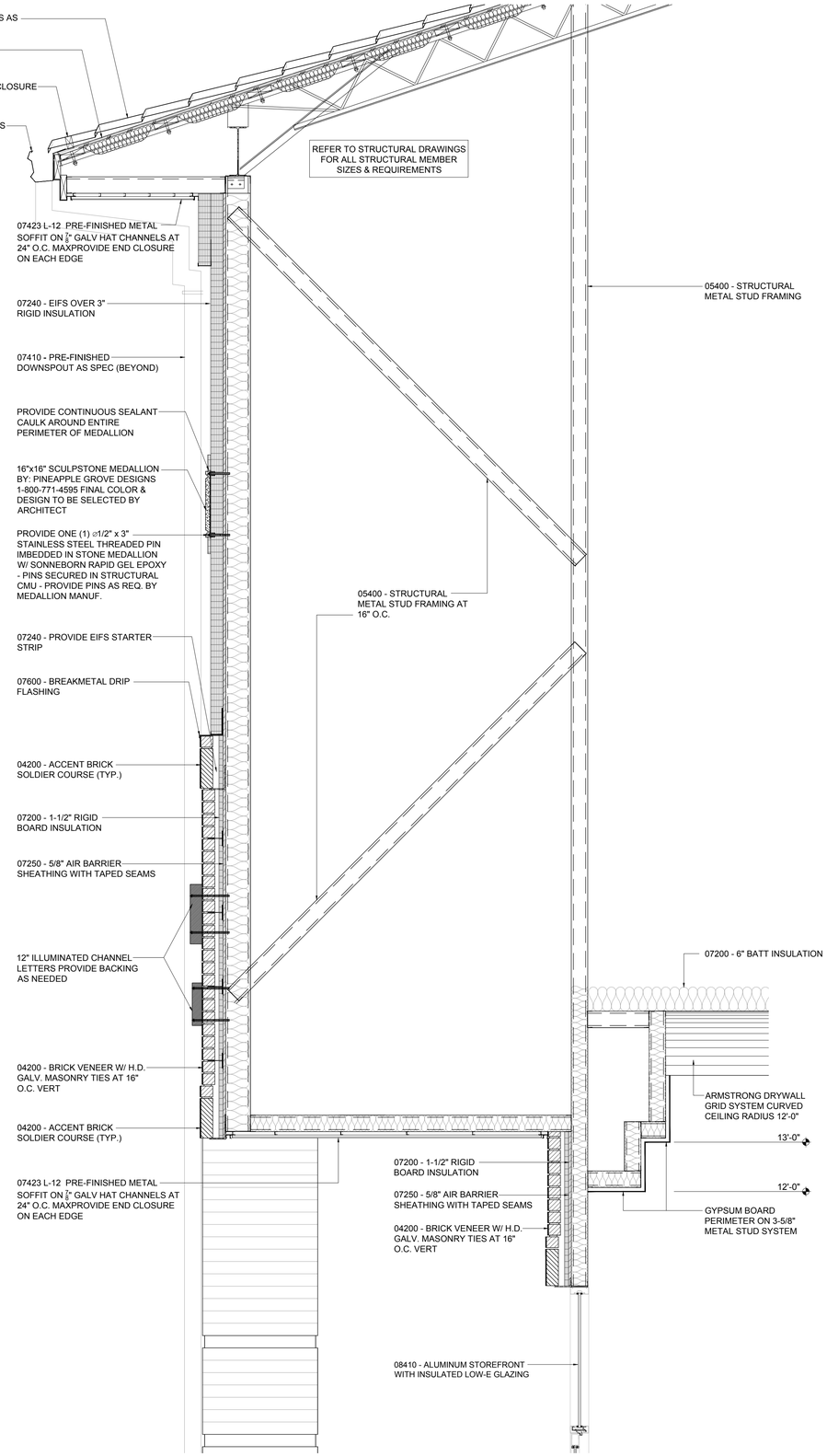

02 PARTIAL WALL SECTION

SCALE 3/4" = 1'-0"

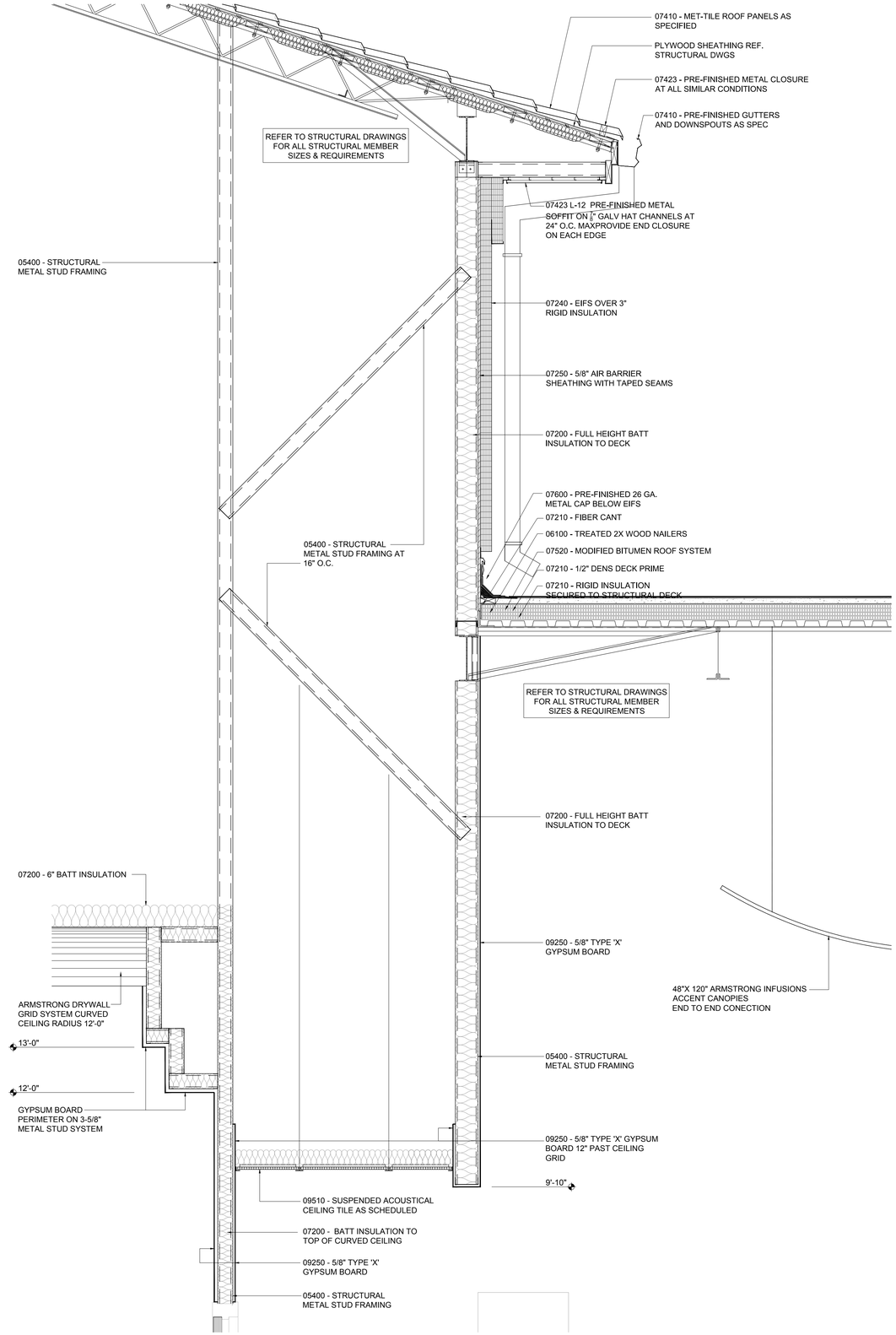

01 PARTIAL WALL SECTION

SCALE 3/4" = 1'-0"

No.	REVISIONS	BY

GMS ARCHITECTS

1150 paredes line rd.
brownsville
texas 78526
(956) 546-0110
fax (956) 546-0196

RFCSP-0819-NEHSSL

SAN BENITO CISD
ADDITIONS AND RENOVATIONS AT SAN BENITO HS AND SULLIVAN ELEMENTARY
RFCSP-0819-NEHSSL

SAN BENITO TEXAS

SAN BENITO HIGH SCHOOL

REGISTERED ARCHITECT RAMIRO GABRIEL GOMEZ 23625 STATE OF TEXAS

COPYRIGHT 2019
GOMEZ MENDEZ SAENZ INC.
ARCHITECTS-PLANNERS

DATE	MAY, 2019
SCALE	As Shown
DRAWN	R GOMEZ IO
JOB	S5001119
SHEET	A4.02

C:\Users\Station 9\Dropbox\S5001119 SBISD HS & Sullivan\High School\A4.01.dwg

PARTITION TYPES GENERAL NOTES

1. REFER TO FLOOR PLANS FOR LOCATION OF PARTITION TYPES.
2. REFER TO SCHEDULES & DETAILS FOR FINISHES,
3. REFER TO STRUCTURAL FOR METAL STUD FRAMING DESIGN REQUIREMENTS.
4. ALL GYPSUM WALLBOARD SHALL BE 5/8", TYPE "X", UNLESS NOTED OTHERWISE.
5. PROVIDE MOISTURE RESISTANT GYPSUM WALLBOARD AT TOILET/SHOWER WALLS AND THROUGHOUT KITCHEN, UNLESS NOTED OTHERWISE.
6. PROVIDE CEMENT TILE BACKER BOARD BEHIND ALL WALL TILE WAINSCOTS, IN LIEU OF M.R. WALLBOARD.
7. PROVIDE HI-IMPACT GYPSUM WALLBOARD AT ALL INTERIOR HALLWAYS, CORRIDORS, ETC., UNLESS NOTED OTHERWISE. PROVIDE HI-IMPACT BOARD TO A HEIGHT OF 8'-0" AFF AND THEN CONTINUE THE REMAINDER OF THE WALL WITH TYPE 'X' WALLBOARD TO DECK.
8. APPROPRIATE SUBMITTAL INFORMATION MUST BE PROVIDED TO SUBSTANTIATE THAT THE MATERIALS AND ASSEMBLY USED BY THE CONTRACTOR HAVE BEEN TESTED BY A RECOGNIZED TESTING AGENCY TO MEET THE FIRE RESISTANCE RATING SCHEDULED ON THESE PARTITION TYPES. SEE SPECIFICATION SECTION 08250.
9. REVIEW PLANS AND PROVIDE BACKING AND BRACING IN PARTITIONS AS REQUIRED FOR CASEWORK, WALL MOUNTED BOARDS, VERTICAL DUCT WORK AND ANY EQUIPMENT ETC. IF WOOD BLOCKING IS REQUIRED PROVIDE FIRE RETARDANT TREATED WOOD BLOCKING.
10. SOUND ATTENUATION BLANKETS SHALL EXTEND FULL HEIGHT OF PARTITIONS TO DECK.
11. ALL DOOR/WINDOW JAMBS & HEADERS IN MTL. STUD WALLS SHALL BE DOUBLE STUDDED.
12. PROVIDE WALLBOARD CONTROL JOINTS AT EACH COLUMN LOCATION AND WALL OPENINGS, TYPICAL BOTH FACES. PROVIDE CONTROL JOINTS AT WALL MIDPOINTS IN CONTINUOUS WALL LENGTHS OVER 30'-0".
13. ALL EXPOSED OUTSIDE CORNERS TO RECEIVE CORNER GUARDS AS SPECIFIED.
14. ALTHOUGH ALL INTERIOR PARTITIONS ON THIS SHEET ARE DRAWN TO SIMILAR HEIGHT IT IS RESPONSIBILITY OF THE CONTRACTOR TO RESEARCH ALL INTERIOR PARTITION WALL HEIGHTS FROM FINISHED FLOOR TO UNDERSIDE OF ROOF DECK.
15. PROVIDE WOOD BLOCKING AT ALL PROJECTOR, HANDRAIL, GRAB BAR AND CABINET LOCATIONS. 12" WIDE, 16 GAUGE STRAP SUPPORTS ARE ACCEPTABLE AT ALL OTHER BLOCKING LOCATIONS.

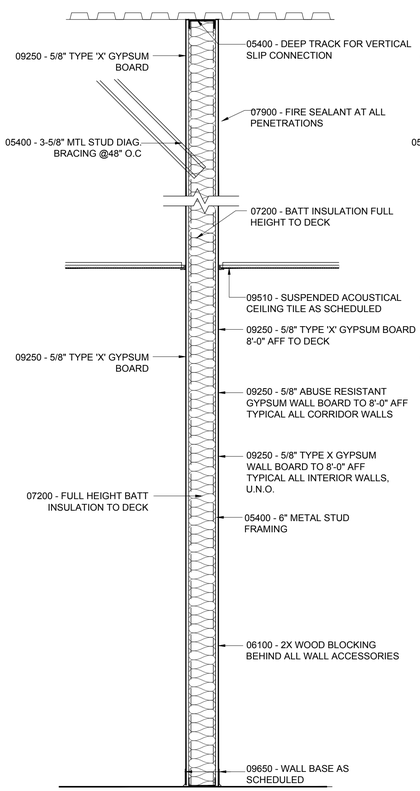

WALL SECTION A

SCALE 3/4" = 1'-0" A1- 3 5/8" STUD

AT INTERIOR CLASS ROOM WALLS, WITH THIS WALL TYPE, PROVIDE TYPE "X" DRYWALL AT EACH FACE - TYPICAL ALL LOCATIONS

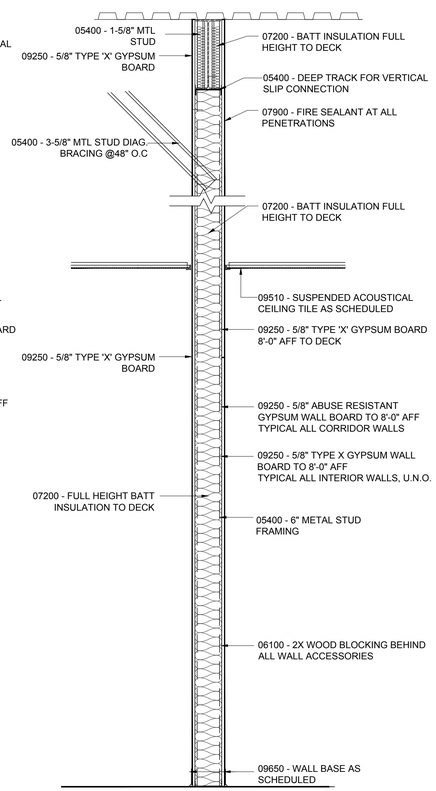

WALL SECTION B

SCALE 3/4" = 1'-0"

AT INTERIOR CLASS ROOM WALLS, WITH THIS WALL TYPE, PROVIDE TYPE "X" DRYWALL AT EACH FACE - TYPICAL ALL LOCATIONS

WHERE NO BEAM IS PRESENT, EXTEND TO UNDERSIDE OF DECK

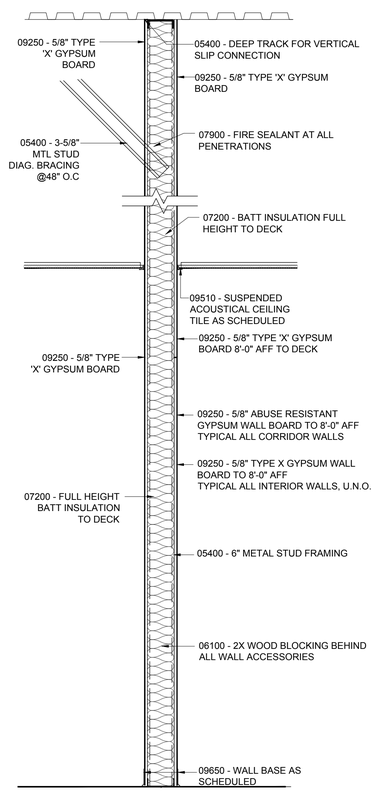

WALL SECTION D

SCALE 3/4" = 1'-0" D1-3-5/8" STUD

UL FIRE RESISTANT RATINGS:

INTERIOR PARTITION STEEL STUD (NON-LOAD BEARING) - UL DESIGN U465 1-HR
FIRE BARRIER RATING (REQUIRED) 1-HR

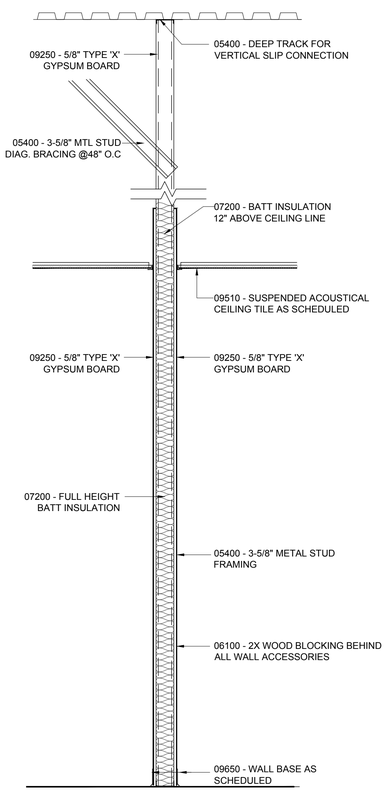

WALL SECTION F

SCALE 3/4" = 1'-0" F1-6" STUD

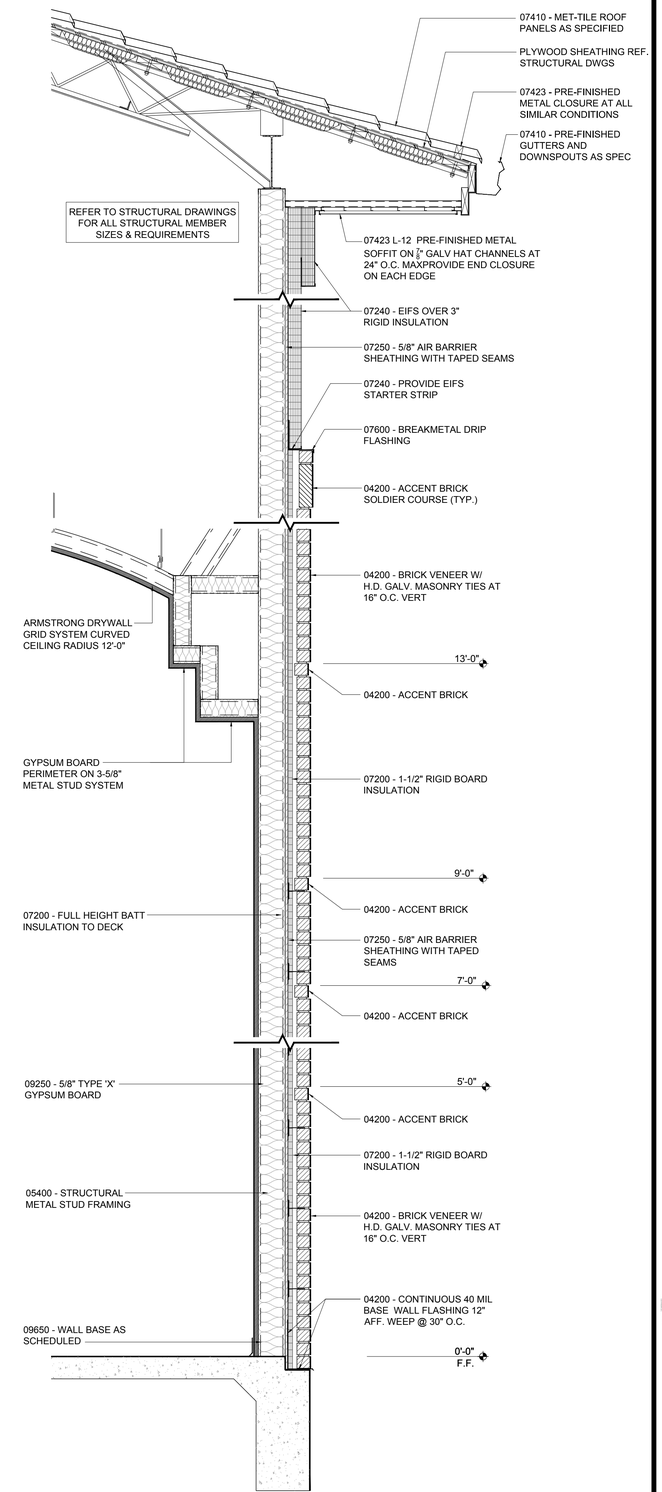

01 WALL SECTION

SCALE 3/4" = 1'-0"

No.	REVISIONS	BY

GMS ARCHITECTS

1150 paredes line rd.
brownsville
texas 78526
(956) 546-0110
fax (956) 546-0196

RFCSP-0819-NEHSSL

SAN BENITO CISD
ADDITIONS AND RENOVATIONS AT SAN BENITO HS AND SULLIVAN ELEMENTARY
RFCSP-0819-NEHSSL

SAN BENITO HIGH SCHOOL

TEXAS

REGISTERED ARCHITECT ROMY GABRIEL MENDEZ 23623 STATE OF TEXAS

COPYRIGHT 2019
GOMEZ MENDEZ SAENZ INC.
ARCHITECTS-PLANNERS

DATE	MAY, 2019
SCALE	As Shown
DRAWN	R GOMEZ IO
JOB	S5001119
SHEET	A4.03

C:\Users\Station 9\Dropbox\S5001119 SBISD HS & Sullivan\High School\A4.03.dwg

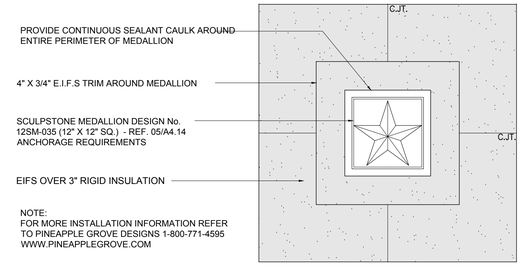

05 DETAIL ENLARGEMENT

NOT TO SCALE

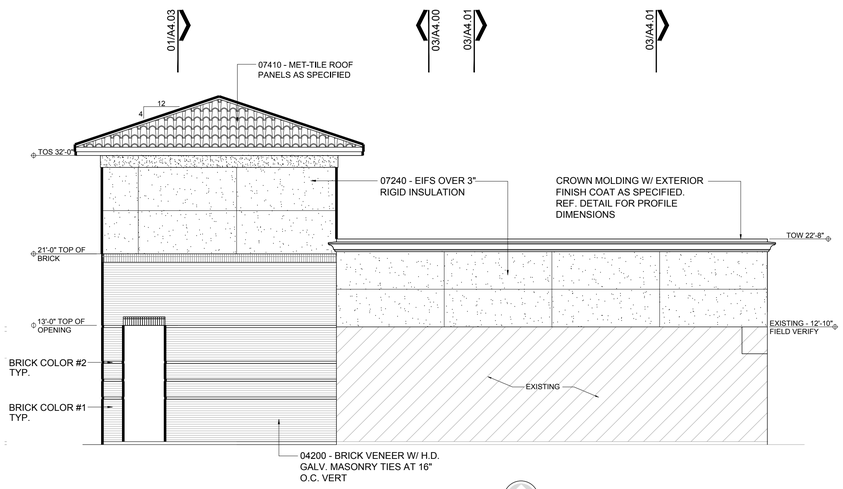

03 WEST ELEVATION

SCALE: 1/8" = 1'-0"

PLAN NORTH

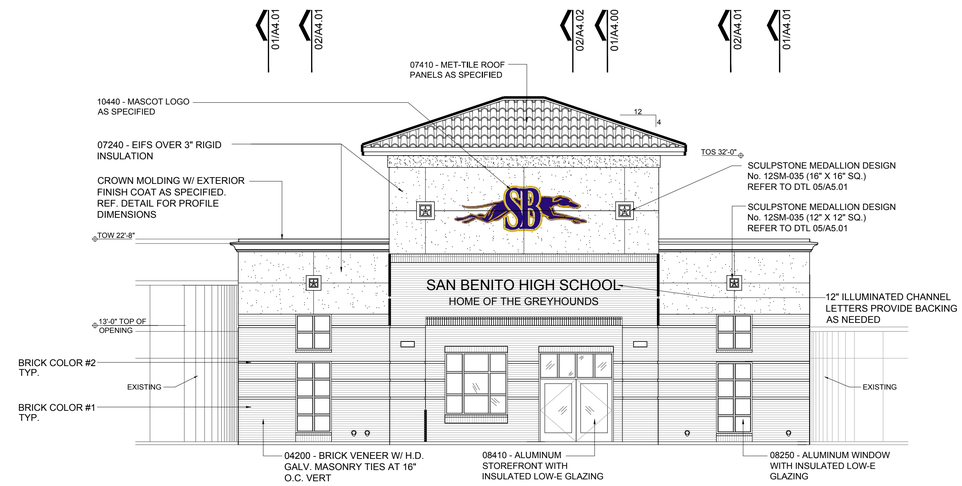

02 SOUTH ELEVATION

SCALE: 1/8" = 1'-0"

PLAN NORTH

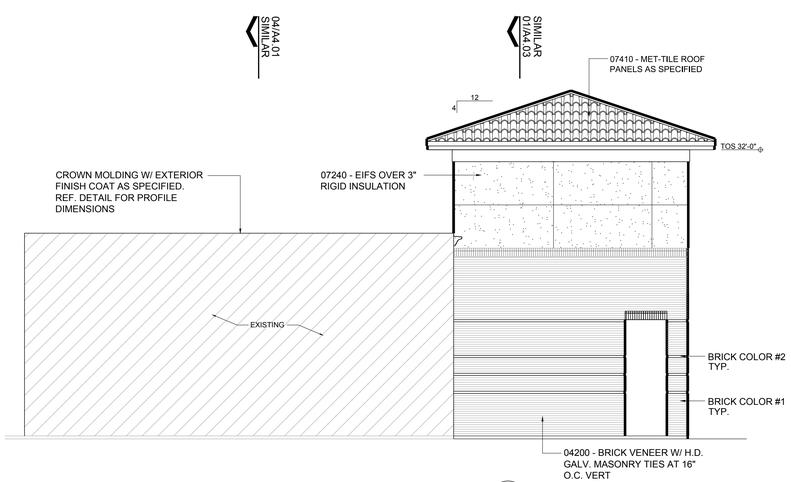

04 EAST ELEVATION

SCALE: 1/8" = 1'-0"

PLAN NORTH

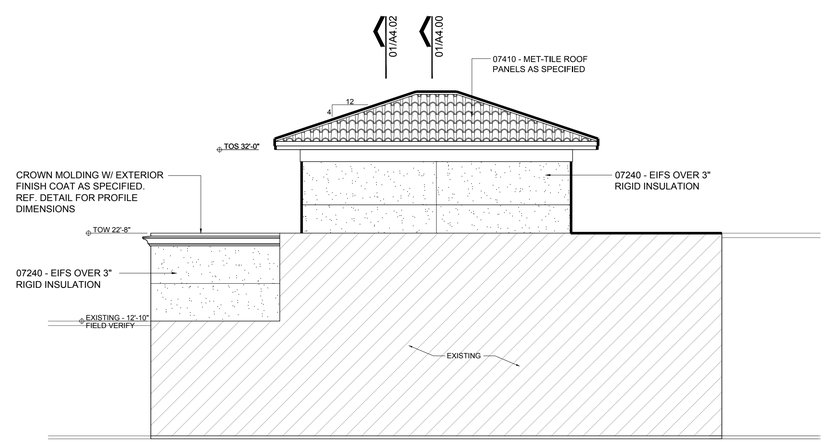

01 NORTH ELEVATION

SCALE: 1/8" = 1'-0"

PLAN NORTH

No.	REVISIONS	BY

GMS ARCHITECTS

1150 paredes line rd.
brownsville
texas 78526
(956) 546-0110
fax (956) 546-0196

RFCSP-0819-NEHSSL

SAN BENITO CISD
ADDITIONS AND RENOVATIONS AT SAN BENITO HS AND SULLIVAN ELEMENTARY
RFCSP-0819-NEHSSL

SAN BENITO TEXAS

SAN BENITO HIGH SCHOOL

REGISTERED ARCHITECT ROAN GABRIEL GOMEZ 23625 STATE OF TEXAS

COPYRIGHT 2019
GOMEZ MENDEZ SAENZ INC.
ARCHITECTS-PLANNERS

DATE	MAY, 2019
SCALE	As Shown
DRAWN	R GOMEZ IO
JOB	S5001119
SHEET	A5.01

C:\Users\Station 9\Dropbox\S5001119 SBISD HS & Sullivan\High School\r-ref-Master Plan.dwg

GENERAL STRUCTURAL NOTES

THESE GENERAL NOTES SHALL APPLY UNLESS OTHERWISE SPECIFICALLY NOTED ON PLANS OR DETAILS. THE CONTRACTOR SHALL VERIFY ALL DIMENSIONS AND SHALL COORDINATE ALL STRUCTURAL PLANS AND DETAILS WITH ARCHITECTURAL & MECHANICAL DRAWINGS BEFORE STARTING WORK. THE ENGINEER SHALL BE NOTIFIED OF ANY DISCREPANCIES PRIOR TO CONSTRUCTION. THE ENGINEER ASSUMES NO RESPONSIBILITY FOR CONTRACTOR MEANS AND METHODS OF CONSTRUCTION OR SITE SAFETY. DESIGN, CONSTRUCTION, WORKMANSHIP AND MATERIALS SHALL COMPLY WITH THE CONTROLLING PROVISIONS OF THE 2012 EDITION OF THE INTERNATIONAL BUILDING CODE (IBC).

DESIGN CRITERIA

1. BASIS FOR DESIGN AND CODE COMPLIANCE

   A. GOVERNING BUILDING CODE..............IBC 2012 EDITION

2. WIND DESIGN BASED ON THE GREATER OF:

   A. ASCE 7-10 REQUIREMENTS
   ULTIMATE DESIGN WIND SPEED..............150 MPH (Vasd=116 MPH)
   RISK CATEGORY..............III
   WIND EXPOSURE CATEGORY..............B
   INTERNAL PRESSURE COEFFICIENT (GCpi)..............+/-0.18
   Kzt..............1.0
   Kd..............0.85

   B. ASCE 7-05 REQUIREMENTS
   SERVICE DESIGN WIND SPEED..............110 MPH
   IMPORTANCE FACTOR..............1.15
   WIND EXPOSURE CATEGORY..............B
   INTERNAL PRESSURE COEFFICIENT (GCpi)..............+/-0.18
   Kzt..............1.0
   Kd..............0.85

3. GRAVITY DESIGN

   A. ROOF:
   DEAD LOAD..............SELF-WEIGHT OF STRUCTURE & ROOFING SYSTEM
   LIVE LOAD..............20 PSF
   ADDITIONAL POINT LOADS..............AS NOTED ON DRAWINGS

4. THESE BUILDINGS ARE DESIGNED TO MEET ASCE 7-05 & ASCE 7-10 WIND PRESSURES. ALL COMPONENTS AND CLADDINGS (E.G. WINDOWS, DOORS, ARCHITECTURAL SIDINGS AND ROOFING); MUST MEET MINIMUM WIND CODE REQUIREMENTS. IN ADDITION, GLAZED EXTERIOR OPENINGS IN THE LOWER 60 FEET OF THE BUILDING SHALL BE IMPACT RESISTANT MEETING ASTM E 1996 FOR LARGE MISSILES OR PROTECTED WITH AN IMPACT RESISTANT COVERING.

5. THE GENERAL CONTRACTOR MUST SUBMIT COMPONENT AND CLADDING WIND PRESSURE & IMPACT RESISTANCE RATINGS AND REQUIRED ATTACHMENT PROCEDURES TO THE STRUCTURAL ENGINEER FOR REVIEW. SUBMITTAL INFORMATION SHALL INCLUDE A THIRD PARTY TESTING REPORT OF THE SUBMITTED ASSEMBLY; REFERENCE EXTERIOR COMPONENTS & CLADDINGS NOTES FOR ADDITIONAL REQUIREMENTS. THE GENERAL CONTRACTOR SHALL CONTACT THE STRUCTURAL ENGINEER TO COORDINATE AND SCHEDULE REQUIRED PERIODIC INSPECTION OF EXTERIOR COMPONENTS AND CLADDINGS.

6. THE GENERAL CONTRACTOR IS RESPONSIBLE FOR PROVIDING CONSTRUCTION SERVICES AS NEEDED TO SATISFY THE REQUIREMENTS OF THE DRAWINGS, THE SPECIFICATIONS, THE REFERENCED BUILDING CODE AND THE TEXAS DEPARTMENT OF INSURANCE WINDSTORM INSPECTION PROGRAM. ALL CONSTRUCTION ADMINISTRATION COSTS ASSOCIATED WITH SUBMITTAL PREPARATION, SUBMITTAL REVIEW, INSPECTION COORDINATION, INCLUDING ALL GENERAL CONDITIONS, OVERHEAD AND PROFIT, SHALL BE INCLUDED IN THE GENERAL CONTRACTOR'S BID.

FOUNDATION DESIGN CRITERIA

1. FOUNDATION DESIGN IS IN ACCORDANCE WITH THE INTERNATIONAL BUILDING CODE, AND IS BASED ON THE VALUES RECOMMENDED IN TABLE 1806.2-PRESUMPTIVE LOAD-BEARING VALUES, AS LISTED BELOW:

   VERTICAL FOUNDATION PRESSURE..............1,500 PSF

   LATERAL BEARING PRESSURE..............100 PSF / FT BELOW GRADE

2. A GEOTECHNICAL ENGINEER OF RECORD SHALL BE RETAINED TO VERIFY THE ASSUMED PROPERTIES LISTED ABOVE.

FOUNDATION NOTES

1. REMOVE **AT LEAST 42 INCHES,** OF THE EXISTING SITE SOIL, VEGETATION, TREE ROOTS, DEBRIS, ETC., FROM THE PROPOSED BUILDING AREA TO A DISTANCE OF 5'-0" OUTSIDE THE BUILDING AREA (EXTERIOR OF THE FOUNDATION, INCLUDING ATTACHED IMPROVEMENTS SUCH AS SIDE WALKS AND CANOPIES). DEPTH OF REMOVAL SHALL BE VERIFIED BY THE GEOTECHNICAL ENGINEER AT THE TIME OF CONSTRUCTION.

2. AFTER TOP SOIL HAS BEEN REMOVED, THE SUBGRADE SHALL BE PROOF-ROLLED WITH APPROPRIATE CONSTRUCTION EQUIPMENT WEIGHING AT LEAST 20 TONS UNTIL THE GRADE OFFERS A RELATIVELY UNYIELDING SURFACE. SOFT SOIL AND YIELDING AREAS, AND AREAS WHERE TREE ROOTS HAVE BEEN REMOVED, SHALL BE OVER EXCAVATED AND REPLACED WITH COMPACTED SELECT FILL IN ACCORDANCE WITH THE REQUIREMENTS BELOW. ALTERNATIVELY, SOFT SOIL AND YIELDING AREAS MAY BE TREATED WITH HYDRATED LIME OR PORTLAND CEMENT PER THE GEOTECHNICAL REPORT REQUIREMENTS.

3. PROOFROLLING OPERATIONS AND EXCAVATION/BACKFILL ACTIVITIES SHOULD BE PERFORMED DURING A PERIOD OF DRY WEATHER AND OBSERVED BY THE GEOTECHNICAL ENGINEER OR HIS REPRESENTATIVE TO DOCUMENT SUBGRADE CONDITIONS AND PREPARATION. IF SUBGRADE SOILS ARE ALLOWED TO BECOME WET OR SATURATED, REMOVAL AND REPLACEMENT OF SOFT SOILS OR LIME STABILIZATION PROCEDURES SHALL BE PERFORMED AT THE CONTRACTOR'S EXPENSE. THE GEOTECHNICAL ENGINEER SHALL BE CONTACTED FOR ADDITIONAL RECOMMENDATIONS, IF REQUIRED.

4. SCARIFY, MOISTURE CONDITION, AND COMPACT THE TOP 6" OF THE EXPOSED SUBGRADE TO 98% OF STANDARD PROCTOR MAXIMUM DRY DENSITY AT OPTIMUM TO +3% ABOVE THE OPTIMUM MOISTURE CONTENT, IN ACCORDANCE WITH TEST METHOD ASTM D-698. MOISTURE CONTENT SHALL BE AS NOTED IMMEDIATELY PRIOR TO PLACING SELECT FILL.

5. RESTORE GRADE USING SELECT FILL, **MINIMUM OF 42 INCHES** OR AS REQUIRED TO PROVIDE THE SPECIFIED **FINISH FLOOR ELEVATION,** WHICHEVER IS GREATER, AND PROPER SITE DRAINAGE, COMPACTED IN ACCORDANCE WITH THE REQUIREMENTS BELOW. FINISH FLOOR ELEVATIONS SHALL BE VERIFIED WITH ARCHITECT AND CIVIL ENGINEER.

6. SELECT FILL SHALL BE COMPACTED IN THE FIELD IN LIFTS NOT TO EXCEED 8" LOOSE MEASURE (6" COMPACTED LIFT) TO A MINIMUM OF 98% OF STANDARD PROCTOR MAXIMUM DRY DENSITY AT -2% TO +2% OF THE OPTIMUM MOISTURE CONTENT, AS EVALUATED BY ASTM D-698.

7. SELECT FILL MATERIALS SHALL BE CLAYEY SAND (SC), CLAYEY GRAVEL (GC) OR LEAN CLAY (CL), AND COMBINATIONS OF THESE SOILS, WHEN CLASSIFIED IN ACCORDANCE WITH USCS ASTM D2487. SELECT FILL SHALL HAVE A LIQUID LIMIT (LL) LESS THAN 35%, A PLASTICITY INDEX (PI) BETWEEN 7-17 AND NO PARTICLES LARGER THAN 2" IN DIAMETER. IF BLENDED OR MIXED SOILS ARE INTENDED FOR USE, THE GEOTECHNICAL ENGINEER SHOULD BE CONTACTED TO PROVIDE ADDITIONAL RECOMMENDATIONS AND REQUIREMENTS, INCLUDING APPROVAL TO UTILIZE BLENDED OR MIXED SOILS.

8. FOUNDATION CONCRETE SHALL NOT BE PLACED ON SELECT FILL SOILS THAT HAVE BEEN DISTURBED BY RAINFALL OR WATER SEEPAGE. IF BEARING SOILS ARE SOFTENED BY WATER INTRUSION, OR BY DESICCATION, THE UNSUITABLE SOILS SHALL BE REMOVED FROM THE FOUNDATION EXCAVATION AND BE REPLACED WITH PROPERLY COMPACTED SELECT FILL PRIOR TO PLACEMENT OF FOUNDATION CONCRETE. ALL SOIL REMOVAL AND REPLACEMENT COSTS, INCLUDING ASSOCIATED COSTS TO REMOVE AND REINSTALL REINFORCEMENT AND VAPOR BARRIER MATERIALS, SHALL BE THE SOLE RESPONSIBILITY OF THE GENERAL CONTRACTOR. DEPTH OF SOIL REMOVAL AND RECOMPACTION REQUIREMENTS SHALL BE COORDINATED WITH THE GEOTECHNICAL ENGINEER.

9. SAMPLES OF PROPOSED SELECT FILL SHALL BE FURNISHED TO THE TESTING LABORATORY 7 DAYS PRIOR TO INSTALLATION TO PERMIT TIME FOR SPECIFICATION COMPLIANCE INSPECTION AND REVIEW BY THE GEOTECHNICAL ENGINEER.

10. LABORATORY MOISTURE-DENSITY CURVES SHALL BE DEVELOPED FOR SUBGRADE AND FILL. PROCTOR CURVES AND FIELD DENSITY TESTS SHALL BE SUBMITTED TO THE ENGINEER FOR REVIEW. A MINIMUM OF ONE (1) IN PLACE DENSITY TEST PER 2,000 SQUARE FEET OF SLAB AREA SHALL BE TAKEN ON EACH LIFT DURING PLACEMENT OF SELECT FILL. DENSITY REPORTS SHALL BE TRANSMITTED TO ENGINEER WITHIN 3 DAYS AFTER TESTS ARE MADE.

FOUNDATION NOTES CONTINUED:

11. GRAIN SIZE ANALYSIS AND ATTERBERG LIMITS TESTS SHALL BE PERFORMED DURING FILL PLACEMENT AT A RATE OF ONE TEST PER 2,000 CUBIC YARDS OF FILL BROUGHT TO THE SITE. SAMPLES FOR TEST SHALL BE TAKEN FROM JOBSITE MATERIALS.

12. SITE SHALL BE GRADED SO THAT WATER DOES NOT POND WITHIN 10 FEET OF THE PERIMETER FOUNDATION BEAM DURING OR AFTER CONSTRUCTION. THE SLOPE OF THE GROUND SURFACE AWAY FROM THE STRUCTURE SHOULD BE A MINIMUM OF FIVE (5%) PERCENT FOR A DISTANCE OF AT LEAST TEN (10') FEET. ELEVATION OF GROUND SURFACE ADJACENT TO THE FOUNDATION SHOULD BE AT LEAST 6 INCHES BELOW FINISH FLOOR.

13. FINAL DRAINAGE IS VERY IMPORTANT TO THE PERFORMANCE OF THE FOUNDATION. LANDSCAPING, PLUMBING, AND DOWNSPOUT DRAINAGE ARE ALSO VERY IMPORTANT. IT IS VITAL THAT ALL ROOF DRAINAGE BE TRANSPORTED AWAY FROM BUILDINGS SO THAT NO AREAS OF WATER POND AROUND BUILDINGS, WHICH CAN RESULT IN SOIL VOLUME CHANGE UNDER THE FOUNDATION. PLUMBING LEAKS SHOULD BE REPAIRED AS SOON AS POSSIBLE IN ORDER TO MINIMIZE THE MAGNITUDE OF MOISTURE CHANGE UNDER THE SLAB. LARGE TREES AND SHRUBS SHOULD NOT BE PLANTED IN THE IMMEDIATE VICINITY OF THE STRUCTURE, SINCE THE ROOT SYSTEMS CAN CAUSE A SUBSTANTIAL REDUCTION IN SOIL VOLUME IN THE VICINITY OF THE TREE DURING DRY PERIODS. BUSHES AND TREES SHOULD BE PLANTED A REASONABLE DISTANCE AWAY FROM THE STRUCTURE SO THAT THEIR CANOPY OR "DRIP LINE" DOES NOT EXTEND BEYOND THE PERIMETER OF THE FOUNDATION. WATERING OF VEGETATION SHOULD BE PERFORMED IN A TIMELY AND CONTROLLED MANNER. PROLONGED WATERING SHOULD BE AVOIDED.

CONCRETE:

1. ALL CONCRETE WORK SHALL CONFORM TO THE AMERICAN CONCRETE INSTITUTE SPECIFICATION, A.C.I. #301 AND BUILDING CODE REQUIREMENTS, A.C.I. #318, LATEST EDITION.

2. ALL DETAILING, FABRICATION AND ERECTION OF REINFORCING BARS, UNLESS OTHERWISE NOTED, MUST FOLLOW THE A.C.I. "MANUAL OF STANDARD PRACTICE FOR DETAILING REINFORCED CONCRETE", A.C.I. #315, LATEST EDITION.

3. CONCRETE SHALL HAVE A MINIMUM COMPRESSION STRENGTH OF 3,000 PSI AT 28 DAYS.

4. A MAXIMUM OF 25% FLYASH MAY BE USED AS A CEMENT SUBSTITUTE AND SHALL CONFORM TO ASTM C618, CLASS C. THE WATER/CEMENT RATIO SHALL NOT EXCEED 0.6 AND SLUMPS SHALL BE 5 INCHES (±1 INCH). AGGREGATE SHALL BE WELL-GRADED, 1" MAXIMUM FOR THE SLAB ON GRADE, 1" MAXIMUM FOR CAST-IN-PLACE BEAMS AND ABOVE GRADE SLABS. COARSE AGGREGATE SHALL MEET ASTM C33, GRADATION #57. A QUALIFIED TESTING LABORATORY SHALL BE RETAINED TO FURNISH MIX DESIGNS FOR ALL CLASSES OF CONCRETE. A SAMPLE OF FOUR CYLINDERS SHALL BE TAKEN NOT LESS THAN ONCE A DAY, NOR LESS THAN ONCE FOR EACH 100 YD3 OF CONCRETE. ONE CYLINDER SHALL BE TESTED AT 7 DAYS AND TWO AT 28 DAYS. THE FOURTH CYLINDER MAY BE DISPOSED OF AFTER 45 DAYS IF NOT USED.

5. ADMIXTURES CONTAINING WATER SOLUBLE CHLORIDE IONS GREATER THAN 0.06% BY WEIGHT OF CEMENT SHALL NOT BE USED.

6. REINFORCING BARS SHALL BE NEW BILLET STEEL CONFORMING TO ASTM A-615, GRADE 60. #3 BARS MAY BE GRADE 40.

7. WELDED WIRE FABRIC SHALL BE ASTM A185.

8. STANDARD PROTECTIVE COVER OF REINFORCING BARS UNLESS OTHERWISE NOTED SHALL BE:

   WHERE CAST AGAINST DIRT OR FILL.......... 3 IN.
   EXPOSED TO EARTH OR WEATHER.......... 2 IN.
   SLABS AND WALLS.......... 1 IN.
   OTHER.......... 1-1/2 IN.

9. ALL ACCESSORIES SHALL BE IN ACCORDANCE WITH THE A.C.I. "MANUAL OF STANDARD PRACTICE FOR DETAILING REINFORCED CONCRETE", A.C.I. #315, LATEST EDITION.

10. SLAB MAT TO BE SUPPORTED BY MASONRY BRICK BATTS (MIN OF 1/2 BRICK) SPACED AT 4 FEET ON CENTER EACH WAY (MAX). BEAM CAGES SUPPORTED BY BATTS AT 4 FEET ON CENTER.

11. VERTICAL CONSTRUCTION JOINTS IN FLOOR SHALL BE COORDINATED WITH STRUCTURAL ENGINEER PRIOR TO FORMING SLAB. CRACK CONTROL JOINTS SHALL BE PROVIDED AT LOCATIONS SHOWN ON THE PLANS. CONTROL JOINTS SHALL BE SAWCUT (IMMEDIATELY SUBSEQUENT TO FINISHING SLAB) WITH "SOFF-CUT" SYSTEM. JOINTS SHALL BE CLEANED AND FILLED WITH "SONOLASTIC SL1" WITHIN TWO (2) DAYS AFTER SAWCUTTING. NO HORIZONTAL JOINTS WILL BE PERMITTED IN SLABS OR BEAMS UNLESS APPROVED BY THE ENGINEER.

12. PROVIDE 2 TOP & BOTTOM CORNER BARS AT ALL DISCONTINUOUS GRADE BEAMS AND FOUNDATION CORNERS. CORNER BARS SHALL BE 4'-0" IN LENGTH (2'-0" LEGS). SIZE OF THE CORNER BARS SHALL MATCH THE SIZE OF THE GRADE BEAM REINFORCING AS SHOWN BY STRUCTURAL DRAWINGS.

13. MAINTAIN A MINIMUM OF ONE AND ONE-HALF (1-1/2) TIMES THE MAXIMUM COARSE AGGREGATE SIZE BETWEEN ALL REINFORCING BARS (EXCEPT AT LAPS).

14. BARS SCHEDULED OR DETAILED "CONT" SHALL BE LAPPED 62 BAR DIAMETERS (36 INCHES MINIMUM) UNLESS OTHERWISE NOTED.

15. WHERE CONCRETE IS TO HAVE UNEXPOSED SURFACES, THE FORMS MAY BE CONSTRUCTED OF #2 LUMBER OR BETTER. WHERE SURFACES ARE EXPOSED, SUCH AS FOR FINISH PAINTING OR STUCCO DASH, THE FORMS SHALL BE COMMERCIAL STANDARD DOUGLAS FIR, MOISTURE-RESISTANT CONCRETE FORM PLYWOOD; MINIMUM 5-PLY AND AT LEAST 9/16" THICK, OR FORMS LINED WITH COMMERCIAL STANDARD DOUGLAS FIR, CONCRETE FORM EXTERIOR, 3-PLY, NOT LESS THAN 1/4" THICK. WHERE CONCRETE IS EXPOSED, A SMOOTH SURFACE IS REQUIRED, FREE FROM FINS, HONEYCOMB, FORM MARKS OR OTHER DEFECTS.

16. EXPOSED SURFACES OF CONCRETE AT THE PERIMETER OF THE FOUNDATION SHALL BE FORMED WITH 2X10 #2 LUMBER OR BETTER. A SMOOTH SURFACE IS REQUIRED, FREE FROM FINS, HONEYCOMB, FORM MARKS OR OTHER DEFECTS.

17. CONSTRUCT FORMS SO THAT JOINTS ARE LEAKPROOF. MAINTAIN FORMS SUFFICIENTLY RIGID TO PREVENT DEFORMATION UNDER LOAD.

18. CONCRETE MAY BE PLACED WITH CHUTES UP TO 25' MAXIMUM. SLUMP SHALL NOT EXCEED 6" AT TRUCK DISCHARGE POINT.

19. CONCRETE PLACED BY PUMPING SHALL MEET THE FOLLOWING REQUIREMENTS:

   A. COARSE AGGREGATE SHALL BE GRADED FROM A MAXIMUM OF 1" DOWN

   B. MAXIMUM ALLOWABLE INCREASE IN CEMENT FACTOR SHALL BE 1/2 SACK PER CUBIC YARD OVER NORMAL MIX DESIGN.

   C. MAXIMUM WATER CEMENT RATIO SHALL BE 7-1/2 GALLONS PER SACK OF CEMENT. IF MORE WORKABILITY IS REQUIRED, AN ADMIXTURE MAY BE USED.

   D. MAXIMUM WEIGHT RATIO OF FINE AGGREGATES TO COARSE AGGREGATES SHALL NOT EXCEED 2/3.

   E. REFER TO A.C.I. #301, LATEST EDITION, SECTION 800, FOR OTHER PUMPING REQUIREMENTS.

   F. IN NO CASE SHALL CONCRETE BE PUMPED THROUGH AN ALUMINUM TUBE.

   G. SLUMP SHALL NOT EXCEED 6" AT TRUCK DISCHARGE POINT.

20. FLOOR FINISH (TOLERANCES)

   A. STEEL TROWEL FINISH 1/8" IN 10'

   B. FLOAT FINISH 1/4" IN 10'

   C. SCRATCH FINISH 1/2" IN 10'

21. CONCRETE TO BE CURED IN ACCORDANCE WITH ACI RECOMMENDATIONS. PROPOSED METHOD OF CURING TO BE COORDINATED WITH ENGINEER PRIOR TO CONCRETE PLACEMENT.

22. SHOP DRAWINGS SHALL BE PREPARED FOR ALL REINFORCING STEEL AND SUBMITTED FOR REVIEW BY ENGINEER. SUBMITTALS SHALL INCLUDE ELECTRONIC (PDF) COPIES OF EACH DRAWING. ENGINEERING DRAWINGS SHALL NOT BE REPRODUCED AND USED AS SHOP DRAWINGS.

23. THE CONTRACTOR SHALL REVIEW AND ANNOTATE SHOP DRAWINGS BEFORE SUBMITTING THEM TO THE ARCHITECT/ENGINEER FOR REVIEW. THE CONTRACTOR SHALL ALLOW ARCHITECT/ENGINEER 10 WORKING DAYS FOR REVIEW OF SHOP DRAWINGS.

24. ENGINEER TO BE NOTIFIED 48 HOURS PRIOR TO PLACEMENT OF FOUNDATION AND OF STRUCTURAL CONCRETE TO SCHEDULE REQUIRED OBSERVATIONS.

CONCRETE CONTINUED:

25. INCLUDE IN BID AN ALLOWANCE FOR **1.0 TON** OF REINFORCING BARS TO BE USED AS DIRECTED IN FIELD FOR SPECIAL CONDITIONS AT A COST OF **$2,000.00 PER TON** (LABOR FOR PLACING SAME TO BE INCLUDED). ANY UNUSED ALLOWANCE WILL BE CREDITED TO THE OWNER AT THE END OF THE PROJECT.

STRUCTURAL STEEL

1. TOP OF BEAM/PLATE (TOB OR TOP) IS USED INTERCHANGEABLY ON PLANS. REFERENCE APPLICABLE SECTION FOR CLARIFICATION.

2. STRUCTURAL STEEL WIDE FLANGE MEMBERS SHALL CONFORM TO ASTM SPECIFICATION A 572 AND/OR ASTM A 992 (Fy = 50 KSI) UNLESS OTHERWISE SHOWN OR NOTED. PLATE AND ANGLES MAY BE A36 (Fy = 36 KSI).

3. ALL STRUCTURAL STEEL TUBING SHALL CONFORM TO ASTM SPECIFICATION A-500, GRADE B (Fy=46 KSI). STEEL PIPE SHALL COMPLY WITH ASTM A53 TYPE E OR S (Fy=35 KSI).

4. ALL STRUCTURAL STEEL SHALL BE DESIGNED, FABRICATED AND ERECTED IN ACCORDANCE WITH THE LATEST SPECIFICATIONS OF THE AMERICAN INSTITUTE OF STEEL CONSTRUCTION AND STEEL JOIST INSTITUTE.

5. ALL STEEL BAR JOISTS SHALL BE DESIGNED AND FABRICATED BY A MEMBER OF THE STEEL JOIST INSTITUTE. IF REQUESTED BY THE A/E, THE CONTRACTOR SHALL PROVIDE WRITTEN CERTIFICATE OF FABRICATOR'S MEMBERSHIP TO THE STEEL JOIST INSTITUTE AT TIME OF SHOP DRAWING SUBMITTAL.

6. BAR JOISTS SHALL BE BOLTED WHERE COLUMNS ARE FRAMED WITH STRUCTURAL STEEL MEMBERS IN ONLY ONE DIRECTION TO PROVIDE LATERAL STABILITY DURING CONSTRUCTION/ERECTION AS REQUIRED BY OSHA.

7. TOTAL LOAD DEFLECTION OF SPECIAL BAR JOIST SHALL NOT EXCEED L/240, UNLESS NOTED OTHERWISE.

8. JOIST MANUFACTURER SHALL PROVIDE BRIDGING AS REQUIRED TO ADEQUATELY BRACE JOISTS AGAINST LATERAL MOVEMENT AND NET UPLIFT OF 30 PSF.

9. ALL BOLTS SHALL BE 3/4 DIAMETER ASTM A325. WASHERS SHALL BE PROVIDED AT OVERSIZED HOLES AND AT SLOTTED CONNECTIONS AT EXPANSION JOINTS. A325 CONNECTIONS SHALL BE BEARING TYPE CONNECTIONS UNLESS NOTED OTHERWISE. ANCHOR BOLTS MAY BE ASTM A307 UNLESS NOTED OTHERWISE.

10. REFER TO ARCHITECTURAL & MECHANICAL PLANS FOR VERIFICATION OF ALL BOLTS, BLOCKING ANCHORS, ETC., FOR THE ANCHORAGE OF THEIR RESPECTIVE ITEMS.

11. ALL BEAMS AND COLUMNS SHALL BE FULL LENGTH WITHOUT SPLICES UNLESS INDICATED ON PLANS OR APPROVED BY THE ENGINEER IN WRITING.

12. ALL SHOP AND FIELD WELDS SHALL BE MADE BY WELDERS WHO HAVE BEEN QUALIFIED AND CERTIFIED TO MAKE THE REQUIRED WELDS IN ACCORDANCE WITH THE LATEST AMERICAN WELDING SOCIETY SPECIFICATIONS (A.W.S. D-1.1).

13. WELDS SHALL BE MADE WITH COVERED MILD STEEL ELECTRODES COMPLYING WITH AWS D1-72 CODE AND SERIES E 70XX.

14. ERECTION CONNECTORS SHALL BE PROVIDED IN ORDER TO PROPERLY ALIGN AND BE TRUE AND PLUMB WHEN WELDS ARE MADE.

15. ALL COMPLETE PENETRATION WELDS, BOTH SHOP AND FIELD, SHALL BE TESTED BY A QUALIFIED TESTING LABORATORY UTILIZING ULTRA SONIC TESTING PROCEDURES IN ACCORDANCE WITH A.W.S. D-1.1. ANY WELDS FOUND DEFECTIVE SHALL BE REMOVED AND REPLACED AT NO ADDITIONAL COST TO THE OWNER. ALL X-RAYED WELDS SHALL BE GROUND SMOOTH.

16. THE FABRICATOR SHALL SUPPLY BACK-UP PLATES AND EXTENSION TABS FOR ALL COMPLETE PENETRATION WELDS.

17. ALL STEEL MEMBERS, UNLESS NOTED OTHERWISE, SHALL BE PAINTED W/ ONE COAT OF SHOP PRIMER. DO NOT PRIME ITEMS TO BE EMBEDDED IN CONCRETE OR FIRE PROOFED W/ SPRAY ON MATERIAL WITHOUT COORDINATION W/ THE ARCHITECT. GALVANIZED DECK SHALL BE CONFORM TO ASTM A525, G60 (MINIMUM).

18. REINFORCE STEEL DECK OPENINGS (FLOOR & ROOF) FROM 6" TO 18" WITH 2x2x1/4 STEEL ANGLES. PLACE ANGLES PERPENDICULAR TO FLUTES, EXTEND MINIMUM TWO FLUTES BEYOND EACH SIDE OF OPENING AND WELD DECK AT EACH FLUTE. OPENING LARGER THAN 18" SHALL BE REINFORCED WITH 3x3x1/4 STEEL ANGLES WELDED TO TOP CHORD OF BAR JOISTS UNLESS SHOWN OTHERWISE ON PLANS. WELD DECK TO ANGLE AT 6" o/c AT PERIMETER OF OPENINGS.

19. STEEL LINTELS SUPPORTING BRICK VENEER AT EXTERIOR SHALL BE HOT-DIPPED GALVANIZED UNLESS NOTED OTHERWISE.

20. WELDED HEADED STUDS (WHS) SHALL BE "NELSON ANCHORS", OR EQUAL, Fs = 60 KSI, DIAMETER AND LENGTH AS SHOWN ON PLANS. STUDS TO BE WELDED& SHOP TESTED IN ACCORDANCE W/ THE MANUFACTURER'S RECOMMENDATIONS.

21. AFTER ERECTION, PRIME WELDS, ABRASIONS AND SURFACES NOT PRIMED. USE PRIMER CONSISTENT WITH SHOP COAT. GALVANIZED SURFACES (HOT DIPPED OR COLD) SHALL BE CLEANED AND PAINTED WITH "ZRC".

22. FIELD WELDS AND BOLTED CONNECTIONS SHALL BE VISUALLY INSPECTED BY A QUALIFIED INDEPENDENT INSPECTOR. THE INSPECTOR SHALL PROVIDE A WRITTEN REPORT TO THE STRUCTURAL ENGINEER.

23. A SINGLE ELECTRONIC FILE (PDF FORMAT) SHOP DRAWINGS SHALL BE PREPARED FOR ALL STRUCTURAL STEEL COMPONENTS AND SUBMITTED FOR REVIEW BY ENGINEER. ENGINEERING DRAWINGS SHALL NOT BE REPRODUCED AND USED AS SHOP DRAWINGS.

24. THE CONTRACTOR SHALL REVIEW AND ANNOTATE SHOP DRAWINGS BEFORE SUBMITTING THEM TO THE ARCHITECT/ENGINEER FOR REVIEW. THE CONTRACTOR SHALL ALLOW ARCHITECT/ENGINEER 10 WORKING DAYS FOR REVIEW OF SHOP DRAWINGS.

25. THE STRUCTURAL ENGINEER SHALL BE NOTIFIED FOR A FRAMING OBSERVATION IMMEDIATELY AFTER ROOF PANELS ARE INSTALLED AND BEFORE INSTALLATION OF THE CEILING.

26. INCLUDE IN BID AN ALLOWANCE FOR **1.0 TON** OF FABRICATED AND PRIMED STRUCTURAL STEEL TO BE USED AS DIRECTED IN THE FIELD FOR SPECIAL CONDITIONS AT A COST OF **$4,000.00 PER TON** (LABOR FOR ERECTING SAME TO BE INCLUDED). ANY UNUSED ALLOWANCE WILL BE CREDITED TO THE OWNER AT THE END OF THE PROJECT.

FASTENERS

1. CAST-IN-PLACE AND POST-INSTALLED ANCHORS SHALL BE PER ANCHOR DIAMETER AND EMBEDMENT DEPTH NOTED ON THE DRAWINGS. POST-INSTALLED ANCHORS SHALL BE UTILIZED ONLY WHERE SPECIFIED. ALL ANCHORS SHALL BE HOT-DIPPED GALVANIZED PER ASTM A153.

2. ALL ANCHORS NOTED BELOW SHALL BE INSTALLED IN ACCORDANCE WITH THE MANUFACTURER'S RECOMMENDATIONS. CONTRACTOR SHALL CONTACT MANUFACTURER'S REPRESENTATIVE FOR THE INITIAL TRAINING AND INSTALLATION OF ANCHORS, AND FOR PRODUCT RELATED QUESTIONS AND AVAILABILITY.

3. SPECIAL INSPECTIONS SHALL BE PROVIDED FOR ALL MECHANICAL AND ADHESIVE ANCHORS PER THE APPLICABLE EVALUATION REPORT NOTED BELOW. SPECIAL INSPECTIONS SHALL BE PERFORMED BY INDEPENDENT TESTING LABORATORY PERFORMING QA/QC SERVICES ON PROJECT.

4. EXPANSION BOLTS (EB) IN CONCRETE/CMU SHALL BE TESTED AND QUALIFIED FOR USE IN ACCORDANCE WITH ACI 355.2 AND ICC-ES AC193. ACCEPTABLE PRODUCTS:

   A. KWIK BOLT III (ICC-ES ESR-2302) BY HILTI (CONCRETE)

   B. KWIK BOLT III (ICC-ES-ESR-1385) BY HILTI (MASONRY)

   C. STRONG-BOLT 2 (ICC-ES ESR-3037) BY SIMPSON STRONG-TIE (CONCRETE)

   D. WEDGE-ALL ANCHOR (ICC-ES ESR-1396) BY SIMPSON STRONG-TIE (MASONRY)

5. HEAVY DUTY SLEEVE ANCHORS IN CONCRETE/CMU SHALL BE TESTED AND QUALIFIED OR USE IN ACCORDANCE WITH ACI 355.2 AND ICC-ES AC193. EXPANSION BOLTS (EB) SHALL NOT BE SUBSTITUTED FOR SLEEVE ANCHORS WITHOUT PRIOR WRITTEN APPROVAL BY STRUCTURAL ENGINEER. ACCEPTABLE PRODUCTS:

   A. HSL-3 (ICC-ES ESR-1545) BY HILTI (CONCRETE)

FASTENERS CONTINUED:

6. SCREW ANCHORS IN CONCRETE SHALL BE TESTED AND QUALIFIED FOR USE IN ACCORDANCE WITH ACI 355.2 AND ICC-ES AC193. ACCEPTABLE PRODUCTS:

   A. KWIK HUS-EZ (ICC-ES ESR-3027) BY HILTI (CONCRETE)

   B. KWIK HUS-EZ (ICC-ES ESR-3056) BY HILTI (MASONRY)

   C. TITEN HD (ICC-ES ESR-2713) BY SIMPSON STRONG-TIE (CONCRETE)

   D. TAPCON ANCHORS (ICC-ES ESR-1671) (MASONRY)

   E. POWERS WEDGE BOLT (ICC-ES ESR-1678) (MASONRY)

7. UNDERCUT ANCHORS IN CONCRETE SHALL BE TESTED AND QUALIFIED FOR USE IN ACCORDANCE WITH ACI 355.2 AND ICC-ES AC193. ACCEPTABLE PRODUCTS:

   A. HDA (ICC-ES ESR-1546) BY HILTI (CONCRETE)

   B. TORQ-CUT (ICC-ES ESR-2705) BY SIMPSON STRONG-TIE (CONCRETE)

8. POWDER ACTUATED FASTENERS IN CONCRETE/CMU SHALL BE TESTED AND QUALIFIED FOR USE IN ACCORDANCE WITH ACI 355.2 AND ICC-ES AC193. ACCEPTABLE PRODUCTS:

   A. X-U (ICC-ES ESR-2269) BY HILTI (CONCRETE/MASONRY/STEEL)

   B. POWDER ACTUATED FASTENERS (ICC-ES ESR-2138) BY SIMPSON STRONG TIE (CONCRETE/MASONRY)

9. ADHESIVE ANCHORS IN CONCRETE/CMU SHALL BE TESTED AND QUALIFIED FOR USE IN ACCORDANCE WITH ACI 355.4 AND ICC-ES AC308. ACCEPTABLE PRODUCTS:

   A. HIT-RE 500-V3 (ICC-ES ESR-3814) BY HILTI (CONCRETE)

   B. HIT-HY 270 (ICC-ES ESR-4143) BY HILTI (MASONRY)

   C. SET-XP (ICC-ES ESR-2508) BY SIMPSON STRONG-TIE (CONCRETE)

   D. SET (ICC-ES ESR-1772) BY SIMPSON STRONG-TIE (MASONRY)

10. J-BOLTS SHALL BE FABRICATED FROM ASTM A36/A307 ROD. BOLTS, NUTS AND WASHERS SHALL BE GALVANIZED. EXPANSION BOLTS/SLEEVE ANCHORS SHALL NOT BE SUBSTITUTED FOR J-BOLTS WITHOUT PRIOR WRITTEN APPROVAL BY STRUCTURAL ENGINEER.

11. HEADED ANCHOR RODS SHALL BE FABRICATED FROM ASTM F1554 MATERIAL, FY=36 KSI.

12. SUBSTITUTION REQUESTS FOR PRODUCTS LISTED ABOVE SHALL BE SUBMITTED BY THE CONTRACTOR TO THE STRUCTURAL ENGINEER ALONG WITH CALCULATIONS THAT ARE PREPARED & SEALED BY A REGISTERED PROFESSIONAL ENGINEER. THE CALCULATIONS SHALL DEMONSTRATE THAT THE SUBSTITUTED PRODUCT IS CAPABLE OF ACHIEVING THE PERTINENT EQUIVALENT PERFORMANCE VALUES OF THE SPECIFIED PRODUCT USING THE APPROPRIATE DESIGN PROCEDURE AND/OR STANDARDS. SUBSTITUTED ANCHORS SHALL HAVE A VALID CURRENT EVALUATION (ICC-ES OR IAPMO-ES) REPORT.

13. REFERENCE STRUCTURAL STEEL NOTES FOR BOLTS CONNECTING STRUCTURAL STEEL COMPONENTS.

LIGHTWEIGHT STEEL FRAMING (STEEL STUDS)

1. THE **GENERAL CONTRACTOR, PROJECT SUPERINTENDENT AND THE LIGHTWEIGHT STEEL FRAMING FOREMAN** SHALL MEET WITH THE STRUCTURAL ENGINEER PRIOR TO THE START OF LIGHTWEIGHT STEEL FRAMING WORK TO REVIEW PROJECT REQUIREMENTS AND PROCEDURES.

2. ALL STUDS AND ACCESSORIES SHALL BE OF THE TYPE, SIZE, GAUGE AND SPACING SHOWN ON THE DRAWINGS.

3. ALL STUDS AND JOIST MEMBERS 16 GAUGE AND HEAVIER SHALL BE FORMED FROM STEEL CORRESPONDING TO A TYPE LISTED IN THE A.I.S.I. "SPECIFICATION FOR THE DESIGN OF COLD-FORMED STEEL STRUCTURAL MEMBERS", WITH A MINIMUM YIELD STRENGTH OF 33 KSI UNLESS SPECIFICALLY NOTED OTHERWISE.

4. ALL 18 GAUGE AND LIGHTER MEMBERS, TRACK, BRIDGING, AND ACCESSORY ITEMS SHALL BE FORMED FROM STEEL "SPECIFICATION FOR THE DESIGN OF COLD-FORMED STEEL STRUCTURAL MEMBERS", WITH A MINIMUM YIELD STRENGTH OF 33 KSI UNLESS SPECIFICALLY NOTED OTHERWISE.

5. ALL FRAMING PRODUCTS SHALL BE FORMED FROM STEEL POSSESSING A COATING CORRESPONDING TO THE MINIMUM REQUIREMENTS OF ASTM C955.

6. ALL FRAMING COMPONENTS SHALL BE CUT SQUARELY FOR ATTACHMENT TO PERPENDICULAR EMBERS, OR, AS REQUIRED, FOR AN ANGULAR FIT AGAINST ABUTTING MEMBERS.

7. ALL FIELD CUTTING OF STUDS MUST BE DONE BY SAWING OR SHEARING. TORCH CUTTING OF COLD FORMED MEMBERS IS UNACCEPTABLE.

8. WHEN REQUIRED FOR BRIDGING PURPOSES, THE FRAMING FABRICATOR IS TO ENSURE PUNCH OUT ALIGNMENT WHEN ASSEMBLING FRAMING AND FIELD CUTTING STUDS TO LENGTH. REFER TO TYPICAL STUD/TRACK CONNECTION AND INDEXING DETAILS.

9. NO SPLICES IN STUDS, JOISTS, OR OTHER LOAD CARRYING MEMBERS MAY BE MADE WITHOUT PRIOR ENGINEERING REVIEW AND SPECIFIC DETAILS FOR ANY SUCH SPLICE(S).

10. NO NOTCHING OR COPING OF STUDS, JOISTS OR RAFTERS IS ALLOWED, UNLESS STATED WITHIN THIS DRAWING PACKAGE.

11. WHERE SPLICING OF WALL TRACK IS NECESSARY BETWEEN STUDS, A PIECE OF STUD SHALL BE PLACED IN THE ADJOINING TRACK SECTIONS AND FASTENED TO THE TRACK FLANGES AT BOTH SIDES OF THE WALL OR THE TRACKS SHALL BE BUTTED TIGHT TOGETHER AND FASTENED TO STRUCTURE EITHER SIDE OF THE JOINT.

12. FOR ALL TRACKS USED IN COMPOSITE MEMBERS SUCH AS TRUSSES, POSTS, HEADERS AND JAMBS, THE TRACK MUST BE INSTALLED AS A SINGLE PIECE; NO SPLICING IS PERMITTED.

13. ALL SCREWS SHALL BE OF THE DIAMETER AND SIZE INDICATED ON THE DRAWINGS, AND SHALL BE THOSE MANUFACTURED AND TESTED BY ITW BUILDEX OR EQUIVALENT. A MINIMUM ½ INCH EDGE DISTANCE AND 1/2 INCH SCREW SPACING IS REQUIRED, UNLESS NOTED OTHERWISE ON THE DRAWINGS. SCREW PENETRATION THROUGH JOINED MATERIALS SHALL NOT BE LESS THAN THREE EXPOSED THREADS. SCREW DESIGN IS BASED ON A TYPE 'T3' SCREW. (UNLESS NOTED OTHERWISE)

14. ALL POWDER ACTUATED FASTENERS (P.A.F.) SUBJECTED TO TENSION SHALL HAVE A 15MM (MINIMUM) DIAMETER STEEL WASHERS. THE FOLLOWING MINIMUM EDGE DISTANCES AND FASTENER SPACING APPLY:

	EDGE DISTANCE		MINIMUM SPACING		PENETRATION	
PIN DIAMETER	STEEL	CONCRETE	STEEL	CONCRETE	STEEL	CONCRETE
0.157"ø	1/2"	3"	1"	4"	FULL	1.1/4"

GREEN, RUBIANO & ASSOCIATES
CONSULTING STRUCTURAL ENGINEERS
1220 WEST HARRISON
HARLINGEN, TEXAS 78551
(956)428-4461 (956)428-0287 FAX
FIRM REGISTRATION # F-4146

COPYRIGHT 2019 BY GREEN, RUBIANO & ASSOCIATES

No.	REVISIONS	BY

GMS ARCHITECTS
1150 paredes line rd.
brownsville
texas 78526
(956) 546-0110
fax (956) 546-0196

SAN BENITO CISD
ADDITIONS AND RENOVATIONS AT SAN BENITO HS AND SULLIVAN ELEMENTARY
SAN BENITO TEXAS

BID PACKAGE "A"
SAN BENITO
HIGH SCHOOL

STATE OF TEXAS
HERIBERTO CAVAZOS
103450
LICENSED PROFESSIONAL ENGINEER
8/5/19

COPYRIGHT 2019
GOMEZ MENDEZ SAENZ INC.
ARCHITECTS-PLANNERS

DATE	AUGUST 5, 2019
SCALE	As Shown
DRAWN	IG, JA, CW
JOB	192-539
SHEET	AS1.1

GENERAL STRUCTURAL NOTES

ROUGH CARPENTRY NOTES

1. ROUGH CARPENTRY SHALL COMPLY WITH THE PROVISIONS OF THE 2012 EDITION OF THE INTERNATIONAL BUILDING CODE AND THE NATIONAL DESIGN STANDARD, SPECIAL DESIGN PROVISIONS FOR WIND AND SEISMIC (SDPWS).
2. ALL LUMBER USED FOR LOAD SUPPORTING PURPOSES SHALL BE IDENTIFIED BY THE GRADE MARK OF AN APPROVED LUMBER GRADING OR INSPECTION BUREAU OR AGENCY.
3. ALL LUMBER AND PLYWOOD REQUIRED TO BE PRESERVATIVELY TREATED SHALL BEAR AN APPROVED AWPB QUALITY MARK.
4. FRAMING LUMBER MOISTURE CONTENT SHALL NOT EXCEED 19 PERCENT AT TIME OF INSTALLATION.
5. MATERIALS

   A. FRAMING LUMBER

USE-ITEM	LUMBER SPECIES	MINIMUM GRADE	GRADING AGENCY
BOTTOM PLATE	SOUTHERN YELLOW PINE	#2	SPIB
STUDS	SPRUCE PINE FIR	#2	SPIB
TOP PLATES	SOUTHERN YELLOW PINE	#2	SPIB
HEADERS	SOUTHERN YELLOW PINE	#2	SPIB
RAFTERS, JOISTS	SOUTHERN YELLOW PINE	#2	SPIB

   * ALL MEMBERS IN CONTACT WITH MASONRY OR CONCRETE SHALL BE PRESSURE TREATED.

   B. PLYWOOD

USE-ITEM	THICKNESS	EXPOSURE	APA SPAN RATING
ROOF SHEATHING	5/8"	1	32/16

   C. FASTENERS

COMMON NAIL	SHANK DIAMETER	HEAD DIAMETER	LENGTH
20d	0.192"	0.406"	4"
16d	0.162"	0.344"	3.1/2"
10d	0.148"	0.312"	3"
8d	0.131"	0.281"	2.1/2"

   1. THE NUMBER AND SIZE OF NAILS CONNECTING WOOD MEMBERS SHALL BE AS SHOWN ON PLAN BUT NOT LESS THAN SPECIFIED IN THE IBC 2012 TABLE 2304.9.1.
   2. ALL NAILS EXPOSED TO MOISTURE SHALL BE HOT-DIPPED GALVANIZED.

6. VERTICAL FRAMING MEMBERS SHALL BE CONTINUOUS LENGTH WITHOUT SPLICING. SPLICES IN HORIZONTAL MEMBERS SHALL OCCUR ONLY OVER BEARING POINTS. LAP MEMBERS WHICH BEAR ON PLATES TO PROVIDE FULL BEARING FOR EACH MEMBER.
7. STRUCTURAL MEMBERS WHOSE STRENGTH IS IMPAIRED BY IMPROPER CUTTING, DRILLING, OR EXCESSIVE DEFECTS SHALL BE REPLACED OR REINFORCED IN A MANNER ACCEPTABLE TO THE ENGINEER.
8. RAFTERS SHALL NOT BE NOTCH AT THE END SUPPORTS OR THE MIDDLE 1/3 OF THE RAFTER SPAN.
9. RAFTERS ARE PERMITTED TO BE NOTCHED IN THE TOP OR BOTTOM OF THE RAFTERS AT THE OUTER 1/3 OF THE SPAN. NOTCHES SHALL NOT EXCEED IN DEPTH 1/6 THE ACTUAL RAFTER DEPTH AND SHALL NOT EXCEED IN LENGTH 1/3 THE ACTUAL FASTER DEPTH.
10. RAFTERS ARE PERMITTED TO BE BORED TO A DIAMETER NOT GREATER THAN 1/3 THE ACTUAL RAFTER DEPTH AND NOT BE CLOSER THAN 2 INCHES FROM THE TOP OR BOTTOM EDGE OF THE RAFTER.
11. SHEATHING SHALL BE INSTALLED CONTINUOUS OVER TWO OR MORE SPANS WITH FACE GRAIN PERPENDICULAR TO SUPPORTS AND JOINTS STAGGERED. A 1/8" SPACE SHALL BE PROVIDED AT PANEL EDGES AND END JOINTS UNLESS RECOMMENDED OTHERWISE BY THE MANUFACTURER.
12. SHEATHING SHALL BE ATTACHED TO STRUCTURE AS SPECIFIED ON SHEATHING NAILING SCHEDULES.
13. ALL METAL CONNECTORS, ANCHORS, HOLD DOWNS AND ETC., SHALL BE MANUFACTURED BY "SIMPSON STRONG TIE" OR APPROVED EQUIVALENT. ALL METAL CONNECTORS SHALL BE HOT-DIPPED GALVANIZED, U.N.O.
14. ENGINEER SHALL BE CONTACTED FOR FRAMING INSPECTIONS PRIOR TO INSTALLING OF CEILINGS, WALL SHEATHING, WALL FINISHES, AND/OR ROOF COVERINGS (INCLUDING BUILDING PAPER).

EXTERIOR COMPONENTS & CLADDINGS

ALL EXTERIOR COMPONENT AND CLADDING SYSTEMS (E.G. WINDOWS, CURTAIN WALLS, STOREFRONTS, DOORS, ARCHITECTURAL SIDINGS, METAL WALL AND ROOF PANELS, ROOFING SYSTEMS, SKYLIGHTS) MUST MEET MINIMUM WIND CODE REQUIREMENTS. CONTRACTOR MUST SUBMIT COMPONENT AND CLADDING ASSEMBLY WIND PRESSURE AND IMPACT RESISTANCE TESTING RATINGS AND REQUIRED ATTACHMENT PROCEDURES TO STRUCTURAL ENGINEER FOR REVIEW. ROOF TOP MECHANICAL EQUIPMENT AND THEIR SUPPORT COMPONENTS, AND ANCHORING OF THESE ITEMS TO THE STRUCTURE, SHALL BE DELEGATED DESIGN TO BE PERFORMED BY THE EQUIPMENT'S MANUFACTURER, TO MEET THE WIND PRESSURES CALCULATED PER ASCE 7-10 SECTION 29.5.1 AND ASCE 7-05 SECTION 6.5.15.1, WHICHEVER PRODUCES GREATER WIND LOADS BY USING THE WIND DESIGN PARAMETERS LISTED ON THE GENERAL STRUCTURAL NOTES DESIGN CRITERIA.

1. TESTED ASSEMBLIES

   A. THE CONTRACTOR SHALL INSTALL PROJECT SPECIFIC ASSEMBLIES THAT HAVE BEEN TESTED AND MEET THE APPLICABLE PERFORMANCE REQUIREMENTS LISTED BELOW. PROJECT ASSEMBLIES SHALL BE INSTALLED IN SAME MANNER AS TESTED ASSEMBLIES INCLUDING SYSTEM COMPONENTS, REINFORCEMENT, GLAZING, HARDWARE, ANCHORS AND FASTENING LOCATIONS, SEALANTS & ALL ACCESSORIES, AS APPLICABLE.

2. ASSEMBLY PERFORMANCE REQUIREMENTS

   A. STRUCTURAL PERFORMANCE: TESTED ASSEMBLY THAT PASSES STRUCTURAL PERFORMANCE REQUIREMENTS WHEN TESTED IN ACCORDANCE WITH THE APPLICABLE PERFORMANCE STANDARD(S) LISTED BELOW, AT A MINIMUM OF THE POSITIVE AND NEGATIVE DESIGN WIND-LOAD PRESSURES INDICATED ON THE STRUCTURAL DRAWINGS. TESTED ASSEMBLY SHALL BE NO SMALLER IN WIDTH AND LENGTH THAN ASSEMBLY INDICATED FOR USE ON THE PROJECT AND SHALL MATCH PROJECT ASSEMBLY INCLUDING ALL COMPONENTS AND SUBSTRATE(S).

   B. WINDBORNE-DEBRIS-IMPACT RESISTANCE: TESTED ASSEMBLY THAT PASSES LARGE-MISSILE IMPACT PROTECTION TESTING REQUIREMENTS ACCORDING TO ASTM E 1996 WHEN TESTED ACCORDING TO ASTM E 1886. TESTED ASSEMBLY SHALL BE NO SMALLER IN WIDTH AND LENGTH THAN ASSEMBLY INDICATED FOR USE ON THE PROJECT AND SHALL MATCH PROJECT ASSEMBLY INCLUDING ALL COMPONENTS AND SUBSTRATE(S).

3. ASSEMBLY PERFORMANCE STANDARDS

   A. ASTM E 330 – STANDARD TEST METHOD FOR STRUCTURAL PERFORMANCE OF EXTERIOR WINDOWS, DOORS, SKYLIGHTS AND CURTAIN WALLS BY UNIFORM STATIC AIR PRESSURE DIFFERENCE

   B. ASTM E 1592 – STANDARD TEST METHOD FOR STRUCTURAL PERFORMANCE OF SHEET METAL ROOF AND SIDING SYSTEMS BY UNIFORM STATIC AIR PRESSURE DIFFERENCE

   C. ASTM E 1886 – STANDARD TEST METHOD FOR PERFORMANCE OF EXTERIOR WINDOWS, CURTAIN WALLS, DOORS, AND STORM SHUTTERS IMPACTED BY MISSILE(S) AND EXPOSED TO CYCLIC PRESSURE DIFFERENTIALS

   D. ASTM E 1996 – STANDARD SPECIFICATION FOR PERFORMANCE OF EXTERIOR WINDOWS, CURTAIN WALLS, DOORS AND IMPACT PROTECTIVE SYSTEMS IMPACTED BY WINDBORNE DEBRIS IN HURRICANES

   E. FM 4450 – APPROVAL STANDARD FOR CLASS 1 INSULATED STEEL DECK ROOFS

   F. FM 4470 – APPROVAL STANDARD FOR SINGLE-PLY, POLYMER-MODIFIED BITUMEN SHEET, BUILT-UP ROOF (BUR) AND LIQUID APPLIED ROOF ASSEMBLIES FOR USE IN CLASS 1 AND NONCOMBUSTIBLE ROOF DECK CONSTRUCTION

   G. FM 4474 – AMERICAN NATIONAL STANDARD FOR EVALUATING THE SIMULATED WIND UPLIFT RESISTANCE OF ROOF ASSEMBLIES USING STATIC POSITIVE AND/OR NEGATIVE DIFFERENTIAL PRESSURES

   H. UL 580 – STANDARD FOR TESTS FOR UPLIFT RESISTANCE OF ROOF ASSEMBLIES

   I. UL 1897 – STANDARD FOR UPLIFT TESTS FOR ROOF COVERING SYSTEMS

EXTERIOR COMPONENTS & CLADDINGS CONTINUED:

4. ASSEMBLY SUBMITTALS

   A. SUBMITTALS SHALL CONSIST OF PROJECT SPECIFIC SHOP DRAWINGS AND ASSEMBLY TEST REPORTS, AS DESCRIBED BELOW. SUBMITTALS SHALL BE COMPLETE, CLEAR AND LEGIBLE; INCOMPLETE SUBMITTALS WILL BE REJECTED.

   B. SHOP DRAWINGS SHALL INCLUDE THE FOLLOWING ITEMS:

      1) SYSTEM DESCRIPTION INCLUDING MANUFACTURER'S NAME AND SPECIFIC PRODUCT MODEL NUMBER, NAME OR DESIGNATION.
      2) MANUFACTURER'S PRODUCT DATA/TECHNICAL INFORMATION AND DETAILS.
      3) SYSTEM LAYOUT PLANS, ELEVATIONS, CROSS-SECTIONS AND DETAILS AS APPLICABLE TO THE PROJECT.
      4) DESCRIPTION OF SYSTEM'S ASSEMBLY COMPONENTS (E.G. ROOF LAYERS, FRAME MEMBERS, REINFORCEMENT, DOOR TYPE, GLAZING, HARDWARE, ANCHORS AND FASTENING LOCATIONS, SEALANTS, ACCESSORIES). ALL COMPONENTS SHALL MATCH THOSE SPECIFIED ON ASSEMBLY TEST REPORTS.
      5) SHOP DRAWINGS SHALL INDICATE THE SYSTEM ATTACHMENT METHOD INCLUDING ANCHOR TYPE AND FASTENER LOCATIONS FOR EACH DIFFERENT TYPE OF SUBSTRATE. SYSTEM ATTACHMENT SHALL BE PER ASSEMBLY TEST REPORTS.
      6) ASSEMBLY TEST REPORTS OFTEN PROVIDE OPTIONS FOR MATERIALS AND FASTENING METHODS. SHOP DRAWINGS SHALL BE SPECIFIC TO THE MATERIAL OR METHOD THAT THE CONTRACTOR IS PROPOSING TO INSTALL ON THE PROJECT.
      7) CROSS-REFERENCING BETWEEN THE SHOP DRAWINGS AND THE ASSEMBLY TEST REPORTS IS ENCOURAGED, BUT THE SHOP DRAWINGS SHALL BE DETAILED ENOUGH TO STAND INDEPENDENT OF THE TEST REPORTS.

   C. ASSEMBLY TEST REPORTS SHALL INCLUDE THE FOLLOWING ITEMS:

      1) PERFORMANCE RATINGS BASED ON EVALUATION OF COMPREHENSIVE TESTING IN ACCORDANCE WITH THE APPLICABLE PERFORMANCE STANDARD(S) LISTED ABOVE.
      2) TESTING AND DEVELOPMENT OF REPORTS SHALL BE PERFORMED BY A QUALIFIED THIRD-PARTY TESTING AGENCY.
      3) TEST REPORTS SHALL BE SEALED BY THE QUALIFIED PROFESSIONAL ENGINEER RESPONSIBLE FOR THEIR PREPARATION.
      4) TEST REPORTS SHALL BE RECENT TO INCLUDE THE MOST CURRENT SYSTEM MANUFACTURER'S COMPONENTS AND AVAILABLE FASTENERS AND ACCESSORIES. EXPIRED TEST REPORTS SHALL BE REJECTED.
      5) TEST REPORTS SHALL BE SUBMITTED FOR EACH DIFFERENT TYPE OF ASSEMBLY ON THE PROJECT INCLUDING VARIATIONS OF SYSTEM COMPONENTS AND SUBSTRATES.

SPECIAL INSPECTIONS

SPECIAL INSPECTIONS INDEPENDENT OF THE CONTRACTOR, THE ARCHITECT, OR THE ENGINEER, SHALL BE PROVIDED BY A SPECIAL INSPECTOR EMPLOYED BY THE OWNER ACCORDING TO CHAPTER 17 OF THE IBC 2012. THE SPECIAL INSPECTOR SHALL OBSERVE THE WORK FOR CONFORMANCE WITH THE CONTRACT DOCUMENTS. THE SPECIAL INSPECTOR SHALL SEND WRITTEN REPORTS TO THE OWNER, THE ARCHITECT, THE ENGINEER AND THE CONTRACTOR. THE REPORTS SHALL INDICATE IF WORK INSPECTED WAS DONE IN CONFORMANCE WITH THE CONTRACT DOCUMENTS. ALL DISCREPANCIES SHALL BE BROUGHT TO THE IMMEDIATE ATTENTION OF THE CONTRACTOR FOR CORRECTION. IF THE DISCREPANCIES ARE NOT CORRECTED, THE SPECIAL INSPECTOR SHALL BRING THE DISCREPANCIES TO THE ATTENTION OF THE REGISTERED DESIGN PROFESSIONAL IN RESPONSIBLE CHARGE PRIOR TO THE COMPLETION OF THAT PHASE OF THE WORK. THE SPECIAL INSPECTOR SHALL SUBMIT A FINAL SIGNED REPORT STATING THAT THE SPECIAL INSPECTION WORK WAS, TO THE BEST OF THEIR KNOWLEDGE, IN OR NOT IN CONFORMANCE WITH THE DRAWINGS, SPECIFICATIONS AND APPLICABLE WORKMANSHIP PROVISIONS OF THE IBC 2012.

CONTINUOUS OR PERIODIC SPECIAL INSPECTION IS REQUIRED FOR THE FOLLOWING WORK:

REQUIRED VERIFICATION AND INSPECTION OF SOILS

VERIFICATION AND INSPECTION TASK	CONTINUOUS DURING TASK LISTED	PERIODICALLY DURING TASK LISTED
VERIFY SOILS BELOW SHALLOW FOUNDATIONS ARE SUITABLE TO ACHEIVE THE BEARING CAPACITY FOR WHICH THEY WERE DESIGNED		X
VERIFY EXCAVATIONS ARE EXTENDED TO PROPER DEPTH AND HAVE REACHED PROPER MATERIAL		X
PERFORM CLASSIFICATION AND TESTING OF COMPACTED SELECT FILL MATERIALS		X
VERIFY USE OF PROPER MATERIALS, DENSITIES AND LIFT THICKNESSES DURING PLACEMENT AND COMPACTION OF SELECT FILL	X	
PRIOR TO PLACEMENT OF COMPACTED SELECT FILL, OBSERVE SUBGRADE AND VERIFY THAT SITE HAS BEEN PREPARED PROPERLY		X

REQUIRED VERIFICATION AND INSPECTION OF CONCRETE CONSTRUCTION

VERIFICATION AND INSPECTION	CONTINUOUS	PERIODIC
INSPECTION OF REINFORCING STEEL, INCLUDING PRESTRESSING TENDONS, AND PLACEMENT		X
INSPECT BOLTS TO BE INSTALLED IN CONCRETE PRIOR TO AND DURING PLACEMENT OF CONCRETE	X	
VERIFY USE OF REQUIRED DESIGN MIX		X
PERFORM SLUMP AND AIR CONTENT TEST, AND DETERMINE THE TEMPERATURE OF THE CONCRETE AT THE TIME OF SAMPLING FRESH CONCRETE FOR MAKING SPECIMENS FOR STRENGTH TESTS PER ACI 318	X	
INSPECTION OF CONCRETE AND SHOTCRETE PLACEMENT FOR PROPER APPLICATION TECHNIQUES	X	
INSPECTION FOR MAINTENANCE OF SPECIFIED CURING TEMPERATURE AND TECHNIQUES		X
INSPECTION OF PRESTRESSED CONCRETE APPLICATION OF PRESTRESSING FORCES	X	
VERIFICATION OF IN-SITU CONCRETE STRENGTH, PRIOR TO STRESSING OF TENDONS IN POST-TENSIONED CONCRETE AND PRIOR TO REMOVAL OF SHORES AND FORMS FROM BEAMS AND STRUCTURAL SLABS		X
ERECTION OF PRECAST CONCRETE MEMBERS		X
INSPECT FORMWORK FOR SHAPE, LOCATION AND DIMENSIONS OF THE CONCRETE MEMBER BEING FORMED		X

REQUIRED VERIFICATION AND INSPECTION OF ANCHORS

VERIFICATION AND INSPECTION	CONTINUOUS	PERIODIC
CAST-IN-PLACE, POST-INSTALLED, MECHANICAL AND EPOXY SET ANCHORS: AS APPLICABLE, THE INSPECTION PROGRAM SHALL VERIFY THE ANCHOR TYPE, EMBEDMENT, TIGHTENING TORQUE, DIMENSIONS, HOLE DEPTH & DIAMETER AND CLEANOUT, EPOXY MIXING AND PLACEMENT PROCEDURES IN ACCORDANCE WITH THE CONTRACT DOCUMENTS AND THE CURRENT ICC-ES EVALUATION REPORT	FREQUENCY OF INSPECTION SHALL BE IN ACCORDANCE WITH THE CURRENT ICC-ES EVALUATION REPORT, OR PER THE SPECIAL INSPECTION REQUIREMENTS OF THE ANCHOR SUBSTRATE, WHICHEVER IS MORE STRINGENT	

REQUIRED VERIFICATION AND INSPECTIONS OF OPEN-WEB STEEL JOISTS AND JOIST GIRDERS

VERIFICATION AND INSPECTION TASK	CONTINUOUS DURING TASK LISTED	PERIODICALLY DURING TASK LISTED
INSPECT THE INSTALLATION OF OPEN-WEB STEEL JOISTS AND JOIST GIRDERS		X
INSPECT WELDED OR BOLTED END CONNECTIONS		X
INSPECT HORIZONTAL OR DIAGONAL STANDARD BRIDGING AND BRIDGING THAT DIFFERS FROM SJI SPECIFICATIONS		X

REQUIRED VERIFICATION AND INSPECTION OF STEEL CONSTRUCTION

VERIFICATION AND INSPECTION	CONTINUOUS	PERIODIC
MATERIAL VERIFICATION OF HIGH-STRENGTH BOLTS, NUTS AND WASHERS		X
INSPECTION OF HIGH STRENGTH BOLTING		X
INSPECTION OF WELDING:		
COMPLETE AND PARTIAL PENETRATION GROOVE WELDS	X	
MULTIPASS FILLET WELDS	X	
SINGLE-PASS FILLET WELDS		X
FLOOR AND ROOF DECK WELDS		X
INSPECTION OF STEEL FRAME JOINT DETAILS FOR COMPLIANCE WITH APPROVED CONSTRUCTION DOCUMENTS		X

REQUIRED VERIFICATION AND INSPECTION OF COLD-FORMED LIGHTWEIGHT STEEL FRAME CONSTRUCTION (EXTERIOR METAL STUDS)

VERIFICATION AND INSPECTION TASK	CONTINUOUS DURING TASK LISTED	PERIODICALLY DURING TASK LISTED
MATERIAL VERIFICATION OF COLD-FORMED LIGHTWEIGHT FRAMING MEMBERS AND ACCESSORIES		X
TYPE, SIZE AND GAGE OF FRAMING MEMBERS AND ACCESSORIES (AS PER SHOP DRAWINGS)		X
SPACING OF FRAMING MEMBERS, BRACING, BLOCKING, AND BRIDGING (AS PER SHOP DRAWINGS)		X
INSPECTION OF WELDING; TYPE, LENGTH, SPACING (AS PER SHOP DRAWINGS)		X
INSPECTION OF FASTENER ATTACHMENT: BOLTING, ANCHORING, AND OTHER FASTENING OF COMPONENTS.		X

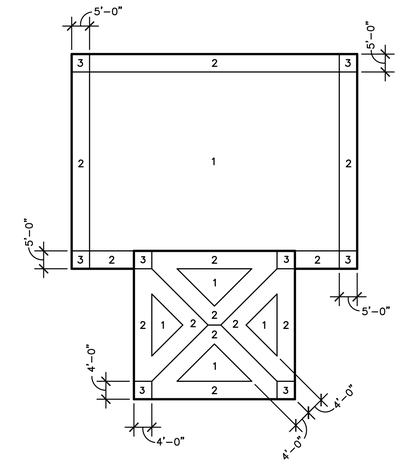

SAN BENITO CISD
SAN BENITO HIGH SCHOOL NEW ENTRY ADDITION
ROOF DESIGN WIND PRESSURE DIAGRAM (SERVICE)

DESIGN WIND PRESSURE FOR ROOF COMPONENTS & CLADDING	
ZONE	P- (UPLIFT)
1	-25 PSF
2	-42 PSF
3	-63 PSF

EXTERIOR FINISHES, DOORS & WINDOWS MAXIMUM DESIGN WIND PRESSURES
P+ = +26 PSF TOWARDS THE SURFACE
P- = -35 PSF AWAY FROM THE SURFACE

GREEN, RUBIANO & ASSOCIATES
CONSULTING STRUCTURAL ENGINEERS
1220 WEST HARRISON
HARLINGEN, TEXAS 78551
(956)428-4461 (956)428-0287 FAX
FIRM REGISTRATION # F-4145

COPYRIGHT 2019 BY GREEN, RUBIANO & ASSOCIATES

No.	REVISIONS	BY

GMS ARCHITECTS
1150 paredes line rd.
brownsville
texas 78526
(956) 546-0110
fax (956) 546-0196

SAN BENITO CISD
ADDITIONS AND RENOVATIONS AT SAN BENITO HS AND SULLIVAN ELEMENTARY
SAN BENITO TEXAS

BID PACKAGE "A"
SAN BENITO
HIGH SCHOOL

STATE OF TEXAS
HERIBERTO CANAZOS
103450
LICENSED
PROFESSIONAL ENGINEER
8/5/19

COPYRIGHT 2019
GOMEZ MENDEZ SAENZ INC.
ARCHITECTS-PLANNERS

DATE	AUGUST 5, 2019
SCALE	As Shown
DRAWN	IG, JA, CW
JOB	192-539
SHEET	AS1.2

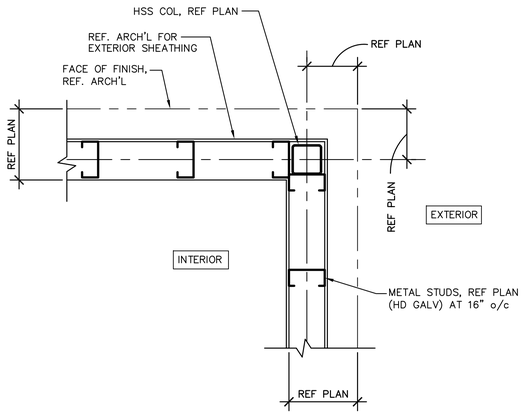

1 TYPICAL STUD FRAMING AT EXTERIOR BUILDING OUTSIDE CORNER

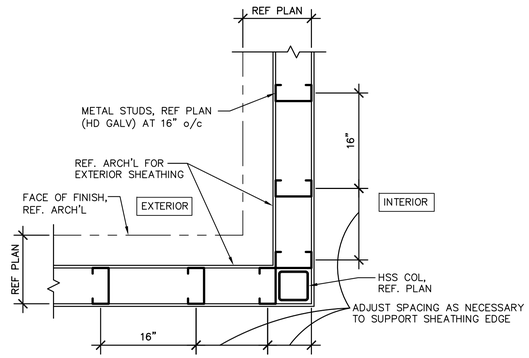

2 TYPICAL STUD FRAMING AT EXTERIOR BUILDING INSIDE CORNER

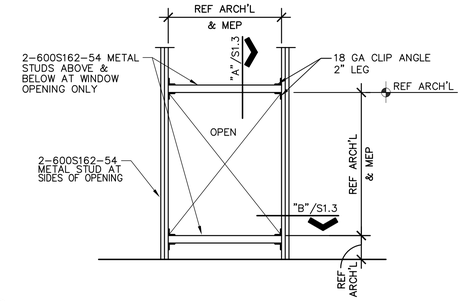

3 TYPICAL WINDOW/DOOR/LOUVER OPENING

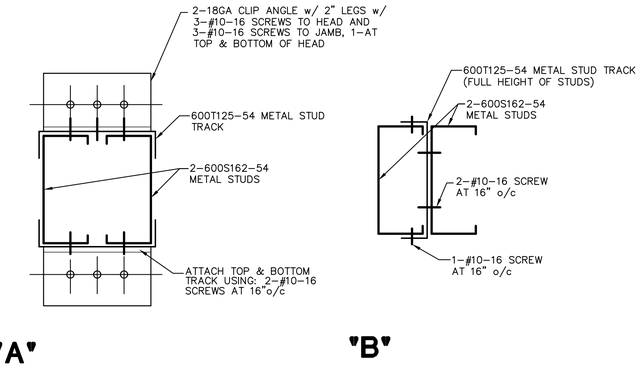

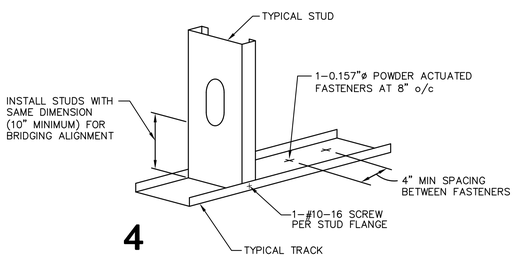

4

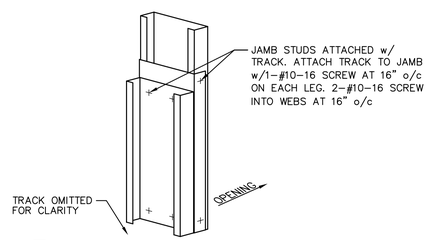

5

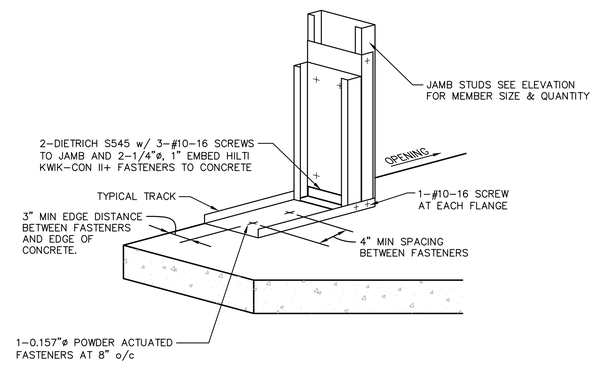

6

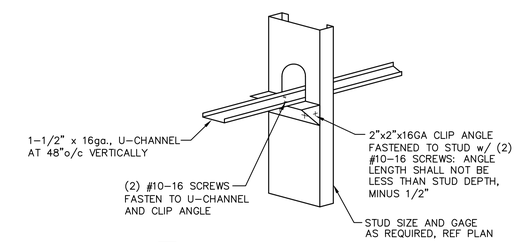

7 METAL STUD BRIDGING

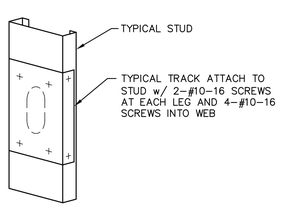

8 TYPICAL PUNCH-OUT REINFORCMENT DETAIL

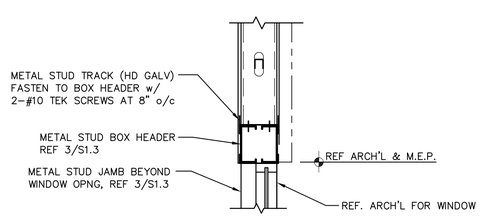

9 TYPICAL WINDOW/DOOR/LOUVER OPENING HEADER DETAIL

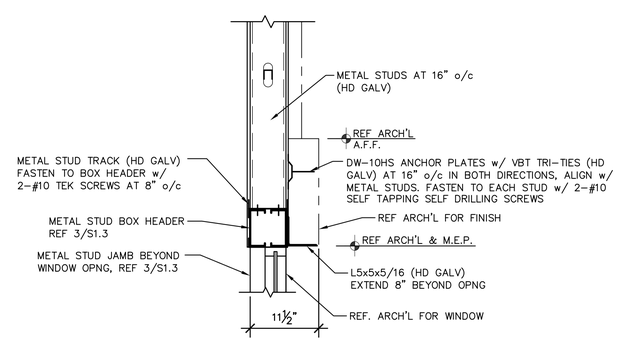

10 TYPICAL WINDOW/DOOR/LOUVER OPENING HEADER DETAIL WITH BRICK VENEER

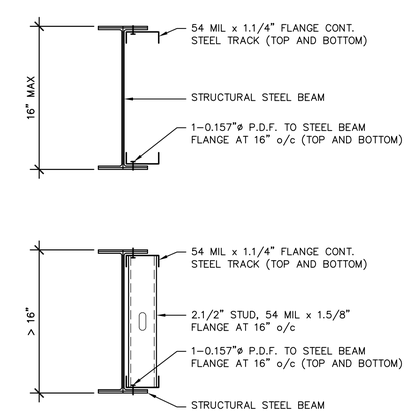

11 TYPICAL STEEL BEAM INFILL STUD DETAIL

No.	REVISIONS	BY

GMS ARCHITECTS
1150 paredes line rd.
brownsville
texas 78526
(956) 546-0110
fax (956) 546-0196

SAN BENITO CISD
ADDITIONS AND RENOVATIONS AT SAN BENITO HS AND SULLIVAN ELEMENTARY
SAN BENITO TEXAS

BID PACKAGE "A"
SAN BENITO HIGH SCHOOL

STATE OF TEXAS
HERMBERTO CAVAZOS
103450
LICENSED
PROFESSIONAL ENGINEER
8/5/19

COPYRIGHT 2019
GOMEZ MENDEZ SAENZ INC.
ARCHITECTS-PLANNERS

DATE	AUGUST 5, 2019
SCALE	As Shown
DRAWN	IG, JA, CW
JOB	192-539
SHEET	AS1.3

GREEN, RUBIANO & ASSOCIATES
CONSULTING STRUCTURAL ENGINEERS
1320 WEST HARRISON
HARLINGEN, TEXAS 78551
(956)428-4461 (956)428-0287 FAX
FIRM REGISTRATION # F-4145

COPYRIGHT 2019 BY GREEN, RUBIANO & ASSOCIATES

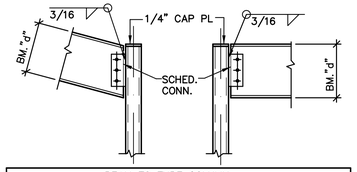

BEAM TO TUBE COLUMN CONNECTION SCHEDULE		
BEAM SIZE	PL SIZE	BOLTS
W8 & W10	PL 3/8x3.1/2x0'-6"	2-3/4"DIA.
W12 & W14	PL 3/8x3.1/2x0'-9"	3-3/4"DIA.
W16	PL 3/8x3.1/2x1'-0"	4-3/4"DIA.
W18	PL 3/8x3.1/2x1'-3"	5-3/4"DIA.
W21	PL 3/8x3.1/2x1'-6"	6-3/4"DIA.
W24	PL 3/8x3.1/2x1'-9"	7-3/4"DIA.

1 TYPICAL BEAM TO COLUMN CONNECTION

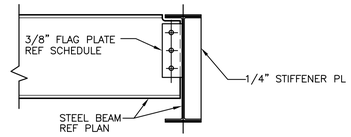

BEAM TO BEAM CONNECTION SCHEDULE		
BEAM SIZE	PL SIZE	BOLTS
W8 & W10	PL 3/8x3.1/2x0'-6"	2-3/4"DIA.
W12 & W14	PL 3/8x3.1/2x0'-9"	3-3/4"DIA.
W16	PL 3/8x3.1/2x1'-0"	4-3/4"DIA.
W18	PL 3/8x3.1/2x1'-3"	5-3/4"DIA.
W21	PL 3/8x3.1/2x1'-6"	6-3/4"DIA.

2 TYPICAL BEAM TO BEAM CONNECTION

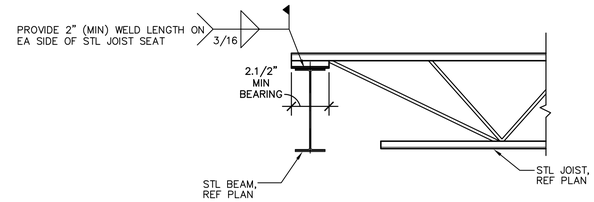

3 TYPICAL WELD LENGTH ON STL JOIST TO STL BEAM/STL PLATE CONNECTION

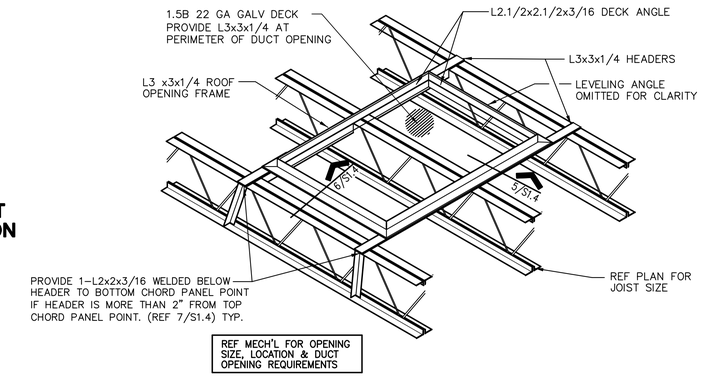

4 ROOF OPENING FRAME DETAIL

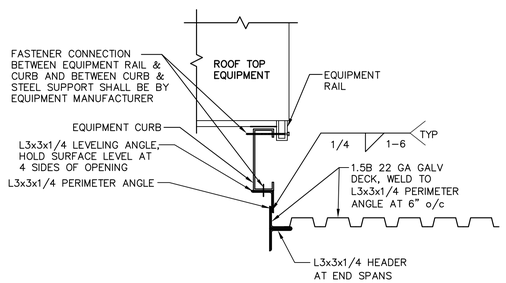

5 EQUIPMENT SUPPORT FRAME

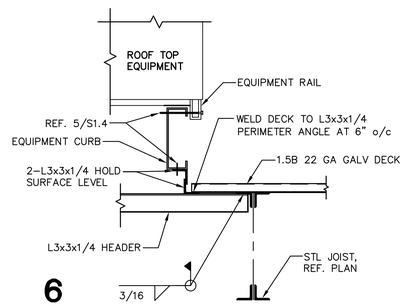

6

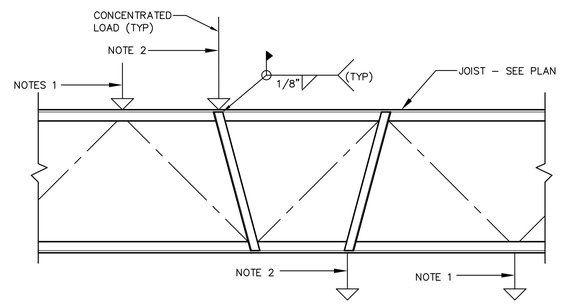

7 TYP. CONCENTRATED LOAD DETAIL

NOTES:

1. CONCENTRATED LOAD LOCATED AT JOIST PANEL POINT LOCATION - NO ADDTIONAL ANGLES REQUIRED.
2. CONCENTRATED LOAD (100 LBS. OR HEAVIER) NOT LOCATED AT JOIST PANEL POINT LOCATION - PROVIDE L2x2x1/4 TO PANEL POINT AS SHOWN.

No.	REVISIONS	BY

GMS ARCHITECTS
1150 paredes line rd.
brownsville
texas 78526
(956) 546-0110
fax (956) 546-0196

SAN BENITO CISD
ADDITIONS AND RENOVATIONS AT SAN BENITO HS AND SULLIVAN ELEMENTARY
SAN BENITO TEXAS

BID PACKAGE "A"
SAN BENITO
HIGH SCHOOL

STATE OF TEXAS
HERIBERTO CANAZOS
103450
LICENSED
PROFESSIONAL ENGINEER
8/5/19

COPYRIGHT 2019
GOMEZ MENDEZ SAENZ INC.
ARCHITECTS·PLANNERS

DATE	AUGUST 5, 2019
SCALE	As Shown
DRAWN	IG, JA, CW
JOB	192-539
SHEET	AS1.4

GREEN, RUBIANO & ASSOCIATES
CONSULTING STRUCTURAL ENGINEERS
1220 WEST HARRISON
HARLINGEN, TEXAS 78551
(956)428-4461 (956)428-0287 FAX
FIRM REGISTRATION # F-4145

COPYRIGHT 2019 BY GREEN, RUBIANO & ASSOCIATES

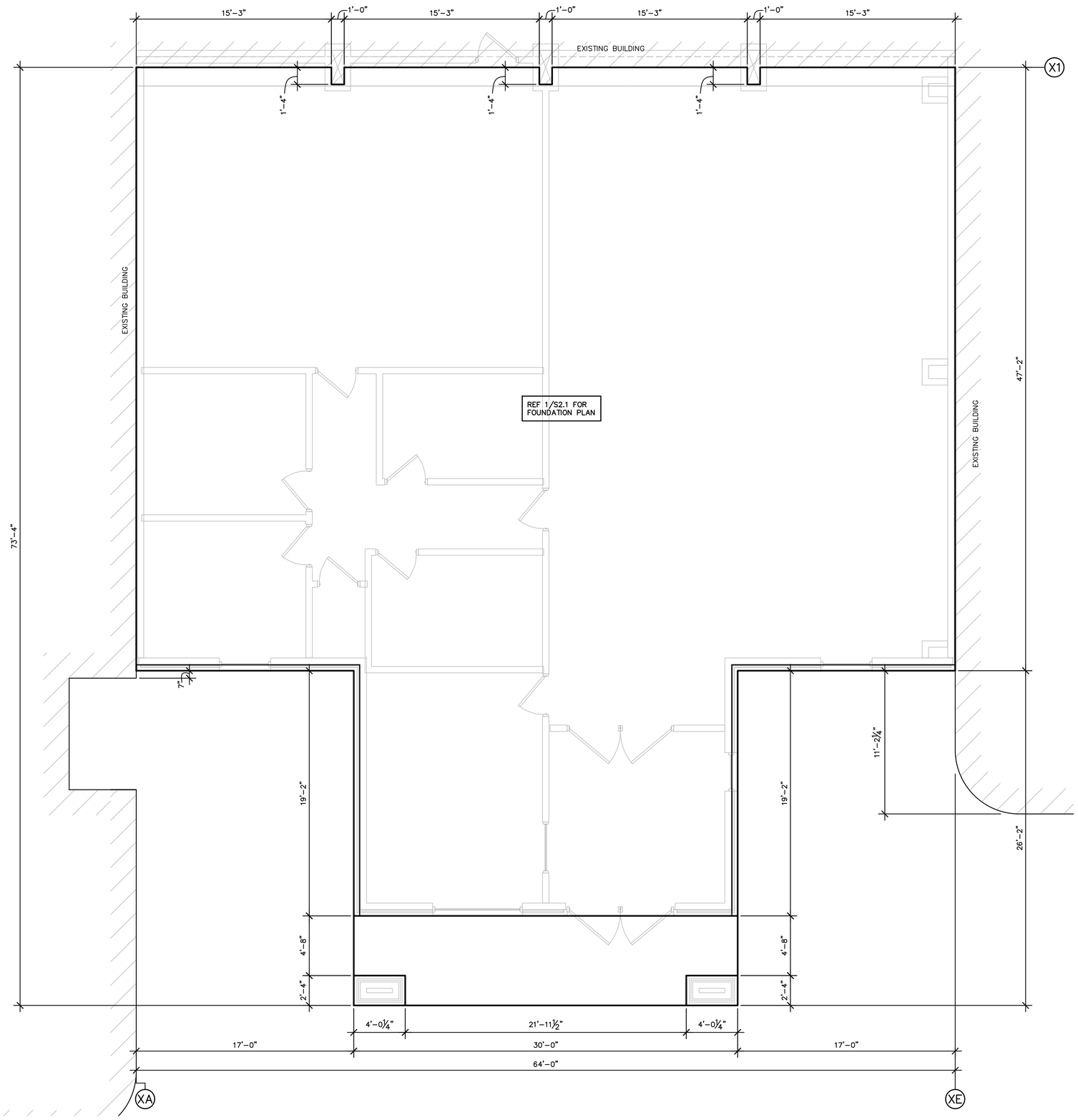

1 FOUNDATION DIMENSION LIMITS PLAN

1/4" = 1'-0"

HIGH SCHOOL

N
PLAN NORTH

NOTES:

1. REFERENCE ARCHITECTURAL & CIVIL FOR BUILDING LOCATION AND ORIENTATION.
2. REFERENCE 1/S2.1 FOR FOUNDATION PLAN.

CONTRACTOR SHALL FIELD VERIFY ALL DIMENSIONS & EXISTING CONDITIONS IN THE FIELD. CONTACT ENGINEER IF CONDITIONS VARY FROM THOSE SHOWN ON THE DRAWINGS.

No.	REVISIONS	BY

GMS ARCHITECTS

1150 paredes line rd.
brownsville
texas 78526
(956) 546-0110
fax (956) 546-0196

SAN BENITO CISD
ADDITIONS AND RENOVATIONS AT SAN BENITO HS AND SULLIVAN ELEMENTARY

SAN BENITO TEXAS

BID PACKAGE "A"
SAN BENITO
HIGH SCHOOL

STATE OF TEXAS
HERMBERTO CAVAZOS
103450
LICENSED
PROFESSIONAL ENGINEER
8/5/19

COPYRIGHT 2019
GOMEZ MENDEZ SAENZ INC.
ARCHITECTS-PLANNERS

DATE	AUGUST 5, 2019
SCALE	As Shown
DRAWN	IG, JA, CW
JOB	192-539
SHEET	AS2.0

GREEN, RUBIANO & ASSOCIATES
CONSULTING STRUCTURAL ENGINEERS
1230 WEST HARRISON
HARLINGEN, TEXAS 78551
(956)428-4461 (956)428-0287 FAX
FIRM REGISTRATION # F-4145

COPYRIGHT 2019 BY GREEN, RUBIANO & ASSOCIATES

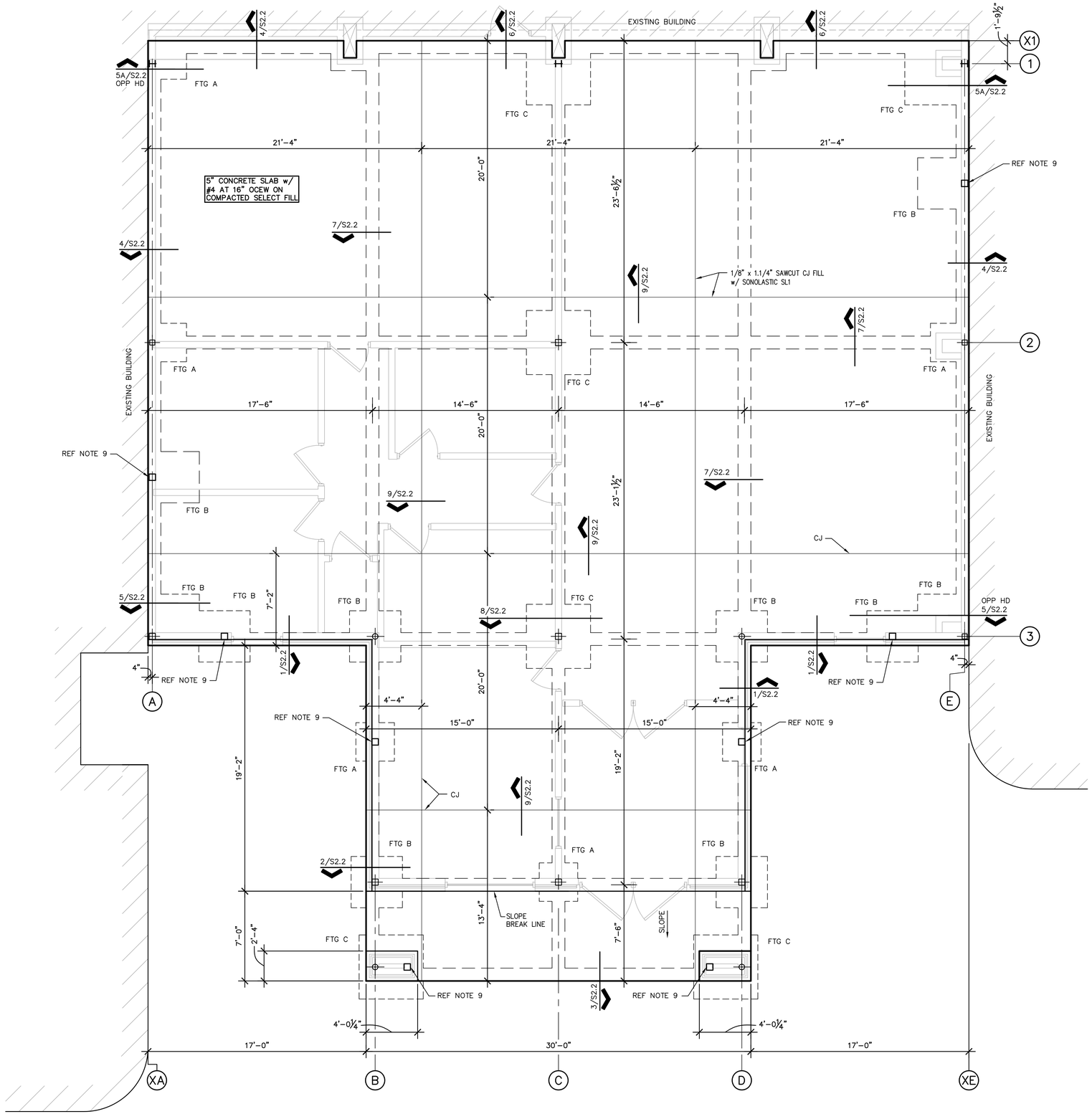

1 FOUNDATION PLAN

1/4" = 1'-0" HIGH SCHOOL

N
PLAN NORTH

NOTES:

1. REFERENCE ROOF FRAMING PLAN FOR COLUMN ANCHOR BOLT/ BASEPLATE LOCATIONS. FOUNDATION PLAN DIMENSIONS GENERALLY DENOTE GRADE BEAM CENTERLINE AND OUTSIDE FACE OF CONCRETE.
2. ALL CONDUIT GREATER THAN 1" IN DIAMETER SHALL BE RECESSED TO PROVIDE 1.1/2" CLEAR DISTANCE BETWEEN SLAB REBAR & CONDUIT.
3. MAINTAIN 2" MINIMUM CLEAR DISTANCE BETWEEN ALL CONDUIT IN SLAB.
4. A SINGLE CONDUIT (MAX 3" O.D.) MAY BE PLACED WITHIN THE BEAM CAGE. ALL CONDUIT IN BEAM CAGES TO BE TIED TO STIRRUPS MINIMUM OF 4" FROM HORIZONTAL BARS.
5. CRACK CONTROL JOINTS ARE NOTED ON THE PLANS. CONTRACTOR TO COORDINATE CHANGES WITH THE ENGINEER PRIOR TO FORMING FOUNDATION.
6. PLUMBING LINES SHALL NOT BE PLACED IN BOTTOM OF GRADE BEAM TRENCHES.
7. PLUMBING LINES PASSING THROUGH GRADE BEAMS SHALL BE SLEEVED. BEAMS SHALL BE DEEPENED AND BENT REBAR PROVIDED IF LOCATION OF DRAIN LINES REQUIRES CUTTING BOTTOM BARS. REFERENCE 10/S2.2.
8. ALL JOINTS TO BE CLEANED AND FILLED w/ SONOLASTIC SL1 (SONNEBORN). REFERENCE DETAIL 9/S2.2.
9. PLACE BASEPLATES AT INDICATED LOCATIONS FOR COLUMNS, WIND COLUMNS, AND DIAGONAL BRACES FLUSH w/ FINISH FLOOR.

FOOTING SCHEDULE

MARK	SIZE	REINFORCEMENT
FTG A	3'-0" x 3'-0"	#5 AT 12" O.C.E.W.
FTG B	4'-0" x 4'-0"	#5 AT 12" O.C.E.W.
FTG C	5'-0" x 5'-0"	#5 AT 12" O.C.E.W.

BASEPLATE SCHEDULE

COLUMN	PLATE TxWxL	ANCHORS
HSS5 x 5	3/4" x 9" x 9"	4-3/4" DIA x 8" WHS
HSS6 x 6	1" x 10" x 10"	4-3/4" DIA x 8" WHS
W6 x 25	1" x 8" x 8"	4-3/4" DIA x 8" WHS
5" DIA. PIPE	1" x 8" x 8"	4-3/4" DIA x 8" WHS

GREEN, RUBIANO & ASSOCIATES
CONSULTING STRUCTURAL ENGINEERS
1230 WEST HARRISON
HARLINGEN, TEXAS 78551
(956)428-4481 (956)428-0287 FAX
FIRM REGISTRATION # F-4145

COPYRIGHT 2019 BY GREEN, RUBIANO & ASSOCIATES

No.	REVISIONS	BY

GMS ARCHITECTS
1150 paredes line rd.
brownsville
texas 78526
(956) 546-0110
fax (956) 546-0196

SAN BENITO CISD
ADDITIONS AND RENOVATIONS AT SAN BENITO HS AND SULLIVAN ELEMENTARY
SAN BENITO TEXAS

BID PACKAGE "A"
SAN BENITO
HIGH SCHOOL

STATE OF TEXAS
HERMINIO CAVAZOS
103450
LICENSED
PROFESSIONAL ENGINEER
8/5/19

COPYRIGHT 2019
GOMEZ MENDEZ SAENZ INC.
ARCHITECTS-PLANNERS

DATE	AUGUST 5, 2019
SCALE	As Shown
DRAWN	IG, JA, CW
JOB	192-539
SHEET	AS2.1

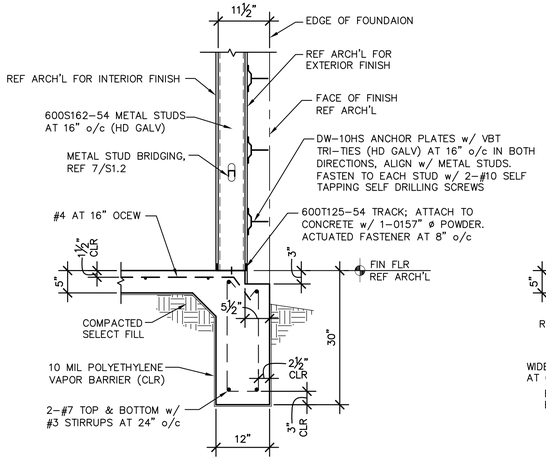

1

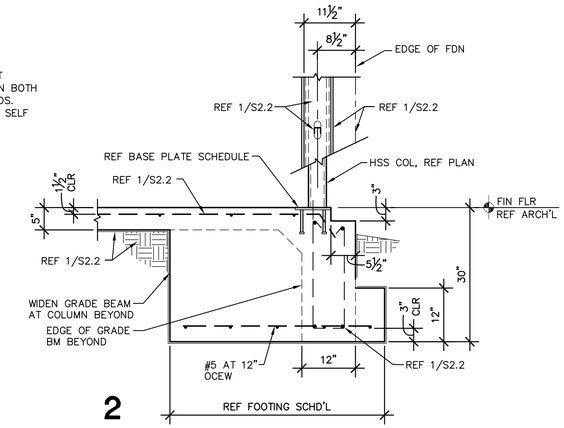

2

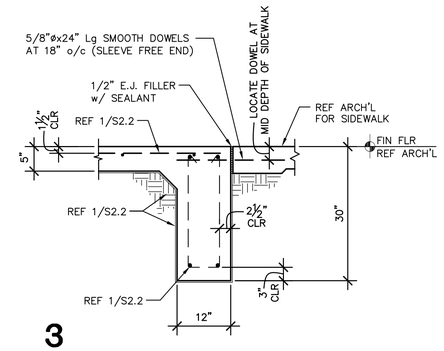

3

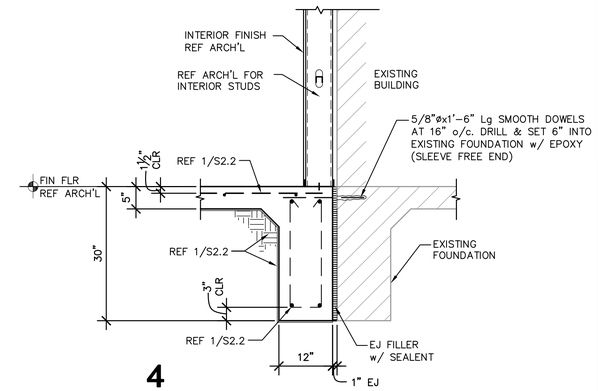

4

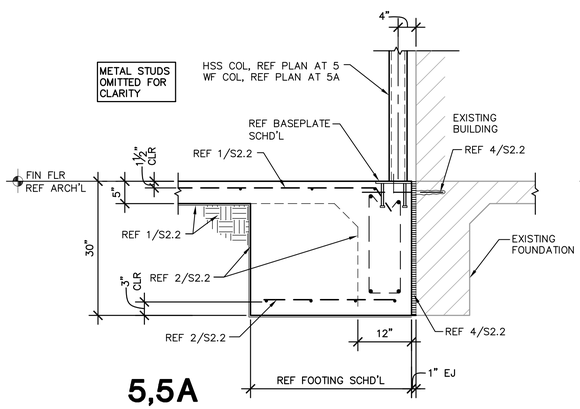

5,5A

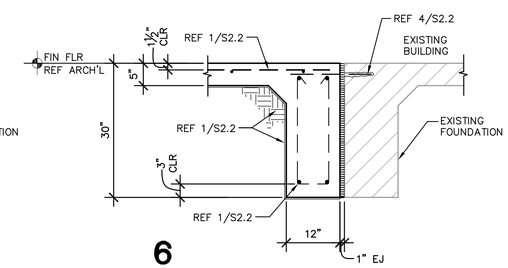

6

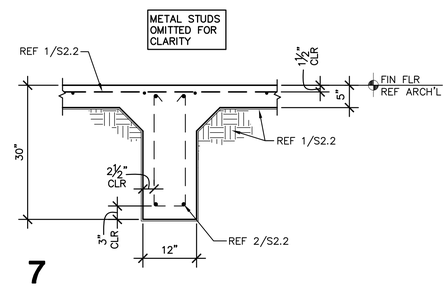

7

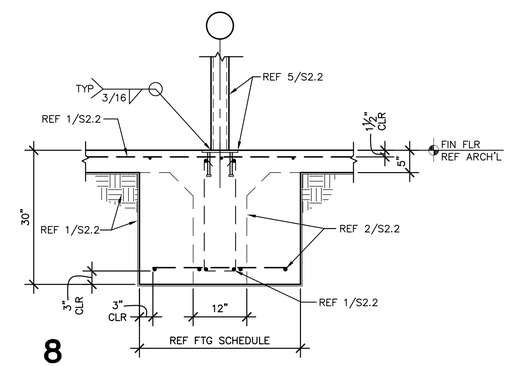

8

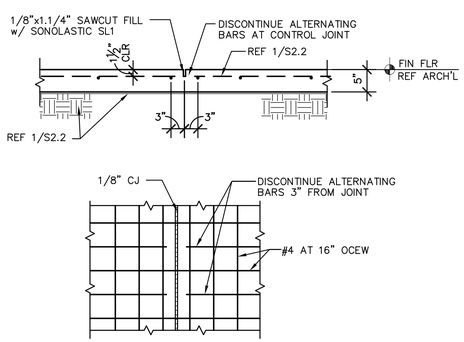

9 CONTROL JOINT

NOTE: ALL JOINTS ARE TO BE CLEANED AND FILLED WITH SONOLASTIC SL1 (SONNEBORN).

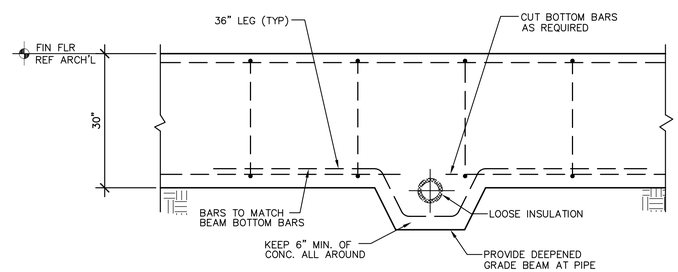

10 TOP OF SLEEVE INTERRUPTS REINFORCING

No.	REVISIONS	BY

GMS ARCHITECTS
1150 paredes line rd.
brownsville
texas 78526
(956) 546-0110
fax (956) 546-0196

SAN BENITO CISD
ADDITIONS AND RENOVATIONS AT SAN BENITO HS AND SULLIVAN ELEMENTARY
SAN BENITO TEXAS

BID PACKAGE "A"
SAN BENITO
HIGH SCHOOL

STATE OF TEXAS
HERIBERTO CAVAZOS
103450
LICENSED
PROFESSIONAL ENGINEER
8/5/19

COPYRIGHT 2019
GOMEZ MENDEZ SAENZ INC.
ARCHITECTS-PLANNERS

DATE	AUGUST 5, 2019
SCALE	As Shown
DRAWN	IG, JA, CW
JOB	192-539
SHEET	AS2.2

GREEN, RUBIANO & ASSOCIATES
CONSULTING STRUCTURAL ENGINEERS
1230 WEST HARRISON
HARLINGEN, TEXAS 78551
(956)428-4461 (956)428-0267 FAX
FIRM REGISTRATION # F-4146

COPYRIGHT 2019 BY GREEN, RUBIANO & ASSOCIATES

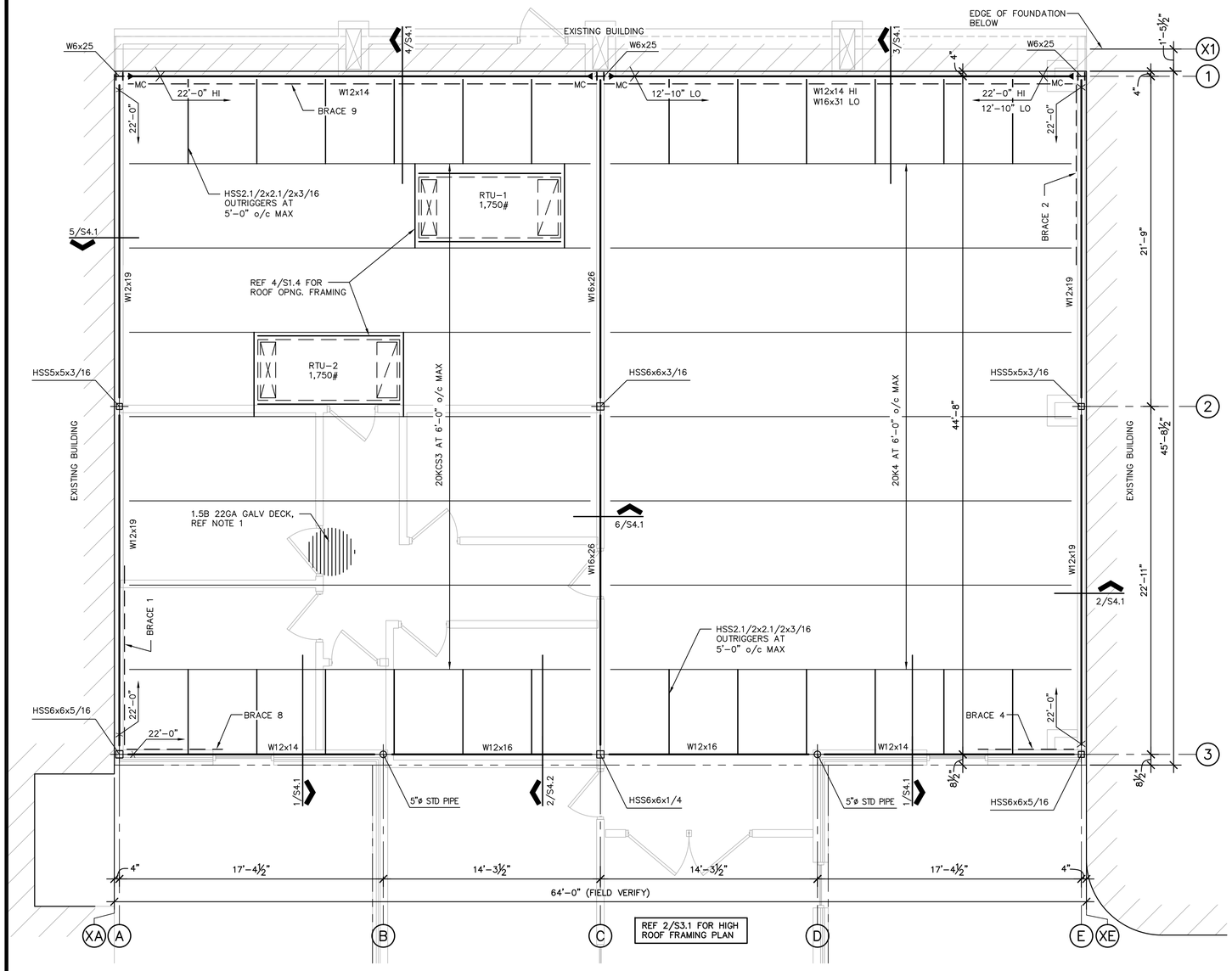

1 ROOF FRAMING PLAN

1/4" = 1'-0" HIGH SCHOOL

N PLAN NORTH

NOTES:

1. ROOF DECK SHALL BE 1.5B 22GA GALV DECK BY VULCRAFT OR APPROVED EQUAL. (Ip=0.155 IN⁴/FT; In=0.183 IN⁴/FT; SP=0.186 IN³/FT; Sn=0.192 IN³/FT; Fy=33KSI). ATTACH DECK TO SUPPORTS USING 5/8" PUDDLE WELDS ON A 36/5 PATTERN AND 2-#10 TEK SCREW SIDE LAP FASTENERS.
2. TOP OF BEAMS SHALL BE 22'-0" A.F.F. UNLESS NOTED OTHERWISE.
3. REFERENCE SHEETS S3.2 FOR BRACE PROFILES.
4. REFERENCE 4/S1.4 FOR ROOF OPENING FRAME DETAILS.
5. EXTERIOR METAL STUDS ARE SPACED AT 16" o/c MAXIMUM AND ADDITIONALLY AS REQUIRED AT EDGE OF EXTERIOR SHEATHING UNLESS NOTED OTHERWISE.
6. REFERENCE 1/S1.3 FOR TYPICAL STUD FRAMING AT EXTERIOR OUTSIDE BUILDING CORNER AND 2/S1.3 FOR TYPICAL STUD FRAMING AT EXTERIOR INSIDE BUILDING CORNER.
7. ▶ MC DENOTES MOMENT CONNECTION. REFERENCE DETAIL 8/S4.2.

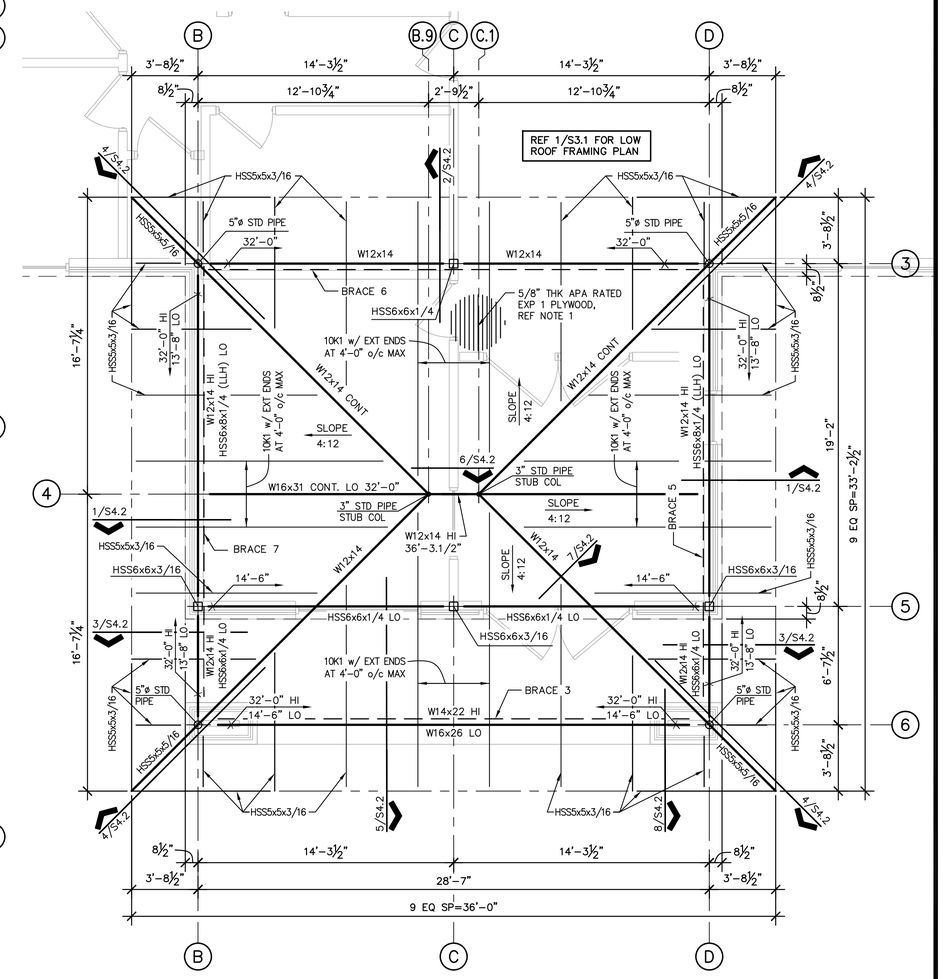

2 HIGH ROOF FRAMING PLAN

1/4" = 1'-0" HIGH SCHOOL

N PLAN NORTH

NOTES:

1. ROOF SHEATHING SHALL BE 5/8" THK APA RATED EXPOSURE 1 PLYWOOD SPAN RATED 32/16.
2. TOP OF BEAMS SHALL BE 32'-0" A.F.F. UNLESS NOTED OTHERWISE.
3. REFERENCE SHEETS S3.2 FOR BRACE AND FRAME PROFILES.
4. EXTERIOR METAL STUDS ARE SPACED AT 16" o/c MAXIMUM AND ADDITIONALLY AS REQUIRED AT EDGE OF EXTERIOR SHEATHING UNLESS NOTED OTHERWISE.
5. REFERENCE 1/S1.3 FOR TYPICAL STUD FRAMING AT EXTERIOR OUTSIDE BUILDING CORNER AND 2/S1.3 FOR TYPICAL STUD FRAMING AT EXTERIOR INSIDE BUILDING CORNER.

ROOF SHEATHING NAILING SCHEDULE
8d NAILS AT 4" o/c PERIMETER OF SHEET AND 6" o/c AT INTERIOR SUPPORTS

GREEN, RUBIANO & ASSOCIATES
CONSULTING STRUCTURAL ENGINEERS
1320 WEST HARRISON
HARLINGEN, TEXAS 78551
(956)428-4481 (956)428-0287 FAX
FIRM REGISTRATION # F-4146

COPYRIGHT 2019 BY GREEN, RUBIANO & ASSOCIATES

No.	REVISIONS	BY

GMS ARCHITECTS
1150 paredes line rd.
brownsville
texas 78526
(956) 546-0110
fax (956) 546-0196

SAN BENITO CISD ADDITIONS AND RENOVATIONS AT SAN BENITO HS AND SULLIVAN ELEMENTARY

SAN BENITO TEXAS

BID PACKAGE "A"
SAN BENITO HIGH SCHOOL

STATE OF TEXAS
HERMBERTO CAVAZOS
103450
LICENSED
PROFESSIONAL ENGINEER
8/5/19

COPYRIGHT 2019
GOMEZ MENDEZ SAENZ INC.
ARCHITECTS-PLANNERS

DATE	AUGUST 5, 2019
SCALE	As Shown
DRAWN	IG, JA, CW
JOB	192-539
SHEET	AS3.1

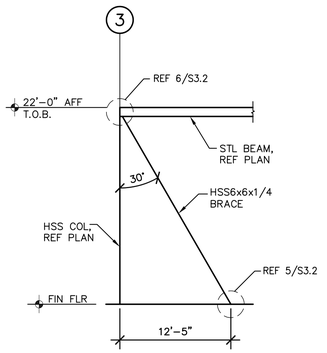

BRACE 1
ALONG GRID A

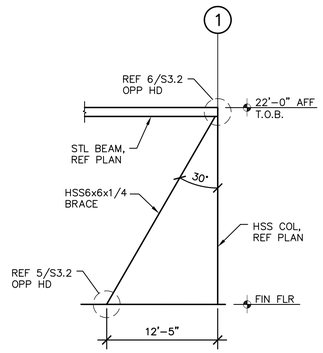

BRACE 2
ALONG GRID E

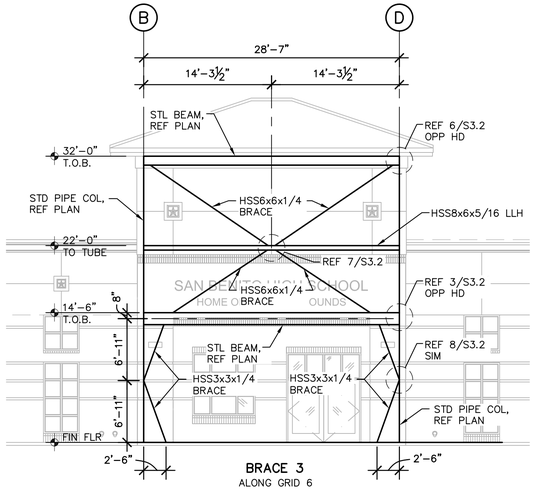

BRACE 3
ALONG GRID 6

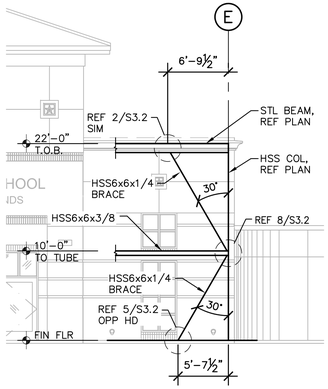

BRACE 4
ALONG GRID 3

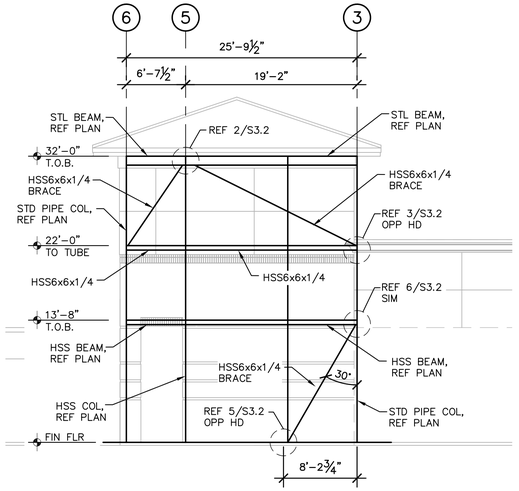

BRACE 5
ALONG GRID D

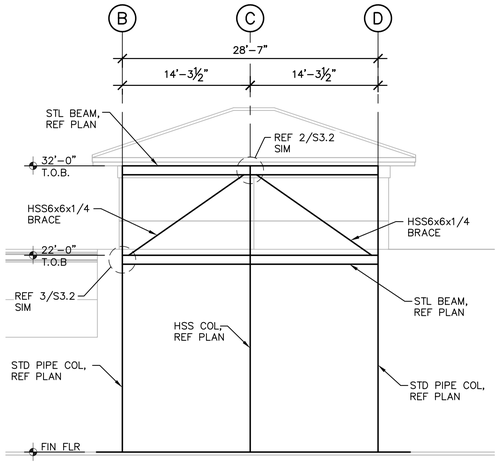

BRACE 6
ALONG GRID 3

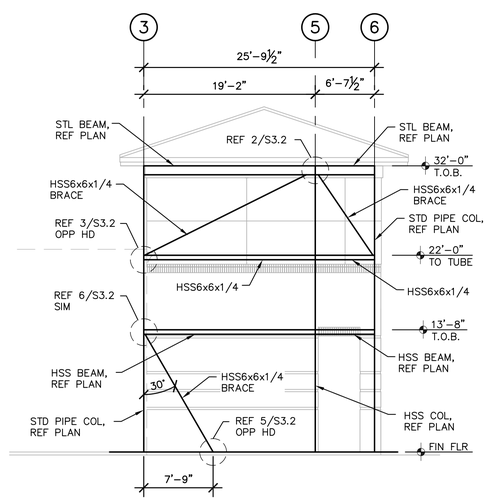

BRACE 7
ALONG GRID B

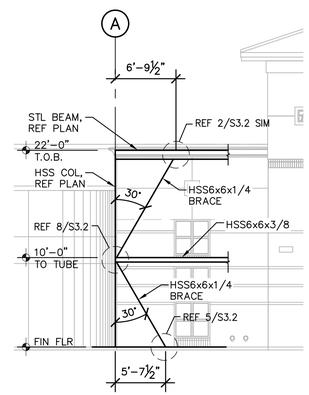

BRACE 8
ALONG GRID 3

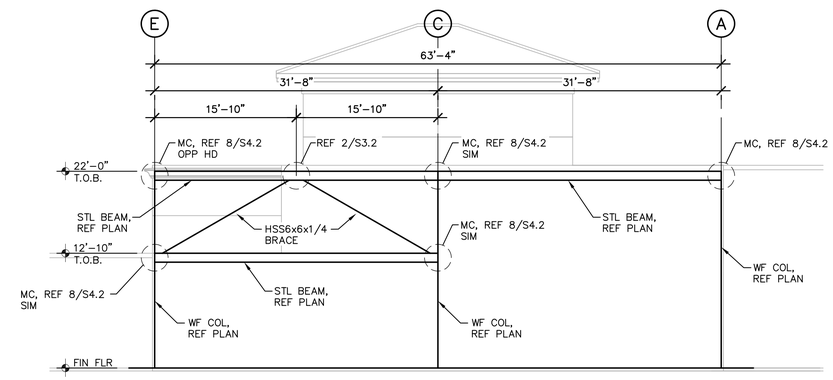

BRACE 9
ALONG GRID 1

1 BRACE PROFILES

1/8" = 1'-0"

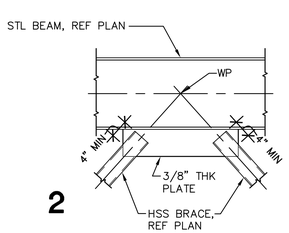

2

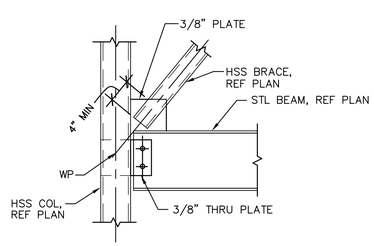

3

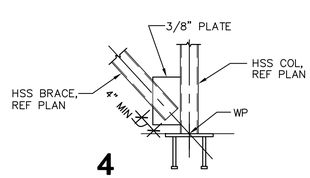

4

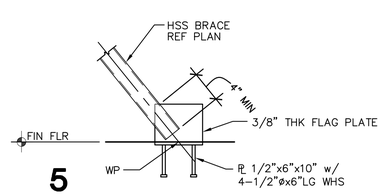

5

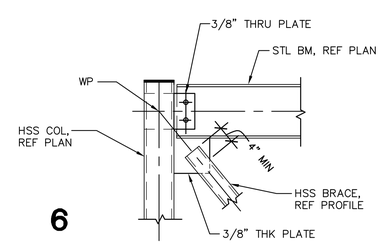

6

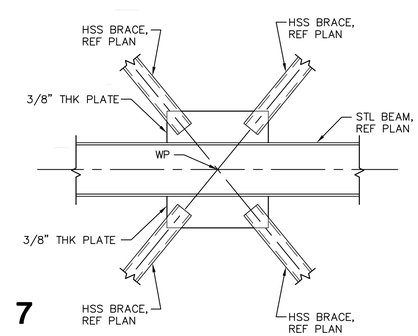

7

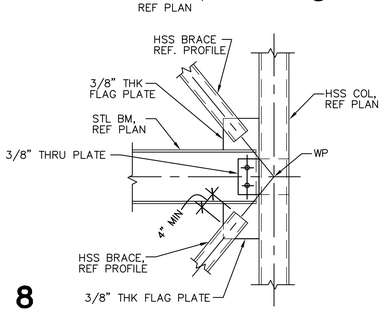

8

No.	REVISIONS	BY

GMS ARCHITECTS
1150 paredes line rd.
brownsville
texas 78526
(956) 546-0110
fax (956) 546-0196

SAN BENITO CISD ADDITIONS AND RENOVATIONS AT SAN BENITO HS AND SULLIVAN ELEMENTARY

SAN BENITO TEXAS

BID PACKAGE "A"
SAN BENITO
HIGH SCHOOL

STATE OF TEXAS
HERMBERTO CAVAZOS
103450
LICENSED
PROFESSIONAL ENGINEER
8/5/19

COPYRIGHT 2019
GOMEZ MENDEZ SAENZ INC.
ARCHITECTS-PLANNERS

DATE	AUGUST 5, 2019
SCALE	As Shown
DRAWN	IG, JA, CW
JOB	192-539
SHEET	AS3.2

GREEN, RUBIANO & ASSOCIATES
CONSULTING STRUCTURAL ENGINEERS
1230 WEST HARRISON
HARLINGEN, TEXAS 78551
(956)428-4461 (956)428-0267 FAX
FIRM REGISTRATION # F-4145

COPYRIGHT 2019 BY GREEN, RUBIANO & ASSOCIATES

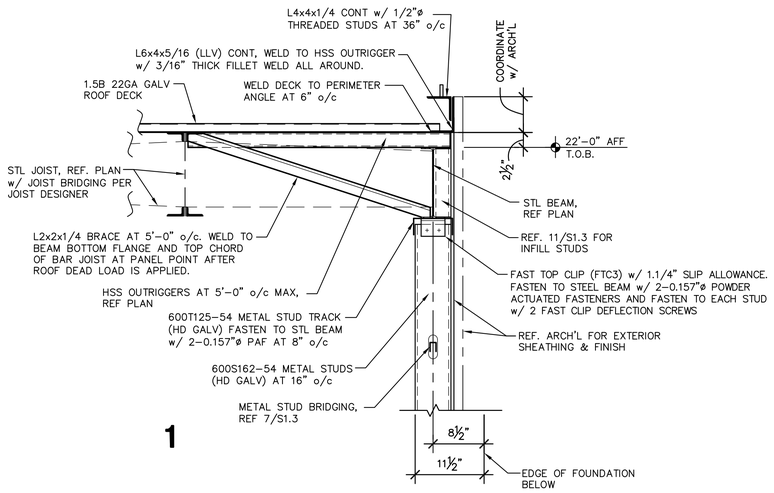

1

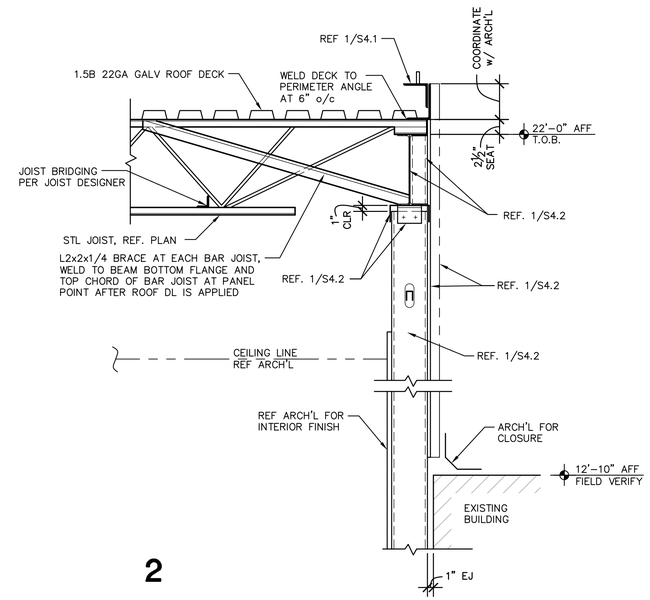

2

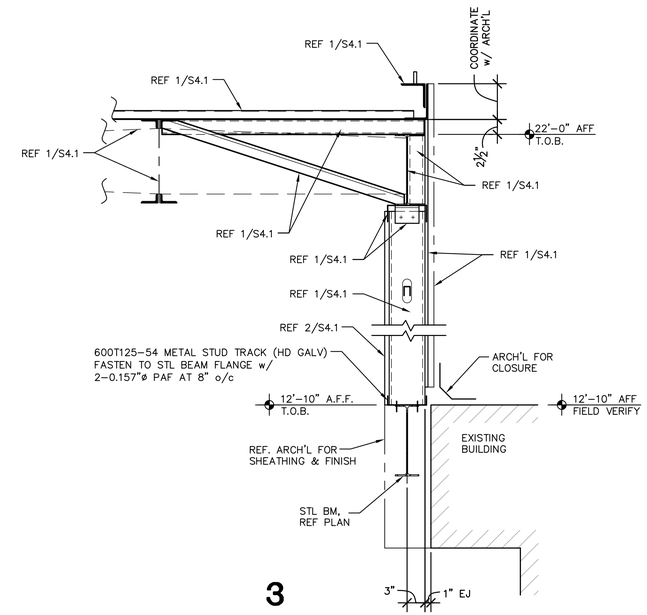

3

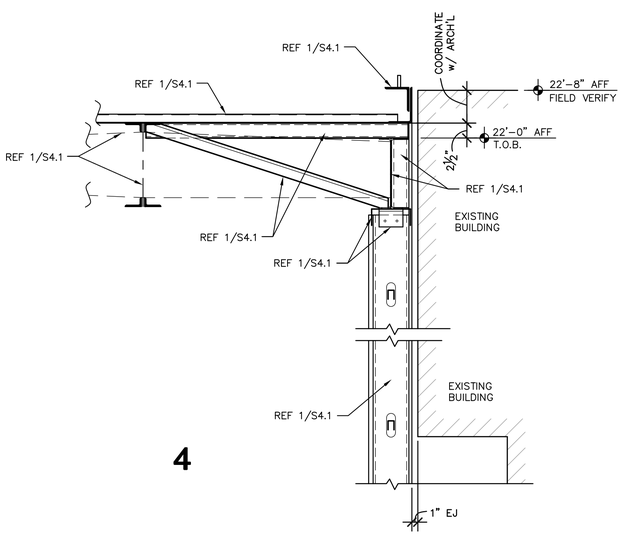

4

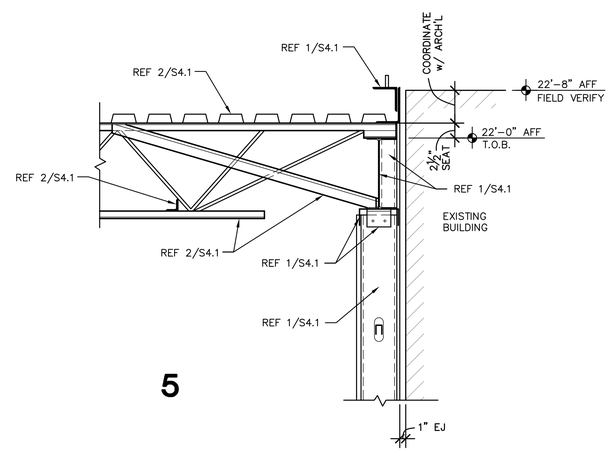

5

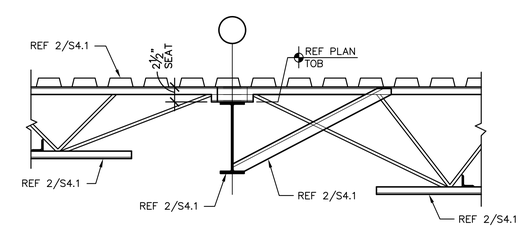

6 TYPICAL INTERIOR BEAM

NOTE: REFER TO PLAN NOTES FOR ROOF DECK ATTACHMENT.

No.	REVISIONS	BY

GMS ARCHITECTS

1150 paredes line rd.
brownsville
texas 78526
(956) 546-0110
fax (956) 546-0196

SAN BENITO CISD
ADDITIONS AND RENOVATIONS AT SAN BENITO HS AND SULLIVAN ELEMENTARY

SAN BENITO TEXAS

BID PACKAGE "A"
SAN BENITO
HIGH SCHOOL

STATE OF TEXAS
HERIBERTO CAVAZOS
103450
LICENSED
PROFESSIONAL ENGINEER
8/5/19

COPYRIGHT 2019
GOMEZ MENDEZ SAENZ INC.
ARCHITECTS-PLANNERS

DATE	AUGUST 5, 2019
SCALE	As Shown
DRAWN	IG, JA, CW
JOB	192-539
SHEET	AS4.1

GREEN, RUBIANO & ASSOCIATES
CONSULTING STRUCTURAL ENGINEERS
1230 WEST HARRISON
HARLINGEN, TEXAS 78551
(956)428-4481 (956)428-0267 FAX
FIRM REGISTRATION # F-4145

COPYRIGHT 2019 BY GREEN, RUBIANO & ASSOCIATES

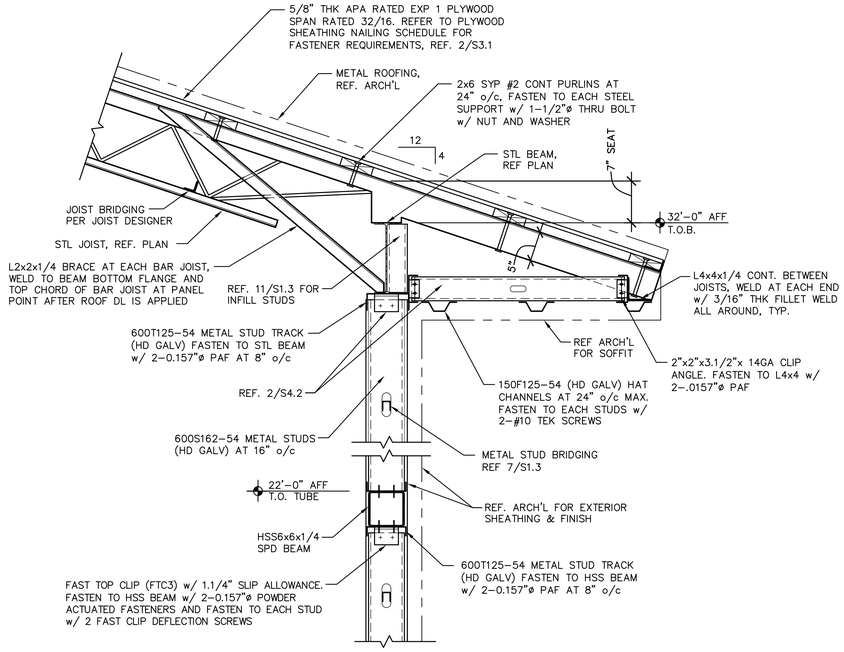

1

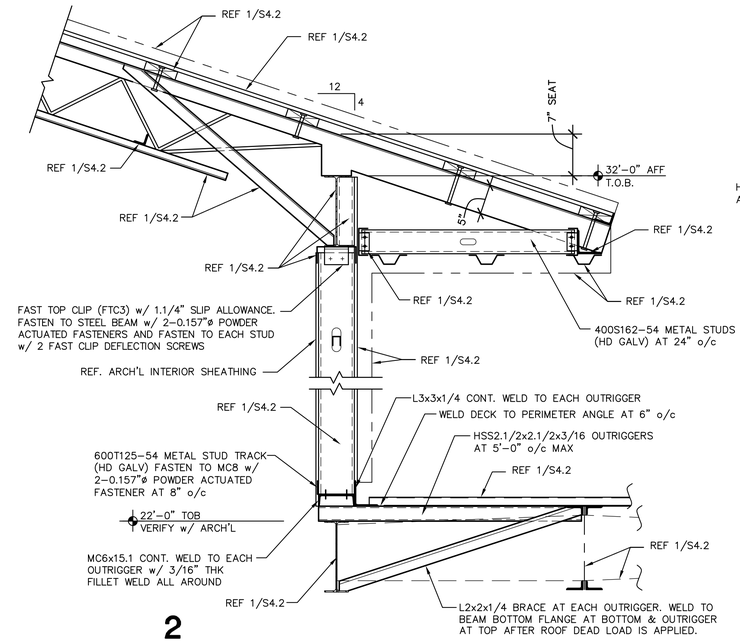

2

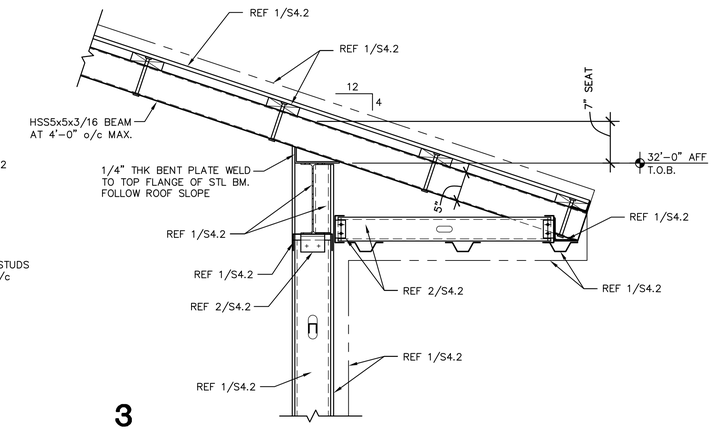

3

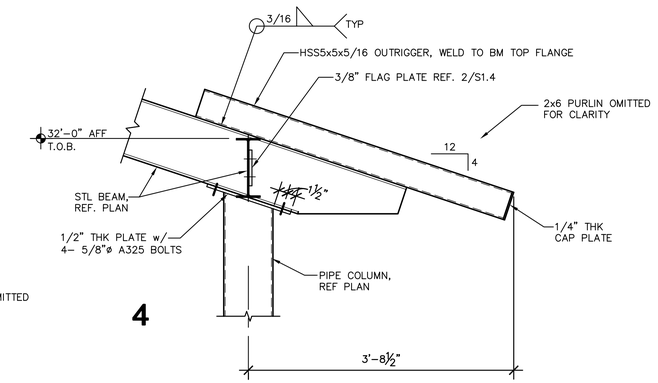

4

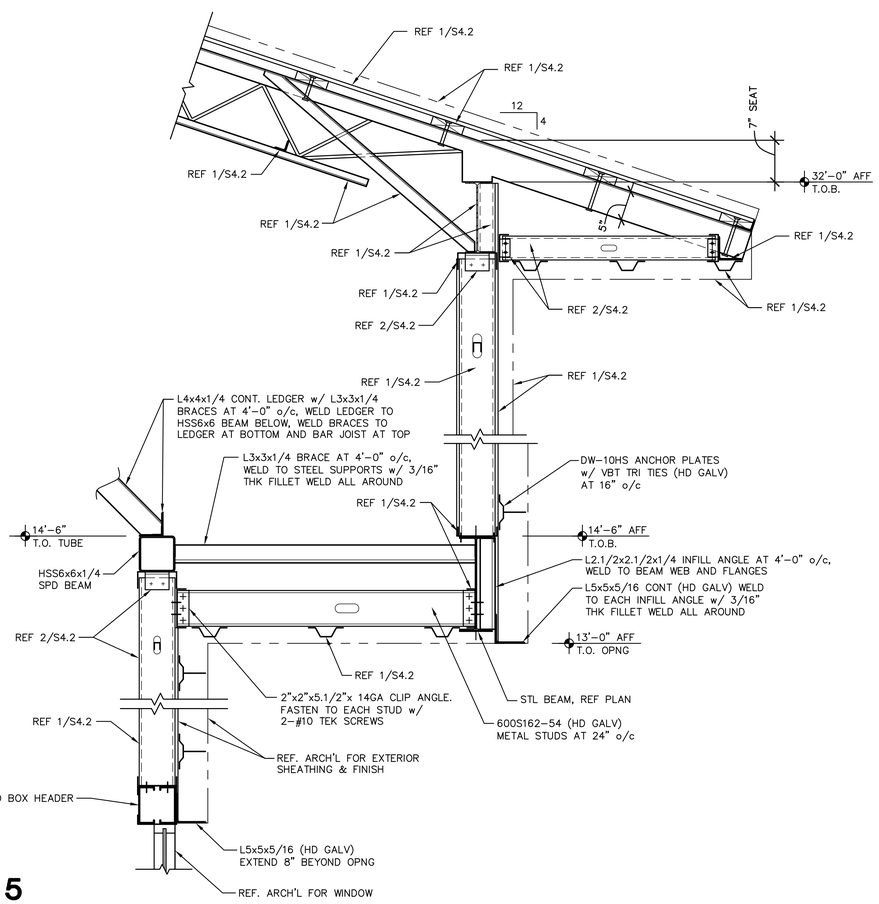

5

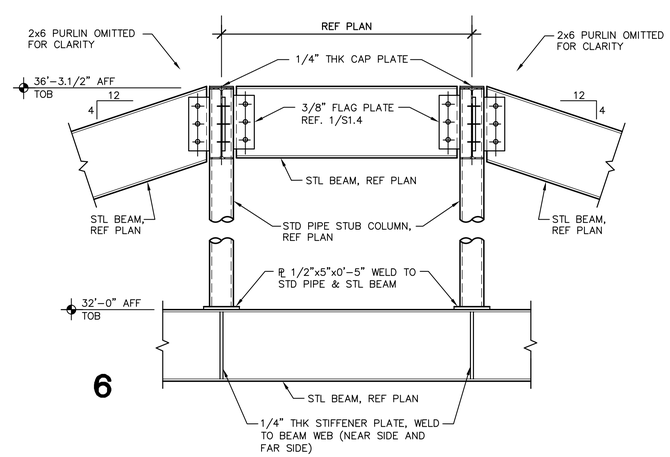

6

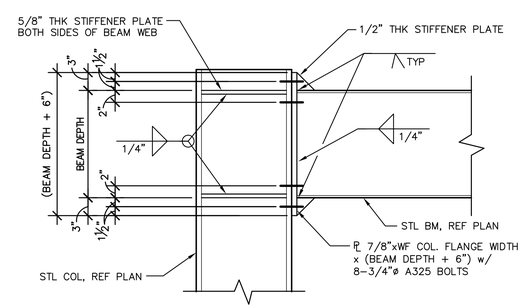

8 **TYPICAL WF BEAM-TO-WF COLUMN MOMENT CONNECTION DETAIL AT TOP OF COLUMN**

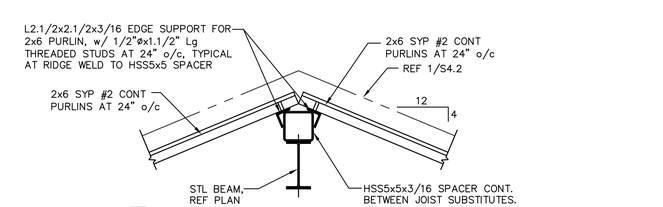

7

No.	REVISIONS	BY

GMS ARCHITECTS
1150 paredes line rd.
brownsville
texas 78526
(956) 546-0110
fax (956) 546-0196

SAN BENITO CISD
ADDITIONS AND RENOVATIONS AT SAN BENITO HS AND SULLIVAN ELEMENTARY
SAN BENITO TEXAS

BID PACKAGE "A"
SAN BENITO
HIGH SCHOOL

STATE OF TEXAS
HERMBERTO CAVAZOS
103450
LICENSED
PROFESSIONAL ENGINEER
8/5/19

COPYRIGHT 2019
GOMEZ MENDEZ SAENZ INC.
ARCHITECTS-PLANNERS

DATE	AUGUST 5, 2019
SCALE	As Shown
DRAWN	IG, JA, CW
JOB	192-539
SHEET	AS4.2

GREEN, RUBIANO & ASSOCIATES
CONSULTING STRUCTURAL ENGINEERS
1220 WEST HARRISON
HARLINGEN, TEXAS 78551
(956)428-4481 (956)428-0267 FAX
FIRM REGISTRATION # F-4146

COPYRIGHT 2019 BY GREEN, RUBIANO & ASSOCIATES

COORDINATION:

1. GENERAL:
   a. CONTRACTOR SHALL REVIEW COMPLETE DOCUMENTS PRIOR TO SUBMITTAL OF PROPOSAL TO GAIN COMPLETE UNDERSTANDING OF PROJECT SCOPE, WORK BY OTHERS, AND MECHANICAL WORK ASSOCIATED WITH OTHER DISCIPLINES.
   b. IT IS NOT THE INTENT OF THESE DOCUMENTS TO DICTATE WHO MUST DO THE WORK. ALL WORK SHOWN IS THE RESPONSIBILITY OF THE (PRIME) CONTRACTOR. COORDINATE MECHANICAL WITH OTHER TRADES SUCH AS PLUMBING, ELECTRICAL AND STRUCTURAL WORK. COORDINATE SCHEDULE OF WORK WITH ALL SUB–CONTRACTORS TO ACHIEVE SMOOTH FLOW OF CONSTRUCTION.
   c. TIME OR MONEY ALLOWANCES WILL NOT BE MADE TO ACCOMMODATE UTILITY CONFLICTS THAT CAN BE REASONABLY RESOLVED BY COORDINATION DURING SHOP DRAWING STAGE.
2. SITE:
   a. TIME OR MONEY ALLOWANCES WILL NOT BE MADE TO ACCOMMODATE UTILITY CONFLICTS THAT CAN BE REASONABLY RESOLVED BY COORDINATION DURING SHOP DRAWING STAGE.
3. ARCHITECTURAL AND STRUCTURAL:
   a. REFER TO ARCHITECTURAL AND STRUCTURAL PLANS FOR DETAILS OF CONSTRUCTION, INCLUDING BEAMS, FLOOR AND WALL PENETRATIONS, CHASES, AND REFLECTED CEILING PLANS. VERIFY OPENING SIZES WITH EQUIPMENT FURNISHED.
   b. SLEEVE ALL EXTERIOR WALL AND GRADE BEAM PENETRATIONS. GRADE BEAM PENETRATIONS SHALL BE MADE WITHIN MIDDLE 1/3 OF VERTICAL SPAN OF BEAM.
   c. SEAL AROUND DUCTS AND PIPING AT ALL WALLS, A/C ROOMS AND WALL LOUVER PENETRATIONS WITH FIREPROOF CAULKING. RE: SPECS. PROVIDE ESCUTCHEON PLATES AND FLASHING AROUND PENETRATION, BOTH INSIDE AND OUTSIDE, TO PROVIDE FINISHED LOOK.
4. SPATIAL COORDINATION:
   a. COORDINATE ALL WORK WITH OTHER TRADES; COORDINATE SCHEDULE OF WORK WITH ALL SUB–CONTRACTORS TO ACHIEVE SMOOTH FLOW OF CONSTRUCTION.
   b. SPACES ABOVE CEILING ARE CONGESTED. DESIGN INTENT IS THAT UTILITIES BE INSTALLED TIGHT AGAINST CEILING STRUCTURE TO EXTENT POSSIBLE, WHILE RETAINING ADEQUATE MAINTENANCE ACCESS PER CODES.
   c. IN CASE OF CONFLICTS, ITEMS SHALL BE ARRANGED ACCORDING TO THE FOLLOWING PRIORITIES: LIGHTING, FIRE PROTECTION, HVAC. PROVIDE OFFSETS/RISES/DROPS REQUIRED TO RESOLVE CONFLICTS WITH OTHER UTILITIES, AND TO ACCOMMODATE ALL UTILITIES ABOVE CEILINGS.
   d. IN GENERAL, REROUTE SMALLER DUCTS/PIPES THROUGH JOISTS TO RESOLVE CONFLICTS WITH LARGER. PERFORM REROUTING IN MOST EFFICIENT MANNER POSSIBLE, AND IN ACCORDANCE WITH INDUSTRY STANDARDS.
   e. PROVIDE COORDINATION DRAWINGS OF REFLECTED CEILING PLAN AND SECTION ABOVE CEILING SHOWING WORK OF ALL AFFECTED TRADES. DO NOT PROCEED WITH FABRICATION WORK UNTIL COORDINATION DRAWINGS HAVE BEEN APPROVED BY A/E.
   f. SEE ELECTRICAL PLANS FOR EXACT LOCATION OF ELECTRICAL PANELS TO AVOID DUCTWORK AND PIPING RUNNING OVER THESE AREAS. COORDINATE WITH ELECTRICAL CONTRACTOR.
   g. LOCATE AIR DEVICES AS SHOWN. COORDINATE WITH OTHER TRADES TO AVOID CONFLICT AND ADJUST LOCATION IF NEEDED WITHOUT COMPROMISING AIR DEVICES PERFORMANCE.
5. CONTROLS:
   a. REFER TO SPECIFICATIONS FOR CONTROL COMPONENTS AND DEVICES TO BE COORDINATED WITH MECHANICAL WORK.
   b. CONTROLS CONTRACTOR SHALL PROVIDE BUILDING AUTOMATION SYSTEM (BAS) THAT CONTROLS EQUIPMENT SHOWN ON DRAWINGS. CONTROLS CONTRACTOR IS RESPONSIBLE FOR INSTALLING LOW VOLTAGE POWER AND COMMUNICATIONS. REFERENCE SPECIFICATIONS FOR CONTROL COMPONENTS AND SEQUENCING TO BE COORDINATED W/ MECH. WORK.
   c. DRAWINGS SHOW GENERAL LOCATION OF DDC SENSORS (T, RH, AND CO2). UNLESS NOTED OTHERWISE, INSTALL SENSORS AT 48" ABOVE FINISHED FLOOR. WIRING SHALL BE IN CONCEALED WALLS. IN CASE OF CONFLICTS WITH FURNITURE, WINDOWS, ETC., COORDINATE EXACT LOCATION WITH ARCHITECT AND ENGINEER.

CODES & ORDINANCES:

1. GENERAL:
   a. UNLESS DRAWINGS OR SPECIFICATIONS HAVE MORE STRINGENT REQUIREMENTS, PERFORM ALL WORK PER APPLICABLE VERSION OF INTERNATIONAL BUILDING CODES, AND LOCAL CODES AND ORDINANCES.
   b. PRIOR TO SUBMITTING PROPOSAL, NOTIFY ENGINEER OF ANY ASPECTS OF DESIGN WHICH ARE THOUGHT TO BE IN NONCOMPLIANCE WITH APPLICABLE CODES.
2. PERMITS:
   a. CONTRACTOR IS RESPONSIBLE FOR ALL PERMITS AND FEES ASSOCIATED WITH PROJECT, INCLUDING FEES FOR INSPECTIONS, APPLICATIONS, AND PROVISION OF NEW SERVICES.
   b. CONTRACTOR WHO WILL ACTUALLY PERFORM WORK MUST APPLY FOR ALL REQUIRED PERMITS.
4. APPROVALS AND INSPECTIONS:
   a. OBTAIN APPROVAL FROM CITY FIRE DEPARTMENT AND BUILDING AND SAFETY DEPARTMENT PRIOR TO INSTALLATION OF ANY FIRE RELATED ITEMS.
   b. COORDINATE PRESSURE TESTS, INSPECTIONS AND APPROVAL FOR ALL SYSTEMS WITH PERMITTING OFFICER, OWNER AND ENGINEER.

GENERAL NOTES:

1. CONTRACT RELATED:
   a. COORDINATE WORK AMONG ALL DISCIPLINES. IT IS NOT THE INTENT OF THESE DOCUMENTS TO DICTATE WHO MUST DO THE WORK. ALL WORK SHOWN IS THE RESPONSIBILITY OF THE (PRIME) CONTRACTOR.
   b. WORK TO BE DONE UNDER ALLOWANCES BECOMES AN INTEGRAL PART OF THE PROJECT AND RESPONSIBILITY OF CONTRACTOR ONCE ALLOWANCE IS APPROVED.
   c. CONTRACTOR SHALL NOT PROCEED WITH ANY WORK INVOLVING A CHANGE IN PROJECT SCOPE OR COST WITHOUT FIRST HAVING OBTAINED ENGINEER'S APPROVAL IN WRITING. UNLESS ENGINEER HAS AGREED TO SUCH CHANGE PRIOR TO IT BEING DONE, AND HAS AGREED THAT AN INCREASE IN COST ASSOCIATED WITH SUCH CHANGE IS WARRANTED; CONTRACTOR WILL NOT BE REIMBURSED FOR SUCH CHANGE.
2. TEST & BALANCE:
   a. TEST & BALANCE SHALL BE PERFORMED UNDER GENERAL CONTRACTOR, SEPARATE FROM MECHANICAL CONTRACT. DURING BIDDING, CONTRACTOR SHALL SUBMIT A COPY OF EVIDENCE THAT TAB AGENT MEETS THE QUALIFICATIONS SPECIFIED UNDER DIV. 23 SECTION 230593 TO PRIME CONTRACTOR.
   b. TEST & BALANCE TO COORDINATE MINIMUM AND MAXIMUM OUTSIDE AIR DAMPER SETTINGS WITH DDC CONTROLS AND ENGINEER. PROVIDE TIME ALLOTMENT FOR MULTIPLE DAMPER SETTINGS IN SOME CASES.
   c. CONTRACTOR SHALL COORDINATE TAB ACTIVITIES WITH TAB CONTRACTOR.

PIPING

1. DRAWINGS ARE DIAGRAMMATIC IN NATURE. FOR CLARITY SAKE, MOST PIPING OFFSETS/RISES/DROPS ARE NOT SHOWN IN DRAWINGS.
2. PROVIDE LINE SIZE MANUAL ISOLATION VALVES AT ALL EQUIPMENT AND AT ALL MAJOR PIPING TAKE OFFS. INSTALL ISOLATION VALVES IN ACCESSIBLE LOCATIONS.
3. PROVIDE EXPANSION JOINTS PER SPECIFICATIONS AND MANUFACTURER'S RECOMMENDATIONS.
4. ALL PIPING WELDS MUST BE WIRE–BRUSHED AND PAINTED A MINIMUM OF 12" ON EITHER SIDE OF WELD PRIOR TO INSULATION.
5. INSULATE PER SPECIFICATIONS ALL PIPING, VALVES, FITTINGS, AND COLD SURFACES THAT ARE CAPABLE OF GENERATING CONDENSATION.
6. PROVIDE P/T TEST PORT WITHIN 6 INCHES OF EVERY PRESSURE GAGE AND THERMOWELL. SEE PIPING SCHEMATIC FOR LOCATIONS.
7. PROVIDE LONG STEM CHILLED WATER VALVES TO AVOID CONFLICT WITH INSULATION

EQUIPMENT:

1. EQUIPMENT INSPECTION:
   a. FIELD VERIFY ALL CONDITIONS AND MEASURE DIMENSIONS WITHIN THE BUILDING PRIOR TO ORDERING EQUIPMENT AND/OR PROCEEDING WITH INSTALLATION.
   b. ALL EQUIPMENT SHALL BE FACTORY TESTED, AND CONTRACTOR SHALL VERIFY EQUIPMENT CONDITION PRIOR TO INSTALLATION. CONTRACTOR IS RESPONSIBLE FOR EQUIPMENT DAMAGED DURING MOVING AND INSTALLATION.
   c. EQUIPMENT FOUND DEFECTIVE PRIOR TO FINAL ACCEPTANCE SHALL BE REPLACED AT NO COST TO OWNER.
2. EQUIPMENT ACCESS:
   a. FOR EQUIPMENT WHICH MAY REQUIRE PERIODIC SERVICING AND WHICH IS LOCATED ABOVE A SUSPENDED CEILING, CONTRACTOR IS TO PROVIDE A MARKER ON CEILING GRID WHICH CLEARLY INDICATES WHICH CEILING TILE IS TO BE REMOVED TO MOST CONVENIENTLY ACCESS EQUIPMENT SIDE NEEDING SERVICING. THE MARKER IS TO BE ROUND DOT OF HEAVY DUTY COLORED PAPER, WITH DIRECTION INDICATION, WITH ADHESIVE BACKING. OBTAIN OWNER APPROVAL FOR COLOR, SIZE, AND TYPE PRIOR TO INSTALLATION.
   b. PROVIDE MANUFACTURER RECOMMENDED AND CODE ENFORCED CLEARANCES AROUND EQUIPMENT. MAINTAIN 36" CLEAR IN FRONT OF VAV BOX CONTROLLER, ELECTRIC HEATERS, ETC.
   c. INSTALL ALL VALVES, CONTROLS, DAMPERS, FANS, ETC. IN ACCESSIBLE LOCATIONS. PROVIDE ADEQUATELY SIZED ACCESS DOORS WHERE REQUIRED.
3. EQUIPMENT INSTALLATION:
   a. PROVIDE SPRING HANGER TYPE VIBRATION ISOLATORS TO SUPPORT SUSPENDED AHUS, FANS AND OTHER POWERED VIBRATING EQUIPMENT. PROVIDE FLEXIBLE DUCT CONNECTORS.
   b. FOR ALL AIR CONDITIONING UNITS WHICH ARE LOCATED ABOVE SUSPENDED CEILINGS, OR ABOVE HARDWOOD FLOORS, OR OTHER BUILDING SURFACES / MATERIALS WHICH COULD BE DAMAGED BY LEAKING WATER, PROVIDE A SECONDARY DRAIN PAN BENEATH THE UNIT, WITH EITHER: A) A SEPARATE CONDENSATE DRAIN LINE, COPPER, INSULATED WITH 1/2" ARMAFLEX, AND PIPED TO A SUITABLE DISPOSAL POINT (SUCH AS TO A LAVATORY DRAIN TAILPIECE, FLOOR DRAIN, ETC; DO NOT TERMINATE SECONDARY DRAIN PIPE THROUGH A SUSPENDED CEILING WHERE IT WILL DRIP INTO A SINK OR LAVATORY UNLESS APPROVED BY ENGINEER); OR B) A FLOAT SWITCH OR MOISTURE SENSING SWITCH, LOCATED IN SECONDARY DRAIN PAN, AND ELECTRICALLY INTERLOCKED WITH UNIT FAN TO TURN UNIT OFF WHEN MOISTURE IS SENSED.
   c. COMPLETELY WEATHERPROOF ALL EQUIPMENT, DUCTS, PIPES AND OTHER DEVICES AND MATERIALS INSTALLED OUTSIDE THE BUILDING, IN PARKING AREA, OR OTHERWISE EXPOSED TO WEATHER. AS A MINIMUM, WEATHERPROOFING SHALL INCLUDE, BUT IS NOT LIMITED TO THE FOLLOWING: JACKETING FOR ALL PIPING INSULATION, VALVES AND ACCESSORIES RATED FOR OUTDOOR SERVICE, ELECTRICAL ENCLOSURES NEMA 4X–SS. PROVIDE ELECTRICAL HEAT TRACING FOR UTILITIES SUSCEPTIBLE TO FREEZING.
   d. AFFIX ID TAGS TO ALL MECHANICAL EQUIPMENT PER SPECIFICATIONS.
4. EQUIPMENT INSULATION:
   a. INSULATE ALL SURFACES THAT ARE CAPABLE OF BECOMING COLD AND COLLECTING CONDENSATE. THIS INCLUDES SUPPLY DIFFUSERS AND CONNECTING DUCTWORK / TRANSITION PIECES.
5. PLUMBING:
   a. PROVIDE CODE RECOMMENDED CLEARANCE OR MINIMUM 10' BETWEEN EXHAUST FANS DISCHARGES, PLUMBING VENTS AND AIR INTAKES. COORDINATE LOCATIONS WITH PLUMBING CONTRACTOR.
   b. PROVIDE INSULATED AND TRAPPED COPPER CONDENSATE DRAIN LINES FROM ALL AIR CONDITIONING EQUIPMENT AND TERMINATE TO NEAREST FLOOR DRAIN OR OTHER APPROVED RECEPTACLES. COORDINATE DRAINS WITH PLUMBING.
6. ELECTRICAL:
   a. CONTRACTOR IS RESPONSIBLE FOR COORDINATION WITH ELECTRICAL CONTRACTOR REGARDING EQUIPMENT SIZES AND TYPES OF ELECTRICAL INTERFACE EQUIPMENT REQUIRED.
   b. DUE TO VARIATIONS IN EQUIPMENT CHARACTERISTICS BY DIFFERENT EQUIPMENT SUPPLIERS, MECHANICAL EQUIPMENT ULTIMATELY PROVIDED MAY DIFFER IN HORSEPOWER OR AMPERAGE REQUIREMENTS FROM THAT SPECIFIED IN THESE DRAWINGS. COORDINATE WITH GENERAL CONTRACTOR PRIOR TO BIDDING, AND PRIOR TO SUBMITTALS AND ORDERING EQUIPMENT, TO ENSURE THAT EQUIPMENT ELECTRICAL REQUIREMENTS ARE CONVEYED TO ELECTRICAL CONTRACTOR. IT IS SOLELY CONTRACTOR'S RESPONSIBILITY TO ENSURE COMPATIBILITY ISSUES ARE COORDINATED.

DUCTWORK:

1. DUCTWORK GENERAL:
   a. DRAWINGS ARE DIAGRAMMATIC IN NATURE. FOR CLARITY SAKE, MOST DUCT OFFSETS/RISES/DROPS ARE NOT SHOWN. WHERE DUCTS PENETRATE WALLS, INSTALL THEM PERPENDICULAR TO WALL.
   b. RECTANGULAR AND ROUND DUCTWORK SHALL BE GALVANIZED STEEL. SIZES SHOWN ARE INSIDE CLEAR DIMENSION, UNLESS NOTED OTHERWISE.
   c. VERIFY BOTTOM OF DUCT ELEVATION AND COORDINATE WITH OTHER TRADES.
   d. CONSTRUCT AND LEAKAGE TEST ALL DUCTWORK BASED ON SPECIFICATIONS AND SMACNA REQUIREMENTS, WHICHEVER IS MORE STRINGENT. COORDINATE PRESSURE CLASSES WITH EQUIPMENT SCHEDULES.
   e. FLEXIBLE DUCTS MAXIMUM LENGTH SHALL NOT EXCEED 6 FEET. USE OF FLEXIBLE DUCTWORK IS LIMITED TO AREAS WITH AN ACCESSIBLE SUSPENDED CEILING. PINCHED DUCT WILL HAVE TO BE REPLACED.
   f. IN AREAS WHERE DUCT CONFLICTS CANNOT BE AVOIDED, ROUTE SMALLER DUCTS THROUGH ROOF JOISTS.
   g. LOCATE AIR DEVICES AS SHOWN. COORDINATE WITH ELECTRICAL, IF NEEDED. RELOCATE DIFFUSER TO ADJACENT TILE.
2. DUCTWORK INSULATION:
   a. WRAP ALL OUTSIDE AIR, SUPPLY AND RETURN DUCTWORK UNLESS NOTED OTHERWISE.
   b. IN ADDITION, FOR ACOUSTICAL PERFORMANCE INTERNALLY LINE FIRST 10' OF SUPPLY AND LAST 10' OF RETURN DUCTWORK.
   c. PROVIDE ACOUSTICAL LINING FOR ALL TRANSFER DUCTS AND RETURN AIR ELBOWS.
   d. INSULATION ON DUCT SHOULD TO BE PROPERLY TAPED AND MASTICS MUST BE APPLIED ON SEAMS AND JOINTS AND AT ENDS ADJACENT TO DUCT FLANGES AND FITTINGS. FOR DUCT SIDES WITH DIMENSIONS LARGER THAN 18 INCHES, APPLY ADDITIONAL PINS AND CLIPS TO HOLD INSULATION TIGHTLY AGAINST SURFACE AT CROSS BRACING.
   e. INSULATE ALL EXHAUST DUCTWORK 10 FEET FROM EXTERIOR OPENING.
3. DUCT FITTINGS:
   a. WHERE RECTANGULAR TEE FITTINGS ARE SHOWN, PROVIDE FITTING WITH ADJUSTABLE DIVIDER SHEET AND TURNING VANES.
   b. WHERE RECTANGULAR MAIN AND BRANCH CONNECTIONS ARE SHOWN, PROVIDE EXTRACTOR VANES. NOT APPLICABLE TO DUCTWORK DOWNSTREAM OF VAV BOXES.
   c. PROVIDE TURNING VANES IN ALL ELBOWS PER SPECS.
4. DAMPERS:
   a. IN AN ACCESSIBLE LOCATION, PROVIDE MANUAL–TYPE VOLUME BALANCING DUCT DAMPERS IN ALL SUPPLY, RETURN AND EXHAUST DUCT BRANCHES TO INDIVIDUAL GRILLES, REGISTERS AND DIFFUSERS (GRD). TO MINIMIZE NOISE INSTALL DAMPERS CLOSER TO THE BRANCH CONNECTION THAN TO THE GRD. IN DUCTWORK, PROVIDE ACCESS DOORS TO ALL DAMPERS.
   b. ABOVE INACCESSIBLE CEILINGS AND IN CASE DUCT CONFIGURATION DOES NOT ALLOW FOR INSTALLATION OF DAMPER IN DUCTWORK, PROVIDE REMOTE MANUAL DAMPER BY YOUNG REGULATOR OR EQUAL, (CABLE OPERATED SYSTEM) WITH ENGINEER'S PERMISSION CONTRACTOR MAY PROVIDE VOLUME DAMPER THAT IS INTEGRAL TO GRD.
   c. PROVIDE BALANCING DAMPERS ON ALL EXHAUST GRILLES TO ACHIEVE DESIRED AIRFLOW.
   d. PROVIDE DYNAMIC FIRE DAMPERS (RUSKIN DIDB20, TYPE B OR EQUAL) IN ACCORDANCE WITH CODE REQUIREMENT, IN ALL PENETRATIONS OF FIRE RATED WALLS, OCCUPANCY SEPARATION WALLS, BARRIERS AND PARTITIONS, AND EXIT CORRIDORS. REFER TO ARCHITECTURAL PLANS FOR RATED WALLS. PROVIDE ACCESS DOORS AS PER CODE REQUIREMENTS, EQUAL TO RUSKIN ADH–22 FOR RECTANGULAR DUCT, ACUDOR RD FOR ROUND DUCT. WHERE GRILLE ACCESS IS INDICATED, ADDITIONAL DUCT ACCESS DOOR IS NOT REQUIRED. WHERE THE CEILING IS FIRE RATED PROVIDE FIRE RATED AIR DEVICES FOR TRANSFER & RETURN AIR GRILLES AND SUPPLY AIR DIFFUSERS AS PER CODE REQUIREMENTS. REFER TO ARCHITECTURAL PLANS FOR RATED CEILINGS.
   e. PROVIDE ACCESS DOORS (NOT SHOWN IN DRAWINGS) FOR INSPECTION OF DUCT MOUNTED EQUIPMENT SUCH AS FIRE/SMOKE DAMPERS, MANUAL BALANCING DAMPERS AND TURNING VANES. IN AREAS WITH HARD CEILING COORDINATE ACCESS DOOR LOCATIONS AND CEILING ACCESS PANELS WITH OTHER TRADES.

CONTROLS:

1. CONTRACTOR SHALL COOPERATE AND COORDINATE WORK ACTIVITIES WITH DDC CONTROLS CONTRACTOR TO ENSURE SMOOTH TROUBLE–FREE INSTALLATION.
2. WHERE NOT SPECIFICALLY INDICATED ON PLANS, DDC CONTRACTOR IS RESPONSIBLE FOR ALL CONTROL RELAYS AND CONTACTORS, POWER TO DDC PANELS, AND OTHER CONTROL ELEMENTS. ALTHOUGH DDC CONTRACTOR MAY COORDINATE WITH OTHER TRADES TO PROVIDE MISCELLANEOUS ELECTRICAL WORK, THE FINAL RESPONSIBILITY FOR ACHIEVEMENT OF CONTROL SEQUENCES LIES WITH DDC CONTRACTOR.
3. ON THE GRAPHIC PAGES FOR ALL EQUIPMENT AND/OR MONITORED DEVICES (SUCH AS SENSORS, METERS, DAMPERS, ETC.) GIVE A CLEAR, GRAPHICAL INDICATION AS TO WHETHER EQUIPMENT OR DEVICE HAS BEEN PLACED IN MANUAL OPERATION, OVERRIDING AUTOMATIC OPERATION. (FOR EXAMPLE, PLACE AN "M" NEXT TO EQUIPMENT HAS BEEN PLACED IN MANUAL OPERATION.)
4. REFER TO OPERATING SEQUENCE IN SPECIFICATIONS FOR ALARMS AND SEQUENCES REQUIRED.
5. PROVIDE FULL COLOR GRAPHICS OF NEW SYSTEMS.
6. INTERCONNECT NEW CONTROLS WITH OWNER'S EXISTING COS.
7. PROVIDE WEB–SERVER. SEE SPECIFICATIONS.
8. RECOMMENDED DIVISION OF RESPONSIBILITIES BETWEEN SUB–CONTRACTORS IS AS FOLLOWS:
   a. WITH OWNER COORDINATE ETHERNET CONNECTION FOR DDC SYSTEM.
   b. WITH ELECTRICAL SUB CONTRACTOR, CONTROL CONTRACTOR COORDINATES 120V POWER WIRING AND CONDUIT TO NEW CONTROLLERS (AND CIRCUIT BREAKERS, IF NO SPARES EXIST).
   c. CONTROLS CONTRACTOR SUPPLIES DAMPERS, CHW VALVES, ETC. TO MECHANICAL CONTRACTOR FOR INSTALLATION. COORDINATE OUTSIDE AND RETURN AIR DAMPERS WITH AHU MANUFACTURER.
   d. CONTROLS CONTRACTOR IS RESPONSIBLE FOR:
      * DAMPER ACTUATORS
      * CHW VALVES AND ACTUATORS
      * GATEWAY INTERFACES AND ALL RELATED ACCESSORIES FOR FULL COMMUNICATION BETWEEN EQUIPMENT AND DDC SYSTEM
      * ADJUSTABLE RANGE/FLAT PLATE THERMOSTATS, RH, CO2 SENSING DEVICES
      * EQUIPMENT CONTROLLERS, SOFTWARE, PROGRAMMING.
      * ALL NETWORK CONTROL PANELS, DDC CONTROLLERS, SOFTWARE, AND PROGRAMMING.
      * WIRING AND CONDUIT FOR CONTROL AND MONITORING DEVICES
      * CONTROL RELAYS
      * SHOP DRAWINGS PER SPECIFICATIONS
      * SYSTEM CHECK OUT, OWNER TRAINING, DDC SYSTEM WARRANTY WORK

INSULATION:

1. FIBERGLASS INSULATION MAY NOT BE USED ON ANY COLD PIPING SURFACES; ONLY CLOSED CELL INSULATION IS ACCEPTABLE.
2. PROVIDE INSULATION ON ALL SURFACES CAPABLE OF CREATING CONDENSATION.

ABBREVIATIONS

A	AMPS	ENT.	ENTERING	NO	NORMALLY OPEN
ACCU	AIR COOLED CONDENSING UNIT	EXT.	EXTERNAL OR EXTERIOR	NTS	NOT TO SCALE
ACT	ACTUATOR	FCU	FAN COIL UNIT	OA	OUTSIDE AIR
AFF	ABOVE FINISHED FLOOR	FD	FIRE DAMPER	PH	PHASE
AHU	AIR HANDLING UNIT	FM	FLOW METER	RA	RETURN AIR
B.	BOTTOM	FS	FLOW SWITCH	RAG/RG	RETURN AIR GRILLE
BAS	BUILDING AUTOMATION SYSTEM	FPI	FINS PER INCH	RD	ROOF DRAIN
BOP	BOTTOM OF PIPE	G.	GROUND	RM.	ROOM
BOTT.	BOTTOM	GA.	GAGE	RPZ	REDUCED PRESSURE ZONE
C.	CONDUIT OR COMMON	GALV.	GALVANIZED	SA	SUPPLY AIR
CHR	CHILLED WATER RETURN	GPM	GALLONS PER MINUTE	SD	SUPPLY AIR DIFFUSER
CHS	CHILLED WATER SUPPLY	GRND.	GROUND	SS	STAINLESS STEEL
CHW	CHILLED WATER	HB	HOSE BIBB	SZ	SINGLE ZONE
CHWP	CHILLED WATER PUMP	HP	HORSEPOWER	TAB	TESTING & BALANCING
CR	CONDENSER WATER RETURN	HS	HUMIDITY SENSOR	T.O.L.	TOP OF LOUVER
CS	CONDENSER WATER SUPPLY	HVAC	HEATING, VENTILATION, & AIR CONDITIONING	TS	TEMPERATURE SENSOR
CLG.	CEILING OR COOLING			TSTAT	THERMOSTAT
COMB.	COMBINATION	LVG.	LEAVING	UG	UNDERGROUND
CONC.	CONCRETE	MECH	MECHANICAL	UNO	UNLESS OTHERWISE NOTED
COND.	CONDUIT	MOT. STRTR.	MOTOR STARTER	V	VOLTS
CT	COOLING TOWER	MS	MOTOR STARTER	VAV	VARIABLE AIR VOLUME
CU.	COPPER	MZ	MULTI–ZONE	VFD	VARIABLE FREQUENCY DRIVE
CW	CITY WATER	NC	NORMALLY CLOSED	W	WIRE
DDC	DIRECT DIGITAL CONTROLS				
DMPR.	DAMPER				
DISC.	DISCONNECT				
EAG/EG	EXHAUST AIR GRILLE				
EMS	ENERGY MANAGEMENT SYSTEM				

MECHANICAL SYMBOLS LEGEND

12x12	DUCT SIZE: FIRST FIGURE IS SIDE SHOWN	T	THERMOSTAT
(12x12)	BELOW DUCT SIZE: FIRST FIGURE IS SIDE SHOWN	RH	SPACE HUMIDITY SENSOR
	DIRECTION OF FLOW–RETURN	RH	DUCT HUMIDITY SENSOR
	DIRECTION OF FLOW–SUPPLY	C	SPACE CARBON DIOXIDE SENSOR
		SP	STATIC PRESSURE SENSOR
FD	FIRE DAMPER	C	DUCT CARBON DIOXIDE SENSOR
8"Ø	FLEXIBLE DUCT	CHR	CHILLED WATER RETURN
EG-X / cfm	EXHAUST AIR GRILLE	CHS	CHILLED WATER SUPPLY
		CD	CONDENSATE PIPING
RG/TG-X / cfm	RETURN AIR/TRANSFER AIR GRILLE		BUTTERFLY VALVE
SD-X / cfm	SUPPLY AIR DIFFUSER		MANUAL VALVE
	SIDE TAP WITH DAMPER		AUTOMATIC VALVE
	BACKDRAFT DAMPER		CHECK VALVE
AFR	AUTO–FLOW REGULATOR		PRESSURE GAUGE & COCK
	DRAIN VALVE	TS	TEMPERATURE SENSOR
	BALL VALVE	TW	THERMOMETER WELL

ethos engineering
119 W. VAN BUREN AVE. STE.101
HARLINGEN, TX
PHONE: 956-230-3435
TEXAS REGISTERED
ENGINEERING FIRM
F-15998

No.	REVISIONS	BY

GMS ARCHITECTS
1150 paredes line rd.
brownsville
texas 78526
(956) 546-0110
fax (956) 546-0196

SAN BENITO CISD
ADDITIONS AND RENOVATIONS AT SAN BENITO HS AND SULLIVAN ELEMENTARY
SAN BENITO TEXAS

BID PACKAGE "A"
SAN BENITO HIGH SCHOOL

STATE OF TEXAS
CESAR A. GONZALEZ
108611
LICENSED
8.2.2019

COPYRIGHT 2019
GOMEZ MENDEZ SAENZ INC.
ARCHITECTS-PLANNERS

DATE	AUGUST 2, 2019
SCALE	As Shown
DRAWN	ETHOS
JOB	19V32
SHEET	AM1.01

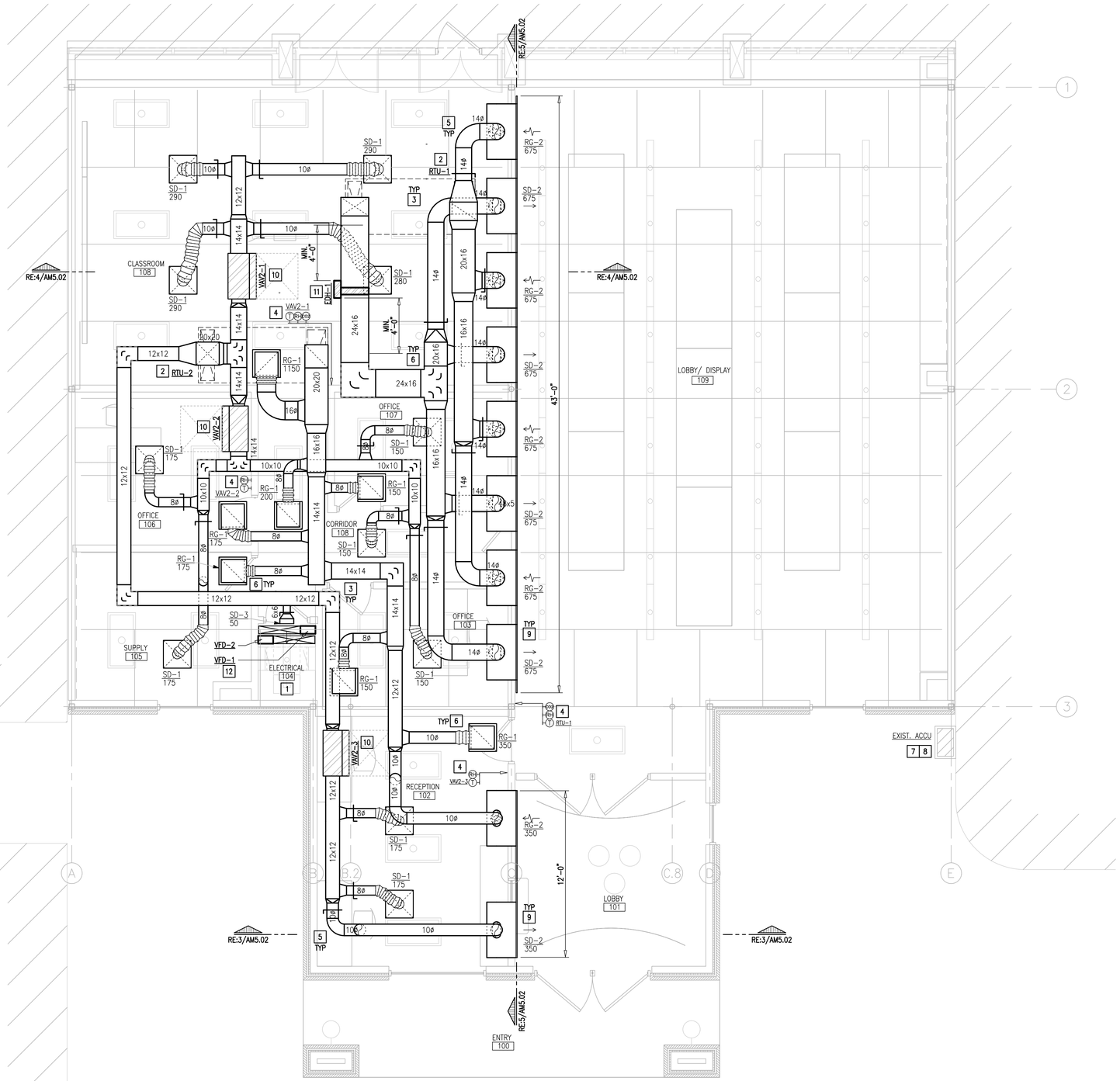

01 SAN BENITO HS MECHANICAL PLAN

SCALE: 1/4" = 1'-0"

NORTH

GENERAL NOTES:

1. PRIOR TO LABELING EQUIPMENT, COORDINATE DESIGNATION AND IDENTIFICATION WITH OWNER AND BUILDING AUTOMATION SYSTEM.

MECHANICAL PLAN KEYED NOTES:

1. CODE AND WORKING CLEARANCE FOR ELECTRICAL PANELS. DO NOT ROUTE DUCT OR PIPING DIRECTLY ABOVE ELECTRICAL EQUIPMENT FOOTPRINT. SEE ELECTRICAL PLANS FOR EXACT LOCATION. (TYPICAL)
2. PROVIDE RTU ON ROOF CURB AS SCHEDULED. REFER TO MECHANICAL ROOF PLAN FOR MORE INFORMATION.
3. DUCTWORK ROUTING SHOWN IS DIAGRAMMATIC IN NATURE. FIELD-VERIFY STRUCTURE AND SPACE AVAILABILITY PRIOR TO SUBMITTING SHOP DRAWINGS. COORDINATE WITH ARCHITECT AND ENGINEER IN CASE OF CONFLICTS. (TYPICAL)
4. PROVIDE TEMPERATURE, RH, AND CO2 SENSORS WHERE INDICATED. INSTALL 48" A.F.F. COORDINATE WITH ARCHITECT AND OWNER TO MEET ADA REQUIREMENTS. PROVIDE CLEAR LOCKING COVER FOR ALL SENSORS. (TYPICAL)
5. PROVIDE ROUND SPIRAL LOCK-SEAM DUCT. LONGITUDINAL SEAM TYPE IS NOT ACCEPTABLE. (TYPICAL)
6. PROVIDE FABRICATED RETURN AIR PLENUM BOX ABOVE RETURN GRILLE. INSTALL ACOUSTICAL LINING IN PLENUM BOX. CONNECT WITH FLEX DUCT TO MAIN RETURN TRUNK DUCT WHERE SHOWN ON DRAWING AND INSTALL BALANCING DAMPER WHERE INDICATED. FOR AREAS WHERE FLEX DUCT IS NOT SHOWN, PROVIDE ACOUSTICAL LINING FOR CONNECTION TO MAIN RETURN TRUNK DUCT. SEE DETAIL SHEET. (TYPICAL)
7. RETAIN AND REUSE EXISTING WALL MOUNTED AIR COOLED CONDENSING UNIT (ACCU).
8. PROTECT EXISTING AIR COOLED CONDENSING UNIT FROM DAMAGE DURING CONSTRUCTION OF NEW BUILDING ADDITION.
9. PROVIDE LINEAR DIFFUSER AS SCHEDULED. DIFFUSERS SHALL HAVE CONTINUOUS LOOK WITH LENGTH AS SHOWN FOR AESTHETICS PURPOSES. PROVIDE PLENUM BOX TITUS 4' (MP) BEHIND ACTIVE SECTION OF AIR DEVICE. PROVIDE A PAINTED SHEET COVER BEHIND THE INACTIVE SECTION OF THE AIR DEVICE TO AVOID SEEING THROUGH THE AIR DEVICE SLOTS. COORDINATE COLOR WITH ARCHITECT.
10. PROVIDE VAV TERMINAL UNITS AS SCHEDULED, PROVIDE DUCT TRANSITION AS NEEDED. MAINTAIN MINIMUM 4'-0" STRAIGHT DUCT SECTION UPSTREAM OF BOX AND MINIMUM 3'-0" CLEARANCE IN FRONT OF THE ACCESS PANEL. SUPPORT WITH GALVANIZED ALL-THREAD AS SHOWN IN DETAIL.
11. PROVIDE ELECTRIC DUCT HEATER AS SCHEDULED. MAINTAIN MINIMUM 4'-0" STRAIGHT DUCT SECTION UPSTREAM AND DOWNSTREAM OF DUCT HEATER AND MINIMUM 3'-0" CLEARANCE IN FRONT OF THE ACCESS PANEL.
12. PROVIDE VFD PER SCHEDULE WITH NEMA-1 ENCLOSURE FOR MOUNTING INDOORS. MAINTAIN MINIMUM 3'-0" CLEARANCE IN FRONT OF VFD. (TYPICAL)

No.	REVISIONS	BY

GMS ARCHITECTS
1150 paredes line rd.
brownsville
texas 78526
(956) 546-0110
fax (956) 546-0196

SAN BENITO CISD ADDITIONS AND RENOVATIONS AT SAN BENITO HS AND SULLIVAN ELEMENTARY

SAN BENITO TEXAS

BID PACKAGE "A" SAN BENITO HIGH SCHOOL

STATE OF TEXAS
CESAR A. GONZALEZ
108611
LICENSED PROFESSIONAL ENGINEER
8.2.2019

KEYPLAN

ethos engineering
119 W. VAN BUREN AVE. STE.101
HARLINGEN, TX
PHONE: 956-230-3435
TEXAS REGISTERED
ENGINEERING FIRM
F-15998

COPYRIGHT 2019
GOMEZ MENDEZ SAENZ INC.
ARCHITECTS-PLANNERS

DATE	AUGUST 2, 2019
SCALE	As Shown
DRAWN	ETHOS
JOB	19V32
SHEET	AM2.01

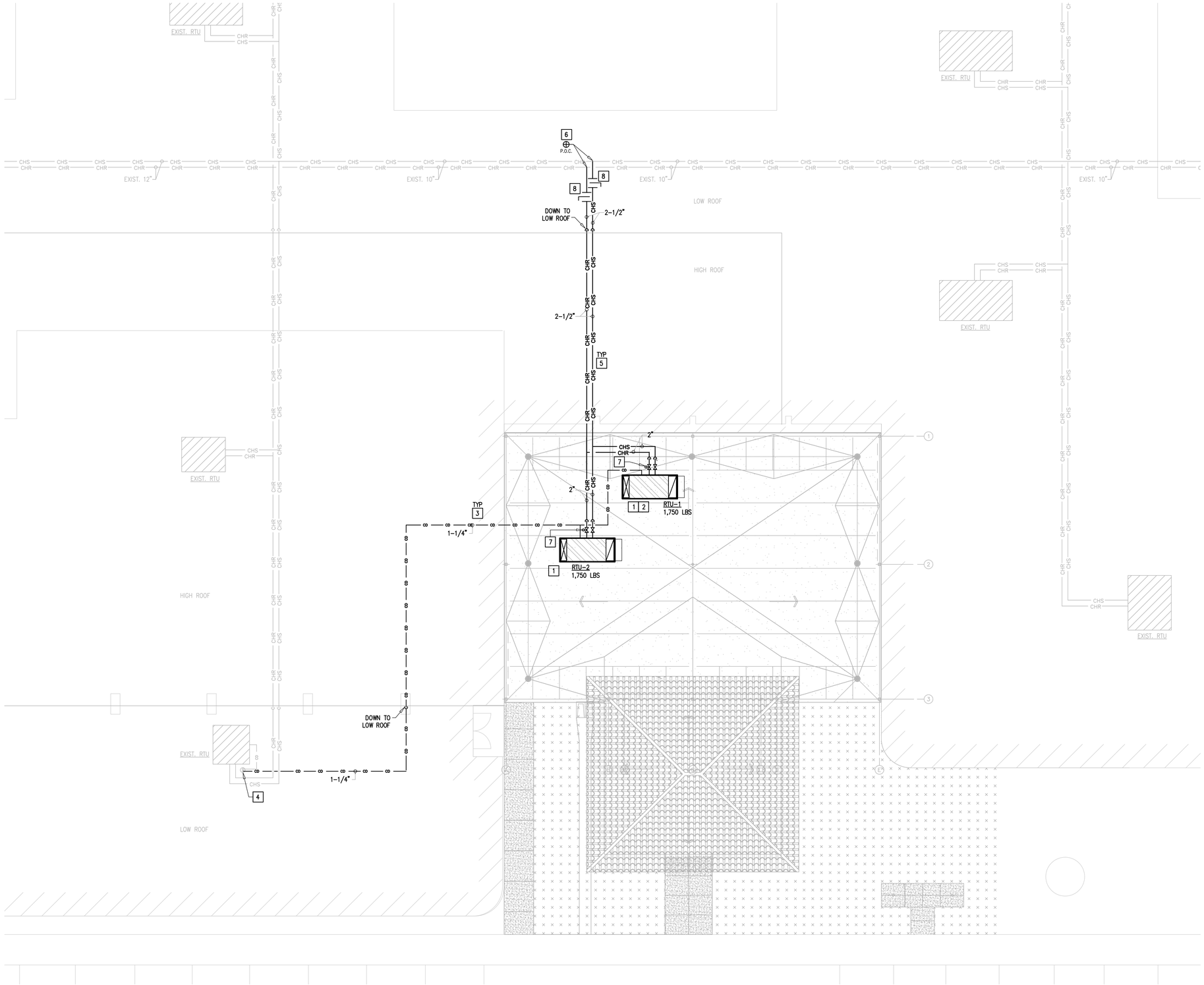

01 SAN BENITO HS MECHANICAL ROOF PLAN

SCALE: 1/8" = 1'- 0"

NORTH

GENERAL NOTES:

1. PRIOR TO LABELING EQUIPMENT, COORDINATE DESIGNATION AND IDENTIFICATION WITH OWNER AND BUILDING AUTOMATION SYSTEM.
2. CONTRACTOR SHALL FLUSH, CLEAN AND DRAIN ALL THE NEW CHW PIPING PRIOR CIRCULATING CHILLED WATER AND PRIOR CONNECTING TO EXISTING CHW LOOP. PROVIDE TEMPORARY CONNECTIONS, BYPASSES, FITTINGS, PUMPS, ETC. ON NEW CHW PIPING AS NECESSARY TO ACCOMPLISH THESE ACTIVITIES. COORDINATE WITH WATER TREATMENT CONTRACTOR. DO NOT CONNECT NEW CHW PIPING TO EXISTING CHW LOOP WITHOUT PERFORMING THESE ACTIVITIES AND WITHOUT OBTAINING PRIOR APPROVAL FROM OWNER AND A/E TEAM. FAILURE TO DO SO, CONTRACTOR WILL BE RESPONSIBLE FOR ALL DAMAGES CAUSED TO THE NEW AND EXISTING CHW SYSTEM. OWNER WILL CONFIRM WHEN EXISTING CHW LOOP IS READY TO ACCEPT A NEW CHW CONNECTION.
3. ALL PIPING WELDS MUST BE WIRE-BRUSHED AND PAINTED A MINIMUM OF 12" ON EITHER SIDE OF WELD PRIOR TO INSULATION.
4. CLEAN AND PREPARE SURFACE OF CHILLED WATER PIPING BEFORE INSULATING. APPLY CORROSION COATING TO ALL PIPING. REFER TO SPECIFICATIONS FOR MORE INFORMATION.
5. INSULATE PER SPECIFICATIONS ALL PIPING, VALVES, FITTINGS, BODIES AND COLD SURFACES THAT ARE CAPABLE OF GENERATING CONDENSATION. FIBERGLASS INSULATION WILL NOT BE ALLOWED.
6. PRIOR TO INSTALLATION OF EQUIPMENT, VERIFY THAT MANUFACTURER RECOMMENDED AND CODE REQUIRED CLEARANCES ARE AVAILABLE.
7. PROVIDE P/T TEST PORT WITHIN 6 INCHES OF EVERY PRESSURE GAGE AND THERMOWELL. SEE PIPING SCHEMATIC FOR LOCATIONS.
9. REFER TO SPECIFICATIONS FOR CONTROL COMPONENTS, DEVICES, AND SENSORS TO BE COORDINATED WITH MECHANICAL WORK.
10. PROVIDE APPROPRIATE IDENTIFICATION AND ALUMINUM METAL JACKETING FOR EXTERIOR PIPING. SEE SPECIFICATIONS.
11. ELECTRICAL AND CONTROLS CONDUIT CONNECTIONS AT THE RTUS: SEAL THE ANNULUS OF THE CONDUIT WITH FIRE-PROOF, AIR AND WATER TIGHT SEALANT TO PREVENT AIR AND CONDENSATE FLOW INTO OR OUT OF THE RTU.
12. OPTIMIZE ROUTING OF CHILLED WATER PIPING AND COIL CONNECTIONS TO PREVENT BLOCKAGE OF RTU'S ACCESS DOORS. ACCESS DOORS SHALL HAVE A CLEAR SWING FOR SERVICE FOR ALL FITTINGS, VALVES, AND ACCESSORIES.
13. CONTRACTOR SHALL CONTACT NALCO FOR CHEMICAL WATER TREATMENT REQUIRED ON CHW SYSTEM. REFER TO SPECIFICATIONS FOR MORE INFORMATION.

MECHANICAL ROOF PLAN KEYED NOTES:

1. PROVIDE RTU AS SCHEDULED. ORIENT RTUS TO OPTIMIZE DUCTWORK. SEAL ALL OPENINGS AND ENSURE THAT INSTALLATION IS WEATHER-TIGHT. PROVIDE COPPER CONDENSATE DRAIN LINES WITH P-TRAPS, AND EXTEND TO CONDENSATE DRAIN RECEPTOR AS SHOWN. SUPPORT PIPING IN PIPING SUPPORTS AS DETAILED. PROVIDE ROOF CURB TO INSTALL EQUIPMENT ON ROOF. SECURE EQUIPMENT TO ROOF CURB AND ROOF CURB TO ROOF STRUCTURE AS PER DIV. 7 SPECIFICATIONS. ATTACHMENTS SHALL BE CAPABLE OF WITHSTANDING THE LOCAL WIND PRESSURES.
2. PROVIDE FACTORY INSTALLED CONVENIENCE ELECTRICAL OUTLET AT INDICATED RTUS. COORDINATE WITH EQUIPMENT MANUFACTURER. COORDINATE WITH ELECTRICAL CONTRACTOR.
3. PROVIDE COPPER CONDENSATE PIPING ON ROOF AND PROVIDE SUPPORTS AS PER DETAIL. REFER TO DETAIL SHEET. (TYPICAL)
4. TERMINATE NEW 1-1/4" CONDENSATE PIPING AT EXISTING CONDENSATE ROOF RECEPTOR.
5. PROVIDE CHILLED WATER PIPING ON ROOF AS PER SPECIFICATIONS AND PROVIDE SUPPORTS AS PER DETAIL. REFER TO DETAIL SHEET. (TYPICAL)
6. CONNECT NEW 2-1/2" CHILLED WATER PIPING INTO EXISTING 10" CHILLED WATER PIPING ON ROOF.
7. PROVIDE CHW CONTROL VALVE AND RELATED ACTUATOR OUTSIDE RTU CABINET. ACTUATOR SHALL BE NEMA 4X RATED. COORDINATE WITH CONTROLS CONTRACTOR.
8. PROVIDE ISOLATION VALVES.

KEYPLAN

ethos engineering
119 W. VAN BUREN AVE. STE.101
HARLINGEN, TX
PHONE: 956-230-3435
TEXAS REGISTERED
ENGINEERING FIRM
F-15998

No.	REVISIONS	BY

GMS ARCHITECTS
1150 paredes line rd.
brownsville
texas 78526
(956) 546-0110
fax (956) 546-0196

SAN BENITO CISD
ADDITIONS AND RENOVATIONS AT SAN BENITO HS AND SULLIVAN ELEMENTARY
SAN BENITO TEXAS

BID PACKAGE "A"
SAN BENITO HIGH SCHOOL

STATE OF TEXAS
CESAR A. GONZALEZ
108611
REGISTERED ARCHITECT
8.2.2019

COPYRIGHT 2019
GOMEZ MENDEZ SAENZ INC.
ARCHITECTS-PLANNERS

DATE	AUGUST 2, 2019
SCALE	As Shown
DRAWN	ETHOS
JOB	19V32
SHEET	AM3.01

HYDRONIC ROOF TOP UNIT SCHEDULE

MARK	UNIT TYPE	TOTAL CFM	OUTSIDE AIR CFM	ESP IN WG	MIN MOTOR HP	ELECT. V/P/H	HYDRONIC COOLING COIL SECTION TOTAL BTU/H	SENS. BTU/H	EAT DB/WB (F)	LAT DB/WB (F)	EWT/LWT (F)	CHW GPM	WPD (FT)	# ROWS (8 MAX.)	FPI (10 MAX.)	ELECTRIC HEATING	WEIGHT (LBS.)	NOTES	DAIKIN MODEL NUMBER
RTU-1	HYDRONIC	2700	500	1.50	3	480/3/60	134,413	69,984	77.41/68.06	52.1/51.9	44/58	19.2	4.9	8.0	10.0	(DUCT MOUNTED HEATER)	1,500	ALL	OAH007
RTU-2	HYDRONIC	2700	500	1.50	3	480/3/60	134,413	69,984	77.41/68.06	52.1/51.9	44/58	19.2	4.9	8.0	10.0	(HEATERS AT VAV BOXES)	1,500	ALL	OAH007

NOTES:
1. MANUFACTURER AND MODEL NUMBER LISTED ARE "OR APPROVED EQUAL". SEE SPECIFICATIONS FOR APPROVED MANUFACTURERS AND SUBSTITUTION PROCEDURES.
2. FOR RTU CONFIGURATION, REFER TO RTU PLANS AND ELEVATIONS.
3. ESP IS STRICTLY EXTERNAL STATIC PRESSURE, AND DOES NOT INCLUDE FILTER, COIL, CABINET LOSSES.
4. PROVIDE FILTER MIXING BOX SECTION, COIL(S) SECTION, AND FAN SECTION WITH DOORS ACCESS SIDE FOR EACH.
5. PROVIDE GALVANIZED ANGLED FILTER RACKS WITH GALVANIZED FRAMES FOR FILTER MEDIA. SEE SPECIFICATIONS
6. PROVIDE HINGED ACCESS DOOR IN THE OPPOSITE SIDE OF COIL CONNECTION HOUSING TO ACCESS THE CHW COIL.
7. PROVIDE OUTSIDE AIR HOOD, OUTSIDE AND RETURN AIR DAMPERS. CONTROLS CONTRACTOR TO PROVIDE ACTUATORS.
8. PROVIDE DOUBLE WALL GALVANIZED STEEL CABINETRY (EXTERIOR WALL PAINTED) WITH R-13 FOAM INSULATION OVER ENTIRE CABINET.
9. PROVIDE STAINLESS STEEL DRAIN PAN, STAINLESS STEEL COIL CASING AND STAINLESS STEEL COIL LINER.
10. PROVIDE FANS WITH 2" SPRING ISOLATORS. PROVIDE DIRECT DRIVE PLENUM FAN WITH BOTTOM OPENING. RTU BOTTOM DISCHARGE VELOCITIES SHALL NOT EXCEED 1500 FPM.
11. RTU-1 ONLY: PROVIDE FACTORY MOUNTED CONVENIENCE OUTLET. ELECTRICAL OUTLETS SHALL BE WEATHER PROOF GFCI RECEPTACLE WITH WEATHER PROOF WHILE-IN-USE COVER. FIELD WIRED AND FUSE PROTECTED BY ELECTRICAL CONTRACTOR.
12. ALL MOTORS SHALL BE NON-OVERLOADING TYPE, VFD DUTY RATED, PREMIUM EFFICIENCY MOTORS.
13. PROVIDE SINGLE POINT OF ELECTRICAL POWER CONNECTION. SAFETY DISCONNECT BY DIV. 26. COORDINATE WITH ELECTRICAL CONTRACTOR.
14. PROVIDE IBC 2012 COMPLIANT CURB AND ATTACHMENTS FROM UNIT TO CURB AND CURB TO STRUCTURE. EQUIPMENT OR CURB MANUFACTURER IS RESPONSIBLE FOR PROVIDING ENGINEERED DETAIL ANALYSIS OF:
    1) ATTACHMENT OF EQUIPMENT TO CURB.
    2) CURB TO STRUCTURE.
    3) CURB AND ATTACHMENT HARDWARE STRENGTH.
    REFER TO ARCHITECTURAL AND STRUCTURAL DRAWINGS FOR ROOF SUBSTRATE DETAILS.
    EQUIPMENT OR CURB MANUFACTURER IS ALSO RESPONSIBLE FOR PROVIDING ENGINEERED INSTALLATION DRAWINGS FOR ITEMS 1 AND 2 LISTED ABOVE.
    BOTH, THE ENGINEERED ANALYSIS AND THE ENGINEERED INSTALLATION DRAWINGS SHALL BE PERFORMED SPECIFICALLY FOR THIS BUILDING AND PROJECT SITE AND STAMPED AND SEALED BY A TEXAS LICENSED ENGINEER.
    SUBMITTALS WILL NOT BE APPROVED UNTIL ALL DOCUMENTATION LISTED ABOVE IS PROVIDED ACCURATELY.

VAV BOX SCHEDULE

MARK	SERVING BUILDING	CFM	MIN. ELEC. HEAT KW	ELECTRICAL V/P/H	ELECTRIC HEAT STEPS	UNIT PD (IN WG)	MIN. COOLING FLOW (%)	MANUF. MODEL SERIES	MODEL SIZE	NOTES
RTU-2										
VAV2-1	SEE PLAN	1150	6.0	460-277/3/60	2	0.180	30%	TITUS DESV 3 3 2	12	ALL
VAV2-2	SEE PLAN	800	4.0	460-277/3/60	1	0.160	30%	TITUS DESV 3 3 2	10	ALL
VAV2-3	SEE PLAN	750	4.0	460-277/3/60	1	0.160	30%	TITUS DESV 3 3 2	10	ALL

NOTES:
1. COORDINATE WITH DRAWINGS FOR RIGHT OR LEFT-HAND CASING CONFIGURATION PRIOR TO ORDERING.
2. PROVIDE VAV TERMINAL UNIT WITH 24V TRANSFORMER AND FUSIBLE INTEGRAL DISCONNECT.
3. COORDINATE INLET AND OUTLET DIMENSIONS WITH PLANS. PROVIDE "RECTANGULAR TO ROUND" TRANSITIONS FOR INLET CONNECTIONS AS SHOWN ON DRAWINGS.
4. FURNISH VAV BOXES LESS THAN 24" DEEP.
5. FURNISH WITH SLIP AND DRIVE CONNECTIONS.
6. PROVIDE SOUND ATTENUATOR INTEGRAL TO ELECTRIC HEATING COIL SECTION.
7. MINIMUM AIR FLOW SHALL BE 50% DURING HEATING MODE.
8. PROVIDE TITUS 1" ECO SHIELD WITH FOIL FACING OR EQUAL.
9. PROVIDE AEROCROSS INLET AIR VELOCITY SENSOR OR EQUAL.
10. THE TITUS 480V, 3-PHASE ELECTRIC HEAT CONFIGURATION IS 4-WIRE WYE. DIV 26 TO PROVIDE ELECTRICAL SERVICE FOR THIS CONFIGURATION.

ELECTRIC DUCT HEATER SCHEDULE

MARK	UNIT TYPE	DUCT SIZE (INCHES)	CFM	SERVES	KW	STG.	ELECT. V/PH/HZ	NOTES	MANUFACTURER MODEL NUMBER
EDH-1	DUCT MOUNTED	24 X 16	2,700	RTU-1	22.5	SCR	480/3/60	ALL	WARREN CBK

NOTES:
1. MANUFACTURER AND MODEL NUMBER LISTED ARE "OR APPROVED EQUAL".
2. PROVIDE AIR PRESSURE SWITCH, MAGNETIC CONTACTORS, HI LIMIT CONTROL, PRIMARY AND SECONDARY OVER CURRENT PROTECTION (FUSES), DOOR INTERLOCKED DISCONNECT SWITCH.
3. DIV. 26 TO PROVIDE SAFETY DISCONNECT (SEPARATED FROM AHU FAN).

AIR DEVICE & DIFFUSER SCHEDULE

SUPPLY AIR DIFFUSER (SD-1)

TITUS OMNI-AA NC < 20			DESCRIPTION: ALUMINUM SQUARE CEILING DIFFUSER, BORDER TYPE 3, COLOR WHITE WITH ROUND NECK AND FULL FACE		
CLG. MODULE SIZE INCHES	FACE SIZE INCHES	ROUND NECK SIZE	FLEX DUCT SIZE	DIFFUSER DIFFUSION PATTERN & CFM	NOTES
24 X 24	24 X 24	TO MATCH NC CRITERIA	SEE PLAN	SD1-CFM	1-5

SUPPLY AIR DIFFUSER (SD-2 & RG-2)

TITUS FL-25-JT NC < 17			DESCRIPTION: HIGH PERFORMANCE, LINEAR SLOT DIFFUSER. SEE PLAN FOR LENGTH.		
CFM RANGE	# SLOTS	SIZE OF SLOTS INCHES	(ACTIVE SECTION) PLENUM LENGTH INCHES	DIFFUSER DIFFUSION PATTERN & CFM	NOTES
0 - 725	1	2.5"	48" LONG (BACK CONNECTION)	SD-2	1, 4, 5, 6
0 - 725	1	2.5"	48" LONG (BACK CONNECTION)	RG-2	1, 4, 5, 6, 7

RETURN AND TRANSFER AIR GRILLE (RG-1 & TG-1)

TITUS 50F NC < 20			DESCRIPTION: ALUMINUM GRID EGGCRATE RETURN GRILLE WITH BORDER TYPE 3 (LAY-IN).	
CFM RANGE	CLG. MODULE SIZE INCHES	NOMINAL DUCT SIZE INCHES (INLET)	DIFFUSER DIFFUSION PATTERN & CFM	NOTES
0 - 1600	24 X 24	18 X 18	RG1-CFM (RETURN AIR GRILLES ONLY)	1,4,5
0 - 1600	24 X 24	18 X 18	TG1-CFM (TRANSFER AIR GRILLES ONLY)	1,4,5

NOTES:
1. PROVIDE MANUFACTURER'S STANDARD BAKED WHITE ENAMEL FINISH.
2. PROVIDE FULL SIZE BACK PAN WITH DUCT ADAPTER.
3. INSULATE BACK PAN ON ALL SUPPLY AIR DIFFUSERS AND GRILLES.
4. PROVIDE MOUNTING FRAME TYPE COMPATIBLE WITH SCHEDULED CEILING OR WALL (SURFACE OR LAY-IN).
5. AIR DEVICES SHALL MATCH ARCHITECTURAL FINISH. COORDINATE COLOR WITH ARCHITECT.
6. PROVIDE BORDER TYPE 11 HIDDEN FLANGE.
7. RETURN AND SUPPLY AIRFLOW ON SHARED LINEAR AIR DEVICE. SINGLE LINEAR AIR DEVICE SHALL HAVE SEPARATE ACTIVE SECTIONS OF SUPPLY AND RETURN AIRFLOW. PROVIDE ALL NECESSARY ACCESSORIES FOR A COMPLETE SYSTEM.

VFD SCHEDULE

MARK	EQUIPMENT SERVED	MOTOR HP	FL AMPS	ELECTRICAL V/P/Hz	MANUFACTURER & MODEL NUMBER	NOTES
VFD-1	RTU-1	3	4.8	480/3/60	YASKAWA Z1000	ALL
VFD-2	RTU-2	3	4.8	480/3/60	YASKAWA Z1000	ALL

NOTES:
1. PROVIDE NEMA 1 ENCLOSURE FOR VFD LOCATED INDOORS.
2. PROVIDE INTEGRAL DISCONNECT.
3. PROVIDE BYPASS.
4. ONLY YASKAWA AND SCHNEIDER S-FLEX ARE ACCEPTABLE VFDS MANUFACTURERS FOR THIS PROJECT.

ethos engineering
119 W. VAN BUREN AVE. STE.101
HARLINGEN, TX
PHONE: 956-230-3435
TEXAS REGISTERED
ENGINEERING FIRM
F-15998

No.	REVISIONS	BY

GMS ARCHITECTS
1150 paredes line rd.
brownsville
texas 78526
(956) 546-0110
fax (956) 546-0196

SAN BENITO CISD
ADDITIONS AND RENOVATIONS AT SAN BENITO HS AND SULLIVAN ELEMENTARY
SAN BENITO TEXAS

BID PACKAGE "A"
SAN BENITO HIGH SCHOOL

STATE OF TEXAS
CESAR A. GONZALEZ
108611
LICENSED
8.2.2019

COPYRIGHT 2019
GOMEZ MENDEZ SAENZ INC.
ARCHITECTS-PLANNERS

DATE AUGUST 2, 2019
SCALE As Shown
DRAWN ETHOS
JOB 19V32
SHEET AM4.01

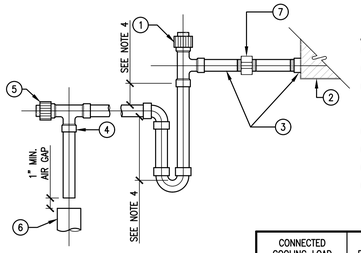

KEYED NOTES

1. CLEAN OUT.
2. DRAIN PAN.
3. DRAIN LINE SHALL BE AT LEAST OF THE SAME SIZE AS THE DRAIN PAN CONNECTION.
4. PITCH.
5. CLEAN OUT.
6. OPEN DRAIN.
7. PROVIDE THREADED UNION CONNECTION FOR ACCESS.

NOTES:

1. MANUALLY PRIME TRAP BEFORE START UP.
2. SUPPORT DRAIN LINES TO PREVENT SAG.
3. ALLOW SUFFICIENT SPACE BELOW PAN FOR TRAP AND PITCH TO DRAIN.
4. COORDINATE WITH MANUFACTURER OF AHU.

CONNECTED COOLING LOAD	MIN. * PIPE SIZE
UP TO 2 TON	3/4"
2-5	1"
5-30	1-1/4"
30-50	1-1/2"
50-160	2"
160-300	3"
300-430	4"

* NOT SMALLER THAN OUTLET SIZE.

RTU
01 CONDENSATE DRAIN DETAIL
SCALE: NOT TO SCALE

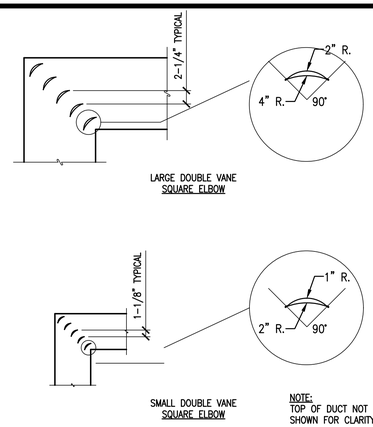

02 TYPICAL VANED DUCT ELBOWS DETAIL
SCALE: NOT TO SCALE

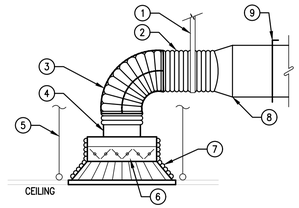

KEYED NOTES

1. STRAP HANGER.
2. FLEX SUPPLY DUCT, TYP.
3. DUCT COLLAR (TO RETAIN ELBOW SHAPE).
4. ROUND NECK ADAPTOR.
5. HANGER. TYP.
6. OPPOSED BLADE DAMPER (ALTERNATIVE), TYP.
7. INSULATION, TYP.
8. RECT. TO ROUND TRANSITION, TYP.
9. VOLUME DAMPER AT TAKE-OFF (PREFERED LOCATION), TYP.

03 CEILING DIFFUSER SUPPORT DETAIL
SCALE: NOT TO SCALE

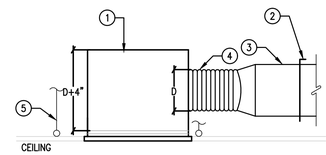

KEYED NOTES

1. SHEET METAL (PAINTED WHERE EXPOSED) PLENUM BOX. PROVIDE SOFFICIENT SUPPORT PER SMACNA REQUIREMENTS TO PLACE NO LOAD ON CEILING GRID.
2. VOLUME DAMPER AT TAKE-OFF (PREFERED LOCATION), TYP.
3. DUCT AS SHOWN ON PLANS TYP.
4. FLEX.
5. HANGER, TYP.

04 CEILNG RETURN GRILLE DETAIL
SCALE: NOT TO SCALE

NOTES:

1. FIT ALL CONNECTIONS TO AVOID VISIBLE OPENINGS & SECURE SUITABLY FOR THE PRESSURE CLASS.
2. ADDITIONAL MECHANICAL FASTENERS REQ'D. FOR 4" W.G. & OVER.
3. DO NOT EXPOSE LINER EDGES ON LINED DUCT CONNECTIONS.
4. ALL OPENINGS TO BE CUT ACCURATELY IN SHAPE & SIZE.

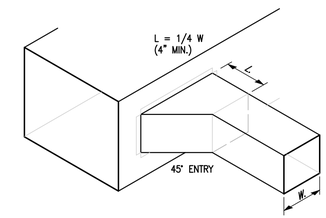

05 BRANCH CONNECTION DETAILS
SCALE: NOT TO SCALE

NOTE:
TOP OF DUCT NOT SHOWN FOR CLARITY

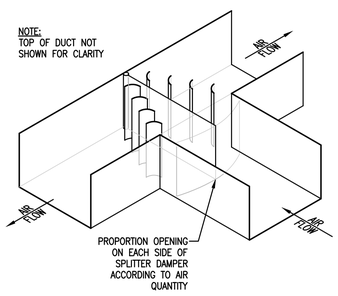

06 TYPICAL SPLITTER DAMPER DETAIL
SCALE: NOT TO SCALE

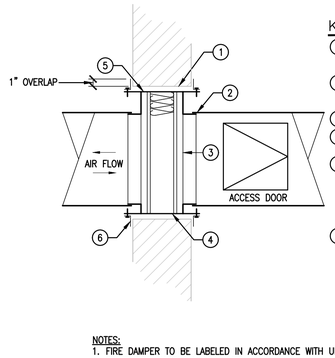

KEYED NOTES

1. PROVIDE 1/4" CLEARANCE ON SIDES AND TOP FOR DAMPER EXPANSION.
2. BREAKAWAY, SLIP TYPE DUCT CONNECTION (TYP. FOR BOTH SIDES).
3. FIRE DAMPER
4. FASTEN DAMPER FRAME TO SLEEVE
5. SLEEVE SHALL BE MIN. 18 GA. FOR FIRE DAMPERS UP TO 36"X24" AND 14 GA. FOR DAMPERS EXCEEDING 36"X24" SLEEVE SHALL TERMINATE FLUSH WITH FIRE RATED WALL.
6. MOUNTING ANGLES TO BE MIN. 1-1/2" X 1-1/2" X 14 GA. ANGLE FRAME, SHALL BE WELDED OR BOLTED TO ALL FOUR SIDES OF THE SLEEVE (DO NOT SECURE ANGLE TO WALL)

NOTES:

1. FIRE DAMPER TO BE LABELED IN ACCORDANCE WITH UL STANDARDS, AND STATE FIRE MARSHALL APPROVED.
2. INSTALLATION DETAILS SHALL MEET NFPA 90A & B REQUIREMENTS.
3. LOCATE ACCESS DOOR FOR BEST ACCESS TO LINK.
4. FUSIBLE LINK TO BE RATED FOR 50% ABOVE MAXIMUM OPERATING TEMPERATURE OF SYSTEM.
5. FOR STAINLESS STEEL FIRE DAMPER METAL GAUGE, REFER TO MANUFACTURER RECOMMENDATIONS.
6. FIRE DAMPER SHALL BE RATED FOR DYNAMIC DUTY.
7. SLEEVE SHALL TERMINATE FLUSH WITH FIRE RATED WALL.

07 FIRE DAMPER WITH ACCESS PANEL DETAIL
SCALE: NOT TO SCALE

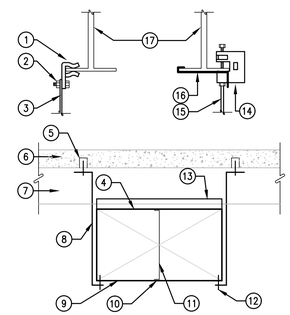

NOTE:
FOLLOW SMACNA GUIDELINES FOR DUCT SUPPORT.

KEYED NOTES

1. FRICTION CLAMP.
2. NUT & BOLT.
3. HANGER STRAP.
4. ARRANGE SEAM JOINTS TO MISS BEAMS.
5. INSERT-DO NOT INSERT INTO BOTTOM OF BEAMS OR JOISTS.
6. CEILING SLAB.
7. CONSTRUCTION BEAM.
8. 1" X 18 GA. STRAP HANGER (ONE HANGER ON DUCTS 31" AND UP).
9. DUCT WITH FLAT SEAM CONSTRUCTION (STANDARD "S" SLIP SNUG TO BEAM).
10. 3/16" SD 64BS POP RIVETS (TWO EACH AT TOP & BOTTOM OF VERTICAL STIFFENER).
11. 1-1/2" X 16 GA. STEEL BAR SUPPORT LOCATED CLOSE TO STIFFENER: DUCT WIDTH TO 24" - NOT REQUIRED; DUCT WIDTH 25" TO 47" - ONE (1) REQUIRED.
12. #6 X 3/8" S/M SCREW (TYP).
13. ANGLE STIFFENER FOR DUCT WIDTH 25" TO 40": 1" STANDING "S" OR 1" X 1" X 1/2" ANGLE.
14. C-CLAMP WITH RETAINING CLIP OR WITH LOCK NUT (OPTIONAL).
15. HANGING ROD.
16. RETAINING CLIP.
17. STRUCTURAL.

08 DUCT SUPPORT DETAIL
SCALE: NOT TO SCALE

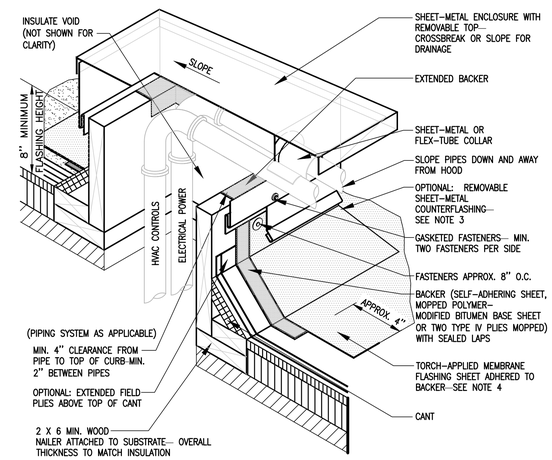

NOTES:

1. THIS DETAIL ILLUSTRATES ANOTHER METHOD OF ELIMINATING PITCH POCKETS AND AN OPTIONAL METHOD OF GROUPING PIPING THAT MUST PENETRATE THE ROOF.
2. WHERE THE SHEET-METAL ENCLOSURE OVERLAPS THE BASE FLASHING AT LEAST 3 INCHES, THE REMOVABLE SHEET-METAL COUNTERFLASHING IS NOT REQUIRED.
3. WHEN POTENTIAL FIRE HAZARDS CAN BE MITIGATED, NRCA CONSIDERS IT ACCEPTABLE TO INSTALL TORCH-APPLIED POLYMER-MODIFIED BITUMEN SHEET OVER THE SPECIFIED BACKER FLASHING USING THE DIRECT TORCHING METHOD PROVIDED LOW OUTPUT (50,000 BTU OUTPUT OR LESS) TORCHING EQUIPMENT IS USED. WHEN POTENTIAL FIRE HAZARDS CANNOT BE ADEQUATELY MITIGATED, TORCH-APPLIED POLYMER-MODIFIED BITUMEN SHEET SHALL BE INSTALLED USING INDIRECT TORCHING METHODS, SUCH AS THE TORCH-AND-FLOP APPLICATION METHOD.
4. FOR ROOF SYSTEMS WITH FACTORY-APPLIED GRANULE SURFACING, PROPERLY PREPARE CAP SHEET TO RECEIVE FLASHING.

09 HVAC PIPING ROOF PENETRATION DETAIL
SCALE : NOT TO SCALE

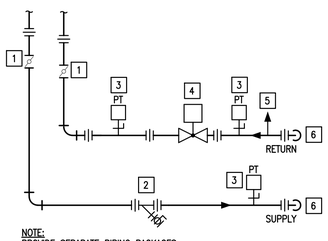

KEYED NOTES

1. 2-1/2" & LARGER BUTTERFLY VALVES FOR SHUTOFF, LINE SIZE; BALL VALVES FOR 2" AND BELOW
2. Y STRAINER WITH 3/4" BALL VALVE ON DISCHARGE
3. PRESSURE/TEMPERATURE TEST PLUG WITH COCK AND CAP
4. 2-WAY MODULATING DDC CONTROL VALVE WITH ELECTRIC ACTUATOR, PROVIDED BY CONTROLS CONTRACTOR INSTALLED BY MECHANICAL CONTRACTOR
5. AUTOMATIC AIR VENT W/MANUAL SHUT-OFF
6. DIELECTRIC STEEL/COPPER CONNECTION AT UNIT

NOTE:
PROVIDE SEPARATE PIPING PACKAGES FOR TOP AND BOTTOM UNITS OF DUAL PATH AIR HANDLERS.

CHILLED WATER COIL
10 CONNECTION SCHEMATIC
SCALE : NOT TO SCALE

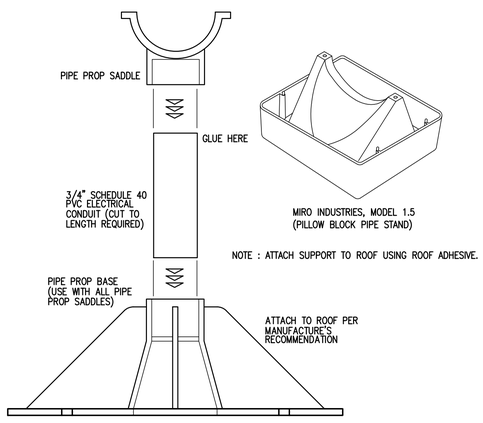

NOTE : ATTACH SUPPORT TO ROOF USING ROOF ADHESIVE.

11 CONDENSATE PIPE SUPPORT DETAIL
SCALE : NOT TO SCALE

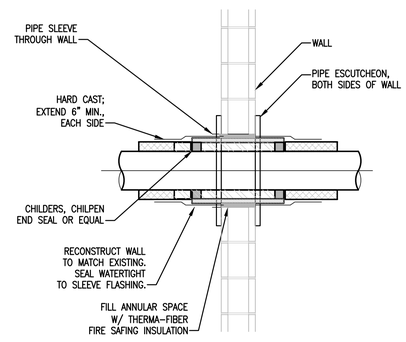

12 PIPE PENETRATION AT WALL DETAIL
SCALE: NOT TO SCALE

ethos engineering
119 W. VAN BUREN AVE. STE.101
HARLINGEN, TX
PHONE: 956-230-3435
TEXAS REGISTERED ENGINEERING FIRM F-15998

No.	REVISIONS	BY

GMS ARCHITECTS
1150 paredes line rd.
brownsville
texas 78526
(956) 546-0110
fax (956) 546-0196

SAN BENITO CISD
ADDITIONS AND RENOVATIONS AT SAN BENITO HS AND SULLIVAN ELEMENTARY

SAN BENITO TEXAS

BID PACKAGE "A"
SAN BENITO HIGH SCHOOL

STATE OF TEXAS
CESAR A. GONZALEZ
108611
LICENSED
8.2.2019

COPYRIGHT 2019
GOMEZ MENDEZ SAENZ INC.
ARCHITECTS-PLANNERS

DATE	AUGUST 2, 2019
SCALE	As Shown
DRAWN	ETHOS
JOB	19V32
SHEET	AM5.01

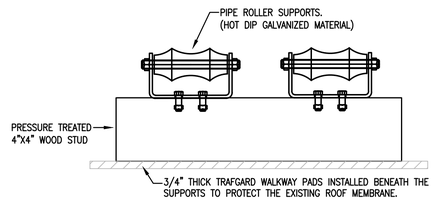

CHW PIPING
01 ROOF SUPPORT DETAIL
SCALE : NOT TO SCALE

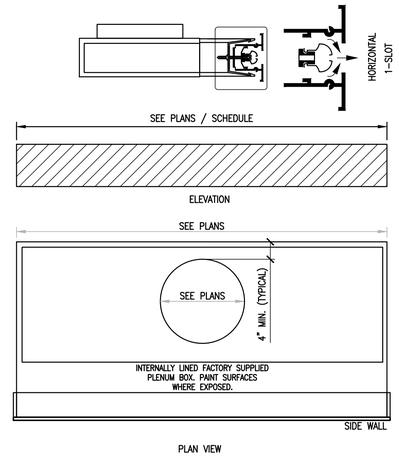

02 LINEAR DIFFUSER DETAIL
SCALE: NOT TO SCALE

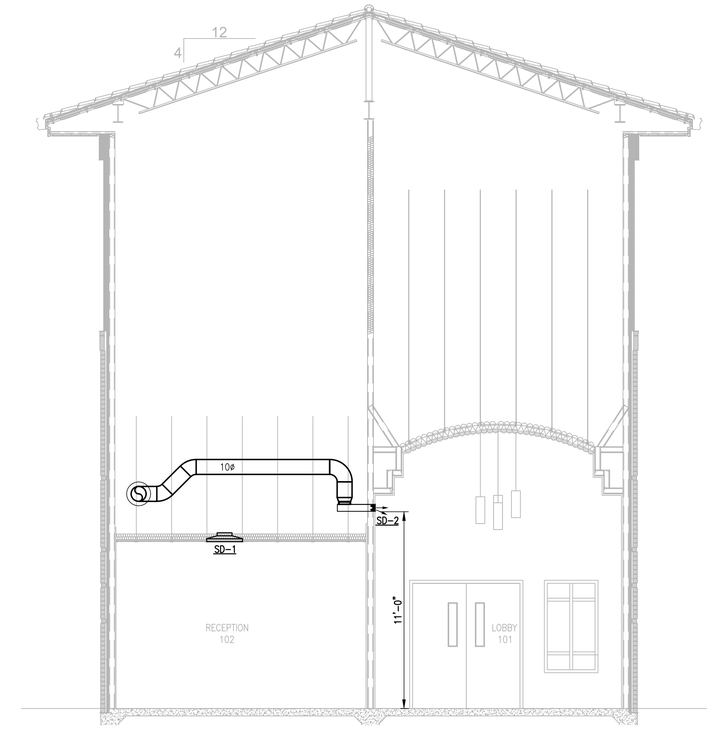

03 MECHANICAL ELEVATION
SCALE: 1/4" = 1'- 0"

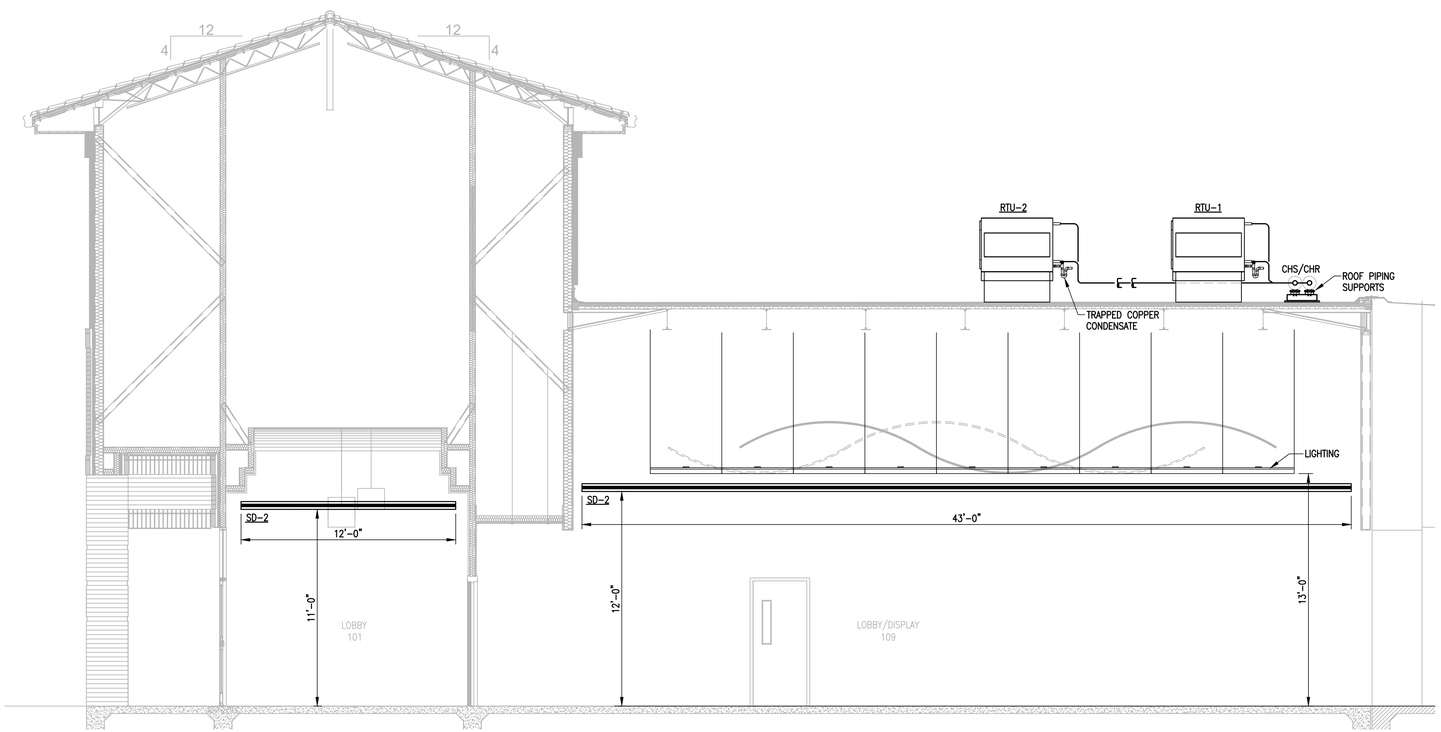

04 MECHANICAL ELEVATION
SCALE: 1/4" = 1'- 0"

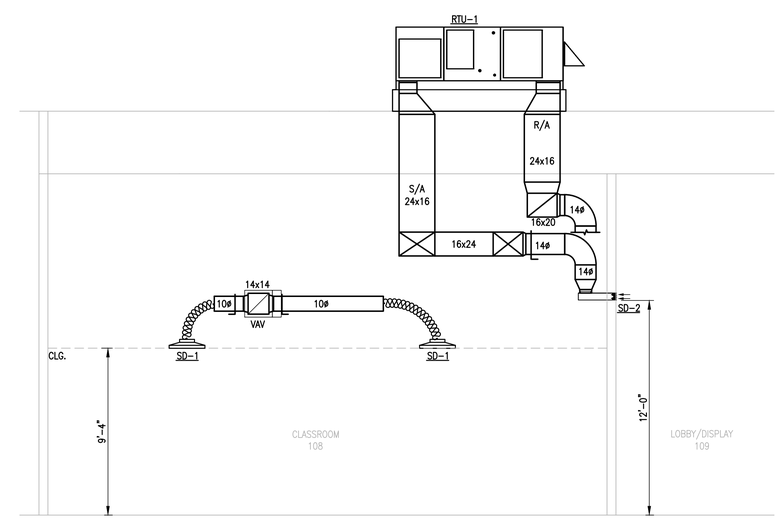

05 MECHANICAL ELEVATION
SCALE: 1/4" = 1'- 0"

ethos engineering
119 W. VAN BUREN AVE. STE.101
HARLINGEN, TX
PHONE: 956-230-3435
TEXAS REGISTERED
ENGINEERING FIRM
F-15998

No.	REVISIONS	BY

GMS ARCHITECTS
1150 paredes line rd.
brownsville
texas 78526
(956) 546-0110
fax (956) 546-0196

SAN BENITO CISD
ADDITIONS AND RENOVATIONS AT SAN BENITO HS AND SULLIVAN ELEMENTARY
SAN BENITO TEXAS

BID PACKAGE
"A"
SAN BENITO
HIGH SCHOOL

COPYRIGHT 2019
GOMEZ MENDEZ SAENZ INC.
ARCHITECTS-PLANNERS

DATE	AUGUST 2, 2019
SCALE	As Shown
DRAWN	ETHOS
JOB	19V32
SHEET	AM5.02

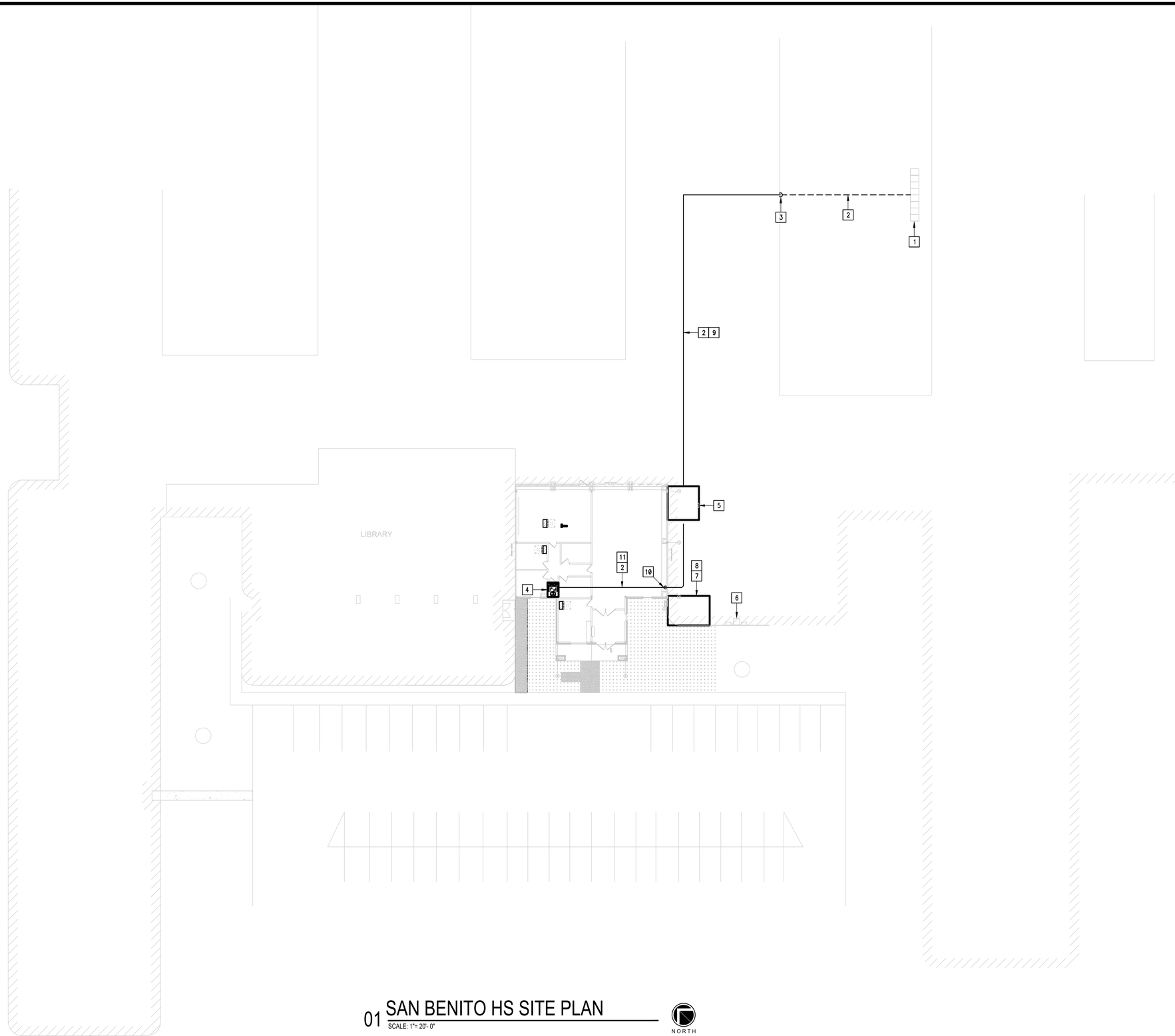

01 SAN BENITO HS SITE PLAN

SCALE: 1"= 20'- 0"

NORTH

GENERAL NOTES:

1. COORDINATE WORK AMONG ALL DISCIPLINES. IT IS NOT THE INTENT OF THESE DOCUMENTS TO DICTATE WHO MUST DO THE WORK. ALL WORK SHOWN IS THE RESPONSIBILITY OF THE (PRIME) CONTRACTOR.
2. FIELD VERIFY PROJECT SITE EXISTING CONDITIONS AND ELEVATIONS PRIOR TO BEGINNING ANY WORK.
3. COORDINATE ELECTRICAL AND PLUMBING WITH GENERAL CONSTRUCTION.
4. PHASING AND SEQUENCE OF CONSTRUCTION SHALL BE PER ARCHITECTURAL DRAWINGS AND SPECIFICATIONS.
5. FIELD VERIFY/SPOT EXACT LOCATIONS AND EXISTING CONDITIONS OF EXISTING PLUMBING, AND ELECTRICAL. IT IS THE INTENT OF THESE PLANS TO PROVIDE A COMPLETE AND WORKABLE SYSTEMS. SHOULD BIDDER FIND OMISSIONS OR DISCREPANCIES IN THE PLANS, BIDDER SHALL NOTIFY THE ENGINEER PRIOR TO THE BID DATE AND A WRITTEN CLARIFICATION WILL BE ISSUED.
6. DAMAGED ITEMS SHALL BE REPAIRED AT NO ADDITIONAL COST TO OWNER. CONTRACTORS ARE REQUIRED TO SEARCH AND INVESTIGATE FOR EXISTING UTILITIES BEFORE EXCAVATING.
7. ALL MATERIALS AND LABOR, WHETHER SPECIFICALLY INDICATED ON PLANS OR NOT, WHICH ARE NECESSARY FOR THE PROPER INSTALLATION AND FUNCTION OF THE SYSTEM SHALL BE FURNISHED BY THIS CONTRACTOR. INCLUDE ALL COSTS OF CHANGES, IF/AS REQUIRED IN BID PROPOSAL.
8. PROVIDE J-BOXES (POLYMER CONCRETE) AS REQUIRED FOR PULL WIRING.
9. ELECTRICAL WIRING SHALL NOT BE SPLICED BELOW GRADE.
10. PERFORM ALL WORK PER LATEST VERSION OF NATIONAL ELECTRICAL CODE, AND APPLICABLE LOCAL CODES AND ORDINANCES, UNLESS DRAWINGS OR SPECIFICATIONS HAVE MORE STRINGENT REQUIREMENTS.
11. CONTRACTOR IS RESPONSIBLE FOR ALL PERMITS AND FEES ASSOCIATED WITH PROJECT, INCLUDING FEES FOR INSPECTIONS, APPLICATIONS, AND PROVISION OF NEW SERVICES.
12. CONTRACTOR WHO WILL ACTUALLY PERFORM WORK MUST APPLY FOR ALL REQUIRED PERMITS.
13. NOTIFY ENGINEER OF ANY ASPECTS OF DESIGN WHICH ARE THOUGHT TO BE IN NONCOMPLIANCE WITH APPLICABLE CODES.
14. COORDINATE ALL WORK WITH OTHER TRADES; COORDINATE SCHEDULE OF WORK WITH ALL SUB-CONTRACTORS TO ACHIEVE SMOOTH FLOW OF CONSTRUCTION.
15. SEAL AROUND ELECTRICAL RACEWAYS AT ALL WALLS, A/C ROOMS AND WALL LOUVER PENETRATIONS WITH FIREPROOF CAULKING. REF SPECS. PROVIDE FLASHING AROUND PENETRATION, BOTH INSIDE AND OUTSIDE, TO PROVIDE FINISHED LOOK.
16. TIME OR MONEY ALLOWANCES WILL NOT BE MADE TO ACCOMMODATE UTILITY CONFLICTS THAT CAN BE REASONABLY RESOLVED BY COORDINATION DURING SHOP DRAWING PHASE.
17. CONTRACTOR SHALL REVIEW COMPLETE DOCUMENTS PRIOR TO SUBMITTAL OF PROPOSAL TO GAIN COMPLETE UNDERSTANDING OF PROJECT SCOPE, WORK BY OTHERS, AND ELECTRICAL WORK ASSOCIATED WITH OTHER DISCIPLINES.
18. MAINTAIN MANUFACTURER RECOMMENDED CLEARANCE AROUND ALL EQUIPMENT.
19. AFFIX ID TAGS TO ALL DIVISION 26 EQUIPMENT.
20. CONTRACTOR IS RESPONSIBLE FOR COORDINATION WITH MECHANICAL AND PLUMBING CONTRACTOR REGARDING EQUIPMENT SIZES AND TYPES OF ELECTRICAL INTERFACE EQUIPMENT REQUIRED.
21. FIELD VERIFY ALL CONDITIONS AND MEASURE DIMENSIONS WITHIN THE BUILDING PRIOR TO ORDERING EQUIPMENT AND/OR PROCEEDING WITH INSTALLATION.
22. ALL EQUIPMENT SHALL BE FACTORY TESTED, AND CONTRACTOR SHALL VERIFY THEIR CONDITION PRIOR TO INSTALLATION. CONTRACTOR IS RESPONSIBLE FOR EQUIPMENT DAMAGED DURING MOVING AND INSTALLATION.
23. EQUIPMENT FOUND DEFECTIVE PRIOR TO FINAL ACCEPTANCE SHALL BE REPLACED AT NO COST TO OWNER.
24. WORK TO BE DONE UNDER ALLOWANCES BECOMES AN INTEGRAL PART OF THE PROJECT AND RESPONSIBILITY OF CONTRACTOR ONCE ALLOWANCE IS APPROVED.
25. SLEEVE ALL EXTERIOR WALL PENETRATIONS.
26. CONTRACTOR SHALL NOT PROCEED WITH ANY WORK INVOLVING A CHANGE IN PROJECT SCOPE OR COST WITHOUT FIRST HAVING OBTAINED ENGINEER'S APPROVAL IN WRITING. UNLESS ENGINEER HAS AGREED TO SUCH CHANGE PRIOR TO IT BEING DONE, AND HAS AGREED THAT AN INCREASE IN COST ASSOCIATED WITH SUCH CHANGE IS WARRANTED; CONTRACTOR WILL NOT BE REIMBURSED FOR SUCH CHANGE.

ELECTRICAL KEYED NOTES:

1. APROXIMATE LOCATION OF EXISTING SWITCHBOARD.
2. PROVIDE NEW FEEDER.
3. RISE UP RACEWAYS ALONG EXTERIOR AND UP TO ROOF.
4. APPROXIMATE LOCATION OF NEW PANEL "HA".
5. APPROXIMATE LOCATION OF EXISTING NOTIFIER FIRE ALARM CONTROL PANEL.
6. APPROXIMATE LOCATION OF EXISTING DMP INTRUSION DETECTION PANEL.
7. APPROXIMATE LOCATION OF EXISTING MDF ROOM.
8. APPROXIMATE LOCATION OF EXISTING VALCOM CLASS CONNECTION IP 6000 INTERCOM HEAD END EQUIPMENT.
9. PROVIDE RACEWAY SUPPORTS ON ROOF. REFER TO DETAIL 11/AE6.01.
10. ROUTE INTO NEW BUILDING AND RISE UP IN FURR DOWN.
11. AT EXPOSED CEILING RACEWAYS SHALL BE SECURED TO STRUCTURE STEEL AS HIGH AS POSSIBLE.

ethos engineering
119 W. VAN BUREN AVE. STE.101
HARLINGEN, TX
PHONE: 956-230-3435
TEXAS REGISTERED
ENGINEERING FIRM
F-15998

No.	REVISIONS	BY

GMS ARCHITECTS
1150 paredes line rd.
brownsville
texas 78526
(956) 546-0110
fax (956) 546-0196

SAN BENITO CISD
ADDITIONS AND RENOVATIONS AT SAN BENITO HS AND SULLIVAN ELEMENTARY
SAN BENITO TEXAS

BID PACKAGE "A"
SAN BENITO HIGH SCHOOL

STATE OF TEXAS
RAY PEYNADO
125390
LICENSED
PROFESSIONAL ENGINEER
8.2.2019

COPYRIGHT 2019
GOMEZ MENDEZ SAENZ INC.
ARCHITECTS/PLANNERS

DATE	AUGUST 2, 2019
SCALE	As Shown
DRAWN	ETHOS
JOB	19V32
SHEET	AE1.01

ABBREVIATIONS:

A	AMPS	EMS	ENERGY MANAGEMENT SYSTEM	NTS	NOT TO SCALE
ABC	ABOVE CEILING LINE	EXT.	EXTERNAL OR EXTERIOR	OA	OUTSIDE AIR
AC	ABOVE COUNTER BACKSPLASH	FACP	FIRE ALARM CONTROL PANEL	OAU	OUTSIDE AIR UNIT
ACCU	AIR COOLED CONDENSING UNIT	FCU	FAN COIL UNIT	P	POLE(S)
AHU	AIR HANDLING UNIT	FD	FIRE DAMPER	PA	PUBLIC ADDRESS
AFF	ABOVE FINISHED FLOOR	FS	FLAT SCREEN	PH	PHASE
B.	BOTTOM	G.	GROUND	RM.	ROOM
BLC.	BELOW CEILING LINE	GA.	GAGE	SS	STAINLESS STEEL
C.	CONDUIT OR COMMON	GALV.	GALVANIZED	TSTAT	THERMOSTAT
CLG.	CEILING	GRND.	GROUND	UG	UNDERGROUND
COMB.	COMBINATION	HP	HORSEPOWER	UNO	UNLESS OTHERWISE NOTED
COND.	CONDUIT	HVAC	HEATING, VENTILATION, & AIR CONDITIONING	V	VOLTS
CU.	COPPER			VAV	VARIABLE AIR VOLUME
DDC	DIRECT DIGITAL CONTROLS	INT.	INTRUSION DETECTION	VFD	VARIABLE FREQUENCY DRIVE
DISC.	DISCONNECT	MECH	MECHANICAL	WACU	WALL AIR CONDITIONING UNIT.
EDH	ELECTRIC DUCT HEATER	MS	MOTOR STARTER	W	WIRE
EF	EXHAUST FAN	MOCP	MAX. OVERCURRENT PROTECTION		

GENERAL SYMBOL LEGEND:

SYMBOL	DESCRIPTION	MNTG. HT. UNO (SEE NOTE 1)
	DISCONNECT SWITCH – NON FUSED	AS REQUIRED
	DISCONNECT SWITCH – FUSED	AS REQUIRED
	EQUIPMENT CONNECTION	AS REQUIRED
	ELECTRICAL PANELBOARD – SURFACE MOUNTED	AS REQUIRED
	ELECTRICAL PANELBOARD – RECESSED/FLUSH MOUNTED	AS REQUIRED
	UNDERGROUND RACEWAY	AS REQUIRED
	CONCEALED RACEWAY	AS REQUIRED
	CONDUIT OR EMT HOMERUN TO PANELBOARD CONCEALED IN WALLS OR ABOVE CEILING. LONG CROSSMARKS DENOTE NUMBER OF "HOT" CONDUCTORS SHORT CROSSMARKS INDICATE NEUTRALS AND DOTS INDICATE NUMBER OF GROUND CONDUCTORS. ARROW INDICATES HOME RUN TO ELECTRICAL PANEL.	AS REQUIRED

DOOR ACCESS SYSTEMS SYMBOL LEGEND:

SYMBOL	DESCRIPTION	MNTG. HT. UNO (SEE NOTE 1)
RE	DOOR REQUEST TO EXIST SENSOR – PROVIDE BACK BOX WITH 1/2" RACEWAY STUBBED TO POWER SUPPLY ABOVE ACCESSIBLE CLG.	– – – –
ML	DOOR MAGNETIC LOCK – PROVIDE BACK BOX WITH 1/2" RACEWAY STUBBED TO POWER SUPPLY ABOVE ACCESSIBLE CLG.	12" ABC
CR	DOOR PROXIMITY CARD READER – PROVIDE BACK BOX WITH 1/2" RACEWAY STUBBED TO POWER SUPPLY ABOVE ACCESSIBLE CLG.	48" AFF
RB	DOOR RELEASE BUTTON – PROVIDE BACK BOX WITH 1/2" RACEWAY STUBBED TO POWER SUPPLY ABOVE ACCESSIBLE CLG.	48" AFF
MS	AUDIO/VIDEO MASTER STATION – PROVIDE BACK BOX WITH 1/2" RACEWAY STUBBED INTO ACCESSIBLE CLG. SEE DETAIL	– – – –
DS	AUDIO/VIDEO DOOR STATION – PROVIDE BACK BOX WITH 1/2" RACEWAY STUBBED INTO ACCESSIBLE CLG. SEE DETAIL	48" AFF
CEU	CENTRAL EXCHANGE UNIT. SEE DETAIL	– – – –

NOTES:

1.) 48" AFF INDICATES TO TOP OF DEVICE;
ALL OTHER MOUNTING HEIGHTS REFER TO CENTERLINE OF DEVICE.
REFER TO DOOR ACCESS SYSTEM DETAIL.

LIGHTING SYMBOL LEGEND:

SYMBOL	DESCRIPTION	MNTG. HT. UNO (SEE NOTE 1)
	2'X4' LIGHT FIXTURE – TYPE AS NOTED	– – – –
	EMERGENCY 2'X4' LIGHT FIXTURE–TYPE AS NOTED CONNECT BATTERY PACK TO BE ON AT ALL TIMES (UNSWITCHED)	– – – –
	SURFACE/WRAPAROUND LIGHT FIXTURE	– – – –
	SURFACE/WRAPAROUND EMERGENCY LIGHT FIXTURE CONNECT BATTERY PACK TO BE ON AT ALL TIMES (UNSWITCHED)	– – – –
	SINGLE FACE EXIT SIGN CEILING OR WALL MOUNTING (DIRECTIONAL ARROWS WHERE INDICATED)	12" ABV. EGRESS OPENING
	DOUBLE FACE EXIT SIGN CEILING OR WALL MOUNTING (DIRECTIONAL ARROWS WHERE INDICATED)	12" ABV. EGRESS OPENING
	EMERGENCY LIGHTING UNIT	8'–0"AFF
	WALL MOUNT LIGHT FIXTURE – TYPE AS NOTED	– – – –
PC	OUTDOOR PHOTO CELL WALL MOUNTED	12'–0"AFF

NOTES:

1.) REFERENCE LIGHT FIXTURE SCHEDULE FOR ALL MOUNTING HEIGHTS.

LIGHTING CONTROLS SYMBOL LEGEND:

SYMBOL	DESCRIPTION	MNTG. HT. UNO (SEE NOTE 1)
A PODM	nPODM 1 CHANNEL ON/OFF CHANNEL	48"AFF
A POD KEY	nPOD KEY DIGITAL KEYSWITCH ON/OFF TOGGLE	48"AFF
A POD 2P	nPODM 2P 2 CHANNEL ON/OFF TOGGLE	48"AFF
A POD 4PDX	nPODM 4P DX 4 CHANNEL ON/OFF TOGGLE WITH DIMMING	48"AFF
A POD DX	nPODM DX 1 CHANNEL ON/OFF CHANNEL WITH DIMMING	48"AFF
nCM	nCM PDT 9 STANDARD RANGE 360° SENSOR – CEILING MOUNT	CLG.
nCM	nCM PDT 10 EXTENDED RANGE 360° SENSOR – CEILING MOUNT	CLG.
nPP	nPP16 POWER/RELAY PACK: 16A 120/270 VAC	ABV. CLG.
nPP DS	nPP16 DS POWER/RELAY PACK: 16A 120/270 VACC W/ 0–10VDC DIMMING VIA SIDE SLOT	ABV. CLG.
nWV PDT	nWV PDT 16 CORNER MOUNT 120° CORNER MOUNT SENSOR	10' AFF
PC	DIGITAL OUTDOOR PHOTO CELL WALL MOUNTED – LC&D SEE DETAIL	12' AFF

NOTES:

1.) 48" AFF INDICATES TO TOP OF DEVICE;
ALL OTHER MOUNTING HEIGHTS REFER TO CENTERLINE OF DEVICE.

WIRING DEVICES SYMBOL LEGEND:

SYMBOL	DESCRIPTION	MNTG. HT. UNO (SEE NOTE 1)
	DUPLEX TAMPER RESISTANT RECEPTACLE – HUBBELL MODEL #BR20XTR	18"AFF
FS	DUPLEX RECEPTACLE FOR FLAT SCREEN – HUBBELL MODEL #CR5352X	84"AFF
GFCI WICP	DUPLEX RECEPTACLE TAMPER RESISTANT W/ GROUND FAULT INTERRUPTING TYPE – HUBBELL MODEL #GFTWRST20X AND WHILE IN USE WEATHERPROOF COVER – HUBBELL MODEL #WP26EH	18"AFF
AC	DUPLEX RECEPTACLE TAMPER RESISTANT – HUBBELL MODEL #B300XTR MOUNT @ +4" HORIZONTALLY ABOVE COUNTER BACKSPLASH (U.N.O.)	4"ACB
	JUNCTION BOX W/ BLANK STAINLESS STEEL COVERPLATE	AS REQUIRED
WB	DUPLEX RECEPTACLE FOR WHITE BOARD PROJECTOR – HUBBELL MODEL #CR5352X	AS REQUIRED

NOTES:

1.) 48" AFF INDICATES TO TOP OF DEVICE;
18" AFF INDICATES TO TOP OF DEVICE;
ALL OTHER MOUNTING HEIGHTS REFER TO CENTERLINE OF DEVICE.
AC INDICATES 4" ABOVE COUNTER TO BOTTOM OF DEVICE.
U.N.O. INDICATES UNLESS NOTED OTHERWISE.

FLOOR BOX SYMBOL LEGEND:

SYMBOL	DESCRIPTION	MNTG. HT. UNO (SEE NOTE 1)
	FLOOR BOX W/ COVER PLATES FOR WIRING DEVICES AS INDICATED. PROVIDE SPECIAL SYSTEMS RACEWAYS: 2–1.5" (DATA) – HUBBELL MODEL #CFB4G30/24GCCVBRSC, 2–#FBMPDUP,2–FBMPBNK.	FLOOR

NOTES:

1.) TOP OF FLOOR BOX TO BE FLUSH WITH FINISHED FLOOR. SEE ARCHITECTURAL DRAWINGS FOR FLOOR TYPES.

FIRE ALARM SYMBOL LEGEND:

SYMBOL	DESCRIPTION	MNTG. HT. UNO (SEE NOTE 1)
PS	FIRE ALARM MANUAL PULLSTATION – PROVIDE BACKBOX WITH 1/2"C AND PULLWIRE.	48"AFF
AV AV	FIRE ALARM STROBE HORN CEILING OR WALL MOUNTED – PROVIDE 15/75 CANDELA U.N.O. – PROVIDE BACKBOX WITH 1/2"C AND PULLWIRE.	80"AFF
SS SS WG	FIRE ALARM SPEAKER STROBE CEILING OR WALL MOUNTED – PROVIDE BACKBOX WITH 1/2"C AND PULLWIRE. PROVIDE WIREGUARD "WG" WHERE DESIGNATED.	80"AFF
V V	FIRE ALARM STROBE LIGHT CEILING OR WALL MOUNTED – PROVIDE BACKBOX WITH 1/2"C AND PULLWIRE.	80"AFF
SD SD	FIRE ALARM SMOKE DETECTOR CEILING OR WALL MOUNTED – PROVIDE BACKBOX WITH 1/2"C AND PULLWIRE.	CLG.
	FIRE ALARM CONTROL/VOICE EVACUATION PANEL (FLUSH MOUNTED)	– – – –
	FIRE ALARM ANNUNCIATOR PANEL (SURFACE MOUNTED)	– – – –

NOTES:

1.) 48" AFF INDICATES TO TOP OF DEVICE;
ALL OTHER MOUNTING HEIGHTS REFER TO CENTERLINE OF DEVICE.

SPECIAL SYSTEMS SYMBOL LEGEND:

SYMBOL	DESCRIPTION	MNTG. HT. UNO (SEE NOTE 1)
FS	3–GANG FLAT SCREEN OUTLET – PROVIDE LARGE CAPACITY WALL BOX HUBBEL MODEL NO. HBL263 WITH 1.5" RACEWAY STUBBED INTO ACCESSIBLE CLG., PULL WIRE, MUD RING AND HBL981 LOW VOLTAGE DIVIDER.	72"AFF
AV	MULTIMEDIA OUTLET – PROVIDE 2–GANG MUD RING SECURED TO METAL STUDS WITH METAL STRAP WITH 1.5" RACEWAY STUBBED INTO ACCESSIBLE CLG. W/ PULL WIRE AND MUD RING – SEE DETAIL.	18"AFF
	DATA OUTLET/VOICE OVER IP – PROVIDE BACK BOX WITH 1" RACEWAY STUBBED INTO ACCESSIBLE CLG. WITH PULL WIRE – SEE DETAIL.	18"AFF
WAP	WIRELESS ACCESS POINT – PROVIDE BACK BOX WITH 1" RACEWAY STUBBED INTO ACCESSIBLE CLG. WITH PULL WIRE – SEE DETAIL.	CLG.

NOTES:

1.) 48" AFF INDICATES TO TOP OF DEVICE;
ALL OTHER MOUNTING HEIGHTS REFER TO CENTERLINE OF DEVICE.

INTRUSION DETECTION SYMBOL LEGEND:

SYMBOL	DESCRIPTION	MNTG. HT. UNO (SEE NOTE 1)
MD	INTRUSION DETECTION MOTION DETECTOR FULL COVERAGE TYPE – PROVIDE BACKBOX WITH 1/2"C AND PULLWIRE.	9'–0"AFF
MD H	INTRUSION DETECTION MOTION DETECTOR HALLWAY COVERAGE TYPE – PROVIDE BACKBOX WITH 1/2"C AND PULLWIRE.	9'–0"AFF
GB	INTRUSION DETECTION GLASS BREAK SENSOR	ABV. CLG.
KP	INTRUSION DETECTION KEYPAD PROVIDE WITH STI COVER – PROVIDE BACKBOX WITH 1/2"C AND PULLWIRE.	48"AFF
DC	INTRUSION DETECTION DOOR MAGNETIC CONTACT – PROVIDE WITH 1/2"C AND PULLWIRE.	– – – –
S	INTRUSION DETECTION INDOOR SIREN – PROVIDE BACKBOX WITH 1/2"C AND PULLWIRE.	80"AFF
S WP	INTRUSION DETECTION OUTDOOR SIREN – PROVIDE BACKBOX WITH 1/2"C AND PULLWIRE.	10'–0" AFF

NOTES:

1.) 48" AFF INDICATES TO TOP OF DEVICE;
ALL OTHER MOUNTING HEIGHTS REFER TO CENTERLINE OF DEVICE.

INTERCOM SYSTEMS SYMBOL LEGEND:

SYMBOL	DESCRIPTION	MNTG. HT. UNO (SEE NOTE 1)
S	INTERCOM OUTDOOR HORN WEATHER PROOF – PROVIDE BACKBOX WITH 1/2"C AND PULLWIRE.	9'–6"AFF
IC	INTERCOM BUTTON – PROVIDE BACKBOX WITH 1/2"C AND PULLWIRE .	48"AFF
S	INTERCOM SPEAKER CEILING MOUNT	CLG.
H	INTERCOM ADMINISTRATION CONTROL STATION HANDSET – PROVIDE BACKBOX WITH 1"C AND PULLWIRE STUBBED INTO ACCESSIBLE CLG.	18"AFF

NOTES:

1.) 48" AFF INDICATES TO TOP OF DEVICE;
ALL OTHER MOUNTING HEIGHTS REFER TO CENTERLINE OF DEVICE.

ethos engineering
119 W. VAN BUREN AVE. STE.101
HARLINGEN, TX
PHONE: 956-230-3435
TEXAS REGISTERED
ENGINEERING FIRM
F-15998

No.	REVISIONS	BY

GMS ARCHITECTS
1150 paredes line rd.
brownsville
texas 78526
(956) 546-0110
fax (956) 546-0196

SAN BENITO CISD
ADDITIONS AND RENOVATIONS AT SAN BENITO HS AND SULLIVAN ELEMENTARY
SAN BENITO TEXAS

BID PACKAGE "A"
SAN BENITO HIGH SCHOOL

STATE OF TEXAS
RAY PEYNADO
125390
LICENSED
PROFESSIONAL ENGINEER
8.2.2019

COPYRIGHT 2019
GOMEZ MENDEZ SAENZ INC.
ARCHITECTS-PLANNERS

DATE	AUGUST 2, 2019
SCALE	As Shown
DRAWN	ETHOS
JOB	19V32
SHEET	AE2.01

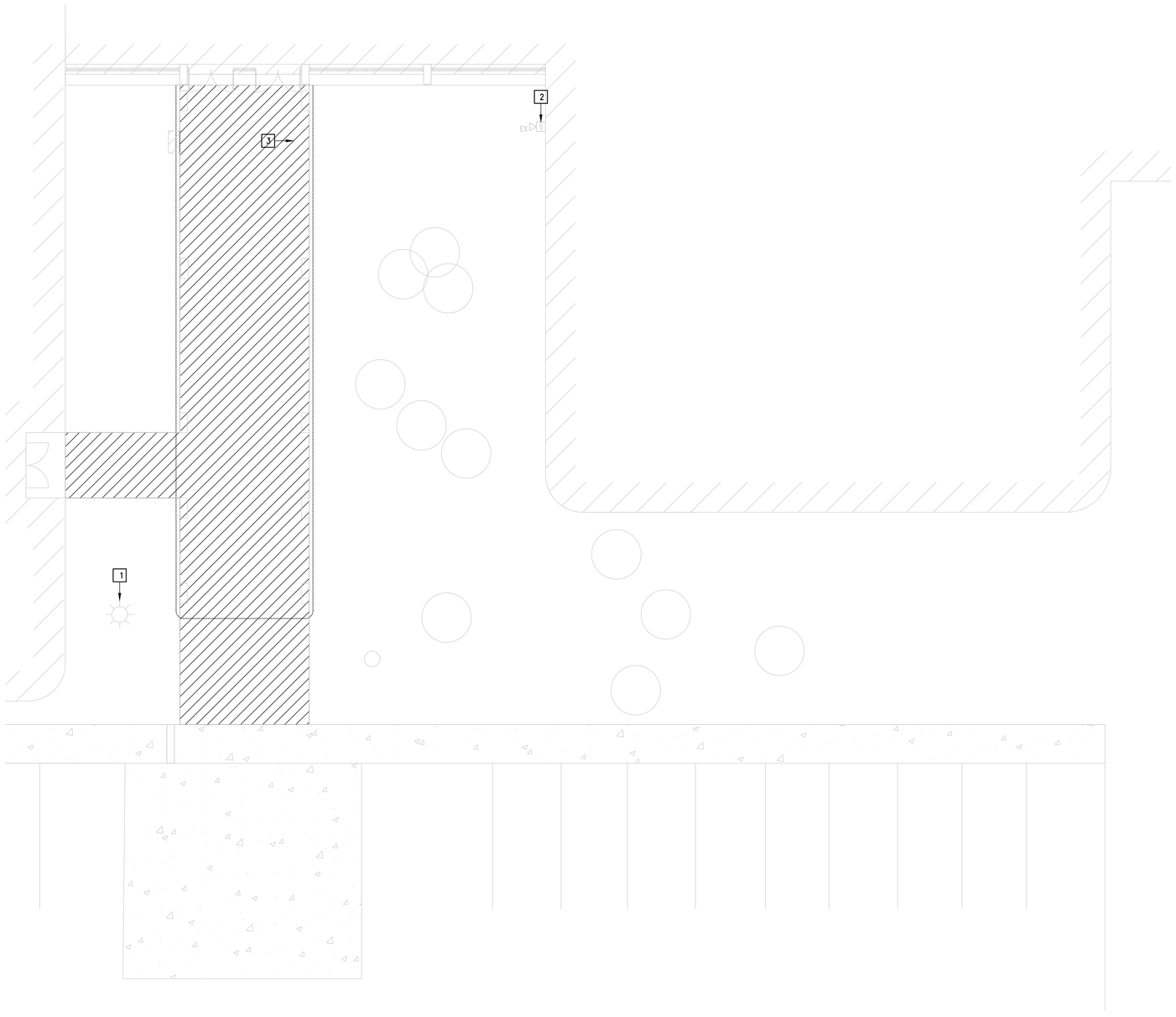

01 SAN BENITO HIGH SCHOOL DEMOLITION PLAN

SCALE: 1/8" = 1'- 0"

NORTH

GENERAL NOTES:

1. REMOVED MATERIALS SHALL BELONG TO OWNER. DELIVER THEM TO OWNERS DESIGNATED LOCATION. IF OWNER DOES NOT WANT THE REMOVED MATERIALS THEN REMOVE THEM FROM SITE & PROPERLY DISPOSE OF THEM.
2. CONTRACTOR SHALL REMOVE & DISPOSE OF ALL EXISTING ELECTRICAL EQUIPMENT, CONDUIT & WIRING IN AREAS WHERE WORK IS TO TAKE PLACE, EVEN IF NOT SPECIFICALLY INDICATED IN THIS DRAWING, UNLESS NOTED OTHERWISE IN DRAWINGS.
3. REFER TO ARCHITECTURAL DEMOLITION DRAWINGS FOR WALLS AND CEILINGS TO BE REMOVED.
4. IF REMOVAL OF EXISTING ELECTRICAL SYSTEMS RENDERS EXISTING ELECTRICAL SYSTEMS DOWNSTREAM TO REMAIN INOPERABLE, PROVIDE J-BOXES, CONDUIT WIRING AND SPLICES ABOVE ACCESSIBLE CEILINGS IN ORDER TO CONTINUE OPERATION.
5. REFER TO ARCHITECTURAL SPECIFICATIONS FOR PHASING REQUIREMENTS.
6. CONTRACTOR TO COOPERATE WITH OWNER DURING CONSTRUCTION OPERATION TO MINIMIZE CONFLICTS AND FACILITATE OWNER USAGE. PERFORM THE WORK SO AS NOT TO INTERFERE WITH OWNERS OPERATIONS.
7. CONTRACTOR SHALL PROVIDE AN INVENTORY OF ALL EXISTING LIGHTING PRIOR TO REMOVAL. CONTRACTOR SHALL NOTE BY ROOM THE LIGHT FIXTURE TYPE & QUANTITY, LAMP TYPE AND QUANTITY PER FIXTURE. SUBMIT INVENTORY TO ENGINEER.
8. ITEMS DESIGNATED WITH AN "EX" ARE EXISTING TO REMAIN AS IS.

KEYED NOTES:

1. EXISTING ELECTRIC UTILITY (AEP) LIGHT POLE TO BE REMOVED. COORDINATE REMOVAL WITH UTILITY COMPANY.
2. DISCONNECT AND REMOVE EXISTING INTERCOM OUTDOOR HORN.
3. DISCONNECT AND REMOVE EXISTING ADA PUSH BUTTON.

ethos engineering
119 W. VAN BUREN AVE. STE.101
HARLINGEN, TX
PHONE: 956-230-9435
TEXAS REGISTERED
ENGINEERING FIRM
F-15998

No.	REVISIONS	BY

GMS ARCHITECTS
1150 paredes line rd.
brownsville
texas 78526
(956) 546-0110
fax (956) 546-0196

SAN BENITO CISD
ADDITIONS AND RENOVATIONS AT SAN BENITO HS AND SULLIVAN ELEMENTARY

SAN BENITO TEXAS

BID PACKAGE "A"
SAN BENITO HIGH SCHOOL

STATE OF TEXAS
RAY PEYNADO
125390
LICENSED
PROFESSIONAL ENGINEER

8.2.2019

COPYRIGHT 2019
GOMEZ MENDEZ SAENZ INC.
ARCHITECTS-PLANNERS

DATE	AUGUST 2, 2019
SCALE	As Shown
DRAWN	ETHOS
JOB	19V32
SHEET	AE3.01

GENERAL NOTES:

1. LIGHTING BRANCH CIRCUIT HOMERUNS SHALL BE 3/4" – 2#12 & #12G. 20A/277V HOMERUNS EXCEEDING 200FT THE WIRE SIZE SHALL BE #10 & #8 FOR 275'.
2. INTERIOR LIGHTING CONTROLS SHALL BE BY VACANCY SENSORS.
3. MULTIPLE VACANCY SENSORS CONTROLLING A SINGLE OR MULTIPLE SWITCH SCHEME AND POWER PACKS SHALL BE CONNECTED WITH CLASS II #18 WIRING IN 1/2" RACEWAY.
4. EXTERIOR LIGHTING CONTROLS SHALL BE BY LIGHTING MANAGEMENT PANEL.
5. PROVIDE 0–10V SIGNAL WIRING TO EACH DIMMED LIGHT FIXTURE DRIVER AND WALL SWITCH.
6. ELECTRICAL BRANCH CIRCUIT HOMERUNS SHALL BE 3/4" – 2#12 & #12G. 20A/120V HOMERUNS EXCEEDING 100FT, THE WIRE SIZE SHALL BE #10 & #8 FOR 175'.
7. HOMERUNS – INSTALL NO MORE THAN THREE PER RACEWAY (INCLUDING LIGHTING BRANCH CIRCUITS); 3 INSULATED "HOT", 3 INSULATED "NEUTRAL AND 1 SHARED "GROUND".
8. PROVIDE ALL ELECTRICAL RECEPTACLES INSTALLED WITH THE GROUND OPENING IN THE "UP" POSITION.
9. PROVIDE J–HOOKS TO SUPPORT THE FIRE ALARM, INTRUSION DETECTION, VOICE, INTERCOM AND DATA CABLING.
10. PROVIDE FIRE STOPPING AT ALL FIRE WALL PENETRATIONS; PROVIDE EXPANSION PLATES & BONDING JUMPERS AT BUILDING EXPANSION JOINTS.
11. PROVIDE 1–2" RACEWAY (SLEEVE) 12" ABOVE CEILING AT ALL CLASSROOMS, RESTROOMS, OFFICES, ETC. DOORS THAT LEAD TO CORRIDORS (FLOOR TO CEILING WALLS) FOR SPECIAL SYSTEMS WIRING.
12. USE TAMPER RESISTANT RECEPTACLES THROUGHOUT.
13. EACH 20A/1P BRANCH CIRCUIT SHALL HAVE A DEDICATED NEUTRAL.

KEYED NOTES:

1. CONNECT EMERGENCY BATTERY PACK TO BE CHARGING AT ALL TIMES (UNSWITCHED). LIGHT FIXTURE SHALL BE OPERATED BY THE CORRESPONDING SWITCH – TYPICAL.
2. SWITCH VIA PHOTOCELL.
3. PROVIDE GROMMETS THROUGH COUNTERTOP TO ACCESS RECEPTACLES BELOW COUNTER INSIDE KNEE SPACE, CONCEAL RACEWAYS WITHIN MILLWORK BACK TO WALL.
4. MOUNT LIGHT FIXTURE TYPE "ME" AT 8'–0"AFF TO CENTER OF FIXTURE – TYPICAL.
5. PROVIDE EMERGENCY LIGHT FIXTURE WALL MOUNTED AT 8'–5" AFF.
6. CONNECT LOGO SIGN POWER SUPPLY. COORDINATE EXACT LOCATION WITH SIGN CONTRACTOR.
7. PROVIDE ACCESS CONTROL PANEL ABOVE CEILING. SEE DETAIL 05/AE6.01. CONNECT TO NEAREST 120V NON–GFCI CIRCUIT.
8. CONNECT MOTORIZED PROJECTION SCREEN BELOW BEAM; BRANCH CIRCUIT: 1/2" C 2#12 & #12G. SEE ARCHITECT DRAWINGS FOR EXACT LOCATION.
9. CONNECT BACK LIGHTED LETTERS POWER SUPPLY. COORDINATE EXACT LOCATION WITH SIGN CONTRACTOR.
10. CONNECT CEILING MOUNTED PROJECTOR. PROVIDE FLEXIBLE RACEWAY WITH 6'–0" OF SLACK. SEE DETAILS 09/E–8.1.
11. PROVIDE FIRE ALARM REMOTE ANNUNCIATOR FLUSH MOUNTED FACING LOBBY.
12. CONNECT PRE–WIRED/LIGHTED TROPHY CASE. PROVIDE A HARDWIRE CONNECTION AT TOP OF TROPHY CASE. PRIOR TO ANY ROUGH–IN COORDINATE POINT OF CONNECTION WITH APPROVED MANUFACTURE SHOP DRAWINGS.
13. PROVIDE 2–2.5" RACEWAYS FROM ACCESSIBLE CEILING TERMINATED AT EXISTING MDF ROOM. AT EXPOSED CEILING RACEWAYS SHALL BE SECURED TO STRUCTURE STEEL AS HIGH AS POSSIBLE.
14. PAINT ALL RACEWAYS, BOXES, SUPPORTING DEVICES, ETC. IN THIS AREA WITH EXPOSED CEILING. COORDINATE COLOR AND PAINT TYPE WITH ARCHITECT.
15. SUSPEND LIGHT FIXTURE TYPE 'B2' AT 13'–0"AFF TO BOTTOM OF FIXTURE – TYPICAL.
16. SUSPEND LIGHT FIXTURE TYPE 'G' AS NOTED AFF TO BOTTOM OF FIXTURE – TYPICAL.
17. SEE DETAIL 02/AE6.01 FOR MOUNTING DETAIL.
18. DROP DOWN IN FURR DOWN AND PENETRATE EXISTING BUILDING AT AN ACCESSIBLE LOCATION ABOVE THE EXISTING CEILING.
19. APPROXIMATE LOCATION OF NEW ELECTRIC UTILITY AREA LIGHT AND FLOOD LIGHT AIMED AT BUILDING. PROVIDE A $5,000 ALLOWANCE FOR THIS WORK. CONTRACTOR SHALL COORDINATE THIS WORK WITH A.E.P.
20. SURFACE MOUNT/SECURE DEVICE TO BOTTOM OF STRUCTURAL STEEL JOIST. TYPICAL IN THIS ROOM.
21. NO DUCTWORK OR PIPING TO BE ROUTED ABOVE ELECTRICAL GEAR. COORDINATE WITH OTHER TRADES – TYPICAL.

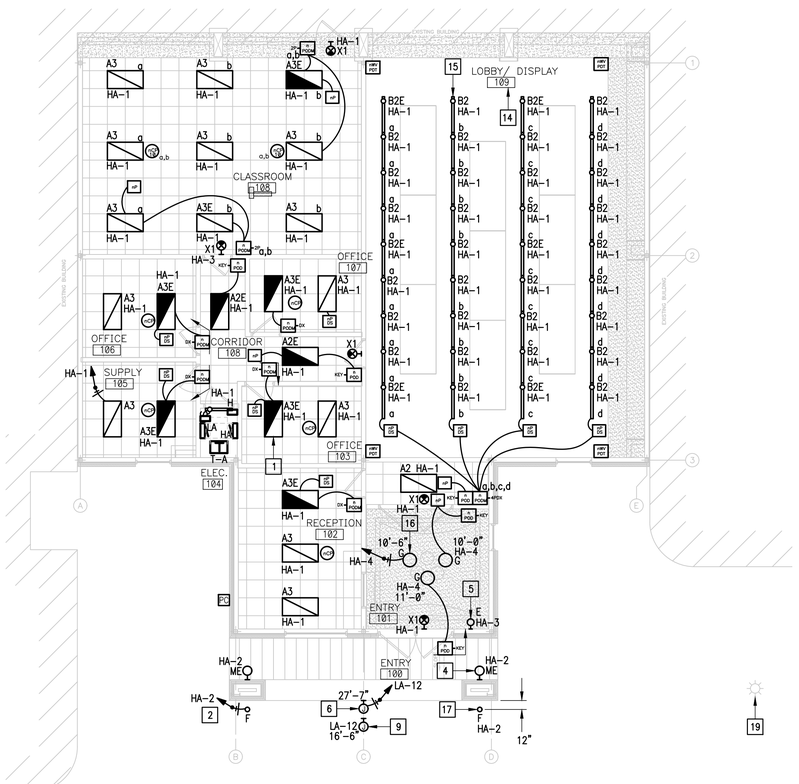

01 SAN BENITO HS LIGHTING PLAN

SCALE: 1/8" = 1'- 0"

NORTH

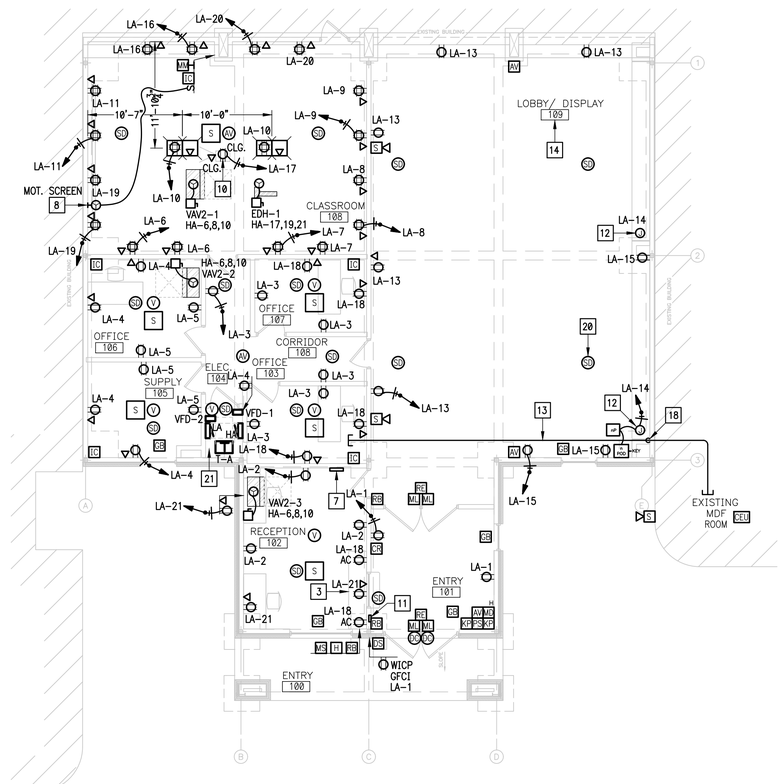

02 SAN BENITO HS ELECTRICAL PLAN

SCALE: 1/8" = 1'- 0"

NORTH

KEYPLAN

ethos engineering

119 W. VAN BUREN AVE. STE.101
HARLINGEN, TX
PHONE: 956-230-3435
TEXAS REGISTERED
ENGINEERING FIRM
F-15988

No.	REVISIONS	BY

GMS ARCHITECTS

1150 paredes line rd.
brownsville
texas 78526
(956) 546-0110
fax (956) 546-0196

SAN BENITO CISD ADDITIONS AND RENOVATIONS AT SAN BENITO HS AND SULLIVAN ELEMENTARY

SAN BENITO TEXAS

BID PACKAGE "A"
SAN BENITO HIGH SCHOOL

STATE OF TEXAS
RAY PEYNADO
125390
LICENSED PROFESSIONAL ENGINEER

8.2.2019

COPYRIGHT 2019
GOMEZ MENDEZ SAENZ INC.
ARCHITECTS-PLANNERS

DATE	AUGUST 2, 2019
SCALE	As Shown
DRAWN	ETHOS
JOB	19V32
SHEET	AE3.02

GENERAL NOTES:

1. HOMERUNS – INSTALL NO MORE THAN THREE PER RACEWAY(INCLUDING LIGHTING BRANCH CIRCUITS).
2. PROVIDE ALL ELECTRICAL RECEPTACLES INSTALLED WITH THE GROUND OPENING IN THE "UP" POSITING.
3. PROVIDE FIRE STOPPING AT ALL FIRE WALL PENETRATIONS; PROVIDE EXPANSION PLATES & BONDING JUMPERS AT BUILDING EXPANSION JOINTS.
4. USE TAMPER RESISTANT RECEPTACLES THROUGHOUT.
5. EACH 20A/1P BRANCH CIRCUIT SHALL HAVE A DEDICATED NEUTRAL.

KEYED NOTES:

1. CONNECT ROOF TOP UNIT. ROUTE CONNECTION THROUGH ROOF CURB AND SECURE DISCONNECT TO EQUIPMENT. COORDINATE DISCONNECT LOCATION WITH HVAC CONTRACTOR TO ENSURE NOT TO OBSTRUCT ACCESSIBLE PANELS. SEE DETAIL 02/AE3.03 – TYPICAL.
2. CONNECT INTEGRAL GFCI RECEPTACLE TO NEAREST 120V NON-GFCI CIRCUIT.
3. PROVIDE ABOVE CEILING/BELOW ROOF – TYPICAL.

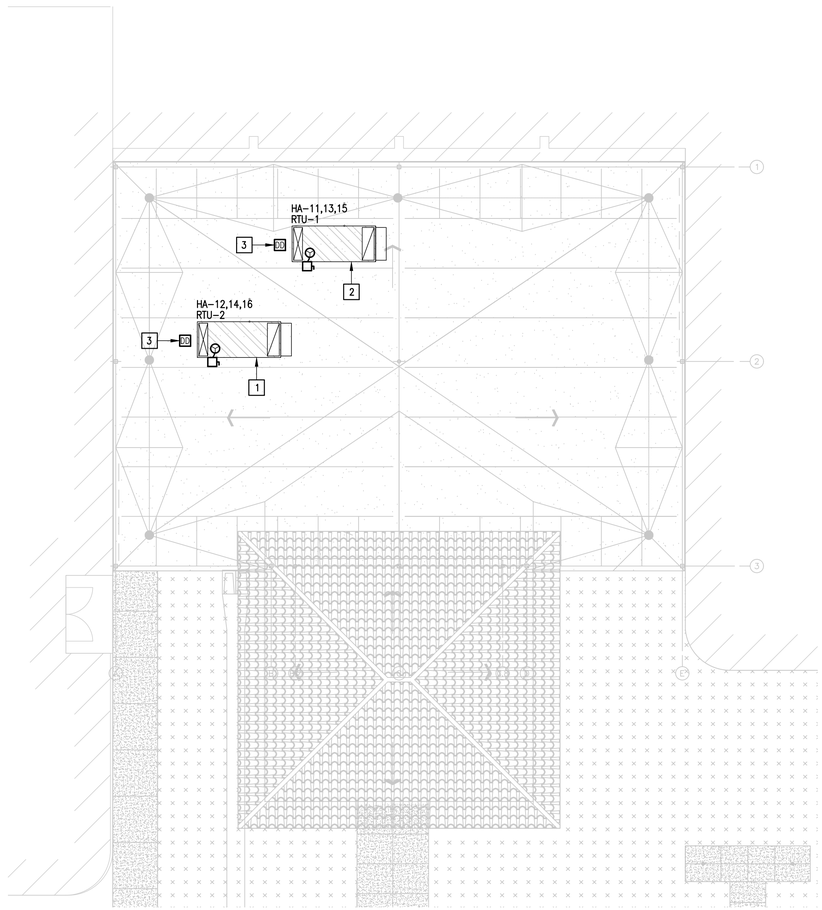

01 SAN BENITO HS ROOF PLAN
SCALE: 1/8" = 1'- 0"

NORTH

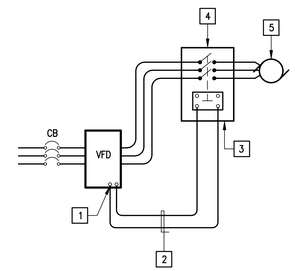

KEYED NOTES:

1. EMERGENCY STOP TERMINALS OF VFD CONTROL PANEL; COORDINATE WIRING CONNECTION WITH VFD MANUFACTURER.
2. 1/2" RACEWAY WITH #18 AWG THWN.
3. PROVIDE ELECTRICAL INTERLOCK KIT FOR DISCONNECT TO BREAK CONTROL CIRCUIT BEFORE MAIN SWITCH BLADES BREAK
4. EXISTING DISCONNECT.
5. EXISTING AHU.

03 VFD DIAGRAM DETAIL
SCALE : NOT TO SCALE

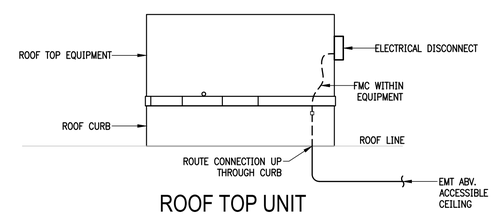

02 ROOF TOP UNIT CONNECTION DETAIL
SCALE : NOT TO SCALE

KEYPLAN

ethos engineering

119 W. VAN BUREN AVE. STE.101
HARLINGEN, TX
PHONE: 956-230-3435
TEXAS REGISTERED
ENGINEERING FIRM
F-15998

No.	REVISIONS	BY

GMS ARCHITECTS
1150 paredes line rd.
brownsville
texas 78526
(956) 546-0110
fax (956) 546-0196

SAN BENITO CISD
ADDITIONS AND RENOVATIONS AT SAN BENITO HS AND SULLIVAN ELEMENTARY
SAN BENITO TEXAS

BID PACKAGE "A"
SAN BENITO HIGH SCHOOL

STATE OF TEXAS
RAY PEYNADO
125390
LICENSED
PROFESSIONAL ENGINEER
8.2.2019

COPYRIGHT 2019
GOMEZ MENDEZ SAENZ INC.
ARCHITECTS-PLANNERS

DATE	AUGUST 2, 2019
SCALE	As Shown
DRAWN	ETHOS
JOB	19V32
SHEET	AE3.03

01 POWER PACK
nPP16, nPP16 DS
SCALE : NOT TO SCALE

02 TYPE A2,A2E, A3, A3E
S C A L E : NOT TO SCALE

03 TYPE B2 & B2E
SCALE : NOT TO SCALE

LUMINAIRE SCHEDULE

CALLOUT	LAMP	DESCRIPTION	DRIVER	MOUNTING	MODEL	INPUT WATTS	VOLTS	NOTE	LUMENS	LUMEN MAINT.	LM HOURS
A2	LED	2'X4' LAY-IN INDIRECT TROFFER	0-10V	RECESSED	LITHONIA: 2BLT4 40L EZ1 LP840 WILLIAMS: LT24 L40 AF DIM UNV	34	277V 1P 2W		4032	L80	60,000
A2E	LED	2'X4' LAY-IN INDIRECT TROFFER	0-10V	RECESSED	LITHONIA: 2BLT4 40L EZ1 LP840 EL14L WILLIAMS: LT24 L40 AF DIM UNV EM/10W	34	277V 1P 2W	PROVIDE WITH AN EMERGENCY BATTERY PACK.	4032	L80	60,000
A3	LED	2'X4' LAY-IN INDIRECT TROFFER	0-10V	RECESSED	LITHONIA: 2BLT4 48L EZ1 LP840 WILLIAMS: LT24 L52 AF DIM UNV	45	277V 1P 2W		5234	L80	60,000
A3E	LED	2'X4' LAY-IN INDIRECT TROFFER	0-10V	RECESSED	LITHONIA: 2BLT4 48L EZ1 LP840 EL14L WILLIAMS: LT24 L52 AF DIM UNV EM/10W	45	277V 1P 2W	PROVIDE WITH AN EMERGENCY BATTERY PACK.	5234	L80	60,000
B2	LED	SUSPENDED LINEAR	0-10V	PENDANT	FINELITE: HP-4 ID-4'-S-H-840-TG-F-277V-FA-FE-SC-C4 FORUM: SAUD 44 65 40 SAT C 4 UNV WH DIM	43	277V 1P 2W	PROVIDE A 10 YEAR WARRANTY.	4594	L70	200,000
B2E	LED	SUSPENDED LINEAR	0-10V	PENDANT	FINELITE: HP-4 ID-4'-S-H-840-TG-F-277V-FA-FE-SC-C4-EM FORUM: SAUD 44 65 40 SAT C 4 UNV WH DIM EMLED	43	277V 1P 2W	PROVIDE A 10 YEAR WARRANTY AND WITH AN EMERGENCY BATTERY PACK.	4594	L70	200,000
E	LED	EMERGENCY LIGHTING UNIT	STANDARD	WALL	LITHONIA: AFO W MVOLT N SD MULE LIGHTING: MAKO-3 X SD	2	277V 1P 2W	PROVIDE WITH A NI-CAD BATTERY PACK & SELF DIAGNOSTICS. STANDARD FINISH TO BE SELECTED AT A LATER DATE.	1080	L70	60,000
F	LED	IN-GRADE WALL WASHER	0-10V	IN-GRADE	TARGETTI: KPLM-ND-HE-SP-L2-40-1DU2525B-1DU2521-1DU2530 LUMASCAPE: LS363LED 16 W4 A M 82 23 Q 01 09	16	277V 1P 2W	PROVIDE FIXTURE U.L. LISTED FOR WET LOCATIONS.	1245		
G	LED	DECORATIVE PENDANT	0-10V	PENDANT	LUMMETA: AP51814-L411-40K-90-277V CHAMELEON: SB-R-CUSTOM	21	277V 1P 2W		2140		
H	LED	3' STRIP LIGHT	0-10V	SURFACE	LITHONIA: CLX L36 SEF _ RDL _ MVOLT GZ10 40K CRI HE WILLIAMS: 75R-3-L40-8-40-DIM-UNV	28	277V 1P 2W		3750	L70	50,000
ME	LED	WALLPACK	0-10V	SURFACE	LITHONIA: WSR LED 1 10A700/40K SR4 MVOLT ELCW X RAYON: T650LED DL 30 UN112 40 T4 X EM	22	277V 1P 2W	PROVIDE UL LISTED FOR WET LOCATIONS AND WITH AN EMERGENCY BATTERY PACK. STANDARD COLOR FINISH TO BE SELECTED AT A LATER DATE.	2655	L90	100,000
X1	LED	SINGLE SIDED EXIT SIGN		WALL/CEILING	BEGHELLI: FTZ-SA-LR1-UWW MULE LIGHTING: WLCX-1-R-W-U-SD	3	277V 1P 2W	PROVIDE WITH A UNIVERSAL MOUNTING CANOPY, LIGHT EMITTING DIODES, & A NI-CAD BATTERY PACK.	0		

GENERAL NOTES:
1. OTHER LIGHT FIXTURE MANUFACTURERS THAN THOSE LISTED ON THIS SCHEDULE ARE REQUIRED TO OBTAIN PRIOR APPROVAL BY SUBMITTING CUT SHEETS OF THEIR SUBSTITUTIONS AT LEAST (10) DAYS PRIOR TO BID. CUT SHEETS SHALL INDICATE/HIGHLIGHT PHOTOMETRIC CURVE, EFFICIENCY & CONSTRUCTION FOR DIRECT COMPARISON.
2. EXTRA MATERIALS: SEE SPECIFCATIONS.
3. EMERGENCY BATTERY PACKS SHALL BE COMPLETE FACTORY INSTALLED WITH NI-CAD BATTERY, CHARGER INDICATING LIGHT, ELECTRONIC CIRCUITRY, 1400 LUMENS OUTPUT, 90 MINUTES DURATION & FIVE FULL YEARS WARRANTY.
4. FURNISH ALL 2' X 4' AND 2' X 2' LAY-IN LIGHT FIXTURES WITH INTEGRAL CEILING CLIPS.

04 TYPE E
SCALE : NOT TO SCALE

05 TYPE F
S C A L E : NOT TO SCALE

06 TYPE G
S C A L E : NOT TO SCALE

07 TYPE H
SCALE : NOT TO SCALE

08 TYPE ME
SCALE : NOT TO SCALE

09 TYPE X1
SCALE : NOT TO SCALE

10 WALL SENSOR
nWSX LV
SCALE : NOT TO SCALE

11 WALLSTATION SWITCH
nPODM
SCALE : NOT TO SCALE

12 WALLSTATION SWITCH
nPOD KEY
SCALE : NOT TO SCALE

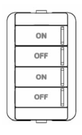

13 WALLSTATION SWITCH
nPODM 2P
SCALE : NOT TO SCALE

14 WALLSTATION SWITCH
nPODM DX 2P or 4P
SCALE : NOT TO SCALE

15 CEILING SENSOR
nCM PDT 9, nCM PDT 10
SCALE : NOT TO SCALE

ethos engineering
119 W. VAN BUREN AVE. STE.101
HARLINGEN, TX
PHONE: 956-230-3435
TEXAS REGISTERED
ENGINEERING FIRM
F-15998

No.	REVISIONS	BY

GMS ARCHITECTS
1150 paredes line rd.
brownsville
texas 78526
(956) 546-0110
fax (956) 546-0196

SAN BENITO CISD
ADDITIONS AND RENOVATIONS AT SAN BENITO HS AND SULLIVAN ELEMENTARY
SAN BENITO TEXAS

BID PACKAGE "A"
SAN BENITO HIGH SCHOOL

STATE OF TEXAS
RAY PEYNADO
125390
LICENSED
PROFESSIONAL ENGINEER
8.2.2019

COPYRIGHT 2019
GOMEZ MENDEZ SAENZ INC.
ARCHITECTS·PLANNERS

DATE	AUGUST 2, 2019
SCALE	As Shown
DRAWN	ETHOS
JOB	19V32
SHEET	AE4.01

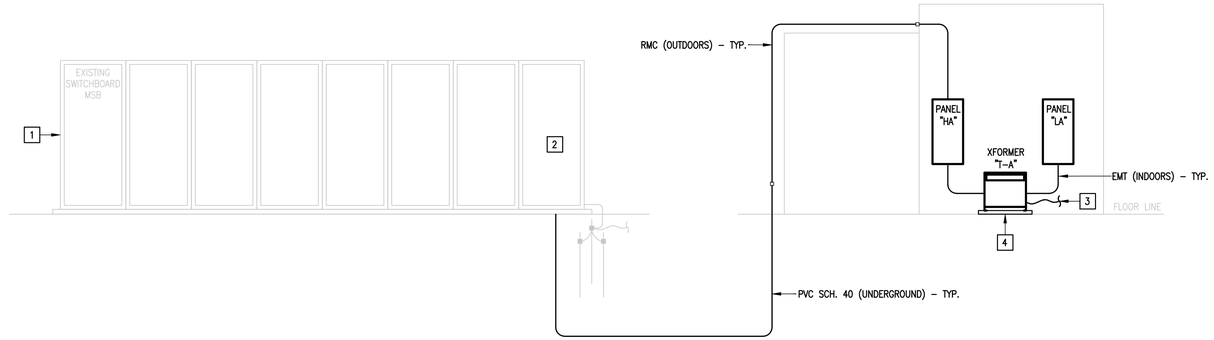

01 ELECTRICAL RISER DIAGRAM

SCALE : NONE

KEYED NOTES:

1. EXISTING SIEMENS TYPE SB3 SWITCHBOARD 3,000A, 277/480V, 3ø,4W.
2. CONNECT NEW DISTRIBUTION PANELBOARD "HA" TO EXISTING SWITCHBOARD. PROVIDE A 225A/3P BREAKER AND REQUIRED MOUNTING HARDWARE.
3. PROVIDE #1/0 BARE COPPER GROUND ELECTRODE CONDUCTOR. CADWELD CONNECT TO EXISTING STRUCTURE STEEL.
4. PROVIDE 4" HOUSEKEEPING CONCRETE PAD.

FEEDER SCHEDULE:

FEEDER AMPS	CONDUIT AND FEEDER	FEEDING THESE DEVICES
100	1.25" – 4#3 & #8G	HA
225	2.5" – 4#4/0 & #4G	LA

SIZING METHOD: COPPER 75°C

EQUIPMENT CONNECTION SCHEDULE:

DESIGN	HP/KW	FLA	MCA	MOCP	VOLTAGE	DISCONNECT	BRANCH CIRCUIT
RTU–1	3 HP	4.8	6.0	20	480V/3PHASE	(1) VARIABLE FREQUENCY DRIVE. (2) 30A, 3PNF, 600V, NEMA 3R.	1/2" – 3#12 & #12G
EDH–1	22.5 KW	27.1	–	35	480V/3PHASE	60A, 3PNF, 600V, NEMA 1.	3/4" – 3#8 & #8G
RTU–2	3 HP	4.8	6.0	20	480V/3PHASE	(1) VARIABLE FREQUENCY DRIVE. (2) 30A, 3PNF, 600V, NEMA 3R.	1/2" – 3#12 & #12G
VAV–2–1,2,3	14 KW	16.8	–	30	480V/3PHASE	30A, 3PNF, 600V, S/N, NEMA 1 EACH.	3/4" – 4#10 & #10G

(1) PROVIDED BY DIVISION 23. INSTALLED AND CONNECTED BY DIVISION 26.
(2) PROVIDE WITH INTERLOCK KIT. SEE DETAIL 03/AE3.03.
NOTE: LOCATE EQUIPMENT MEANS OF DISCONNECT WITHIN EQUIPMENT SIGHT. DO NOT INSTALL ON EQUIPMENT, BELOW DUCTWORK OR PLUMBING LINES.

TRANSFORMER SCHEDULE:

DESIGN	KVA	PV	SV	DEGREE RISE	CONNECTION	FREQ HZ	SERVES PANELS	CAT. NO.	PRIMARY FEEDER (75°C COPPER)
T–A	30	480	120/208	115	DELTA Y	60	LA	POWER SMITHS: Esaver20M–30–480–208–HD–T115–F60	1" – 3#6 & #10G

NOTE: PROVIDE SMALLER CASE SIZE 23"W X 15.5"D X 27.5"H.

LA

ROOM ELEC. 104 — VOLTS 208Y/120V 3P 4W — AIC 10,000
MOUNTING SURFACE — BUS AMPS 125 — MAIN BKR 100
FED FROM T–A — NEUTRAL 100% — LUGS STANDARD
NOTE PROVIDE A TYPE WRITTEN AS BUILT DIRECTORY THAT INCLUDES ROOM NUMBERS.

CKT #	CKT BKR	CIRCUIT DESCRIPTION	LOAD KVA A	LOAD KVA B	LOAD KVA C	CKT #	CKT BKR	CIRCUIT DESCRIPTION	LOAD KVA A	LOAD KVA B	LOAD KVA C
1	20/1	RECEPT.	0.54			2	20/1	RECEPT.	0.54		
3	20/1	RECEPT.		1.08		4	20/1	RECEPT.		0.9	
5	20/1	RECEPT.			0.72	6	20/1	RECEPT.			1
7	20/1	RECEPT.	1			8	20/1	RECEPT.	1		
9	20/1	RECEPT.		1		10	20/1	RECEPT.		1	
11	20/1	RECEPT.			1	12	20/1	LOGO SIGN			0.2
13	20/1	RECEPT.	0.9			14	20/1	LOGO SIGN	0.2		
15	20/1	RECEPT.		0.54		16	20/1	RECEPT.		1	
17	20/1	RECEPT.			0.18	18	20/1	RECEPT.			1.22
19	20/1	RECEPT.	1			20	20/1	RECEPT.	1		
21	20/1	RECEPT.		0.75		22	20/1	SPACE		0	
23	20/1	SPACE			0	24	20/1	SPACE			0
25	20/1	SPACE	0			26	20/1	SPACE	0		
27	20/1	SPACE		0		28	20/1	SPACE		0	
29	20/1	SPACE			0	30	20/1	SPACE			0
31	20/1	SPACE	0			32	20/1	SPACE	0		
33	20/1	SPARE		0		34	20/1	SPARE		0	
35	20/1	SPARE			0	36	20/1	SPARE			0
37	20/1	SPARE	0			38	20/1	SPARE	0		
39	20/1	SPARE		0		40	20/1	SPARE		0	
41	20/1	SPARE			0	42	20/1	SPARE			0
								TOTAL CONNECTED KVA BY PHASE	6.18	6.27	4.32

	CONN KVA	CALC KVA			CALC KVA
LIGHTING	0.4	0.5	(125%)	TOTAL LOAD	13.7
RECEPTACLES	16.4	13.2	(50%>10)	BALANCED 3–PHASE AMPS	38

HA

ROOM ELEC. 104 — VOLTS 480Y/277V 3P 4W — AIC 14,000
MOUNTING SURFACE — BUS AMPS 400 — MAIN BKR 225
FED FROM EXISTING MSB — NEUTRAL 100% — LUGS STANDARD
NOTE PROVIDE A TYPE WRITTEN AS BUILT DIRECTORY THAT INCLUDES ROOM NUMBERS.

CKT #	CKT BKR	CIRCUIT DESCRIPTION	LOAD KVA A	LOAD KVA B	LOAD KVA C	CKT #	CKT BKR	CIRCUIT DESCRIPTION	LOAD KVA A	LOAD KVA B	LOAD KVA C
1	20/1	LIGHTING	2.59			2	20/1	LIGHTING	0.076		
3	20/1	LIGHTING		0.005		4	20/1	LIGHTING		0.063	
5	60/3	**XFMR T–A			6.18	6	30/3	VAV2–1, VAV2–2, VAV2–3			4.67
7	|		6.27			8	|		4.67		
9	|			4.32		10	|			4.67	
11	20/3	* RTU–1			1.33	12	20/3	* RTU–2			1.33
13	|		1.33			14	|		1.33		
15	|			1.33		16	|			1.33	
17	35/3	EDH–1			7.5	18	20/3	SPARE			0
19	|		7.5			20	|		0		
21	|			7.5		22	|			0	
23	20/1	SPACE			0	24	20/1	SPACE			0
25	20/1	SPACE	0			26	20/1	SPACE	0		
27	20/1	SPACE		0		28	20/1	SPACE		0	
29	20/1	SPACE			0	30	20/1	SPACE			0
								TOTAL CONNECTED KVA BY PHASE	23.8	19.2	21

	CONN KVA	CALC KVA			CONN KVA	CALC KVA	
LIGHTING	3.13	3.91	(125%)	RECEPTACLES	16.4	13.2	(50%>10)
LARGEST MOTOR	3.99	0.998	(25%)	HEATING	36.5	36.5	(100%)
				COOLING	7.98	0	(0%)
				TOTAL LOAD		54.6	
				BALANCED 3–PHASE AMPS		65.7	

*PROVIDE HACR TYPE.
**PROVIDE ELECTRONIC TYPE WITH L.S.I. DIALS.

ethos engineering
119 W. VAN BUREN AVE. STE.101
HARLINGEN, TX
PHONE: 956-230-3435
TEXAS REGISTERED
ENGINEERING FIRM
F-15996

No.	REVISIONS	BY

GMS ARCHITECTS
1150 paredes line rd.
brownsville
texas 78526
(956) 546-0110
fax (956) 546-0196

SAN BENITO CISD
ADDITIONS AND RENOVATIONS AT SAN BENITO HS AND SULLIVAN ELEMENTARY
SAN BENITO TEXAS

BID PACKAGE "A"
SAN BENITO HIGH SCHOOL

STATE OF TEXAS
RAY PEYNADO
125390
PROFESSIONAL ENGINEER
8.2.2019

COPYRIGHT 2019
GOMEZ MENDEZ SAENZ INC.
ARCHITECTS-PLANNERS

DATE	AUGUST 2, 2019
SCALE	As Shown
DRAWN	ETHOS
JOB	19V32
SHEET	AE5.01

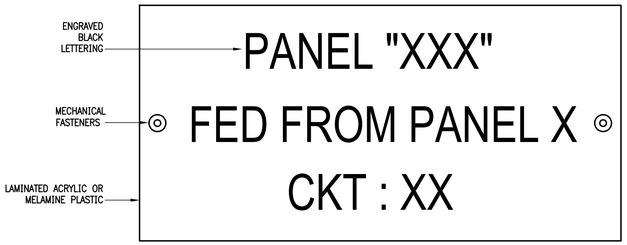

NOTE: ATTACH NAMEPLATES TO ALL ELECTRICAL GEAR AS NOTED ON SECTION 260553.

01 EQUIPMENT IDENTIFICATION LABEL DETAIL

SCALE : NOT TO SCALE

KEYED NOTES:

1. PROVIDE LIGHT FIXTURE AS SPECIFIED.
2. PROVIDE 4,000PSI CONCRETE FOUNDATION.
3. PROVIDE PEA GRAVEL FOR DRAINAGE.
4. PROVIDE DIRECT BURIAL IN-GRADE J-BOX.

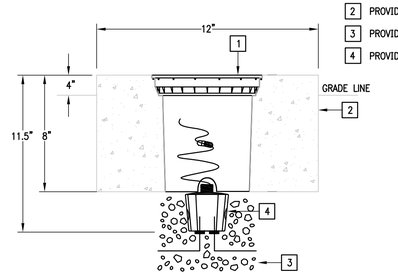

02 FIXTURE TYPE "F" MOUNTING DETAIL

SCALE : NOT TO SCALE

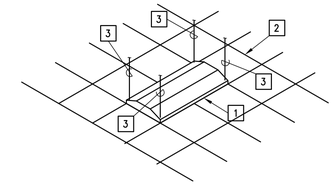

KEYED NOTES:

1. PROVIDE 2'x 4' LAY-IN LIGHT FIXTURE
2. SUSPENDED CEILING
3. PROVIDE TIE WIRE, CONNECT TO ALL FOUR CORNERS OF FIXTURE TO STRUCTURE ABOVE, INDEPENDENT OF CEILING SUPPORTS.

03 TYPICAL LAY-IN FIXTURE SUPPORT

SCALE : NOT TO SCALE

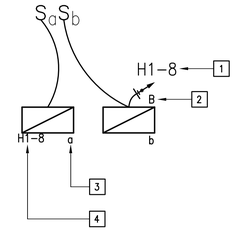

KEYED NOTES:

1. CIRCUIT HOMERUN
2. FIXTURE TYPE – REFER TO LIGHT FIXTURE SCHEDULE
3. INDICATES SWITCH CONTROLLING LIGHT FIXTURE.
4. INDICATES BRANCH CIRCUIT LIGHT FIXTURE IS CONNECTED TO

04 LIGHTING LEGEND DETAIL

SCALE : NOT TO SCALE

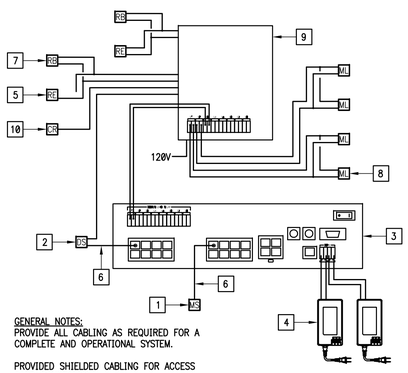

GENERAL NOTES:
PROVIDE ALL CABLING AS REQUIRED FOR A COMPLETE AND OPERATIONAL SYSTEM.

PROVIDED SHIELDED CABLING FOR ACCESS CARD CONNECTIONS.

PROVIDE PLENUM RATED CABLING FOR ABOVE CEILING APPLICATIONS.

KEYED NOTES:

1. PROVIDE AUDIO/VIDEO DESK TOP MASTER STATION AIPHONE MODEL NO. AX-8MV-W.
2. PROVIDE AUDIO/VIDEO/CARD READER SURFACE MOUNT DOOR STATION AIPHONE MODEL NO. AX-DVF-P.
3. PROVIDE RACK MOUNT CENTRAL EXCHANGE UNIT AIPHONE MODEL NO. AX-084C.
4. PROVIDE CENTRAL EXCHANGE UNIT POWER SUPPLY AIPHONE MODEL NO. PS-2420UL – TYPICAL.
5. PROVIDE DOOR REQUEST TO EXIT TYCO MODEL NO. T.REX-LT – TYPICAL.
6. PROVIDE CAT5e CABLE AND CONNECTORS.
7. PROVIDE DOOR RELEASE BUTTON ALARM CONTROLS MODEL NO. TS-14 – TYPICAL.
8. PROVIDE DOOR ELECTRO MAGNETIC LOCK SECO-LARM MODEL NO. 941SA-1K2PQ – TYPICAL.
9. PROVIDE ACCESS CONTROL UNIT NETAXS MODEL NO. NX4L1.
10. PROVIDE PROXIMITY CARD READER HID GLOBAL MODEL NO. 536B.

05 DOOR ACCESS SYSTEM DETAIL

SCALE : NOT TO SCALE

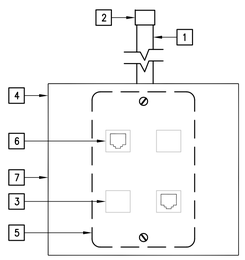

KEYED NOTES:

1. PROVIDE 1" EMT STUBBED ABOVE CLG.
2. PROVIDE INSULATING BUSHING
3. PROVIDE BLANK FILLER COVER
4. PROVIDE COVERPLATE
5. PROVIDE STEEL MUD RING
6. CATEGORY SIX JACK BY OWNER
7. PROVIDE 4"X4"X2-5/8" DEEP BOX

06 TYPICAL DATA/TELEPHONE OUTLET DETAIL

SCALE : NOT TO SCALE

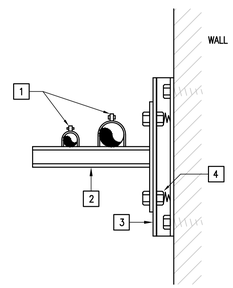

KEYED NOTES:

1. PROVIDE CONDUIT CLAMPS.
2. PROVIDE GALVANIZED UNISTRUT WALL BRACKET.
3. PROVIDE RAMSET OR BOLT GALVANIZED UNISTRUT TO WALL.
4. PROVIDE SELF HOLDING CLAMPING NUT WITH SPRING.

07 RACEWAY RUNS SUPPORT DETAIL

SCALE : NOT TO SCALE

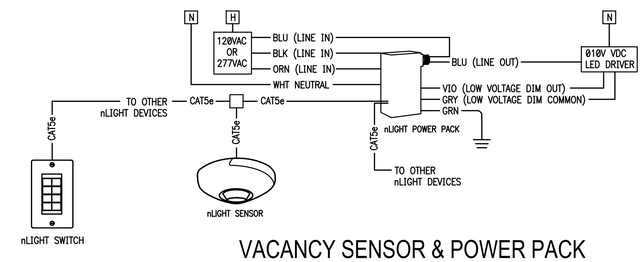

08 VACANCY SENSOR & POWER PACK WIRING DETAIL

SCALE : NOT TO SCALE

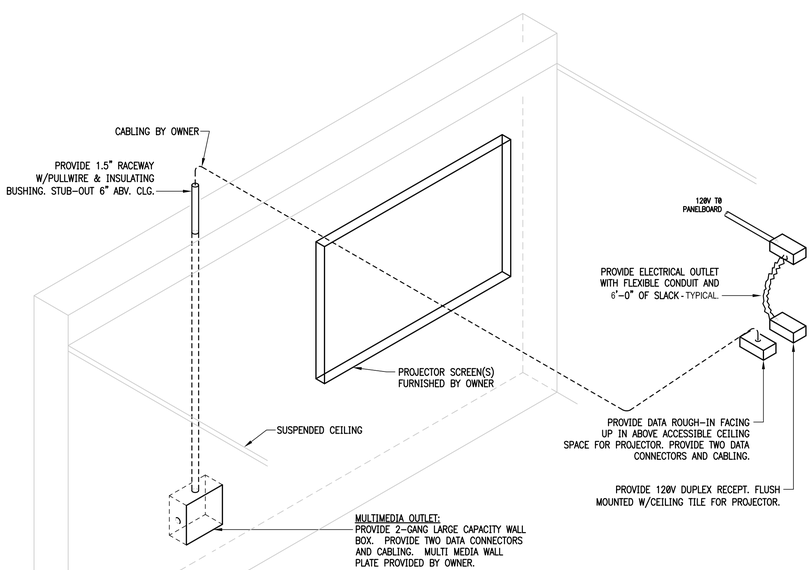

09 CLASSROOM/CONFERENCE ROOM MULTIMEDIA DETAIL

SCALE : NOT TO SCALE

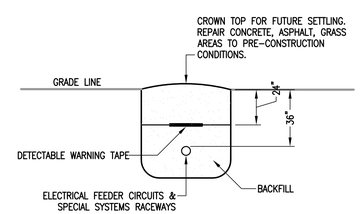

10 BURIAL DETAIL FOR ELECTRICAL RACEWAYS

SCALE : NONE

11 RACEWAY SUPPORT DETAIL

SCALE : NONE

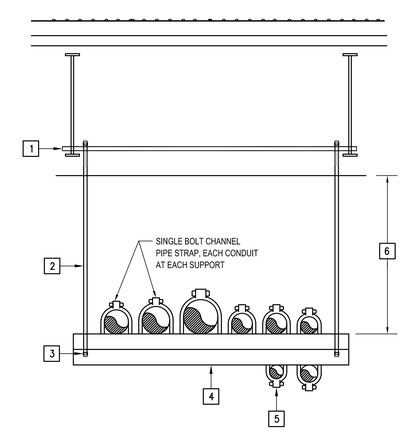

KEYED NOTES:

1. PROVIDE UNISTRUT STRUCTURAL CHANNEL SECURED TO TO JOIST AT BOTH ENDS.
2. PROVIDE 1/2" GALVANIZED THREADED ROD MINIMUM.
3. PROVIDE LOCKNUT.
4. PROVIDE GALVANIZED UNISTRUT 8'-0" O/C MAXIMUM.
5. 0'-1" MAXIMUM SIZE ON BOTTOM OF UNISTRUT.
6. VARIES.

12 HORIZONTAL RACEWAYS SUPPORT DETAIL

SCALE : NOT TO SCALE

KEYPLAN

ethos engineering
119 W. VAN BUREN AVE. STE.101
HARLINGEN, TX
PHONE: 956-230-3435
TEXAS REGISTERED ENGINEERING FIRM F-15998

No.	REVISIONS	BY

GMS ARCHITECTS
1150 paredes line rd.
brownsville
texas 78526
(956) 546-0110
fax (956) 546-0196

SAN BENITO CISD
ADDITIONS AND RENOVATIONS AT SAN BENITO HS AND SULLIVAN ELEMENTARY
SAN BENITO TEXAS

BID PACKAGE "A"
SAN BENITO HIGH SCHOOL

STATE OF TEXAS
RAY PEYNADO
125390
LICENSED PROFESSIONAL ENGINEER
8.2.2019

COPYRIGHT 2019
GOMEZ MENDEZ SAENZ INC.
ARCHITECTS-PLANNERS

DATE	AUGUST 2, 2019
SCALE	As Shown
DRAWN	ETHOS
JOB	19V32
SHEET	AE6.01

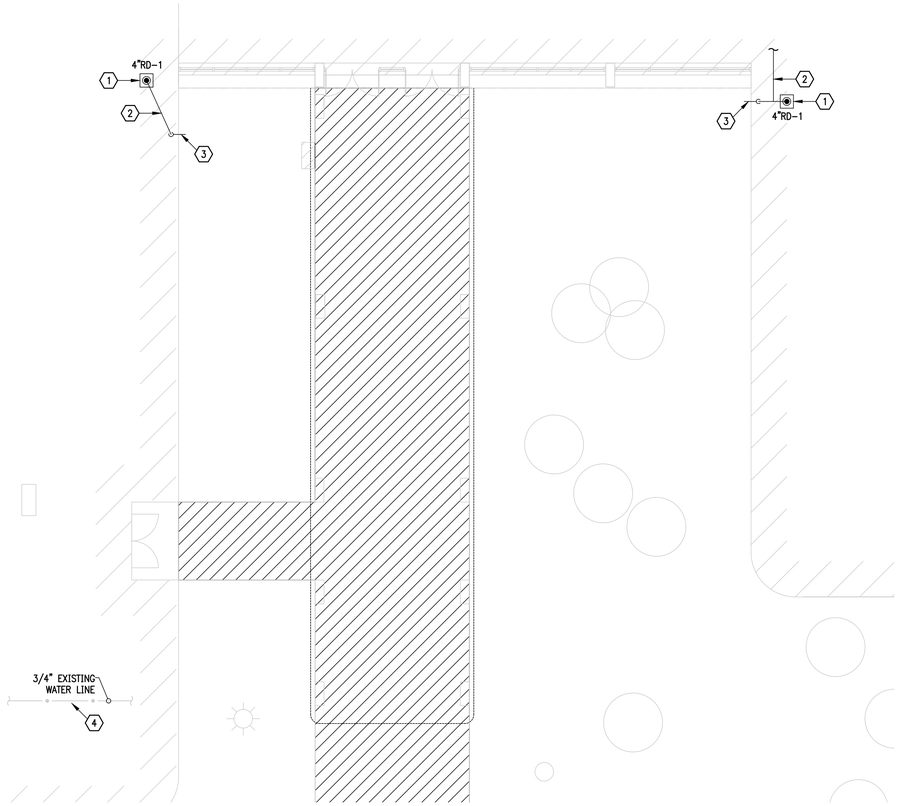

01 SAN BENITO HIGH SCHOOL DEMOLITION ROOF PLAN
SCALE: 1/8"=1'-0"

NORTH

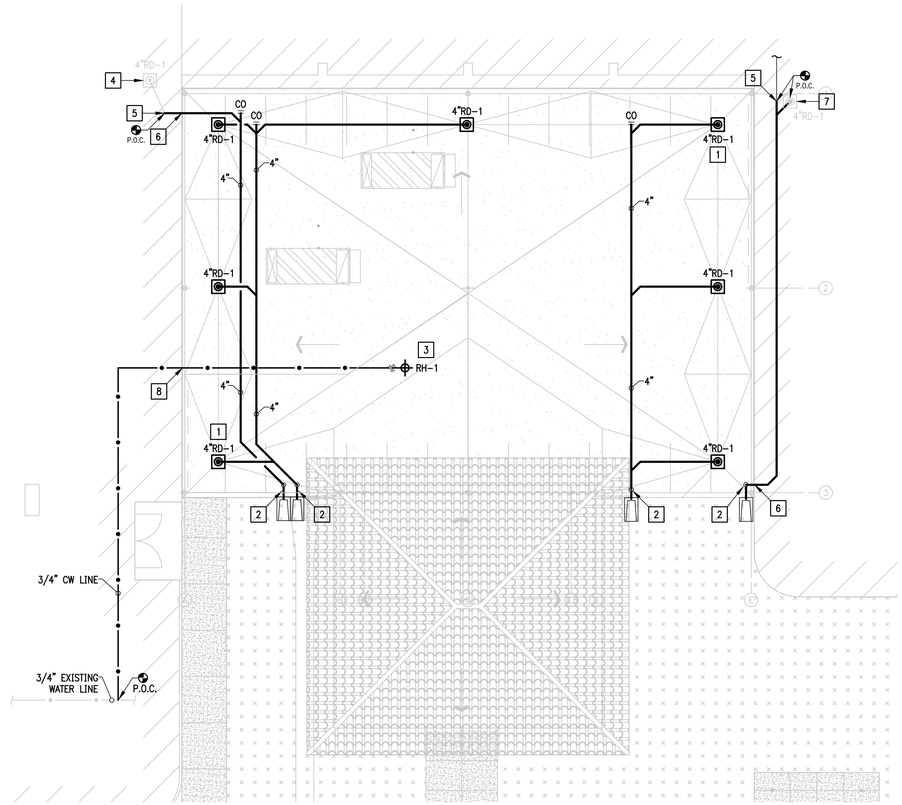

02 SAN BENITO HIGH SCHOOL NEW ROOF PLAN
SCALE: 1/8"=1'-0"

NORTH

GENERAL NOTES:

1. ALL HORIZONTAL LEADERS TO BE A MINIMUM OF 1/8" PER FOOT SLOPE.
2. ALL VERTICAL LEADER LINES DOWN AND CONCEALED IN PLUMBING CHASE UNLESS OTHERWISE NOTED. REFER TO DRAWINGS.
3. COORDINATE ROOF DRAIN PIPING WITH GENERAL CONTRACTOR AND HVAC CONTRACTOR.
4. PROVIDE INSULATION ON ALL ABOVE GROUND STORM LINES. REFER TO SPECIFICATIONS FOR DETAILS.
5. STORM DRAIN PIPING AND SEWER PIPING SHOWN ON THIS PLAN TO BE INSTALLED UNDER THE ROOF.
6. SECONDARY STORM DRAINAGE SYSTEM BY ARCHITECTURAL VIA SCUPPERS, REFER TO ARCHITECTURAL DRAWINGS FOR MORE INFORMATION.

DEMOLITION KEYED NOTES:

1. APPROXIMATE LOCATION OF EXISTING ROOF DRAIN. SEE NEW ROOF PLAN.
2. APPROXIMATE LOCATION OF EXISTING STORM DRAIN PIPING. EXISTING STORM DRAIN PIPING TO BE REROUTED. SEE NEW ROOF PLAN.
3. APPROXIMATE LOCATION OF EXISTING ROOF DRAIN DISCHARGE. EXISTING ROOF DRAIN DISCHARDE TO BE RELOCATED. SEE NEW ROOF PLAN.
4. APPROXIMATE LOCATION OF EXISTING 3/4" WATER LINE RUNNING INSIDE THE BUILDING ABOVE CEILING SPACE.

KEYED NOTES:

1. PROVIDE ROOF DRAIN AS SCHEDULED. SEE ASSOCIATED DETAILS ON THIS SHEET. (TYPICAL)
2. DROP STORM DRAIN PIPING IN WALL CAVITY. REFER TO ARCHITECTURAL SHEET AND COORDINATE INSTALLATION WITH GENERAL CONTRACTOR. SEE ASSOCIATED DETAILS ON THIS SHEET. (TYPICAL)
3. PROVIDE ROOF HYDRANT AS SCHEDULED. SEE ASSOCIATED DETAIL ON THIS SHEET. (TYPICAL)
4. APPROXIMATE LOCATION OF 4" EXISTING ROOF DRAIN SERVING LIBRARY BUILDING. FIELD VERIFY EXISTING ROOF DRAIN AND REROUTE STORM DRAIN PIPING.
5. CONNECT EXISTING STORM DRAIN PIPING TO NEW STORM DRAIN PIPING AT THIS APPROXIMATE LOCATION AND REROUTE.
6. NEW STORM DRAIN PIPING TO PENETRATE THROUGH EXISTING BUILDING WALL AT THIS APPROXIMATE LOCATION INTO NEW BUILDING CEILING SPACE.
7. APPROXIMATE LOCATION OF 4" EXISTING ROOF DRAIN SERVING EXISTING BUILDING. FIELD VERIFY EXISTING ROOF DRAIN AND REROUTE STORM DRAIN PIPING.
8. NEW DOMESTIC COLD WATER LINE TO PENETRATE THROUGH EXISTING BUILDING WALL AT THIS APPROXIMATE LOCATION INTO NEW BUILDING CEILING SPACE.

PLUMBING FIXTURE SCHEDULE

MARK	MANUFACTURER & MODEL NUMBER	DESCRIPTION	CONNECTIONS					REMARKS
			WASTE	VENT	CW	HW	NOTES	
RD-1	MIFAB 1200-W	15" DIA. LARGE SUMP ROOF DRAIN, GALV. SUMP RECEIVER CAST IRON DRAIN BODY, C.I. WATERPROOFING MEMBRANE CLAMP RING WITH INTEGRAL GRAVEL STOP,OVERFLOW STANDPIPE, SELF-LOCKING POLYETHYLENE DOME STRAINER.	SEE PLANS	-	-	-	-	
RH-1	JAY R. SMITH 5906	NON-FREEZE ROOF HYDRANT WITH GALV. CASING AND ADJUSTABLE FLOW WHEEL LOCK HANDLE WITH DECK FLANGE AND UNDEER DECK CLAMP.	-	-	3/4"	-	-	

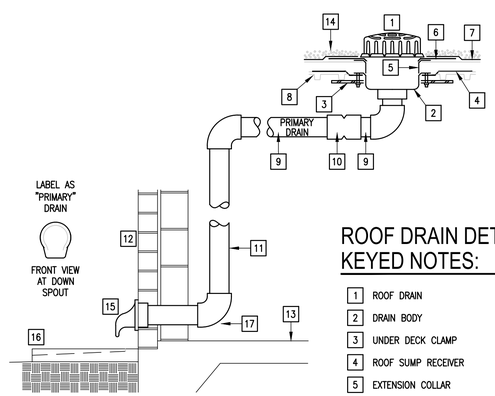

ROOF DRAIN DETAIL KEYED NOTES:

1. ROOF DRAIN
2. DRAIN BODY
3. UNDER DECK CLAMP
4. ROOF SUMP RECEIVER
5. EXTENSION COLLAR
6. 4# LEAD FLASHING–EXTEND MINIMUM 12" FROM DRAIN BODY
7. COUNTER FLASHING
8. ROOF DECK
9. MINIMUM 1/4" PER FEET SLOPE ON HORIZONTAL RUNS
10. RUBBER "O" RINGS TYPE EXPANSION COUPLING WITHIN 4 FEET OF EACH ROOF DRAIN.
11. RAIN WATER CONDUCTOR INSIDE WALL CAVITY.
12. WALL
13. FLOOR
14. ROOF
15. PROVIDE DOWNSPOUT NOZZLE EQUAL TO JOSAM 2510.
16. SPLASH BLOCK (GENERAL CONTRACTOR)
17. FILL BLOCK WITH CONCRETE AT ELBOW AREA

03 RD-1 PRIMARY ROOF DRAIN DETAIL
SCALE: NOT TO SCALE

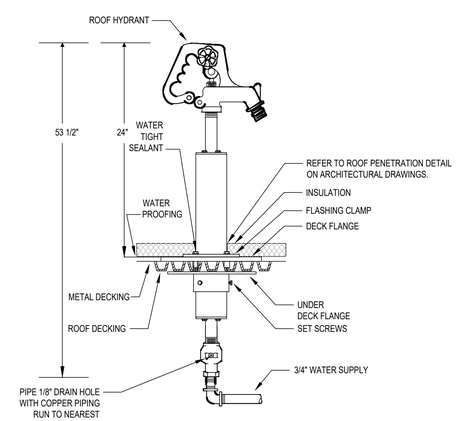

04 (RH-1) ROOF HYDRANT DETAIL
SCALE: NOT TO SCALE

ethos engineering
119 W. VAN BUREN AVE. STE.101
HARLINGEN, TX
PHONE: 956-230-3435
TEXAS REGISTERED
ENGINEERING FIRM
F-15988

No.	REVISIONS	BY

GMS ARCHITECTS
1150 paredes line rd.
brownsville
texas 78526
(956) 546-0110
fax (956) 546-0196

SAN BENITO CISD
ADDITIONS AND RENOVATIONS AT SAN BENITO HS AND SULLIVAN ELEMENTARY
SAN BENITO TEXAS

BID PACKAGE "A"
SAN BENITO HIGH SCHOOL

STATE OF TEXAS
CESAR A. GONZALEZ
108611
LICENSED
PROFESSIONAL ENGINEER
8.2.2019

COPYRIGHT 2019
GOMEZ MENDEZ SAENZ INC.
ARCHITECTS-PLANNERS

DATE	AUGUST 2, 2019
SCALE	As Shown
DRAWN	ETHOS
JOB	19V32
SHEET	AP2.01

4.2 SPACE ALLOWANCES AND REACH RANGES

TAS SECTIONS 4.2.1 – WHEELCHAIR PASSAGE WIDTH

A. The minimum clear width for single wheelchair passage shall be 32" at a point and 36" continuously

TAS SECTIONS 4.2.2 – WIDTH FOR WHEELCHAIR PASSING

A. The minimum clear width for two wheelchairs to pass is 60"

TAS SECTIONS 4.2.4.1 – SIZE AND APPROACH

A. Minimum clear floor space for a wheelchair and occupant shall be 30" wide x 48" long. Clear floor space shall be centered on the element it serves.

4.3 ACCESSIBLE ROUTE

TAS SECTIONS 4.3.2 – LOCATION

A. At least one accessible route shall be provided from public transportation stops, accessible parking and loading zones, and public streets or sidewalks to the accessible building entrance.

TAS SECTIONS 4.3.3 – WIDTH

A. The minimum clear width of an accessible route shall be 36" except at doors.

TAS SECTIONS 4.3.4 – PASSING SPACE

A. If an accessible route is less than 60" in width, then passing spaces of at least 60"x60" shall be provided at 200' max. spacing.

TAS SECTONS 4.3.5 – HEAD ROOM

A. Accessible routes shall have 80" min. clear head room.

TAS SECTIONS 4.3.7 – SLOPE

A. Running slope shall not exceed 1:20. (If slope exceeds 1:20, refer to section 4.8)

B. Cross slope shall not exceed 1:50

4.4 PROTRUDING OBJECTS (REFERENCE DETAIL 4.4.1 & 4.4.2)

TAS SECTIONS 4.4.1 – GENERAL

A. Objects projecting from walls (for example, telephones) with their leading edges between 27"–80" above the finished floor shall protrude no more than 4" into walks, halls, corridors, passageways, or aisles. Objects mounted with their leading edges at or below 27" above the finished floor may protrude any amount. Free–standing objects mounted on posts or pylons may overhang 12" maximum from 27"–80" above the ground or finished floor. Protruding objects shall not reduce the clear width of an accessible route or maneuvering space.

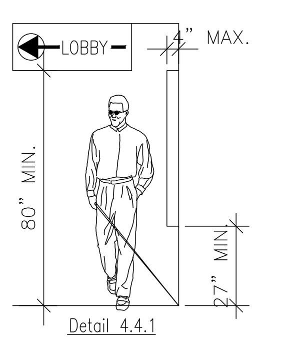

Detail 4.4.1

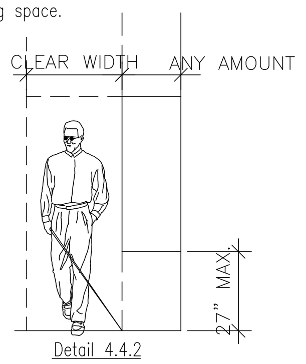

Detail 4.4.2

4.5 GROUND AND FLOOR SURFACES

TAS SECTIONS 4.5.2 – CHANGES IN LEVEL (REFERENCE DETAIL. 5.1)

A. Changes in level up to 1/4" may be verticle and without edge treatment

B. Changes in level between 1/4" and 1/2" shall be beveled with a slope no greater than 1:2.

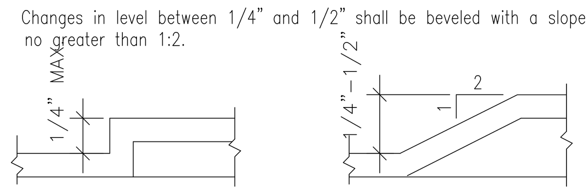

Detail 5.1

TAS SECTIONS 4.5.3 – CARPET

A. Carpet provided on a floor surface shall be securely attached; have a firm pad or backing, or no pad; and have a level loop, textured loop, level cut pile, or level cut/uncut pile texture. Maximum pile thickness shall be 1/2". Exposed edges of carpet shall be fastened to floor surfaces and have trim along the exposed edges.

TAS SECTIONS 4.5.4 – GRATINGS

A. If gratings are located in walking surfaces or along accessible routes, then they shall have spaces no greater than 1/2" wide in one direction.

B. If gratings have elongated openings, then they shall be placed so that the long dimension is perpendicular to the dominant direction of travel.

4.6 PARKING AND PASSENGER LOADING ZONES

TAS SECTIONS 4.6.3 – PARKING SPACES

A. Accessible parking shall be at least 96" wide.

B. Parking access aisles shall be 60" wide.
Van accessible access aisles shal be 96" wide.

C. Surface slope shall not exceed 1:50 in all directions
(Note : no built up curb ramp may be located in an accessible parking access aisle.)

TAS SECTIONS 4.6.4 – SIGNAGE

A. Each accessible parking space must have individual verticallly mounted or suspended sign. Required van accessible spaces must be designatred.

A. Characters and symbols on such signs shall be located 60" minimum above the ground.

B. Signage located within an accessible route shall be located 80" min. above the walking surface.

TAS SECTIONS 4.6.5 – VERTICAL CLEARANCE

A. Provide minimum verticle clearance of 114" at accessible passenger loading zones and along at least one vehicle access route from site entrances and exits.

TAS SECTIONS 4.6.6 – PASSENGER LOADING ZONE

A. Passenger loading zones shall provide an access aisle at least 60" wide and 20 ft long adjacent and parallel to the vehicle pull–up space. If there are curbs between the access aisle and the vehicle pull–up space, then a curb ramp complying with 4.7 shall be provided. Vehicle standing spaces and access aisles shall be level with surface slopes not exceeding 1:50 in all directions.

4.7 CURB RAMPS

TAS SECTIONS 4.7.2 – SLOPE (REFERENCE DETAIL 4.7)

A. Slopes of curb ramps shall comply with 4.8.2.

B. Maximum slopes of adjoining gutters, road surface immediately adjacent to the curb ramp, or accessible route shall not exceed 1:20.

TAS SECTIONS 4.7.3 – WIDTH (REFERENCE DETAIL 4.7)

A. The minimum width of a curb ramp shall be 36", exclusive of flared sides.

TAS SECTIONS 4.7.5 – SIDES OF CURB RAMPS (REFERENCE DETAIL 4.7)

A. If a curb ramp is located where pedestrians must walk across the ramp or where it is not protected by handrails or guardrails, it shall have flared sides; the maximum slope of the flare shall be 1:10

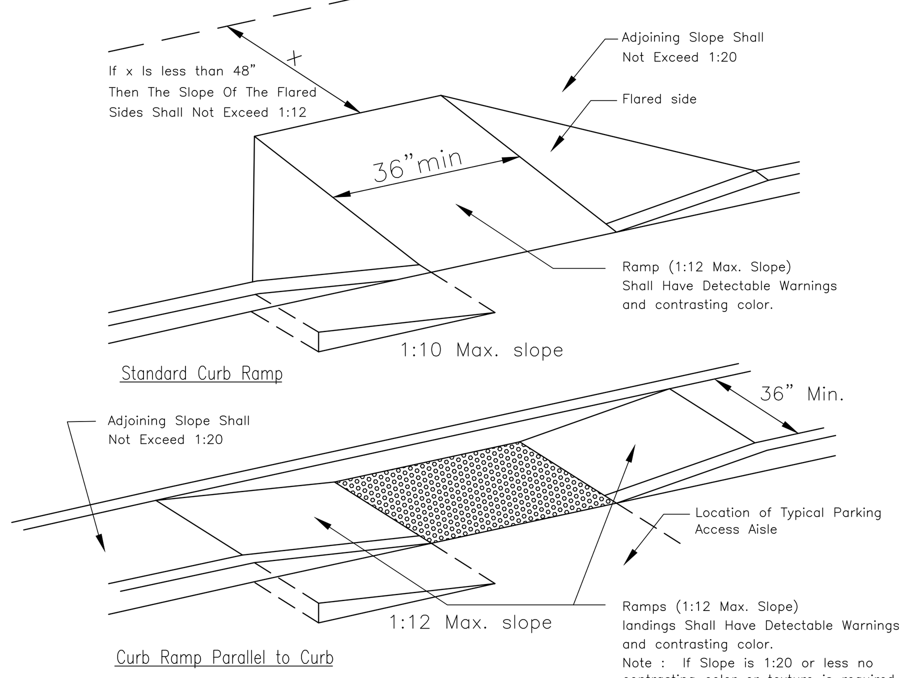

Detail 4.7

TAS SECTIONS 4.7.10 – DIAGONAL CURB RAMPS

A. If diagonal curb ramps have returned curbs or other well–defined edges, such edges shall be parallel to the direction of pedestrian flow. The bottom of diagonal curb ramps shall have 48" minimum clear space. If diagonal curb ramps are provided at marked crossings, the 48" clear space shall be within the markings. If diagonal curb ramps have flared sides, they shall also have at least a 24" long segment of straight curb located on each side of the curb ramp and within the marked crossing.

TAS SECTIONS 4.7.11 – ISLANDS

A. Any raised islands in crossings shall be cut through level with the street or curb ramps at both sides and a level area at least 48" long between the curb ramps in the part of the island intersected by the crossings.

4.8 RAMPS

TAS SECTIONS 4.8.1 – GENERAL

A. Any part of an accessible route with a slope greater than 1:20 shall be considered a ramp and shall comply with 4.8

TAS SECTIONS 4.8.2 – SLOPE AND RISE

A. The least possible slope shall be used for any ramp. The maximum slope of a ramp in new construction shall be 1:12. The maximum rise for any run shall be 30".

TAS SECTIONS 4.8.3 – CLEAR WIDTH

A. The minimum clear width of a ramp 30 ft or less in length shall be 36". Ramps more than 30 ft. in length shall have a minimum clear width of 44".

TAS SECTION 4.8.4 – LANDINGS

A. Level landings required at top and bottom of each run, with the following features:
1. Minimum Width: Equal to width of ramp
2. Length: Minumum 60" clear
3. At change of direction landing shal be 60" x 60" min.

TAS SECTION 4.8.5 – HANDRAILS

A. Handrails are required at all ramps with > 6" rise.

B. Height: 34–38" above ramp surface

C. The clear space between the handrail and the wall shall be 1–1/2".

TAS SECTIONS 4.8.7 – EDGE PROTECTION

A. Ramps and landings with drop offs shall have curbs, walls, railings, or projecting surfaces that prevent slipping off the ramp. Curbs shall be a minimum of 2" high.

4.9 STAIRS

TAS SECTIONS 4.9.2 – TREADS AND RISERS

A. All steps on a flight of stairs shall have uniform riser heights and tread widths
1. Minimum tread depth shall be 11", measured from riser to riser (not including nosing)
2. Open risers are not permitted

TAS SECTION 4.9.4 – HANDRAILS

A. Non–continuous handrails shall extend 12" beyond the top riser and 12" plus the width of one tread beyond the bottom riser. At the top, the extension shall be parallel to the floor. At the bottom, the handrail shall continue to slope for a distance of one tread width (11"); the remaining extension shall be horizontal.

B. Height: 34" – 38", measured from the stair nosing.

4.10 ELEVATORS

TAS SECTIONS 4.10.3 – HALL CALL BUTTONS

A. Shall be centered 42" above floor

TAS SECTIONS 4.10.4 – HALL LANTERNS

A. Visible signals shall have the following features:
1. Fixtures shall be mounted with centerline at least 72" above the lobby floor
2. Visual elements shall be at least 2–1/2" in the smallest dimension

TAS SECTIONS 4.10.5 – RAISED AND BRAILLE CHARACTERS ON HOISTWAY ENTRANCES

A. All elevator hoistway entrances shall have raised and Braille floor no. designations provided on both jambs. Centerline of the characters shall be 60" above the floor. Characters shall be 2" high.

TAS SECTIONS 4.10.6 – DOOR PROTECTIVE AND REOPENING DEVICE

A. Elevator doors shall open and close automatically. They shall be provided with a reopening device that will stop and reopen a car door and hoistway door automatically if the door becomes obstructed by an object or person.

TAS SECTIONS 4.10.12 – CAR CONTROLS

A. All floor buttons shall be:
1. All control buttons shall be at least 3/4" in their smallest dim. They shall be flush or raised.
2. All control buttons shall be designated by Braille and by raised standard alphabet characters for letters, arabic characters for numerals. The call button for the main entry floor shall be designated by a raised star at the left of the floor designation.
3. Maximum 54" above floor where side approach is provided
4. Maximum 48" where forward approach is provided

B. Emergency Controls:
1. Shall have centerlines 35" minimum above floor
2. Shall be grouped at bottom of panel

C. The emergency communication system shall not require voice communication.

4.11 PLATFORM LIFTS

NOTE : REQUIRES A VARIANCE FROM THE T.D.L.R. TO USE IN LIEU OF AN ELEVATOR

TAS SECTIONS 4.11.2, 4.27.3 – OTHER REQUIREMENTS
CONTROLS AND OPERATING SYSTEMS

A. Heights permitted:
Controls and operating mechanisms shall be located for either a forward or side approach from any direction of travel. They shall be located 28" min. and 48" maximum above the floor. They shall be operable with one hand. There shall be at least one handrail complying with 4.26. Wheelstops and quardrails shall be provided where necessary.

4.13 DOORS

TAS SECTION 4.13.4 – DOUBLE – LEAF DOORWAYS

A. Doorways with two independently operated leaves shall have at least one active leaf that meets the requirements in 4.13.5 and 4.13.6.

TAS SECTION 4.13.5 – CLEAR WIDTH

A. Doorways shall provide a clear opening of 32" minimum, with the door open 90°.
1. Clear opening shall be measured between the face of the door and opposite stop.
2. Openings more than 24" in depth shall provide a clear opening of 36" minimum.
Exception: Doors not requiring full user passage, such as shallow closets, shall have a clear opening of 20" minimum.

TAS SECTION 4.13.6 – MANEUVERING CLEARANCES AT DOORS

Provide level (1:50 max. slope) and clear maueuvering area at doors as follows:

A. Front approach pull side – 60" min. width & 18" min. beside strike edge
Front approach push side – 48" min width & 0" beside strike edge
(12" @ strike if door has both a closer and a latch)

B. Hinge side approach pull side – 60" min. width; 36" min. beside strike edge
or – 54" min. width; 42" min. beside strike edge
Hinge side approach push side – 42" min. width & 18" min. bside hinge edge
(48"min. width if door has both a closer and a latch)

C. Latch side approach pull side – 48" min. width and 24" min. beside strike edge
(54"min. width if door has a closer)
Latch side approach push side – 42" min. width and 24" min. beside strike edge
(48"min. width if door has a closer)

TAS SECTION 4.13.8 – THRESHOLDS AT DOORWAYS

A. Maximum threshold height: 1/2" (3/4" at exterior sliding doors). Raised thresholds and floor level changes shall be beveled with a slope no greater than 1:2.

TAS SECTION 4.13.9 – DOOR HARDWARE

A. Handles, pulls, latches, locks, and other operating devices shall have a shape that is easy to grasp with one hand and does not require tight grasping, tight pinching, or twisting of the wrist to operate.
1. Lever–operated mechanisms, push–type mechanisms, and U–shaped handles are acceptable designs.
2. When sliding doors are fully open, operating hardware shall be exposed and usable from both sides.
3. Hardware required for accessibel door passage shall be mounted no higher than 48" above finished floor.

TAS SECTION 4.13.10 – DOOR CLOSERS

A. If a door has a closer, then the sweep period of the closer shall be adjusted so that from an open position of 70°, the door will take at least 3 seconds to move to a point 3" from the latch, measured to the leading edge of the door.

TAS SECTION 4.13.11 – DOOR OPENING FORCE

A. The maximum force for pushing or pulling open a door shall be as follows:
1. Fire doors shall have the minimum opening force allowable by the appropriate administrative authority.
2. Other doors
a. Exterior hinged doors: no requirement.
b. Interior hinged doors: 5.0 lbf.
c. Sliding or folding doors: 5.0 lbf.
These forces do not apply to the force required to retract latch bolts or disengage othe devices that may hold the door in a closed position.

4.15 DRINKING FOUNTAINS

TAS SECTION 4.15.2 – SPOUT HEIGHT (REFERENCE DETAIL 4.15 for accessible unit)

A. Accessible spouts shall be no higher than 36", measured from the floor or ground surface to the spout outlet.

B. In addition to accessible unit, at least one drinking fountain shall be at standard height (may be "high/low" type if located in one location).

TAS SECTION 4.15.3 – SPOUT LOCATION

A. Spouts shall be located at the front of the unit and shall direct the water flow in a trajectory that is parallel or nearly parallel to the front of the unit.
1. The spout shall provide a flow of water at least 4" high.
2. If the fountain has a round or oval bowl, the spout must be positioned so the flow of water is within 3" of the front edge of the fountain.

TAS SECTION 4.15.4 – CONTROLS

A. Unit controls shall be front mounted or side mounted near the front edge.

TAS SECTION 4.15.5 – CLEARANCES (REFERENCE DETAIL 4.15).

A. Wall and post mounted cantilever fountains shall have clear knee space as follows:
1. Minimum 27" high (from apron bottom to floor) minimum 30" wide, and 17" – 19" deep.
2. A minimum 30" by 48" clear floor space allowing a forward approach to the unit shall be provided.

B. Free standing or built–in units not having a clear knee space shall have a minimum 30" by 48" clear floor space allowing a parallel approach to the unit.

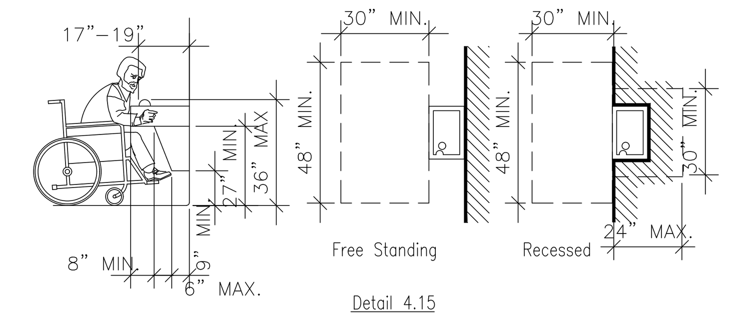

Detail 4.15

4.16 WATER CLOSETS

TAS SECTION 4.16.2 – CLEAR FLOOR SPACE

A. Clear floor space for water closets not in stalls shall be provided as follows:
Front approach – 48" min. wide x 66" min. long
Side approach – 56" min. to front of toilet x 48" min. wide
Both approach – 60" min. wide x 56" min. long (Reference Detail 4.16)

B. No doorswings are allowed in clear floor area.

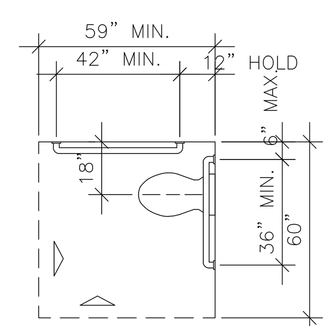

Detail 4.16

TAS SECTION 4.16.3 – HEIGHT (REFERENCE DETAIL 4.16.2)

A. The height to the top of the toilet seat shall be 17" – 19" above floor.
1. Seats shall not be sprung to return to a lifted position.

TAS SECTIONS 4.16.4, 4.26 – GRAB BARS (REFERENCE DETAILS 4.16.1, 4.16.2 & 4.16.3)

A. For water closets not located in toilet stalls, the following grab bars shall be provided, 33" – 36" above the finish floor:
1. Side wall: 42" long minimum, hold 12" min. from back wall.
2. Back wall: 36" long minimum, 12" minimum each side of water closet centerline.

Refer to 4.26 Grab Bars for size and structural elements.

TAS SECTIONS 4.16.5, 4.27.4 – FLUSH CONTROLS (REFERENCE DETAIL 4.16.3)

A. Controls shall be 44" maximum above the finish floor.
1. Lever controls or flush valves shall be mounted on the wide side of toilet areas.
2. Controls shall be hand operated or automatic.
3. Controls shall be operable with one hand and shall not require tight grasping, pinching, or twisting of the wrist.
4. The force required to activate controls shall be no greater than 5lbf.

TAS SECTION 4.16.6 – DISPENSERS (REFERENCE DETAIL 4.16.2)

A. Toilet paper dispensers shall be installed on the side wall, a minimum 19" above the floor, and a maximum 36" from the rear wall.
1. Dispensers that control delivery or do not permit continuous paper flow shall not be used.

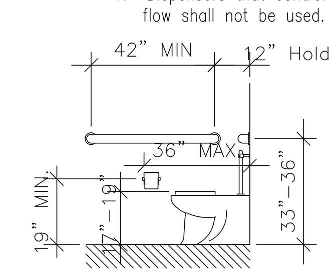

Detail 4.16.2

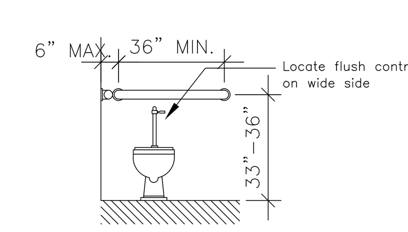

Detail 4.16.3

4.17 TOILET STALLS

TAS SECTION 4.22.4 – WHERE APPLICABLE

A. If toilet stalls are provided in a toilet room or bathroom, then at least one shall be a "standard" accessible toilet stall (for wheelchair users) complying with this section. (REFERENCE DETAIL 4.17.1)

B. If 6 or more toilet stalls are provided in a toilet room or bathroom in addition to the 'standard' accessible stall required; an additional 'alternate A' accessible stall 36" wide (for ambulatory persons with disabilities) complying with this section shall be provided. (REFERENCE DETAIL 4.17.2)

C. Alterations/Existing Conditions: In alteration work. where provision of a 'standard' accessible stall is technically infeasible, or where plumbing code requirements prevent combining existing stalls to provide space, either 'alternate' stall (A or B) complying with this section may be provided in lieu of the standard stall. (Note :requires a variance from T.D.L.R.)

TAS SECTION 4.17.3 – SIZE AND ARRANGEMENT (REFERENCE DETAIL 4.17)

A. Toilet stalls may be arranged to provide either a left or a right handed approach. Accessible toilet stalls shall have the following dimensions:
1. 'Standard' Accessible Stall
60" minimum width.
59" minimum depth, with floor mounted water closet
56" minimum depth, with wall mounted water closet
Door: outward swinging (if door swings into stall, depth shall be increased by 36". Stall doors must have 18" on pull strike jamb.
2. 'Alternate A' Accessible Stall (required when more than 6 stalls provided, permitted in lieu of standard stall only with a variance from T.D.L.R.)
36" width – hold this dim.
69" minimum depth, with floor mounted water closet.
66" minimum depth with wall mounted water closet
Door: outward swinging.
3. 'Alternate B' Accessible Stall (permitted in lieu of standard stall only with variance from T.D.L.R.)
48" minimum width.
54" minimum depth.
Door : outward swinging.

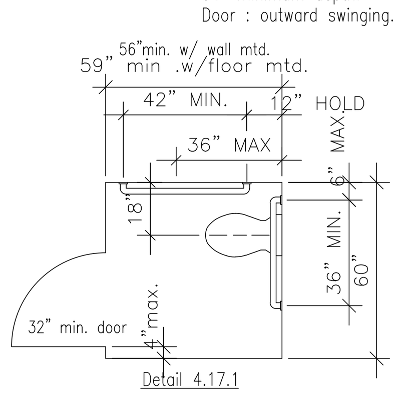

Detail 4.17.1

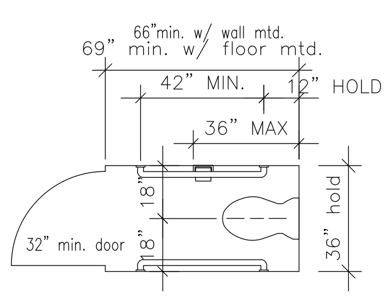

Detail 4.17.2

TAS SECTION 4.17.4 – TOE CLEARANCES

A. In 'Standard' accessible stalls, the front partition and at least one side partition shall provide a toe clearance of at least 9" above the floor.

B. If the depth of the stall is greater than 60", the toe clearance is not required.

TAS SECTION 4.17.5 – DOORS

A. Toilet stall doors, including hardware, shall comply with 4.13 DOORS

B. If toilet stall approach is from the latch side of the stall door, clearance between the door side of the stall and any obstruction shall be 42" minimum. (This is an exception from typical door maneuvering clearances)

TAS SECTION 4.17.6 – GRAB BARS (REFERENCE DETAILS 4.16.2, 4.16.3, 4.17.1 & 4.17.2)

A. Grab Bars shall be mounted 33" – 36" above the floor.

Refer to 4.26 Grab Bars for size and structural requirements.

4.18 URINALS

TAS SECTION 4.18.2 – HEIGHT (REFERENCE DETAIL 12.3.1)

A. Urinals shall be stall–type or wallhung with a tapered, elongated rim at 17" maximum above the finished floor.
The rim shall extend a minimum of 14" from the wall.

TAS SECTION 4.18.3 – CLEAR FLOOR SPACE (REFERENCE DETAIL 4.18.1)

A. A clear floor space 30" wide by 48" deep minimum shall be provided in front of urinal to allow forward approach.
1. This space shall adjoin or overlap an accessible route.
2. Urinal shield that do not extend beyond the front edge of the urinal rim may be provided with 29" clearence between them.
3. Urinals installed in alcoves deeper than 24" require a maneuvering area of at least 36" minimum wide, centered on fixture.

TAS SECTION 4.18.4 – FLUSH CONTROLS (REFERENCE DETAIL 4.18.2)

A. Controls shall be 44" maximum above the finished floor.
1. Controls shall be hand operated or automatic.
2. Controls shall be operable with one hand and shall not require tight grasping, pinching, or twisting of the wrist.
3. The force required to activate controls shall be no greater than 5 lfb.

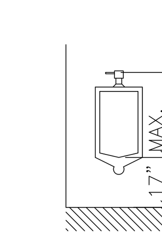

Detail 4.18.1

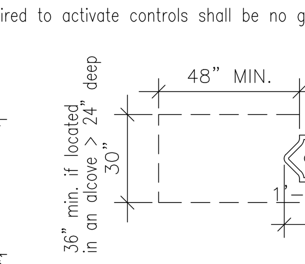

Detail 4.18.2

4.19 LAVATORIES & MIRRORS

TAS SECTION 4.19.2 – HEIGHT & CLEARANCES (REFERENCE DETAIL 4.19.1 & 4.19.2)

A. Lavatories shall be mounted with the rim or counter surface no higher than 34" above the finished floor.
1. Lavatories shall extend 17" minimum from the wall.
2. Clearance of 29" minimum shall be provided from the finished floor to bottom of apron.
3. Knee clearance of 27" minimum shall extend 8" minimum under the edge of the lavatory.
4. Toe clearance of 9" minimum shall be provided for the full depth of the lavatory.

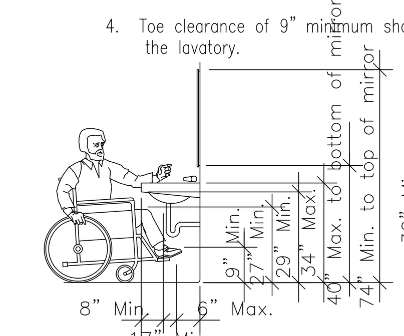

Detail 4.19.1

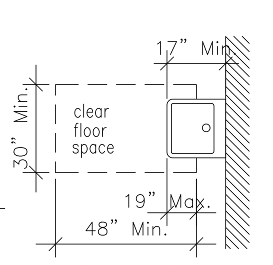

Detail 4.19.2

No.	REVISIONS	BY

GMS ARCHITECTS
1150 paredes line rd.
brownsville
texas 78526
(956) 546-0110
fax (956) 546-0196

RFCSP-0819-NEHSSL

TEXAS

SAN BENITO CISD
ADDITIONS AND RENOVATIONS AT SAN BENITO HS AND SULLIVAN ELEMENTARY
RFCSP-0819-NEHSSL

SAN BENITO

BID PACKAGE "B"
SAN BENITO SULLIVAN

COPYRIGHT 2019
GOMEZ MENDEZ SAENZ INC.
ARCHITECTS-PLANNERS

DATE	MAY, 2019
SCALE	As Shown
DRAWN	R GOMEZ IO
JOB	S5001119
SHEET	G1.00

C:\Users\Station 9\Dropbox\S5001119 SBISD HS & Sullivan\Sullivan\X Sullivan ref-master plan.dwg

TAS SECTION 4.19.4 – EXPOSED PIPES AND SURFACES

A. Hot water and drain pipes under lavatories shall be insulated or otherwise configured to protect against contact.

B. There shall be no sharp or abrasive surfaces under lavatories.

TAS SECTIONS 4.19.5, 4.27.4 – FAUCETS

A. Controls shall be operable with one hand and shall not require tight grasping, pinching, or twisting of the wrist.

B. The force required to activate controls shall be no greater than 5 lbf.

C. Lever-operated, push-type, and electronically controlled mechanisms are examples of acceptable designs.

D. If self-closing valves are used the faucet shall remain open for at least 10 seconds.

TAS SECTION 4.19.6 – MIRRORS (REFERENCE DETAIL 4.19.1)

A. Mirrors shall be mounted with the bottom edge of the reflecting surface 40" maximum above the finished floor.

B. The top edge of the reflecting surface must be at least 74" AFF.

4.20 BATHTUBS

TAS SECTION 4.20.2 – FLOOR SPACE

A. Clear floor space shall be provided in front of bathtubs as follows:
30" wide x 60" long beside the bathtub for side approach
48" wide x 60" long beside the bathtub for front approach

with seat at head of tub – 30" wide x 75" long beside tub

TAS SECTION 4.20.3 – SEAT

A. An in-tub seat or a seat at the head end of the tub shall be provided. Seats shall be mounted securely and shall not slip during use.

TAS SECTIONS 4.20.4 – GRAB BARS

A. Heights permitted:

1. With in Tub Seat:
Foot Control wall: 24" long minimum, from outside wall, 33–36" above floor
Back wall: 2 bars, 24" long minimum, 12" maximum from foot wall, 24" maximum from head wall; one 33–36" above floor, one 9" above the tub
Head wall: 12" minimum, from outside wall, 33–36" above floor

2. With Seat at Head of Tub:
Control wall: 24" long minimum, from outside wall, 33–36" above floor
Back wall: 2 bars, 48" long minimum, 12" maximum from foot end, 15" maximum from head end; one 33–36" above floor, one 9" above the tub
Head wall: none

TAS SECTION 4.20.5

A. Controls must be located up front to the open side of tub

TAS SECTION 4.20.6 – SHOWER UNIT

A. A shower spray unit with a hose at least 60" long shall be provided that they can be used both as fixed and hand held.

4.21 SHOWER STALLS

TAS SECTION 4.21.2 – SIZE AND CLEARANCES

A. Shower stalls shall be either 36"x36" clear inside dimension (hold) at transfer type or 30" min. x 60" min. clear inside dimension at roll in type.

TAS SECTIONS 4.21.3 – SEAT

A. Seat is required in 36"x 36" stalls, and shall have the following features:

1. Shall be 17"–19" above bathroom floor
2. Shall extend the full depth of the stall
3. Shall be located on the wall opposite control wall
4. Maximum space between wall and seat edge shall be 1–1/2"
5. Shall project 16" maximum into stall width, except at the rear 15" maximum of the stall, where the seat may project 23"
6. Where a seat is provided in a roll in type shower it must be the fold-up type.

TAS SECTIONS 4.21.4 – GRAB BARS

A. Grab bars shall be mounted 33–36" above floor

TAS SECTIONS 4.21.5 – CONTROLS

A. All shower controls shall be located 38" minimum and 48" maximum above the floor, up front on the open side.

TAS SECTIONS 4.21.6 – SHOWER UNIT

A. A shower spray unit with a hose at least 60" long that can be used both as a fixed shower head and as a hand held shower shall be provided. The mounting device shall comply with the requirements for Forward Reach.

TAS SECTIONS 4.21.7 – CURBS

A. If provided, curbs on transfer showers shall be no higher than 1/2" roll-in showers shall not have curbs

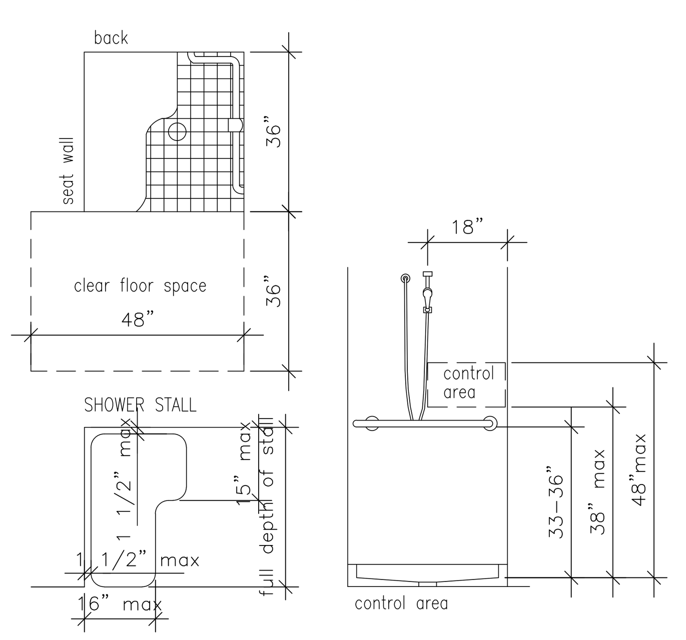

SHOWER SEAT DETAIL

4.22 TOILET ROOMS

TAS SECTIONS 4.22.2 – DOORS

A. All doors to accessible toilet rooms shall comply with 4.13. Doors shall not swing into clear floor space required for any fixture. Clear floor turning space may overlap door swings.

TAS SECTIONS 4.22.3 – CLEAR FLOOR SPACE

A. The accessible fixtures and controls required in 4.22.4, 4.22.5, 4.22.6 4.22.7 shall be on an accessible route. An unobstructed turning space complying with 4.2.3 shall be provided within an accessible toilet room. The clear floor space at fixtures and controls, the accessible route, and the turning space may overlap, however; the only turning space provided shall not be located within a stall.

TAS SECTIONS 4.22.4 – WATER CLOSETS

A. If toilet stalls are provided, then at least one shall be a standard toilet stall complying with 4.17; where 6 or more stalls are provided in addition to the stall complying with 4.17.3, at least one stall 36" wide with an outward swinging, self-closing door and parallel grab bars shall be provided. Water closets in such stalls shall comply with 4.16.

TAS SECTIONS 4.22.5 – URINALS

A. If urinals are provided, then at least one shall comply with 4.18.

TAS SECTIONS 4.22.6 – LAVATORIES AND MIRRORS

A. If lavatories and mirrors are provided, then at least one of each shall comply with 4.19. Accessible lavatories and mirrors shall not be located within toilet stalls unless other accessible lavatories and mirrors are provided in the toilet room.

TAS SECTIONS 4.22.7 – CONTROLS AND DISPENSERS

A. If controls, dispencers, receptacles, or other equipment are provided, then at least one of each shall be on an accessible route and shall comply with 4.27 – (Controls & Operating Mechanisms).

4.23 – BATHROOMS, BATHING FACILITIES, AND SHOWER ROOMS

TAS SECTION 4.23.8 – BATHING AND SHOWER FACILITIES

A. In addition to the requirements of 4.22. toilet rooms :
If tubs and showers are provided, then at least one accessible tub that complies with 4.20 or at least one accessible shower that complies with 4.21 shall be provided

4.24 – SINKS

TAS SECTION 4.24.2 – HEIGHT

A. Sinks shall be mounted with the rim or counter surface no higher than 34" above the finished floor.

TAS SECTIONS 4.24.3 – KNEE CLEARANCE

A. Knee clearance of 27" high minimum, 30" wide minimum, and 19" deep minimum shall be provided underneath sinks.

TAS SECTION 4.24.4 – DEPTH

A. Each sink shall be a maximum of 6-1/2" deep.

TAS SECTIONS 4.24.6 – EXPOSED PIPES AND SURFACES

A. Hot water and drain pipes under sinks shall be insulated or otherwise configured to protect against contact.

B. There shall be no sharp or abrasive surfaces under sinks.

TAS SECTIONS 4.24.7, 4.27.4 – FAUCETS

A. Controls shall be operable with one hand and shall not require tight grasping, pinching, or twisting of the wrist.

B. The force required to activate controls shall be no greater than 5 lbf.

C. Lever-operated, push-type, and electronically controlled mechanisms are examples of acceptable designs.

D. If self-closing valves are used the faucet shall remain open for at least 10 seconds.

4.25 – STORAGE

TAS SECTION 4.25.1 – DEPTH (REFERENCE DETAIL 4.25.1)

A. Storage areas may be 36" in depth or less. If more than 36" in depth then area must allow 60" diameter of clear floor space for turning.

TAS SECTION 4.25.2 – CLEAR FLOOR SPACE: (REFERENCE DETAIL 4.25.2)

TAS SECTION 4.25.3 – HEIGHT (REFERENCE DETAIL 14.3 AND 4.25.3 & 4.25.4)

A. Where a forward reach is required, accessible storage spaces shall be 48" maximum and 15" minimum above the floor. If the forward reach is over an obstruction (with knee space equal to or greater than reach distance) 20"–25" deep, the maximum height shall be 44"; if the obstruction is less than 20", maximum height shall be 48".

B. Where a side reach is provided, accessible storage spaces shall be 54" maximum and 9" minimum above the floor. Maximum height shall be 46" for side reach over an obstruction 34" maximum high and 24" maximum deep.

C. Clothes rods or shelves shall be a maximum 54" above floor where a side reach is required.

D. Where the distance from the wheelchair to the clothes rod or shelf exceeds 10" (as at closets with inaccessible doors) the following criteria shall be met:

1. Shelves: Reach: 21" maximum; height: 48" maximum, 9" minimum.

2. Clothes rods: reach 21" maximum; height: 48" maximum.

TAS SECTIONS 4.25.4, 4.27.4 – HARDWARE

A. Hardware for accessible storage facilities shall be operable with one hand and shall not require tight grasping, pinching, or tisting of the wrist.

B. The force required to activate the hardware shall be no greater than 5 lbf

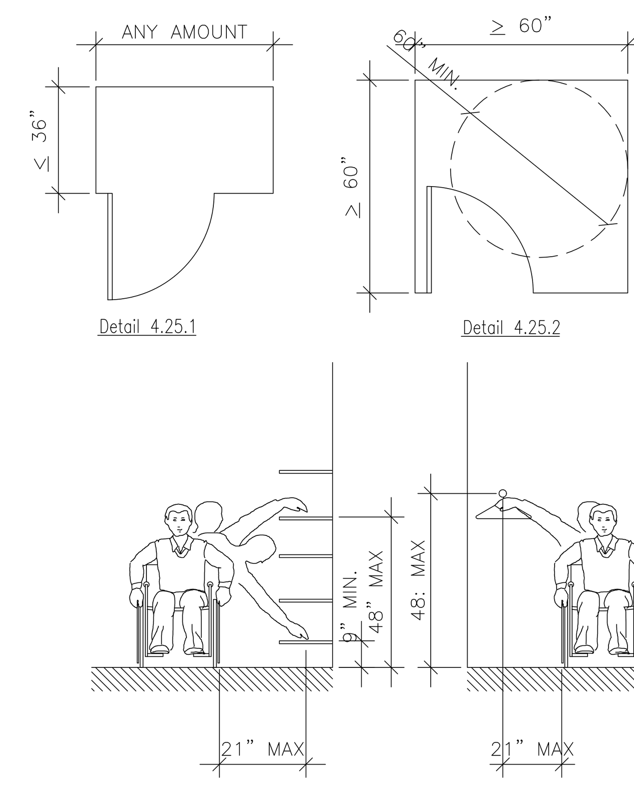

Detail 4.25.1 Detail 4.25.2 Detail 4.25.3 Detail 4.25.4

4.26 – GRAB BARS

TAS SECTION 4.26.2 – SIZE AND SPACING

A. Diameter or width of gripping surface shall be 1-1/4" to 1-1/2", or the shape shall provide an equivalent gripping surface.

1. The space between grab bars and adjacent walls shall be 1-1/2"

TAS SECTION 4.26.3 – STRUCTURAL STRENGTH

A. Grab bars and mounting devices shall meet the following requirements:

1. Bending stress induced by maximum bending moment from application of 250 lbf shall be less than allowable stress for material used.

2. Shear stress induced by application of 250 lbf shall be less than allowable shear stress for material used. If connection between grab bar and mounting bracket is considered to be fully restrained, then direct and torsional shear stresses shall be totaled for the combined shear stress, which shall not exceed the allowable shear stress.

3. Shear force induced in a fastener or mounting device from application of 250 lbf shall be less than allowable lateral load of either the fastener or mounting device or the supporting structure, whichever is the smaller allowable load.

4. Tensile force induced in a fastener by a direct tension force of 250 lbf plus the maximum moment from the application of 250 lbf shall be less than the allowable withdrawal load between the fastener and the supporting structure.

5. Grab bars shall not rotate within their fittings.

TAS SECTION 4.26.4 – ELIMINATING HAZARDS

A. Grab bars and adjacent wall surfaces shall be free of sharp or abrasive surfaces.

B. Edges shall have a radius of 1/8" minimum.

4.27 – CONTROLS AND OPERATING MECHANISMSS

TAS SECTION 4.27.3 – HEIGHT (REFERENCE DETAIL 4.30.3)

A. Front approach – 48" max. to 15" min.
Controls located in an alcove >24" deep must have 36" clear floor width.

B. Side approach – 54" max. to 9" min., except per below.

C. Electrical & communication system recepticals shall be mounted no less than 15" above the floor.

4.28 – ALARMS

TAS SECTION 4.28.1 – GENERAL

A. When required, visual alarms shall be provided in each of the following areas, as a minimum: restrooms and any other general usage areas (e.g., meeting rooms), hallways, lobbies, and any other area for common use.

TAS SECTION 4.28.2 – AUDIBLE ALARMS

A. If provided, audible alarms shall produce a sound that exceeds the prevailing equivalent sound level in the room or space by at least 15 dba or exceeds any maximum sound level with a duration of 60 seconds by 5 dba, whichever is louder.

B. Sound levels for alarm signals shall not exceed 120 dba.

TAS SECTION 4.28.3 – VISUAL ALARMS

A. Visual alarm signal appliances shall be integrated into the building or facility alarm system. If single station audible alarms are provided then single station visual alarm signals shall be provided.

Visual Alarm appliances shall have the following features:

1. The lamp shall be a xenon strobe type or equivalent.

2. The color shall be clear or nominal white (i.e. unfiltered or clear filtered white light).

3. The maximum pulse duration shall be two-tenths of one second with a maximum duty cycle of 40%. (The pulse duration is defined as the time interval between initial and final points of 10% of max signal)

4. The intensity shall be a minimum of 75 candela.

5. The flash rate shall be a minimum of 1 Hz and a maximum of 3 Hz

6. The appliance shall be placed 80" above the highest floor level within the space or 6" below the ceiling, whichever is lower.

7. In general, no place in any room or space shall be more than 50' from the signal (measured in a horizontal plane).

a. In large rooms and spaces exceeding 100' across, without obstructions 6' above the finished floor, such as auditoriums, devices may be place around the perimeter, spaced a maximum 100' apart, in lieu of suspending appliances from the ceiling.

8. No place in common corridors or hallways shall be more than 50' from the signal.

4.30 – SIGNAGE

TAS SECTIONS 4.1.2(7), 4.1.3(16)(a) – WHERE APPLICABLE

A. Signs which designate permanent rooms and spaces shall comply with the requirements listed below for:

1. Raised and Braille Characters, and Pictograms

2. Finish and Contrast

Exception: Employee name signs are not required to comply.

TAS SECTIONS 4.1.2(7), 4.1.3(16)(b) – WHERE APPLICABLE

A. Signs which provide direction to, or information about, functional spaces of the building shall comply with the requirements listed below for:

1. Character Proportion

2. Character Height

3. Finish and Contrast

Exception: Building directories, menus, and all other signs which are temporary are not required to comply.

TAS SECTION 4.1.2(7) – WHERE APPLICABLE (REFERANCE DETAIL 4.30.1)

A. Element and spaces of accessible facilities which shall be identified by the International Symbol of Accessibility are:

1. Parking spaces designated as reserved for persons with disabilities.

2. Accessible passenger loading zones.

3. Accessible entrances when not all are accessible (inaccessible entrances shall have directional signage to indicate route to nearest accessible entrance).

4. Accessible toilet and bathing facilities when not all are accessible.

TAS SECTION 4.30.2 – CHARACTER PROPORTION (REFERENCE DETAIL 4.30.2)

A. Letters and numbers on signs shall have a width-to-height ratio between 3:5 and 1:1, and a stroke-width-to-height ratio between 1:5 and 1:10.

TAS SECTION 4.30.3 – OVERHEAD SIGNS

A. Characters and numbers on overhead signs shall be sized according to the viewing distance from which they are to be read.

1. For signs higher than 80" above the finished floor, character size shall be 3" minimum.

2. The minimum height is measured using an upper case X.

3. Lower case letters are permitted.

TAS SECTION 4.30.4 – RAISED AND BRAILLE CHARCTERS AND PICTOGRAMS

A. Letter and numerals shall be raised 1/32", upper case, sans serif and shall be accompanied by grade 2 Braille.

1. Raised character height: 5/8" minimum, 2" high maximum

2. Pictograms shall be accompanied by the equivalent verbal description placed directly below the pictogram.

3. The border dimension of the pictogram shall be 6" minimum

TAS SECTION 4.30.5 – FINISH AND CONTRAST

A. The character and background of the signs shall be eggshell, matte, or other non-glare finish. Charcters and symbols shall contrast with their backgrond (either light characters on a dark background or dark characters on a light background).

TAS SECTION 4.30.6 – MOUNTING LOCATION AND HEIGHT (REFERENCE DETAIL 4.30.3)

A. Where permanent identification is provided for rooms and spaces, signs shall be installed on the wall adjacent to the latch side of the door.

B. Where there is no wall space to the latch side of the door, including at double-leaf doors, signs shall be placed on the nearest adjacent wall.

C. Mounting height shall be 60" above the finished floor to the centerline of the sign.

D. Mounting location for such signage shall be so that a person may approach within 3" of signage without encountering protruding objects or standing within the swing of a door.

International Symbol of Accessibility

Detail 4.30.1

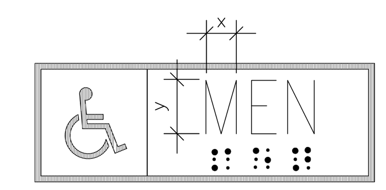

Letter & numbers on signs shall have a width to height ratio of between 3:5 & 1:1 and a stroke – width to height ratio between 1:5 & 1:10. Letters and numbers shall be raised 1/32", upper case, sans serif or simple serif type and shall be accompanied with grade 2 Braille, raised characters shall be at least 5/8" high, but no higher than 2".

Detail 4.30.2

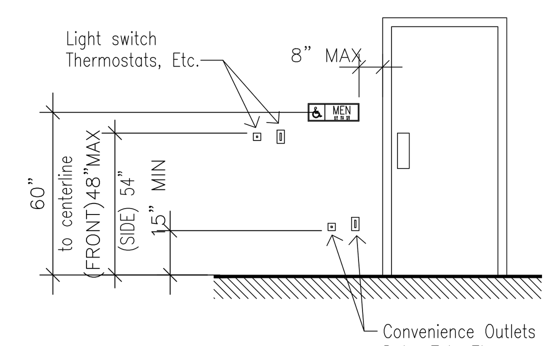

Detail 4.30.3

4.31 – PUBLIC TELEPHONES

TAS SECTION 4.1.3(17)(a) – WHERE APPLICABLE

A. If public pay telephones, public closed circuit telephones, or other public telephones if provided, then they shall comply with this section in the quantities below:

1. If one or more single unit of a type of public telephone is provided on a floor, then at least one of those phones shall comply with this section.

2. If one bank (defined as two or more adjacent public telephones, often installed as a unit) of a type of telephone is provided on a floor, then at least one of the telephones at the bank shall comply with this section.

3. If two or more banks of a type of public telephone are provided on a floor, then at least one telephone per bank shall comply with this section. The accessible unit may be installed as a single unit in proximity (either visible or with signage) to the bank. At least one public telephone per floor shall meet the requirements for a forward reach telephone.

Additional public telephones may be installed at any height.

Unless otherwise specified, accessible telephones may be either forward or side reach telephones.

TAS SECTION 4.1.3(17)(b) – WHERE APPLICABLE

A. All telephones required to be accessible shall be equipped with a volume control.

B. In addition, 25%, but never less than one, of all other public telephones provided shall be equipped with a volume control and shall be dispersed all type of telephones, including closed circuit telephones, throughout the building or facility.

C. Signage displaying the International Symbol of Access for Hearing Loss shall be provided at each telephone equipped with a volume control.

TAS SECTION 51.3 – MOUNTING HEIGHT (REFERENCE DETAIL 4.31)

A. The highest operable part of the telephone shall be 48" maximum above the floor where a forward reach is required, and 54" maximum where a side reach is required.

B. If the forward reach is over an obstruction (with knee space equal to or greater than reach distance) 20"–25" deep the maximum height shall be 44"; if the obstruction is less than 20", maximum height shall be 48"

C. Maximum height shall be 46" for side reach over an obstruction 34" maximum high and 24" maximum deep.

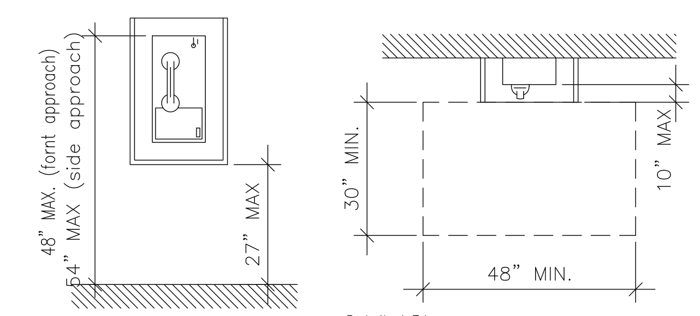

Detail 4.31

4.32 – SEATING AND TABLES

TAS SECTION 4.32.2 – SEATING

A. If seating spaces for people in wheelchairs are provided at fixed tables or counters, clear floor space of 30" x 48" shall be provided. Floor space shall not overlap required knee space by more than 19"

TAS SECTION 4.32.3 – KNEE SPACE

B. If seating for people in wheelchairs is provided at fixed tables or counters, knee space at least 27" high, 30" wide and 19" deep shall be provided.

TAS SECTION 4.32.4 – HEIGHT OF TABLES OR COUNTER

C. The tops of accessible tables and counters shall be 28" minimum, and 34" maximum, above the finished floor.

4.34 – AUTOMATIC TELLER MACHINES

TAS SECTIONS 4.34.2 – CLEAR FLOOR SPACE

A. Floor space shall comply with 4.2.4 to allow a forward, parallel approach or both.

TAS SECTIONS 4.34.3 – REACH RANGES

A. Forward approach only: controls within forward approach specified in 4.2.5.

B. Parallel approach: controls within unobstructed reach range from clear floor space at protrusion of teller machinr surround per table as follows:

Reach Depth	Maximum Height	Reach Depth	Maximum Height	Reach Depth	Maximum Height
in inches	in inches	in inches	in inches	in inches	in inches
10 or less	54	15	51	20	48 1/2
11	53 1/2	16	50 1/2	21	47 1/2
12	53	17	50	22	47
13	52 1/2	18	49 1/2	23	46 1/2
14	51 1/2	19	49	24	46

Note : above does not apply to drive up machines.

4.35 DRESSING AND FITTING ROOMS

TAS SECTIONS 4.35.2

A. Clear floor area with a 60" dia. wheelchair turnaround is required. The turnaround area must be clear of door swings.

TAS SECTIONS 4.35.4 – BENCH

A. Every accessible dressing room shall have a 24"x 48" bench fixed to the wall along the larger dimension. The bench shall be mounted 17" to 19" above the finish floor.

TAS SECTIONS 4.35.5 – MIRROR

A. A full-length mirror, measuring at least 18" wide by 54" high, shall be mounted in a position affording a view to a person on the bench as well as to a person in a standing position.

No.	REVISIONS	BY

GMS ARCHITECTS
1150 paredes line rd.
brownsville
texas 78526
(956) 546-0110
fax (956) 546-0196

RFCSP-0819-NEHSSL

SAN BENITO CISD
ADDITIONS AND RENOVATIONS AT SAN BENITO HS AND SULLIVAN ELEMENTARY
RFCSP-0819-NEHSSL

SAN BENITO TEXAS

BID PACKAGE "B"
SAN BENITO SULLIVAN

COPYRIGHT 2019
GOMEZ MENDEZ SAENZ INC.
ARCHITECTS·PLANNERS

DATE	MAY, 2019
SCALE	As Shown
DRAWN	R GOMEZ IO
JOB	S5001119
SHEET	G1.01

HATCH LEGEND

INDICATES DEMOLITION AREA

KEYED DEMOLITION NOTES:

D1 DEMOLISH EXISTING STEEL CANOPY AND ALL STRUCTURE INCLUDING BUT NOT LIMITED TO: WOOD OR METAL STUDS, CMU, BRICK VENEER, PLASTER SOFFIT, SEATING BENCHES, WALL FINISHES AND WALL BASE ELECTRICAL LIGHTING AND PLUMBING SYSTEMS

D2 REMOVE EXISTING SIDEWALKS SAW CUT AN DEMOLITION LIMITS

D3 EXISTING DOOR TO REMAIN REF ELEC DRAWINGS FOR INTERCOM AND SAFETY ACCESS REQUIREMENTS

D4 DEMOLISH ALL EXISTING LANDSCAPE AND VEGETATION AT THIS AREA NFILL ALL AREAS WHERE TREES WERE REMOVED

D5 EXISTING PLASTER SOFFIT TO REMAIN REPAIR AS NEEDED

D6 EXISTING BRICK AT COLUMNS TO BE REMOVED STRUCTURAL COLUMNS AND SOFFIT TO REMAIN

D7 EXISTING FENCING AND POST TO BE REMOVED

D8 REMOVE EXISTING INTERIOR DOOR AND FRAME REFINISH CEILING AND GRID, FLOORING AND WALLS TO MATCH EXISTING

D9 EXISTING TREE TO REMAIN REF LANDSCAPE DRAWINGS FOR SPECIFICS

D10 EXISTING BUILDING LETTERS TO BE REMOVED PROVIDE NEW LETTERS AS SPECIFIED

GENERAL DEMOLITION NOTES:

1 GENERAL CONTRACTOR TO TAKE CARE NOT TO DAMAGE EXISTING FOUNDATION, STRUCTURAL STEEL BEAMS / COLUMNS, SURROUNDING BUILDINGS AND VARIOUS SURFACES OUTSIDE OF DEMOLITION AREA. SHOULD ANY DAMAGE OCCUR OUTSIDE OF DEMOLITION AREA, THE GENERAL CONTRACTOR WILL BE RESPONSIBLE TO REPAIR OR REPLACE DAMAGED ITEMS.

2 GENERAL CONTRACTOR SHALL BE RESPONSIBLE FOR REMOVING AND DISPOSING DEBRIS & MATERIAL AWAY FROM SITE ACCORDING TO LOCAL & STATE REGULATIONS.

3 GENERAL CONTRACTOR SHALL BE RESPONSIBLE FOR VISITING THE PROJECT SITE TO SEE FIRST HAND WHAT DEMOLITION REQUIREMENTS ARE REQUIRED FOR THIS PROJECT AND SHALL INCLUDE IN HIS OR HER BID ALL THE DEMOLITION REQUIREMENTS TO COMPLETE THIS PROJECT.

4 LOCATE AND LABEL ALL UTILITIES BEFORE ANY DEMOLITION & CONSTRUCTION SHALL BEGIN SO THAT ANY SUBCONTRACTOR VISITING THIS SITE CAN EASILY IDENTIFY THESE.

5 GENERAL CONTRACTOR TO FAMILIARIZE THEMSELVES WITH THIS PROJECT SITE AND DEMOLITION REQUIREMENTS FOR BUILDING ADDITION - INCLUDE IN BID ALL DEMOLITION AND CLEARING NECESSARY TO COMPLETE THIS PROJECT

6 COORDINATE WITH ARCHITECT AND/OR ENGINEERS PRIOR TO ANY DEMOLITION ITEMS THAT ARE UNCLEAR.

7 REFER TO MECHANICAL, ELECTRICAL & PLUMBING PLANS FOR ADDITIONAL SITE DEMOLITION NOTES.

8 PROVIDE TEMPORARY CONSTRUCTION FENCE - ENSURE THAT CONSTRUCTION SITE IS SECURE FROM ANYONE THAT MAY VISIT THE SITE - ENSURE CONSTRUCTION FENCE IS A MINIMUM OF 6'-0" HIGH CHAIN LINK FENCE OR APPROVED EQUAL

9 ALL DEMOLISHED MATERIAL IS TO BE REMOVED FROM PROJECT SITE AND DISPOSED OF PROPERLY PRIOR TO COMMENCING NEW CONSTRUCTION.

10 INFILL SITE ACCORDINGLY AT AL AREAS WHERE SIDEWALKS,CANOPIES, TREES, FENCE POSTS AND SHRUBS WERE REMOVED REFERENCE STRUCTURAL FOR INFILL REQUIRREMENTS

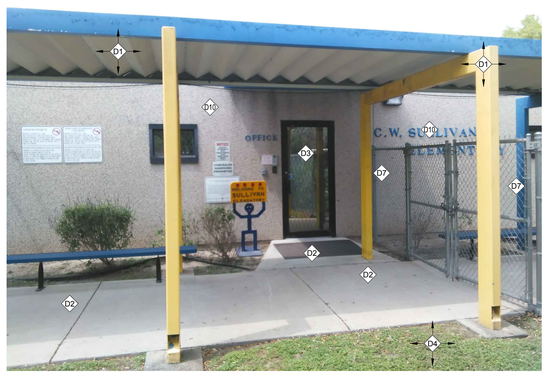

03 DEMOLITION REFERENCE
SCALE: NTS

PLAN NORTH

02 DEMOLITION REFERENCE
SCALE: NTS

PLAN NORTH

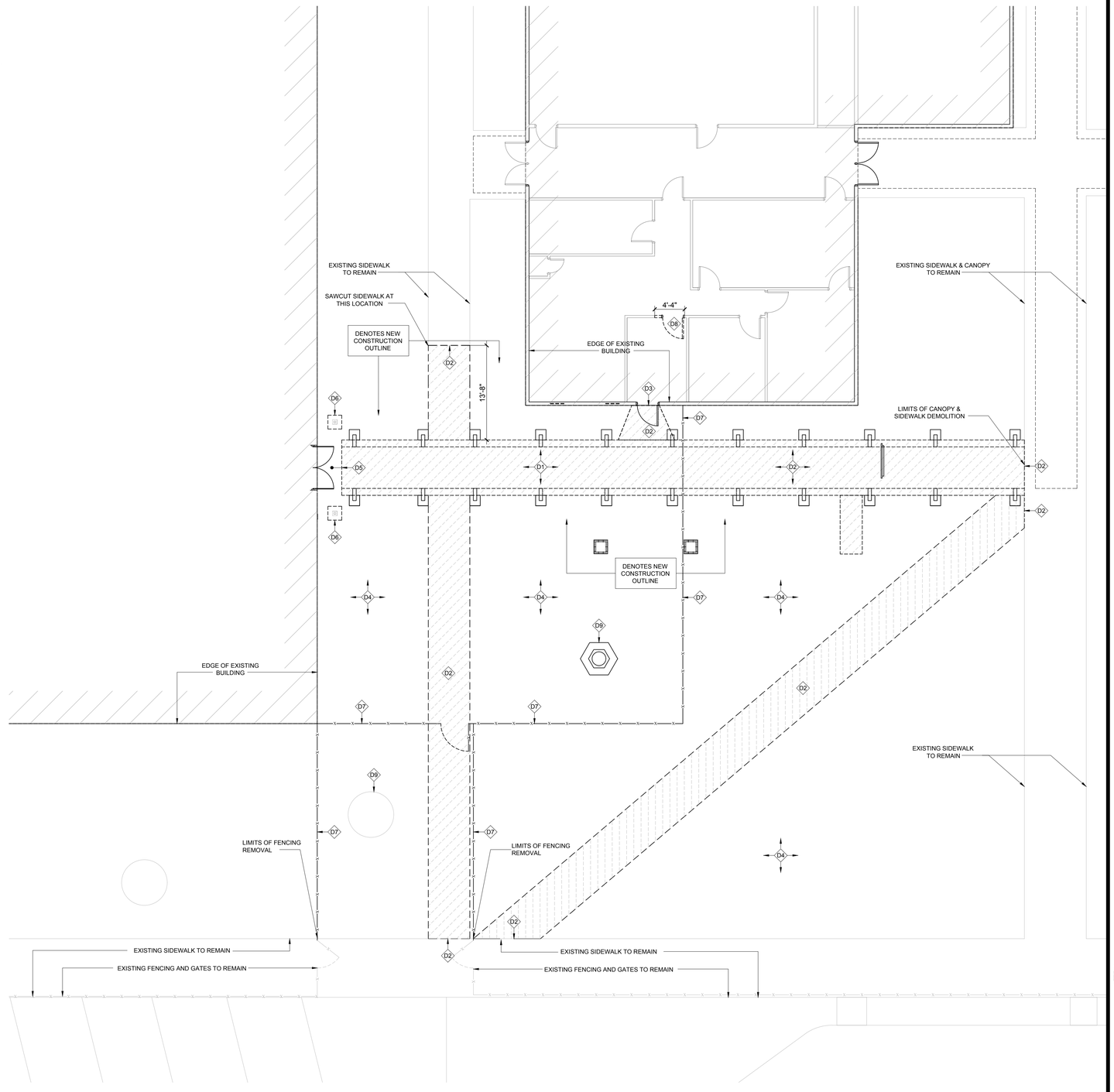

01 DEMOLITION SITE PLAN
SCALE: 1/8" = 1'-0"

PLAN NORTH

No.	REVISIONS	BY

GMS ARCHITECTS

1150 paredes line rd.
brownsville
texas 78526
(956) 546-0110
fax (956) 546-0196

RFCSP-0819-NEHSSL

SAN BENITO CISD
ADDITIONS AND RENOVATIONS AT SAN BENITO HS AND
SULLIVAN ELEMENTARY
RFCSP-0819-NEHSSL

SAN BENITO TEXAS

BID PACKAGE
"B"
SAN BENITO
SULLIVAN

REGISTERED ARCHITECT
ROMAN GABRIEL MENDEZ
23623
STATE OF TEXAS
6/27/19

COPYRIGHT 2019
GOMEZ MENDEZ SAENZ INC.
ARCHITECTS-PLANNERS

DATE	MAY, 2019
SCALE	As Shown
DRAWN	R GOMEZ IO
JOB	S5001119
SHEET	D1.00

C:\Users\Station 9\Dropbox\S5001119 SBISD HS & Sullivan\Sullivan\3 Sullivan ref-master-plan.dwg

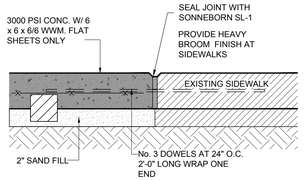

06 SIDEWALK DETAIL

SCALE: 1-1/2" = 1'-0"

TYPICAL AT ALL NEW TO EXISTING SIDEWALK TRANSITIONS

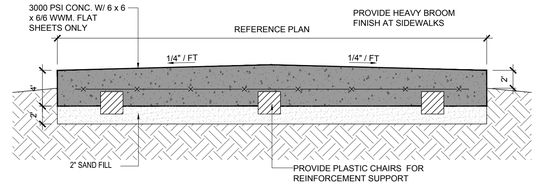

05 SIDEWALK DETAIL

SCALE: 1-1/2" = 1'-0"

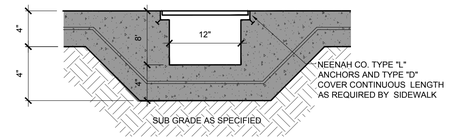

04 TRENCH DETAIL

SCALE 1 1/2" = 1'-0"

1.) CONTRACTOR TO VERIFY ALL BUILDING ROOF DRAINS & DOWN SPOUTS THAT WILL SPILL ONTO A SIDEWALK AND PROVIDE A TRENCH GUTTER AT THAT LOCATION TO ALLOW FOR RAIN WATER TO DRAIN THRU GUTTER AND NOT OVER SIDEWALK (WHICH COULD CAUSE A TRIPPING HAZARD). CONTRACTOR TO VERIFY TRENCH GUTTERS NEEDED PRIOR TO ANY POURING OF SIDEWALKS AROUND PERIMETER OF BUILDING. TYPICAL AT ALL BUILDINGS.

2.) REFER TO CIVIL DRAWINGS FOR ALL OTHER LOCATIONS OF TRENCH GUTTERS

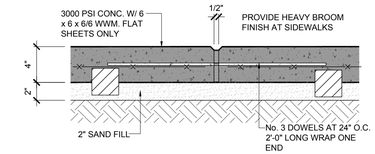

03 SIDEWALK EXP. JT. DETAIL

SCALE: 1-1/2"=1'-0"

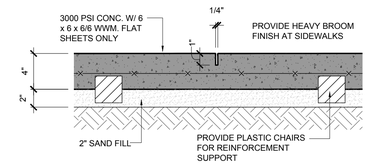

02 SIDEWALK CONTROL JT.

SCALE: 1-1/2"=1'-0"

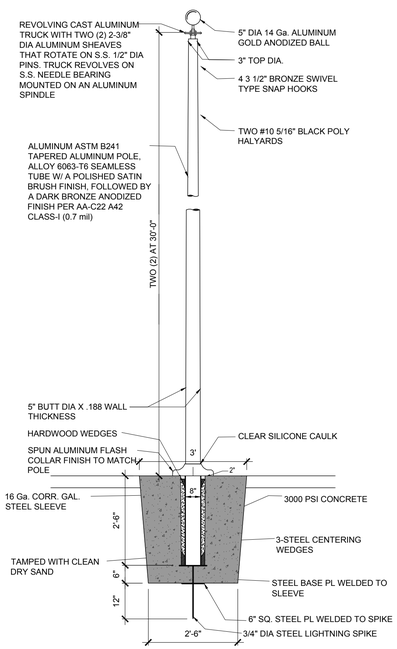

07 FLAG POLE DETAIL

SCALE: 1/2" = 1'-0" REFER TO PLANS FOR LOCATIONS

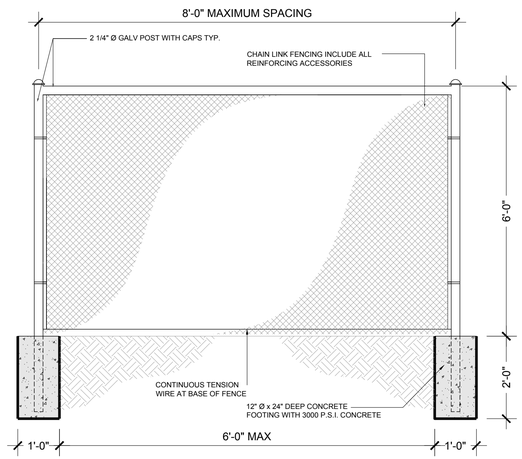

08 FENCE ELEVATION

SCALE:3/4"=1'-0"

01 CAMPUS PLAN

SCALE: 1/8" = 1'-0"

SITE NOTES:

1.) FINISH GRADE TO BE 6" BELOW FINISH FLOOR ELEVATION SLOPE AWAY FROM ALL IMPROVEMENTS AT A RATE OF 1/4" PER FOOT FOR THE FIRST 10'-0"; THEN AT A RATE OF 1/8" PER FOOT FOR THE NEXT 20'-0"

2.) SIDE WALK SLOPE IS NOT TO EXCEED 1:20 WITH A CROSS SLOPE OF 1:50 AT ANY INSTANCE.

3.) REFER TO CIVIL, LANDSCAPE AND MECHANICAL DRAWINGS FOR ADDITIONAL WORK TO BE PERFORMED UNDER THIS CONTRACT.

4.) AT ALL ENTRIES OF NEW BUILDINGS WARP CONCRETE SIDEWALKS SO AS TO PROVIDE A FLAT SURFACE WITH FINISHED FLOOR

LEGEND

1	5'-0" WIDE CONCRETE WALK W/ 5' TURN AROUNDS @ 250' MAX REFER TO DTL'S 2-6 \B1.01
2	6'-0" WIDE CONCRETE WALK W/ 5' TURN AROUNDS @ 250' MAX REFER TO DTL'S 2-6 \B1.01
3	NEW LANDSCAPE AND IRRIGATION REF. LANDSCAPE DRAWINGS
4	NEW FLAG POLES REF 07/B1.01 (2 REQUIRED)
5	NEW TO EXISTING SIDEWALK CONDITION REF. 06\B1.01
6	NEW FENCING REF. 08\B1.01
7	NEW RETENTION WALL. REF LANDSCAPE DWGS

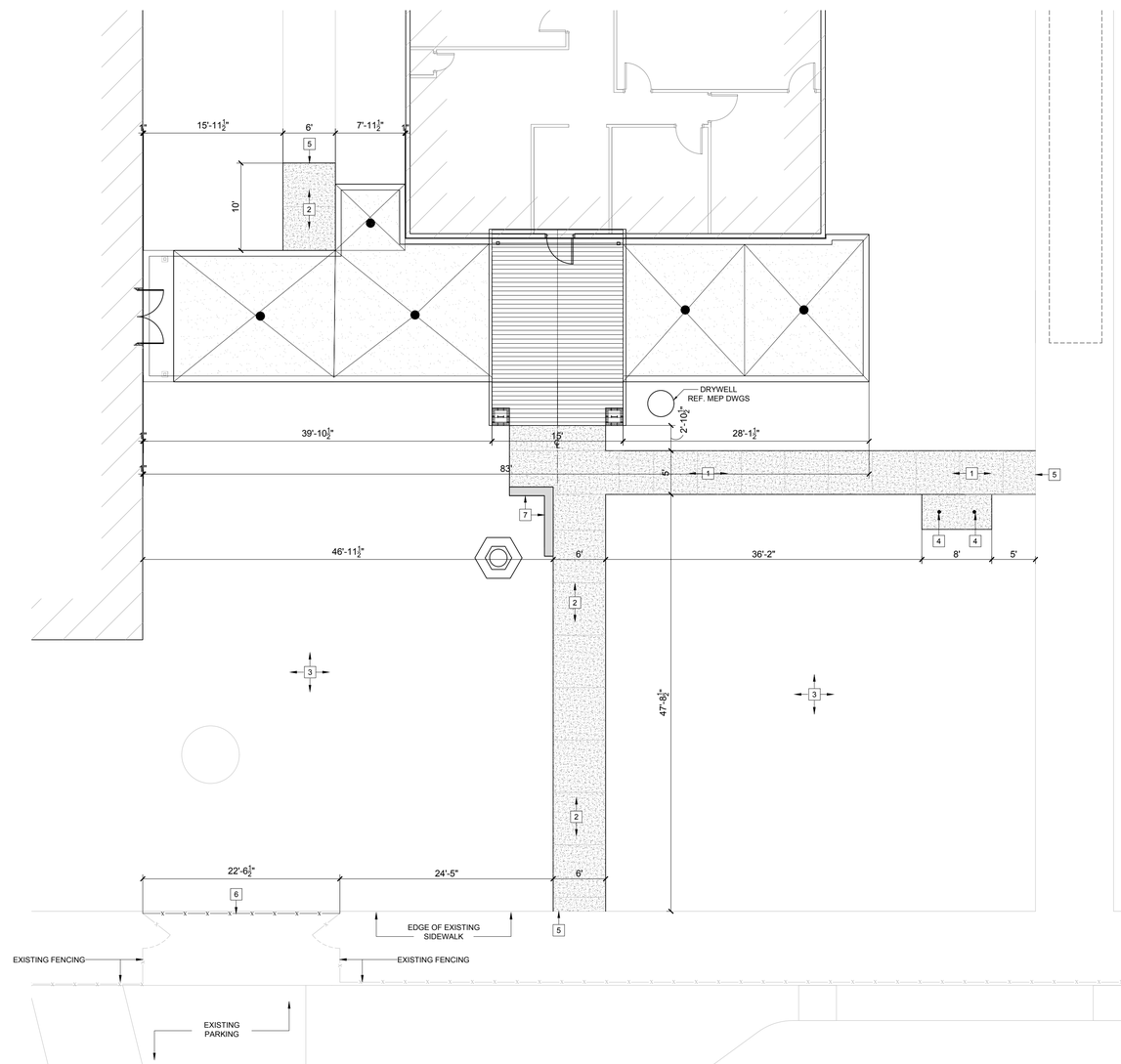

No.	REVISIONS	BY

GMS ARCHITECTS

1150 paredes line rd.
brownsville
texas 78526
(956) 546-0110
fax (956) 546-0196

RFCSP-0819-NEHSSL

SAN BENITO CISD
ADDITIONS AND RENOVATIONS AT SAN BENITO HS AND SULLIVAN ELEMENTARY
RFCSP-0819-NEHSSL

SAN BENITO TEXAS

BID PACKAGE "B"
SAN BENITO
SULLIVAN

REGISTERED ARCHITECT ROAN GABRIEL GOMEZ 3625 STATE OF TEXAS

COPYRIGHT 2019
GOMEZ MENDEZ SAENZ INC.
ARCHITECTS-PLANNERS

DATE	MAY, 2019
SCALE	As Shown
DRAWN	R GOMEZ IO
JOB	S5001119
SHEET	B1.01

ALL WALLS TO BE PAINTED UNLESS NOTED OTHERWISE

ROOM FINISH SCHEDULE

THIS SCHEDULE BASED ON PLAN NORTH ORIENTATION

ROOM	ROOM NAME	BASE	FLR.	WALLS N	WALLS S	WALLS E	WALLS W	CLG.	CLG. HEIGHTS	REMARKS
100	ENTRY		CONC	BRICK				MTL	9'-1"	
101	WAITING	RUBBER	VCT	CMU/PTD	GYP/PTD	GYP/PTD	GYP/PTD	SAC I	9'-0"	
102	MECHANICAL	RUBBER	VCT	CMU/PTD	CMU/PTD	EXIST	CMU/PTD	SAC I	9'-0"	
103	MECHANICAL	RUBBER	VCT	GYP/PTD	GYP/PTD	GYP/PTD	GYP/PTD	SAC I	9'-0"	
104	STORAGE	RUBBER	VCT	GYP/PTD	GYP/PTD	GYP/PTD	GYP/PTD	SAC I	9'-0"	
105	CONFERENCE	RUBBER	VCT	CMU/PTD	CMU/PTD	GYP/PTD	CMU/PTD	SAC I	9'-0"	
106	LOBBY	RUBBER	VCT	CMU/PTD	CMU/PTD	GYP/PTD	GYP/PTD	VARIES	VARIES	

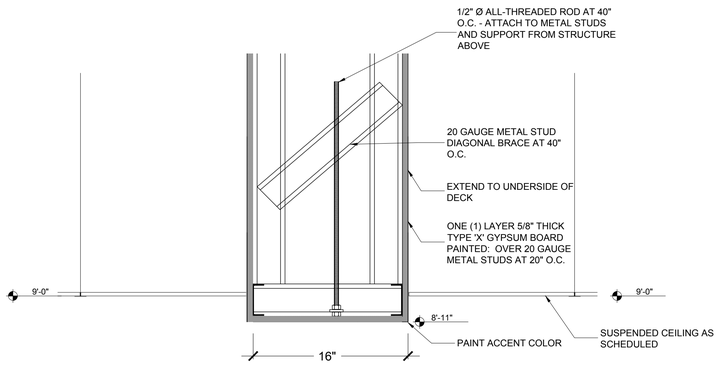

04 SECTION DETAIL

SCALE 1" = 1'-0"

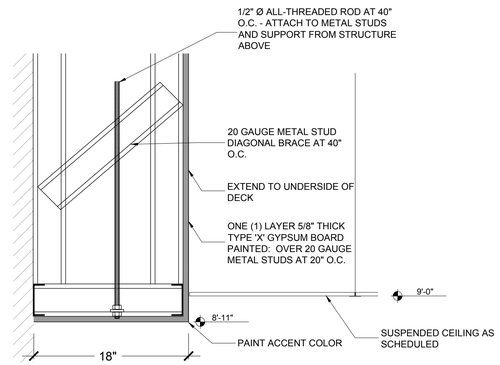

03 SECTION DETAIL

SCALE 1" = 1'-0"

F I N I S H L E G E N D :

RUBBER — RUBBER BASE
PTD — PAINTED
CMU/PTD — CONC. MASONRY UNIT PAINTED
GYP/PTD — GYPSUM BOARD PAINTED
CONC. — SEALED CONCRETE
MTL — METAL SOFFIT PANELS
C.T. — CERAMIC TILE BY DAL-TILE
VCT — VINYL TILE ALLOW FOR 3 COLORS
TERAZ — TERRAZO

W A L L T Y P E L E G E N D

01 FLOOR PLAN

SCALE :1/8" = 1'=0"

G E N E R A L N O T E S:

1. REFERENCE **A4.00 SERIES** FOR WALL SECTIONS NOTED ON THIS PLAN.
2. PROVIDE MASONRY CONTROL JOINTS AS PER STRUCTURAL STRUCTURAL .
3. PROVIDE TRANSITION STRIPS AT ALL DISSIMILAR FLOOR CONDITIONS
4. REFERENCE FIXTURE PLANS SHEET FOR FIXTURES, ACCESSORY REQUIREMENTS AND FLOOR TILE PATTERN LAYOUT
5. REFERENCE SHEET A3.01 FOR TOILET ENLARGEMENTS

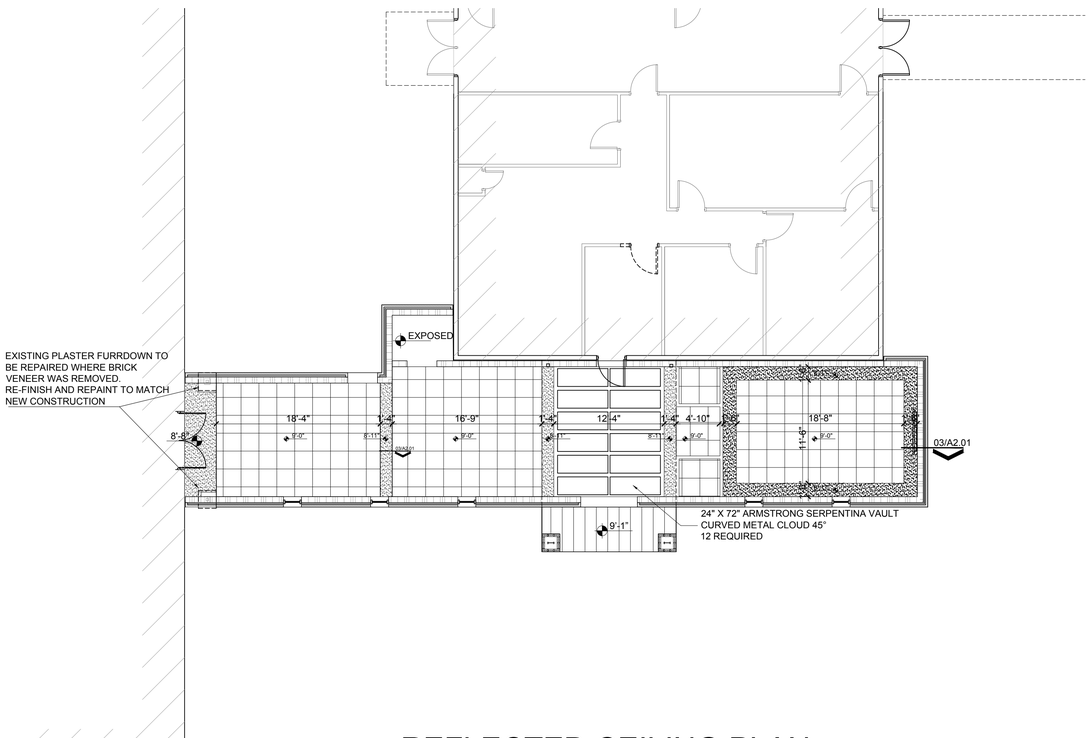

02 REFLECTED CEILING PLAN

SCALE :1/8" = 1'=0"

NOTE: REFER TO ROOM FINISHED SCHEDULE FOR CEILING TYPES TO BE USED ON THIS PLAN PROVIDE FOR ALL STRUCTURE INCLUDED BUT NOT LIMITED TO PIPING, CONDUITS AND ANY METAL SUPPORT OR ANCHORING TO BE PAINTED WITH TNEMEC PAINT SYSTEM

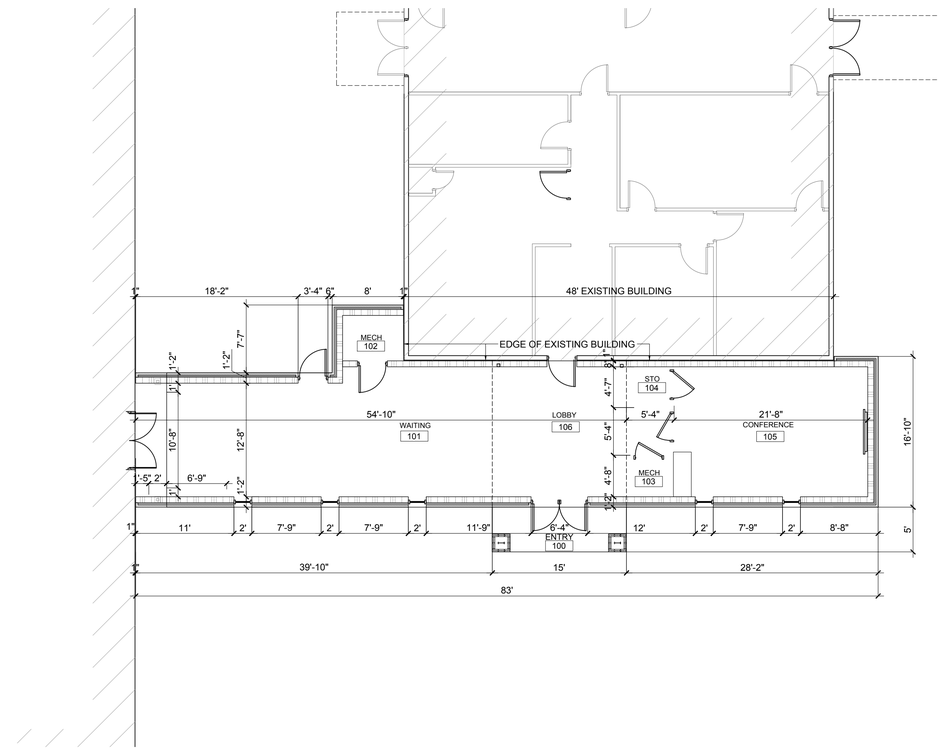

01 FLOOR PLAN

SCALE: 1/8" = 1'-0"

PLAN NORTH

No.	REVISIONS	BY

GMS ARCHITECTS

1150 paredes line rd.
brownsville
texas 78526
(956) 546-0110
fax (956) 546-0196

RFCSP-0819-NEHSSL

SAN BENITO CISD
ADDITIONS AND RENOVATIONS AT SAN BENITO HS AND SULLIVAN ELEMENTARY
RFCSP-0819-NEHSSL

SAN BENITO TEXAS

BID PACKAGE "B"
SAN BENITO SULLIVAN

REGISTERED ARCHITECT
ROAN GABRIEL GOMEZ
23625
STATE OF TEXAS
8/2/19

COPYRIGHT 2019
GOMEZ MENDEZ SAENZ INC.
ARCHITECTS-PLANNERS

DATE	MAY, 2019
SCALE	As Shown
DRAWN	R GOMEZ IO
JOB	S5001119
SHEET	B2.01

C:\Users\Station 9\Dropbox\S5001119 SBISD HS & Sullivan\Sullivan\X Sullivan ref-master plan.dwg

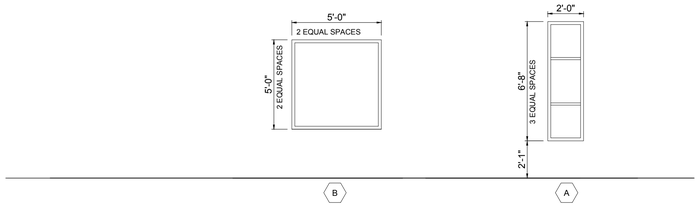

BRONZE ALUMINUM FRAME SYSTEM WITH INSULATED LOW-E GLASS - OPAQUE

BRONZE ALUMINUM FRAME SYSTEM WITH INSULATED LOW-E GLASS - OPAQUE

WINDOW ELEVATIONS

SCALE 1/4" = 1'-0"

N O T E: 1.) ALL EXTERIOR WINDOW FRAMES AND GLAZING TO MEET STRUCTURAL WIND LOAD PRESSURES.

NOTE : PROVIDE LABELED DOORS AND HARDWARE AT ALL FIRE RATED PARTITIONS
NOTE : ALL EXTERIOR HOLLOW METAL DOORS & FRAMES TO BE HOT DIPPED Galv. - TYP.
NOTE : ALL GIVEN DIMENSIONS OF DOOR LITES ARE VISIBLE GLASS AREA - ACTUAL LIGHT OPENING TO VARY BY MANUFACTURE'S REQUIREMENTS

NOTE : REFER TO FIXTURE PLANS FOR CORRESPONDING DOOR HARDWARE SETS
NOTE : PROVIDE CYLINDERS OF ALL LOCKSETS TO BE KEYED TO EXISTING GRANDMASTER SYSTEM.
NOTE : CONTRACTOR MUST PROVIDE TRANSITION STRIPS AT ALL DISSIMILAR FLOOR CONDITIONS BETWEEN ROOMS AT DOOR SILLS

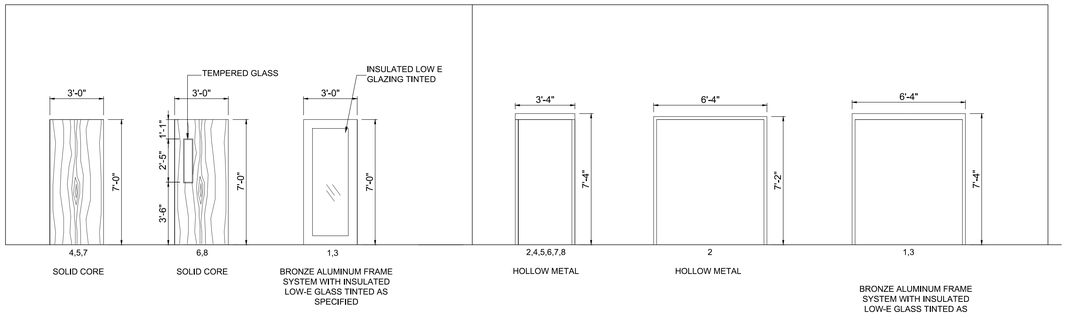

DOOR ELEVATIONS

SCALE 1/4" = 1'-0"

NOTE: ALL EXTERIOR HOLLOW METAL DOORS TO BE HOT DIPPED GALVANIZED REGARDLESS WHETHER NOTED OR NOT.

DOOR FRAME ELEVATIONS

SCALE 1/4" = 1'-0"

NOTE: ALL EXTERIOR HOLLOW METAL DOOR FRAMES TO BE HOT DIPPED GALVANIZED REGARDLESS WHETHER NOTED OR NOT.

ALL EXTERIOR GLAZING ASSEMBLIES FOR WINDOWS & STOREFRONTS NEED TO BE DESIGNED TO MEET ASCE 7-05 WIND PRESSURES & SHALL BE IMPACT RESISTANT MEETING ASTM E 1996 FOR LARGE MISSILES.

ALL EXTERIOR WINDOWS, DOORS, STOREFRONTS & O.H. DOOR ASSEMBLIES SHALL BE CERTIFIED TO MEET THE PROJECTS MINIMUM DESIGN WIND PRESSURES. REFERENCE STRUCTURAL DRAWINGS FOR DESIGN WIND PRESSURE REQUIREMENTS - TYPICAL THROUGHOUT PROJECT

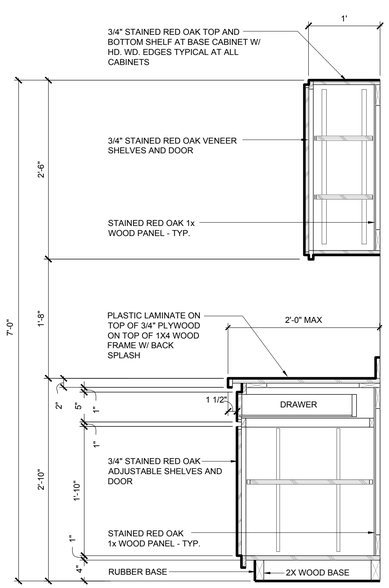

04 CABINET SECTION

SCALE 1" = 1'-0"

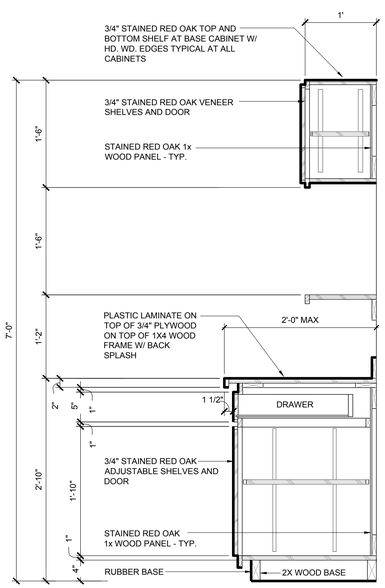

03 CABINET SECTION

SCALE 1" = 1'-0"

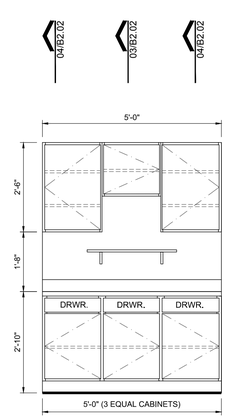

02 CABINET ELEVATION

SCALE 1" = 1'-0"

DOOR SCHEDULE

DOOR NO.	DOOR MATL.	DOOR W	DOOR H	DOOR T	FRAME MATL.	FRAME W	FRAME H	FRAME T	HDWR	DETAIL JAMB	DETAIL HEAD	DETAIL SILL	REMARKS
1	ALUM.	PR - 3'-0"	7'-0"	1 3/4"	ALUM.	9'-4"	11'-4"	VERIFY		11/A3.02	12/A3.02	01/A3.02	
2	S.C.	PR - 3'-0"	7'-0"	1 3/4"	ALUM.	6'-4"	7'-2"	VERIFY		11/A3.02	12/A3.02	01/A3.02	
3	S.C.	3'-0"	7'-0"	1 3/4"	H.M.	3'-4"	7'-4"	VERIFY		11/A3.02	12/A3.02	01/A3.02	
4	S.C.	3'-0"	7'-0"	1 3/4"	H.M.	3'-4"	7'-4"	VERIFY		11/A3.02	12/A3.02	01/A3.02	
5	S.C.	3'-0"	7'-0"	1 3/4"	H.M.	3'-4"	7'-4"	VERIFY		11/A3.02	12/A3.02	01/A3.02	
6	S.C.	3'-0"	7'-0"	1 3/4"	H.M.	3'-4"	7'-4"	VERIFY		11/A3.02	12/A3.02	01/A3.02	
7	S.C.	3'-0"	7'-0"	1 3/4"	H.M.	3'-4"	7'-4"	VERIFY		11/A3.02	12/A3.02	01/A3.02	
8	S.C.	3'-0"	7'-0"	1 3/4"	H.M.	3'-4"	7'-4"	VERIFY		11/A3.02	12/A3.02	01/A3.02	
9	S.C.	3'-0"	7'-0"	1 3/4"	H.M.	3'-4"	7'-4"	VERIFY		11/A3.02	12/A3.02	01/A3.02	

WINDOW SCHEDULE

WDW NO.	MATL	SIZE W	SIZE H	ELEVATION HEAD	ELEVATION SILL	GLASS	DETAIL JAMB	DETAIL HEAD	DETAIL SILL	REMARKS
A	BRNZ-ALUM	2'-0"	6'-8"			LOW- E INSUL OPAQUE	02/A3.02	03/A3.02	04/A3.02	
B	BRNZ-ALUM	5'-0"	5'-0"			LOW- E INSUL OPAQUE	10/A3.02	12/A3.02	11/A3.02	

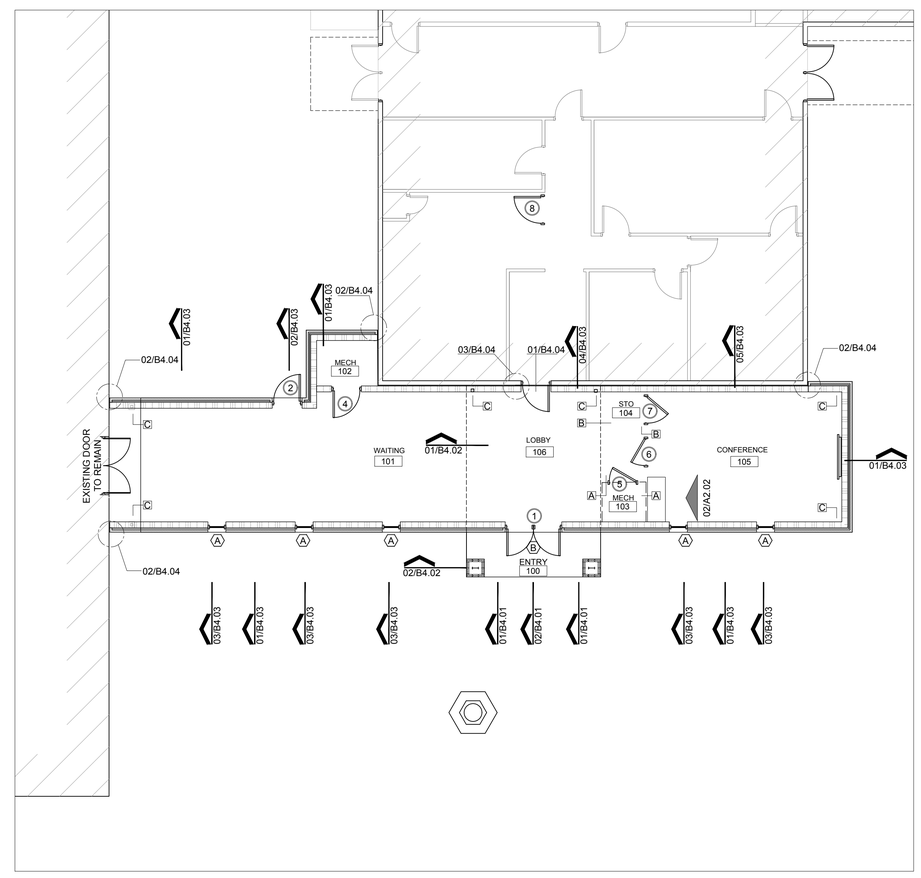

01 FIXTURE PLAN

SCALE: 1/8" = 1'-0"

PLAN NORTH

No.	REVISIONS	BY

GMS ARCHITECTS
1150 paredes line rd.
brownsville
texas 78526
(956) 546-0110
fax (956) 546-0196

RFCSP-0819-NEHSSL

SAN BENITO CISD
ADDITIONS AND RENOVATIONS AT SAN BENITO HS AND SULLIVAN ELEMENTARY
RFCSP-0819-NEHSSL

SAN BENITO TEXAS

BID PACKAGE "B"
SAN BENITO SULLIVAN

REGISTERED ARCHITECT RAM GABRIEL GOMEZ 08/21/19 23625 STATE OF TEXAS

COPYRIGHT 2019
GOMEZ MENDEZ SAENZ INC.
ARCHITECTS-PLANNERS

DATE	MAY, 2019
SCALE	As Shown
DRAWN	R GOMEZ IO
JOB	S5001119
SHEET	B2.02

C:\Users\Station 9\Dropbox\S5001119 SBISD HS & Sullivan\Sullivan\X Sullivan ref-master plan.dwg

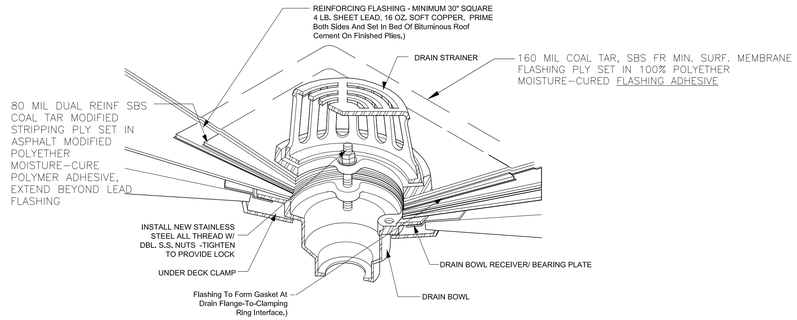

04 TYPICAL ROOF DRAIN DETAIL

NOT TO SCALE

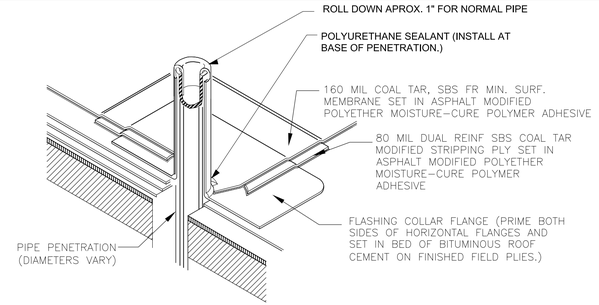

03 VENT PIPE DETAIL

NOT TO SCALE

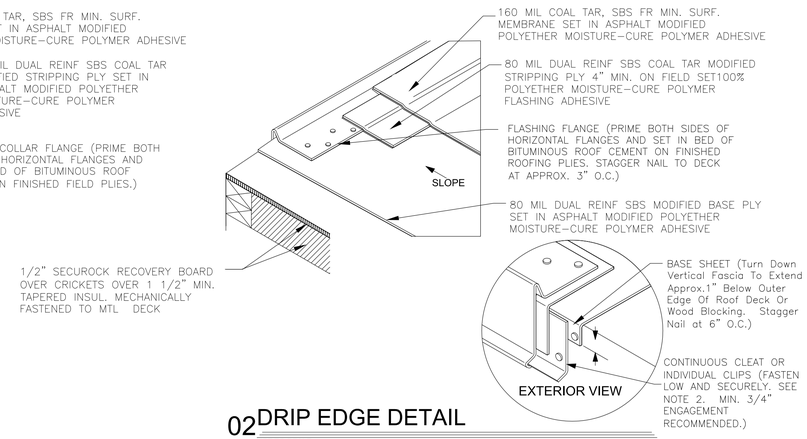

02 DRIP EDGE DETAIL

NOT TO SCALE

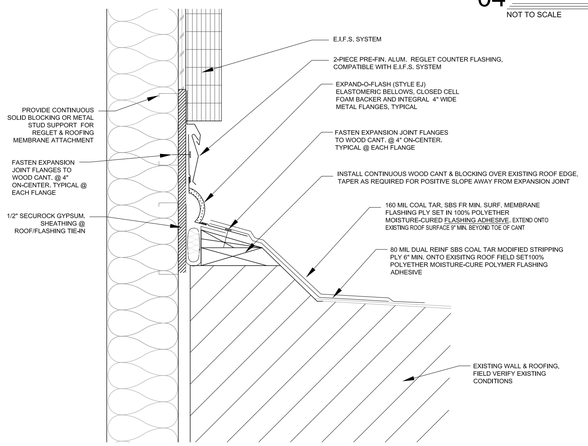

05 EXP. JT. DETAIL

NOT TO SCALE

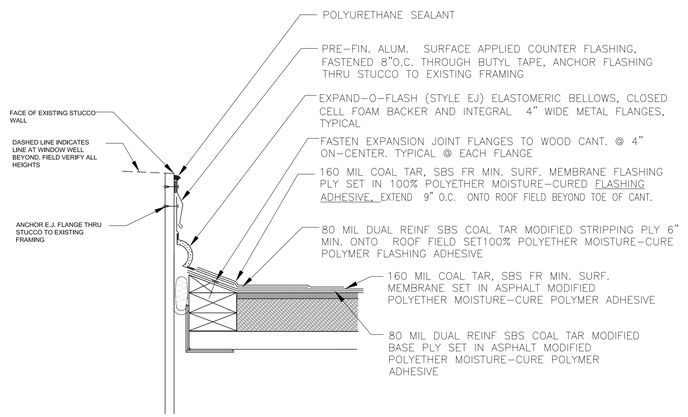

06 EXP. JT. DETAIL

NOT TO SCALE

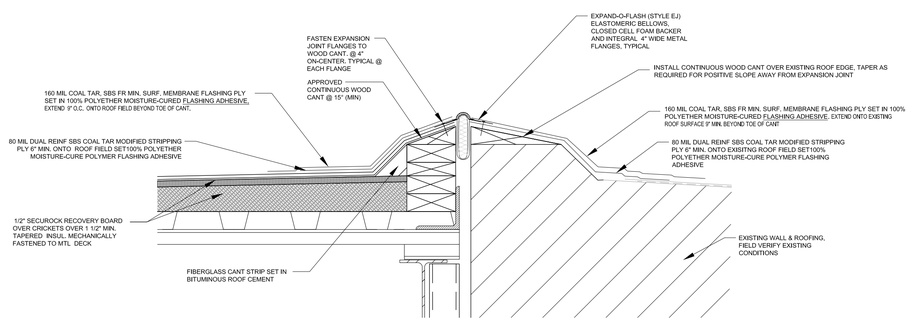

08 EXP. JT. DETAIL

NOT TO SCALE

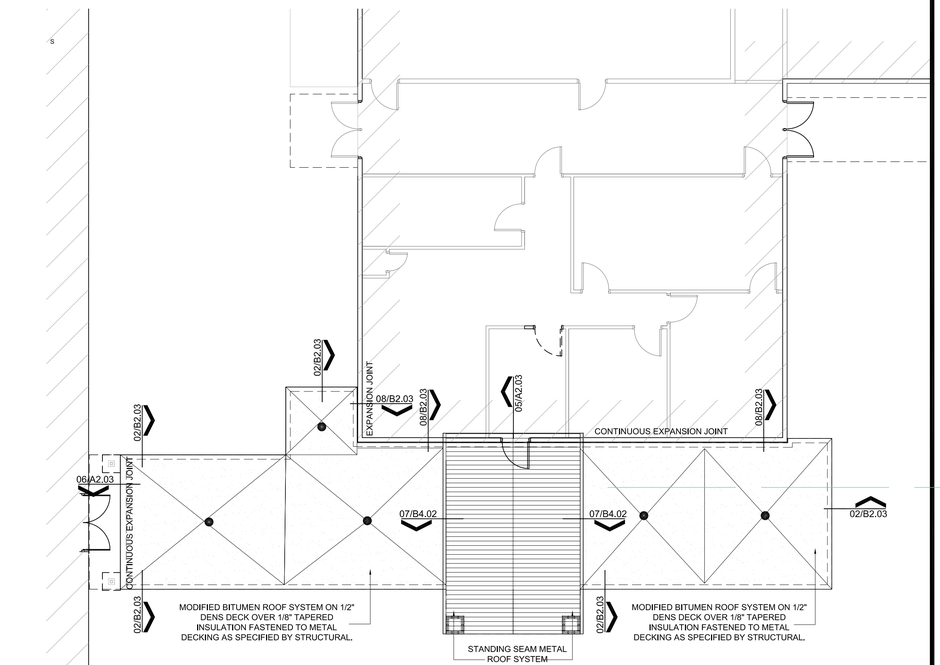

01 ROOF PLAN

SCALE: 1/8" = 1'-0"

PLAN NORTH

GENERAL ROOF NOTES:

1.) PROVIDE WALKWAY SYSTEM AT ALL ROOF TOP EQUIPMENT

2.) PROVIDE POSITIVE DRAINAGE IN AND AROUND ALL ROOF TOP EQUIPMENT SO AS TO DRAIN INTO AREA ROOF DRAINS

3.) PROVIDE POSITIVE DRAINAGE TOWARDS DRAINS BY USE OF CRICKETS

4.) PROVIDE PRE-MANUFACTURED CONCRETE SPLASH BLOCKS AT EACH ROOF DOWN SPOUT LOCATION AND OR AT EACH ROOF DRAIN NOZZLE OUTLET. SECURE SPLASH BLOCKS TO EITHER GROUND OR BUILDING

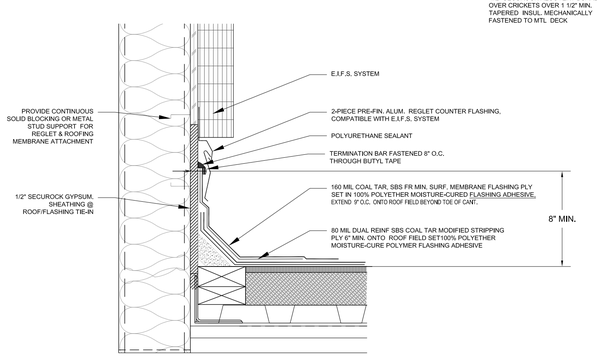

07 FLASHING DETAIL

NOT TO SCALE

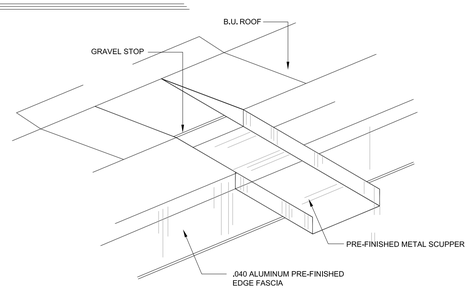

09 SCUPPER DETAIL

NOT TO SCALE

No.	REVISIONS	BY

GMS ARCHITECTS

1150 paredes line rd.
brownsville
texas 78526
(956) 546-0110
fax (956) 546-0196

RFCSP-0819-NEHSSL

SAN BENITO CISD
ADDITIONS AND RENOVATIONS AT SAN BENITO HS AND SULLIVAN ELEMENTARY
RFCSP-0819-NEHSSL

SAN BENITO TEXAS

BID PACKAGE "B"
SAN BENITO
SULLIVAN

REGISTERED ARCHITECT RAM GABRIEL GOMEZ 6/24/19 13625 STATE OF TEXAS

COPYRIGHT 2019
GOMEZ MENDEZ SAENZ INC.
ARCHITECTS-PLANNERS

DATE	MAY, 2019
SCALE	As Shown
DRAWN	R GOMEZ IO
JOB	S5001119
SHEET	B2.03

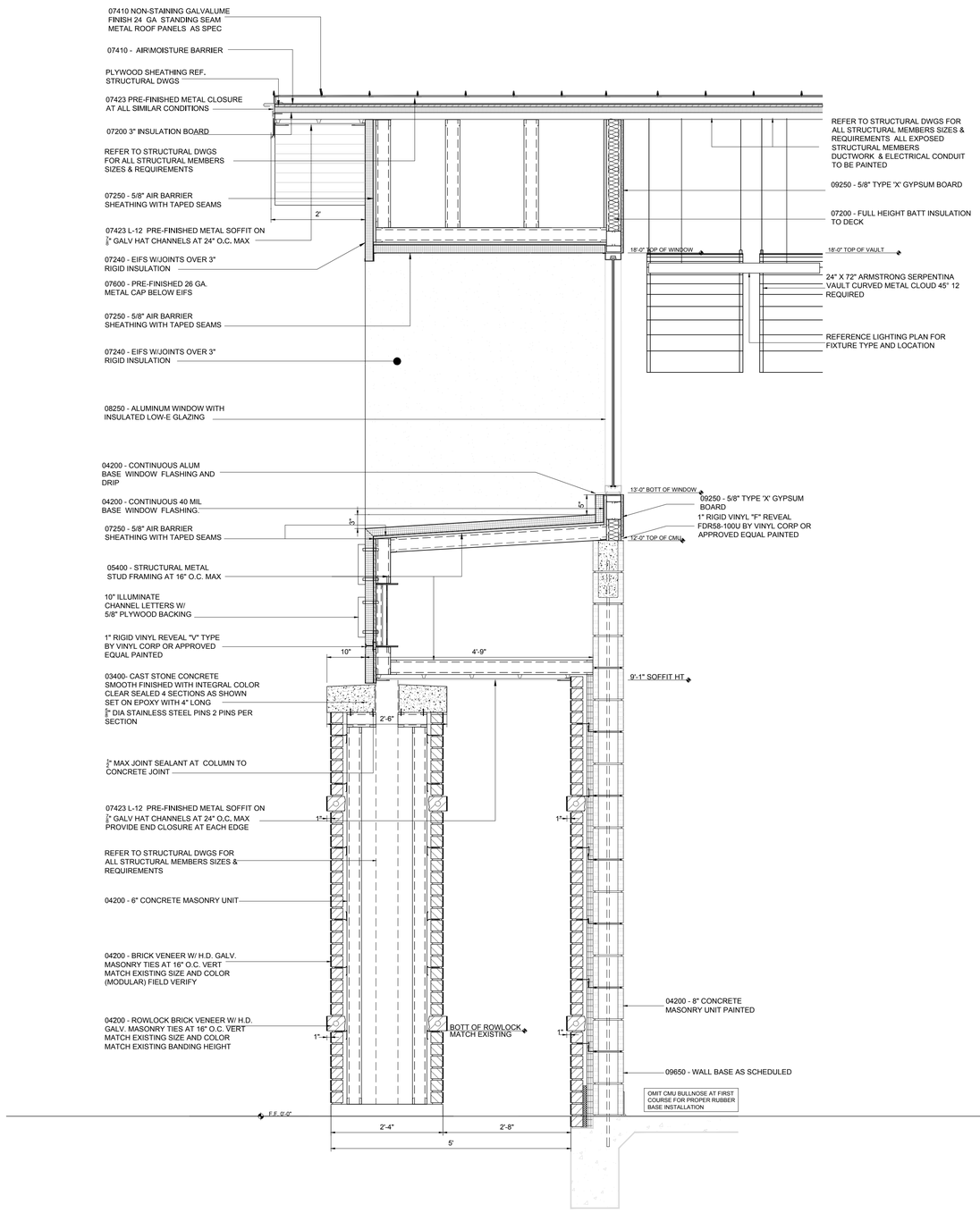

02 WALL SECTION

SCALE 3/4" = 1'-0"

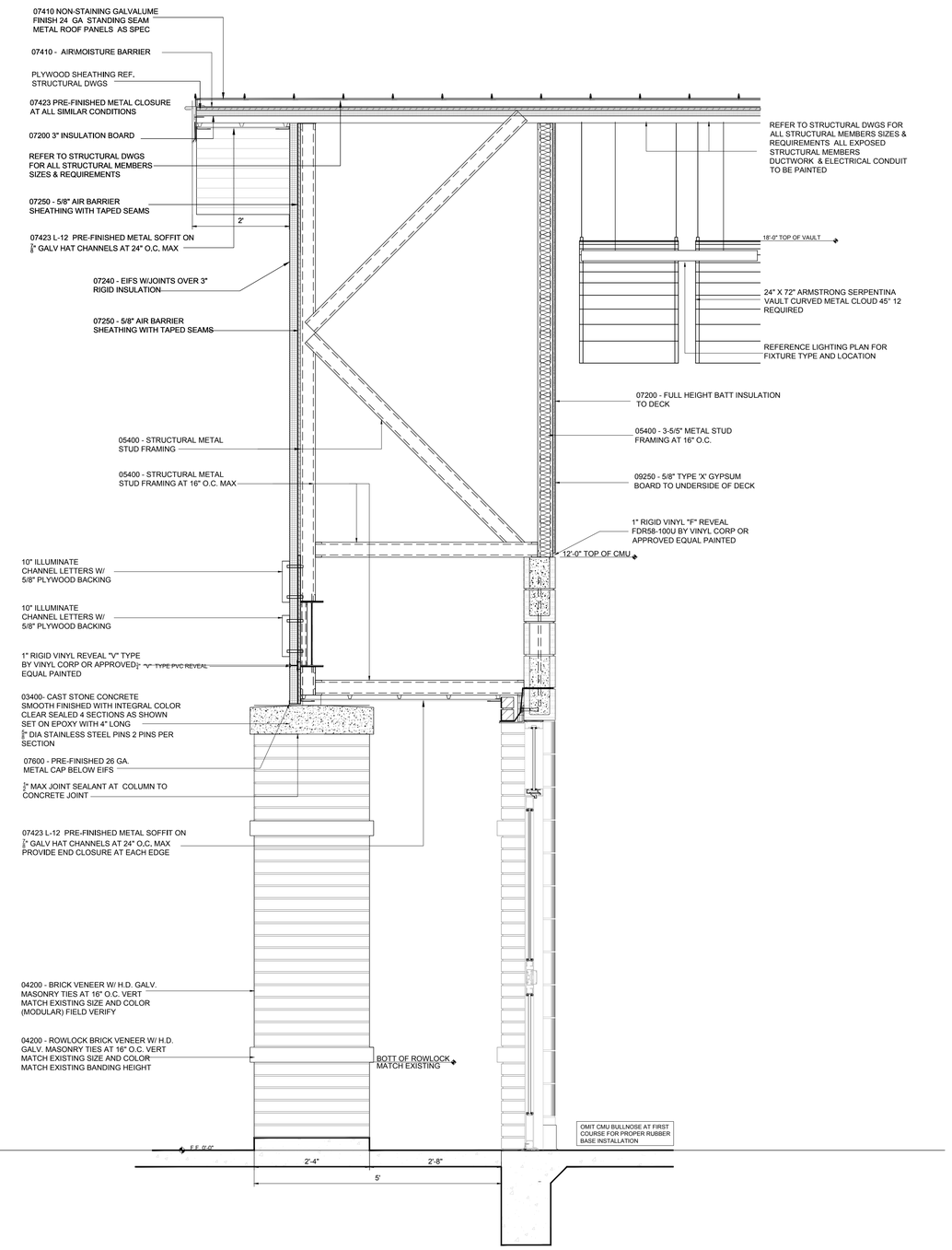

01 WALL SECTION

SCALE 3/4" = 1'-0"

No.	REVISIONS	BY

GMS ARCHITECTS

1150 paredes line rd.
brownsville
texas 78526
(956) 546-0110
fax (956) 546-0196

RFCSP-0819-NEHSSL

TEXAS

SAN BENITO CISD
ADDITIONS AND RENOVATIONS AT SAN BENITO HS AND SULLIVAN ELEMENTARY
RFCSP-0819-NEHSSL

SAN BENITO

BID PACKAGE "B"
SAN BENITO
SULLIVAN

REGISTERED ARCHITECT ROWN GABRIEL MENDEZ 23625 STATE OF TEXAS

COPYRIGHT 2019
GOMEZ MENDEZ SAENZ INC.
ARCHITECTS/PLANNERS

DATE	MAY, 2019
SCALE	As Shown
DRAWN	R GOMEZ IO
JOB	S5001119
SHEET	B4.01

C:\Users\Station 9\Dropbox\S5001119 SBISD HS & Sullivan\Sullivan\X Sullivan ref-master plan.dwg

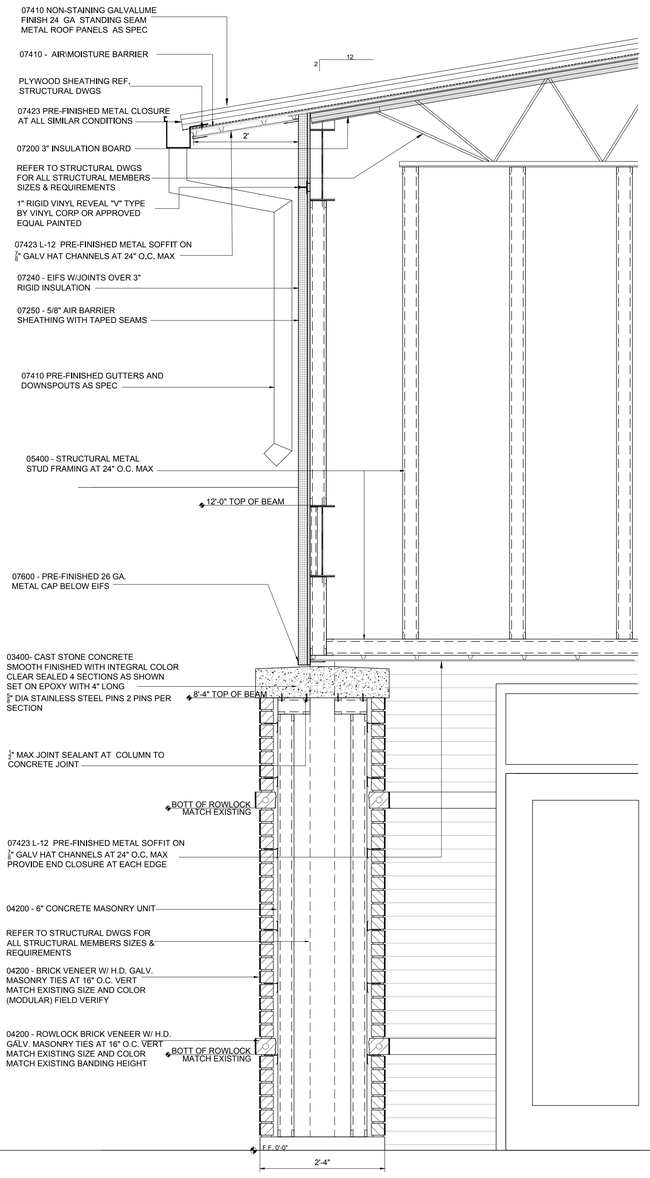

02 WALL SECTION

SCALE 3/4" = 1'-0"

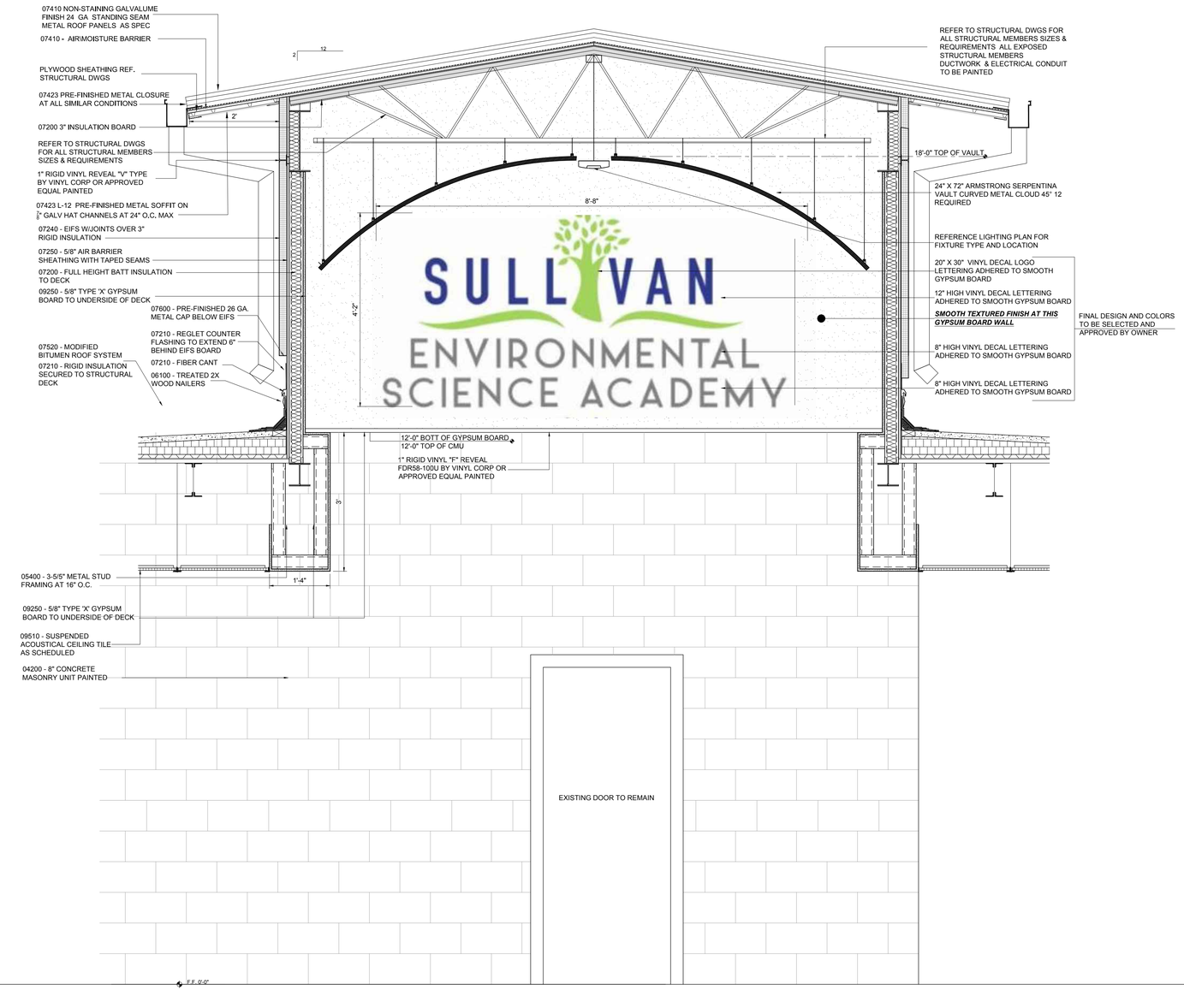

01 WALL SECTION

SCALE 3/4" = 1'-0"

No.	REVISIONS	BY

GMS ARCHITECTS

1150 paredes line rd.
brownsville
texas 78526
(956) 546-0110
fax (956) 546-0196

RFCSP-0819-NEHSSL

SAN BENITO CISD
ADDITIONS AND RENOVATIONS AT SAN BENITO HS AND SULLIVAN ELEMENTARY
RFCSP-0819-NEHSSL

SAN BENITO TEXAS

BID PACKAGE "B"
SAN BENITO SULLIVAN

REGISTERED ARCHITECT ROW GABRIEL MENDEZ JR. 23623 STATE OF TEXAS
8/27/19

COPYRIGHT 2019
GOMEZ MENDEZ SAENZ INC.
ARCHITECTS-PLANNERS

DATE	MAY, 2019
SCALE	As Shown
DRAWN	R GOMEZ IO
JOB	S5001119
SHEET	B4.02

C:\Users\Station 9\Dropbox\S5001119 SBISD HS & Sullivan\Sullivan\X Sullivan ref-master plan.dwg

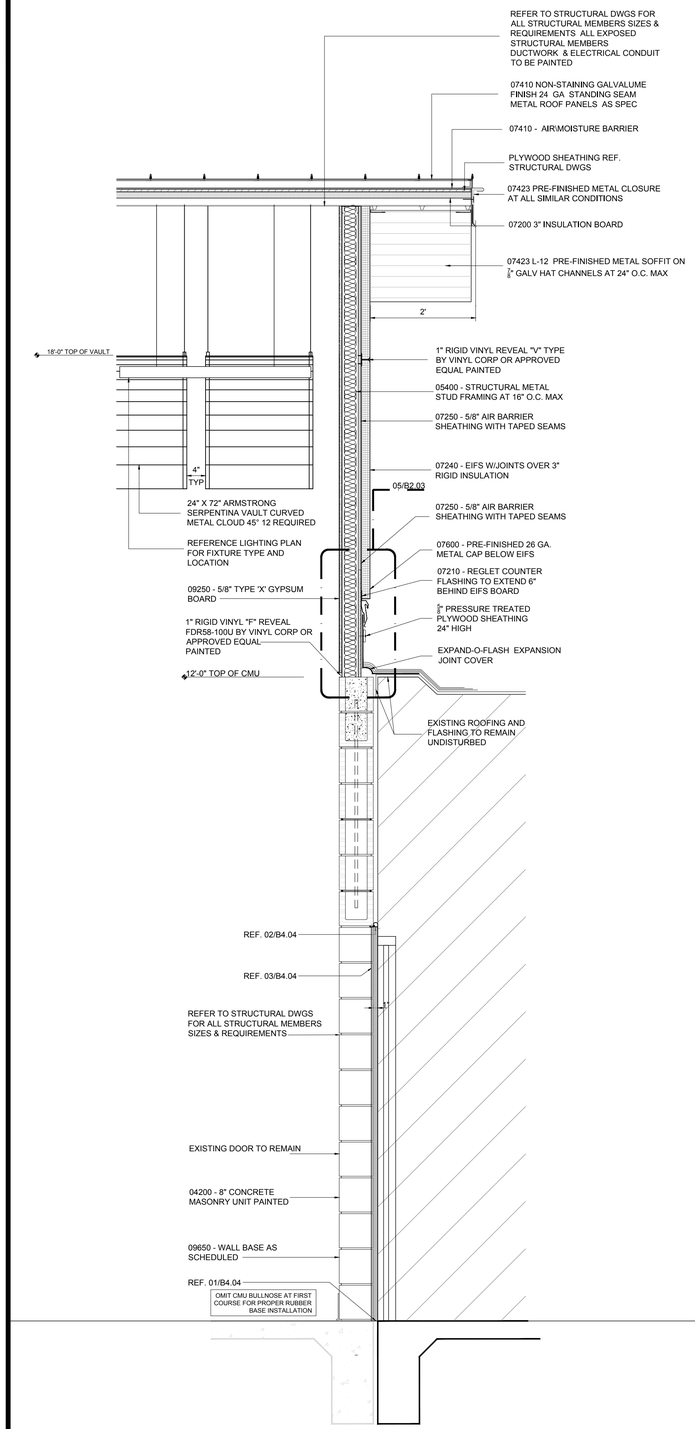

04 WALL SECTION

SCALE 3/4" = 1'-0"

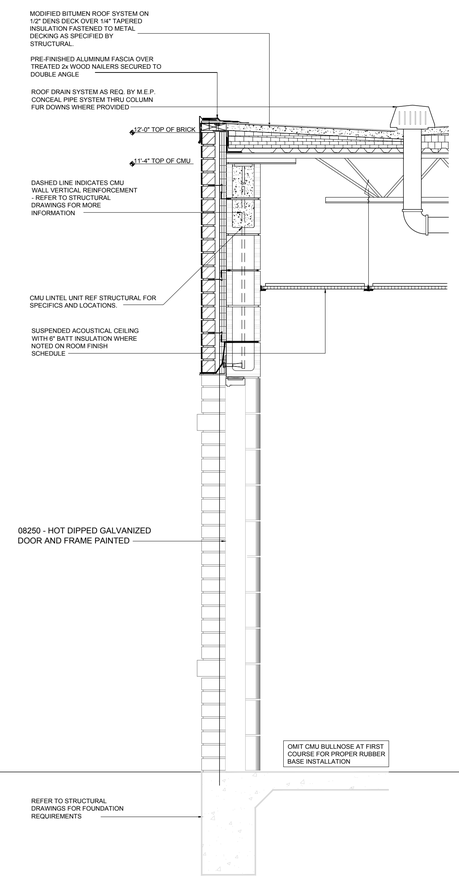

03 WALL SECTION

SCALE 3/4" = 1'-0"

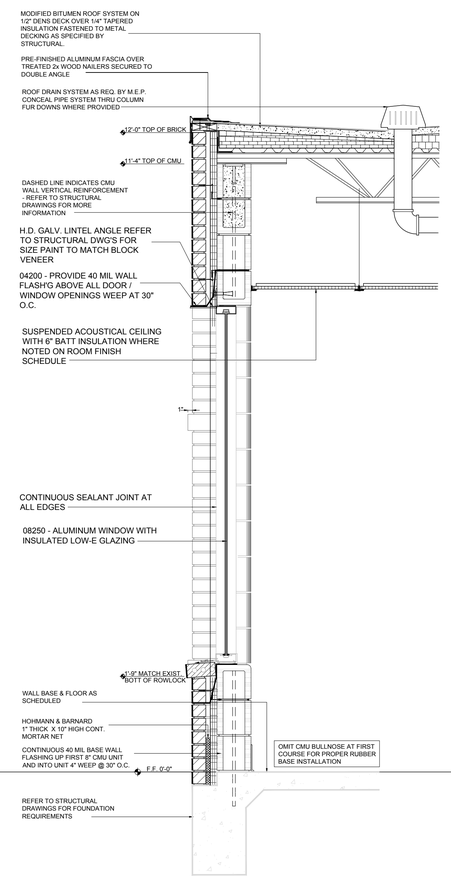

02 WALL SECTION

SCALE 3/4" = 1'-0"

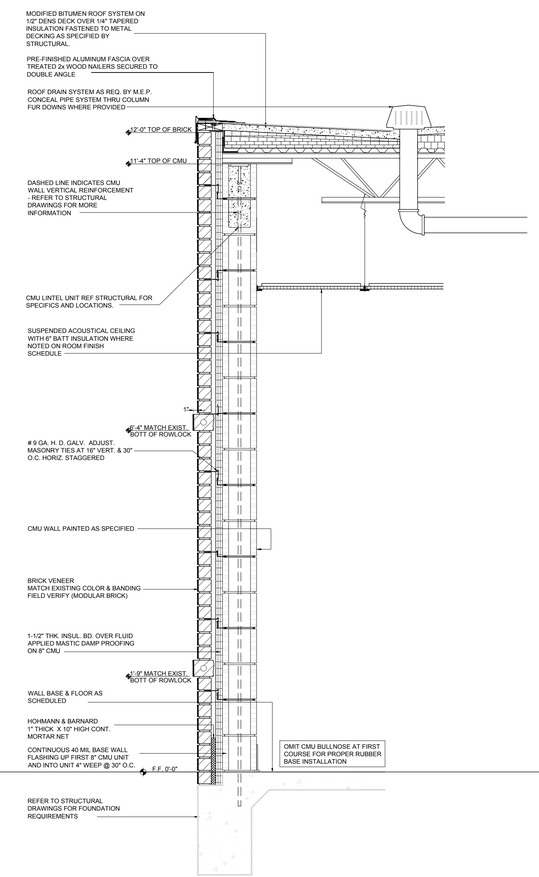

01 WALL SECTION

SCALE 3/4" = 1'-0"

No.	REVISIONS	BY

GMS ARCHITECTS

1150 paredes line rd.
brownsville
texas 78526
(956) 546-0110
fax (956) 546-0196

RFCSP-0819-NEHSSL

TEXAS

SAN BENITO CISD
ADDITIONS AND RENOVATIONS AT SAN BENITO HS AND SULLIVAN ELEMENTARY
RFCSP-0819-NEHSSL

SAN BENITO

BID PACKAGE "B"
SAN BENITO SULLIVAN

REGISTERED ARCHITECT ROMAN GABRIEL GOMEZ 12/13/19 33625 STATE OF TEXAS

COPYRIGHT 2019
GOMEZ MENDEZ SAENZ INC.
ARCHITECTS-PLANNERS

DATE	MAY, 2019
SCALE	As Shown
DRAWN	R GOMEZ IO
JOB	S5001119
SHEET	B4.03

C:\Users\Station 9\Dropbox\S5001119 SBISD HS & Sullivan\Sullivan\X Sullivan ref-master plan.dwg

PARTITION TYPES GENERAL NOTES

1. REFER TO FLOOR PLANS FOR LOCATION OF PARTITION TYPES.
2. REFER TO SCHEDULES & DETAILS FOR FINISHES,
3. REFER TO STRUCTURAL FOR METAL STUD FRAMING DESIGN REQUIREMENTS.
4. ALL GYPSUM WALLBOARD SHALL BE 5/8", TYPE "X", UNLESS NOTED OTHERWISE.
5. PROVIDE MOISTURE RESISTANT GYPSUM WALLBOARD AT TOILET/SHOWER WALLS AND THROUGHOUT KITCHEN, UNLESS NOTED OTHERWISE.
6. PROVIDE CEMENT TILE BACKER BOARD BEHIND ALL WALL TILE WAINSCOTS, IN LIEU OF M.R. WALLBOARD.
7. PROVIDE HI-IMPACT GYPSUM WALLBOARD AT ALL INTERIOR HALLWAYS, CORRIDORS, ETC., UNLESS NOTED OTHERWISE. PROVIDE HI-IMPACT BOARD TO A HEIGHT OF 8'-0" AFF AND THEN CONTINUE THE REMAINDER OF THE WALL WITH TYPE 'X' WALLBOARD TO DECK.
8. APPROPRIATE SUBMITTAL INFORMATION MUST BE PROVIDED TO SUBSTANTIATE THAT THE MATERIALS AND ASSEMBLY USED BY THE CONTRACTOR HAVE BEEN TESTED BY A RECOGNIZED TESTING AGENCY TO MEET THE FIRE RESISTANCE RATING SCHEDULED ON THESE PARTITION TYPES. SEE SPECIFICATION SECTION 08250.
9. REVIEW PLANS AND PROVIDE BACKING AND BRACING IN PARTITIONS AS REQUIRED FOR CASEWORK, WALL MOUNTED BOARDS, VERTICAL DUCT WORK AND ANY EQUIPMENT ETC. IF WOOD BLOCKING IS REQUIRED PROVIDE FIRE RETARDANT TREATED WOOD BLOCKING.
10. SOUND ATTENUATION BLANKETS SHALL EXTEND FULL HEIGHT OF PARTITIONS TO DECK.
11. ALL DOOR/WINDOW JAMBS & HEADERS IN MTL. STUD WALLS SHALL BE DOUBLE STUDDED.
12. PROVIDE WALLBOARD CONTROL JOINTS AT EACH COLUMN LOCATION AND WALL OPENINGS, TYPICAL BOTH FACES. PROVIDE CONTROL JOINTS AT WALL MIDPOINTS IN CONTINUOUS WALL LENGTHS OVER 30'-0".
13. ALL EXPOSED OUTSIDE CORNERS TO RECEIVE CORNER GUARDS AS SPECIFIED.
14. ALTHOUGH ALL INTERIOR PARTITIONS ON THIS SHEET ARE DRAWN TO SIMILAR HEIGHT IT IS RESPONSIBILITY OF THE CONTRACTOR TO RESEARCH ALL INTERIOR PARTITION WALL HEIGHTS FROM FINISHED FLOOR TO UNDERSIDE OF ROOF DECK.
15. PROVIDE WOOD BLOCKING AT ALL PROJECTOR, HANDRAIL, GRAB BAR AND CABINET LOCATIONS. 12" WIDE, 16 GAUGE STRAP SUPPORTS ARE ACCEPTABLE AT ALL OTHER BLOCKING LOCATIONS.

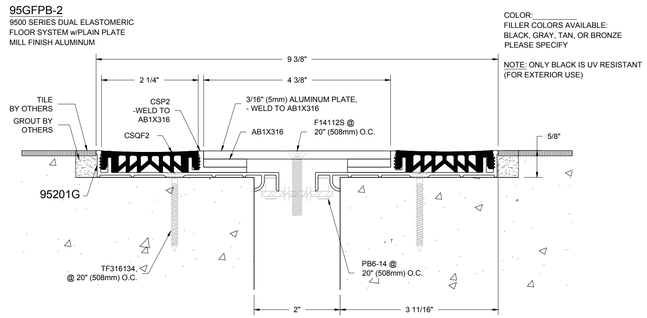

01 PLAN DETAIL

SCALE: NTS

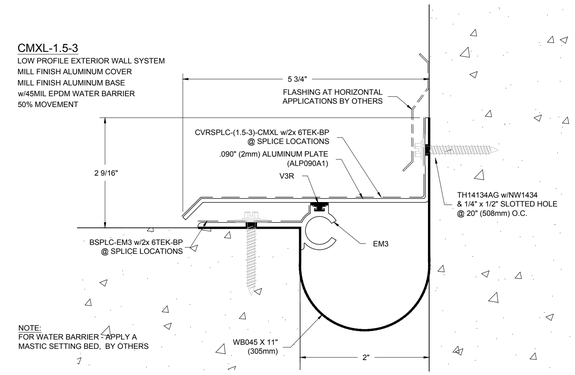

02 PLAN DETAIL

SCALE: NTS

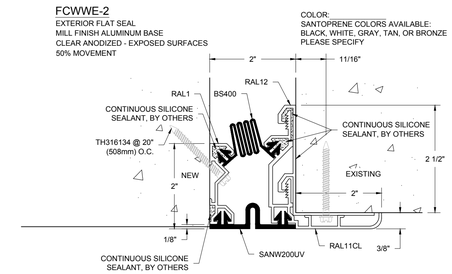

03 PLAN DETAIL

SCALE: NTS

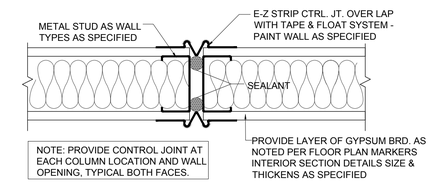

03 PARTITION DETAILS

SCALE: NTS

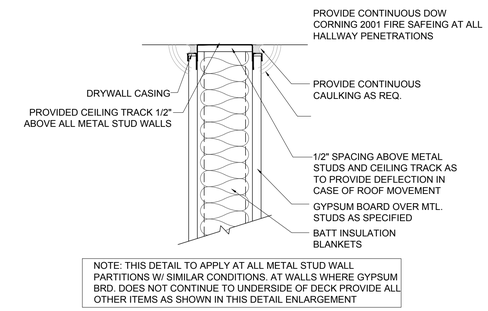

04 PARTITION DETAILS

SCALE: NTS

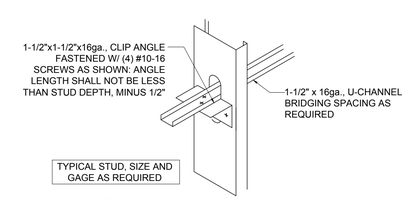

05 BRACING DETAIL

SCALE: NTS

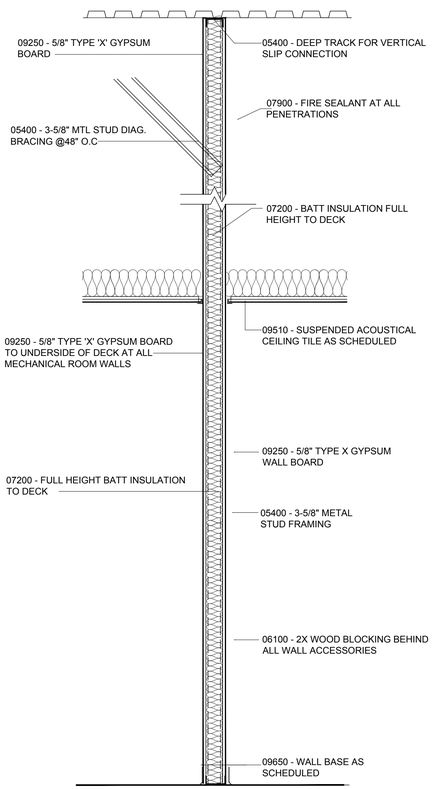

WALL SECTION A

SCALE 3/4" = 1'-0" AT MECHANICAL ROOM WALLS 3 5/8" STUD

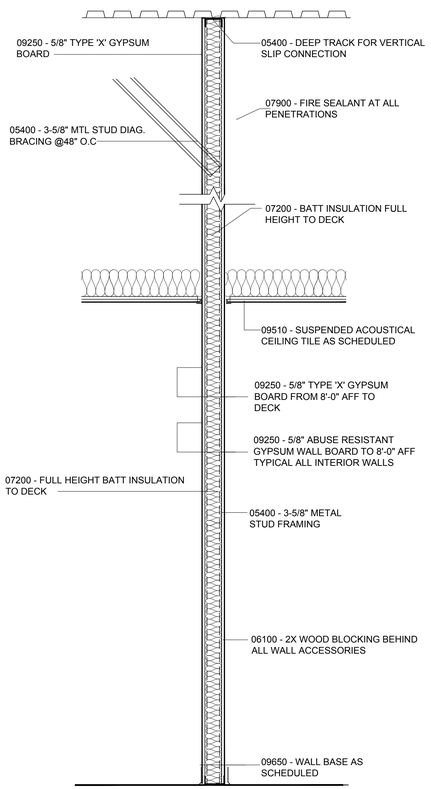

WALL SECTION B

SCALE 3/4" = 1'-0" AT INTERIOR WALLS

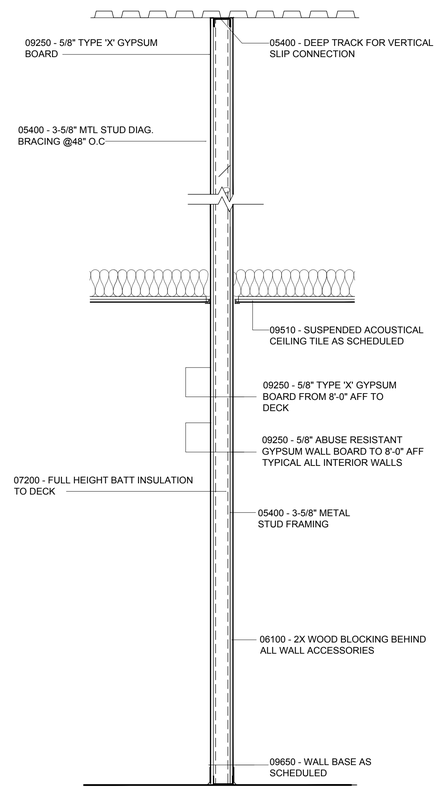

WALL SECTION C

SCALE 3/4" = 1'-0" AT WALL FURRING AT COLUMNS OR DOWNSPOUTS

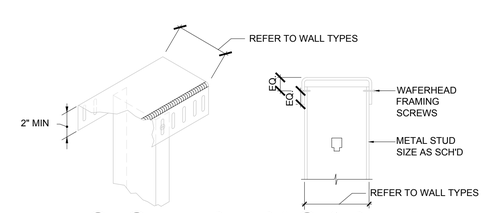

06 SLOTTED TRACK DETAIL

SCALE: NTS

No.	REVISIONS	BY

GMS ARCHITECTS
1150 paredes line rd.
brownsville
texas 78526
(956) 546-0110
fax (956) 546-0196

RFCSP-0819-NEHSSL

SAN BENITO CISD
ADDITIONS AND RENOVATIONS AT SAN BENITO HS AND
SULLIVAN ELEMENTARY
RFCSP-0819-NEHSSL

SAN BENITO TEXAS

BID PACKAGE
"B"
SAN BENITO
SULLIVAN

REGISTERED ARCHITECT
ROMI GABRIEL MENDEZ
12/4/19
23625
STATE OF TEXAS

COPYRIGHT 2019
GOMEZ MENDEZ SAENZ INC.
ARCHITECTS-PLANNERS

DATE	MAY, 2019
SCALE	As Shown
DRAWN	R GOMEZ IO
JOB	S5001119
SHEET	B4.04

C:\Users\Station 9\Dropbox\S5001119 SBISD HS & Sullivan\Sullivan\X Sullivan ref-master plan.dwg

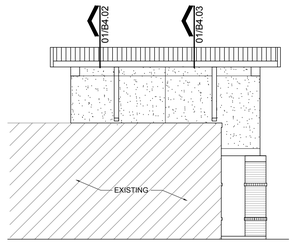

03 WEST ELEVATION
SCALE: 1/8" = 1'-0"

PLAN NORTH

02 SOUTH ELEVATION
SCALE: 1/8" = 1'-0"

PLAN NORTH

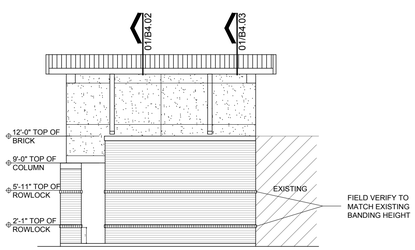

04 EAST ELEVATION
SCALE: 1/8" = 1'-0"

PLAN NORTH

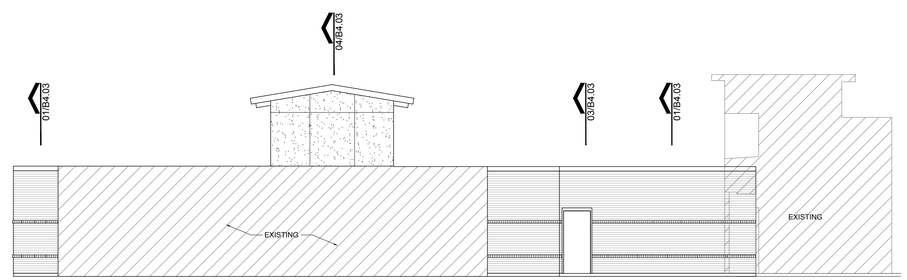

01 NORTH ELEVATION
SCALE: 1/8" = 1'-0"

PLAN NORTH

No.	REVISIONS	BY

GMS ARCHITECTS

1150 paredes line rd.
brownsville
texas 78526
(956) 546-0110
fax (956) 546-0196

RFCSP-0819-NEHSSL

SAN BENITO CISD
ADDITIONS AND RENOVATIONS AT SAN BENITO HS AND
SULLIVAN ELEMENTARY
RFCSP-0819-NEHSSL

SAN BENITO TEXAS

BID PACKAGE
"B"
SAN BENITO
SULLIVAN

REGISTERED ARCHITECT
RAMIRO GABRIEL GOMEZ JR.
23625
STATE OF TEXAS
6/12/19

COPYRIGHT 2019
GOMEZ MENDEZ SAENZ INC.
ARCHITECTS-PLANNERS

DATE	MAY, 2019
SCALE	As Shown
DRAWN	R GOMEZ IO
JOB	S5001119
SHEET	B5.01

GENERAL STRUCTURAL NOTES

THESE GENERAL NOTES SHALL APPLY UNLESS OTHERWISE SPECIFICALLY NOTED ON PLANS OR DETAILS. THE CONTRACTOR SHALL VERIFY ALL DIMENSIONS AND SHALL COORDINATE ALL STRUCTURAL PLANS AND DETAILS WITH ARCHITECTURAL & MECHANICAL DRAWINGS BEFORE STARTING WORK. THE ENGINEER SHALL BE NOTIFIED OF ANY DISCREPANCIES PRIOR TO CONSTRUCTION. THE ENGINEER ASSUMES NO RESPONSIBILITY FOR CONTRACTOR MEANS AND METHODS OF CONSTRUCTION OR SITE SAFETY. DESIGN, CONSTRUCTION, WORKMANSHIP AND MATERIALS SHALL COMPLY WITH THE CONTROLLING PROVISIONS OF THE 2012 EDITION OF THE **INTERNATIONAL BUILDING CODE (IBC).**

DESIGN CRITERIA

1. BASIS FOR DESIGN AND CODE COMPLIANCE

   A. GOVERNING BUILDING CODE..IBC 2012 EDITION

2. WIND DESIGN BASED ON THE GREATER OF:

   A. ASCE 7–10 REQUIREMENTS
   ULTIMATE DESIGN WIND SPEED..150 MPH (Vasd=116 MPH)
   RISK CATEGORY..III
   WIND EXPOSURE CATEGORY...B
   INTERNAL PRESSURE COEFFICIENT (GCpi)..........................+/–0.18
   Kzt...1.0
   Kd..0.85

   B. ASCE 7–05 REQUIREMENTS
   SERVICE DESIGN WIND SPEED...110 MPH
   IMPORTANCE FACTOR..1.15
   WIND EXPOSURE CATEGORY...B
   INTERNAL PRESSURE COEFFICIENT (GCpi)..........................+/–0.18
   Kzt...1.0
   Kd..0.85

3. GRAVITY DESIGN

   A. ROOF:
   DEAD LOAD..SELF–WEIGHT OF STRUCTURE & ROOFING SYSTEM
   LIVE LOAD..20 PSF
   ADDITIONAL POINT LOADS ....AS NOTED ON DRAWINGS

4. THESE BUILDINGS ARE DESIGNED TO MEET ASCE 7–05 & ASCE 7–10 WIND PRESSURES. ALL COMPONENTS AND CLADDINGS (E.G. WINDOWS, DOORS, ARCHITECTURAL SIDINGS AND ROOFING); MUST MEET MINIMUM WIND CODE REQUIREMENTS. IN ADDITION, GLAZED EXTERIOR OPENINGS IN THE LOWER 60 FEET OF THE BUILDING SHALL BE IMPACT RESISTANT MEETING ASTM E 1996 FOR LARGE MISSILES OR PROTECTED WITH AN IMPACT RESISTANT COVERING.

5. THE GENERAL CONTRACTOR MUST SUBMIT COMPONENT AND CLADDING WIND PRESSURE & IMPACT RESISTANCE RATINGS AND REQUIRED ATTACHMENT PROCEDURES TO THE STRUCTURAL ENGINEER FOR REVIEW. SUBMITTAL INFORMATION SHALL INCLUDE A THIRD PARTY TESTING REPORT OF THE SUBMITTED ASSEMBLY; REFERENCE EXTERIOR COMPONENTS & CLADDINGS NOTES FOR ADDITIONAL REQUIREMENTS. THE GENERAL CONTRACTOR SHALL CONTACT THE STRUCTURAL ENGINEER TO COORDINATE AND SCHEDULE REQUIRED PERIODIC INSPECTION OF EXTERIOR COMPONENTS AND CLADDINGS.

6. THE GENERAL CONTRACTOR IS RESPONSIBLE FOR PROVIDING CONSTRUCTION SERVICES AS NEEDED TO SATISFY THE REQUIREMENTS OF THE DRAWINGS, THE SPECIFICATIONS, THE REFERENCED BUILDING CODE AND THE TEXAS DEPARTMENT OF INSURANCE WINDSTORM INSPECTION PROGRAM. ALL CONSTRUCTION ADMINISTRATION COSTS ASSOCIATED WITH SUBMITTAL PREPARATION, SUBMITTAL REVIEW, INSPECTION COORDINATION, INCLUDING ALL GENERAL CONDITIONS, OVERHEAD AND PROFIT, SHALL BE INCLUDED IN THE GENERAL CONTRACTOR'S BID.

FOUNDATION DESIGN CRITERIA

1. FOUNDATION DESIGN IS IN ACCORDANCE WITH THE INTERNATIONAL BUILDING CODE, AND IS BASED ON THE VALUES RECOMMENDED IN TABLE 1806.2–PRESUMPTIVE LOAD–BEARING VALUES, AS LISTED BELOW:

   VERTICAL FOUNDATION PRESSURE ....1,500 PSF

   LATERAL BEARING PRESSURE ....100 PSF / FT BELOW GRADE

2. A GEOTECHNICAL ENGINEER OF RECORD SHALL BE RETAINED TO VERIFY THE ASSUMED PROPERTIES LISTED ABOVE.

FOUNDATION NOTES

1. REMOVE **AT LEAST 42 INCHES,** OF THE EXISTING SITE SOIL, VEGETATION, TREE ROOTS, DEBRIS, ETC., FROM THE PROPOSED BUILDING AREA TO A DISTANCE OF 5'–0" OUTSIDE THE BUILDING AREA (EXTERIOR OF THE FOUNDATION, INCLUDING ATTACHED IMPROVEMENTS SUCH AS SIDE WALKS AND CANOPIES). DEPTH OF REMOVAL SHALL BE VERIFIED BY THE GEOTECHNICAL ENGINEER AT THE TIME OF CONSTRUCTION.

2. AFTER TOP SOIL HAS BEEN REMOVED, THE SUBGRADE SHALL BE PROOF–ROLLED WITH APPROPRIATE CONSTRUCTION EQUIPMENT WEIGHING AT LEAST 20 TONS UNTIL THE GRADE OFFERS A RELATIVELY UNYIELDING SURFACE. SOFT SOIL AND YIELDING AREAS, AND AREAS WHERE TREE ROOTS HAVE BEEN REMOVED, SHALL BE OVER EXCAVATED AND REPLACED WITH COMPACTED SELECT FILL IN ACCORDANCE WITH THE REQUIREMENTS BELOW. ALTERNATIVELY, SOFT SOIL AND YIELDING AREAS MAY BE TREATED WITH HYDRATED LIME OR PORTLAND CEMENT PER THE GEOTECHNICAL REPORT REQUIREMENTS.

3. PROOFROLLING OPERATIONS AND EXCAVATION/BACKFILL ACTIVITIES SHOULD BE PERFORMED DURING A PERIOD OF DRY WEATHER AND OBSERVED BY THE GEOTECHNICAL ENGINEER OR HIS REPRESENTATIVE TO DOCUMENT SUBGRADE CONDITIONS AND PREPARATION. IF SUBGRADE SOILS ARE ALLOWED TO BECOME WET OR SATURATED, REMOVAL AND REPLACEMENT OF SOFT SOILS OR LIME STABILIZATION PROCEDURES SHALL BE PERFORMED AT THE CONTRACTOR'S EXPENSE. THE GEOTECHNICAL ENGINEER SHALL BE CONTACTED FOR ADDITIONAL RECOMMENDATIONS, IF REQUIRED.

4. SCARIFY, MOISTURE CONDITION, AND COMPACT THE TOP 6" OF THE EXPOSED SUBGRADE TO 98% OF STANDARD PROCTOR MAXIMUM DRY DENSITY AT OPTIMUM TO +3% ABOVE THE OPTIMUM MOISTURE CONTENT, IN ACCORDANCE WITH TEST METHOD ASTM D–698. MOISTURE CONTENT SHALL BE AS NOTED IMMEDIATELY PRIOR TO PLACING SELECT FILL.

5. RESTORE GRADE USING SELECT FILL, **MINIMUM OF 42 INCHES** OR AS REQUIRED TO PROVIDE THE SPECIFIED **FINISH FLOOR ELEVATION,** WHICHEVER IS GREATER, AND PROPER SITE DRAINAGE, COMPACTED IN ACCORDANCE WITH THE REQUIREMENTS BELOW. FINISH FLOOR ELEVATIONS SHALL BE VERIFIED WITH ARCHITECT AND CIVIL ENGINEER.

6. SELECT FILL SHALL BE COMPACTED IN THE FIELD IN LIFTS NOT TO EXCEED 8" LOOSE MEASURE (6" COMPACTED LIFT) TO A MINIMUM OF 98% OF STANDARD PROCTOR MAXIMUM DRY DENSITY AT –2% TO +2% OF THE OPTIMUM MOISTURE CONTENT, AS EVALUATED BY ASTM D–698.

7. SELECT FILL MATERIALS SHALL BE CLAYEY SAND (SC), CLAYEY GRAVEL (GC) OR LEAN CLAY (CL), AND COMBINATIONS OF THESE SOILS, WHEN CLASSIFIED IN ACCORDANCE WITH USCS ASTM D2487. SELECT FILL SHALL HAVE A LIQUID LIMIT (LL) LESS THAN 35%, A PLASTICITY INDEX (PI) BETWEEN 7–17 AND NO PARTICLES LARGER THAN 2" IN DIAMETER. IF BLENDED OR MIXED SOILS ARE INTENDED FOR USE, THE GEOTECHNICAL ENGINEER SHOULD BE CONTACTED TO PROVIDE ADDITIONAL RECOMMENDATIONS AND REQUIREMENTS, INCLUDING APPROVAL TO UTILIZE BLENDED OR MIXED SOILS.

8. FOUNDATION CONCRETE SHALL NOT BE PLACED ON SELECT FILL SOILS THAT HAVE BEEN DISTURBED BY RAINFALL OR WATER SEEPAGE. IF BEARING SOILS ARE SOFTENED BY WATER INTRUSION, OR BY DESICCATION, THE UNSUITABLE SOILS SHALL BE REMOVED FROM THE FOUNDATION EXCAVATION AND BE REPLACED WITH PROPERLY COMPACTED SELECT FILL PRIOR TO PLACEMENT OF FOUNDATION CONCRETE. ALL SOIL REMOVAL AND REPLACEMENT COSTS, INCLUDING ASSOCIATED COSTS TO REMOVE AND REINSTALL REINFORCEMENT AND VAPOR BARRIER MATERIALS, SHALL BE THE SOLE RESPONSIBILITY OF THE GENERAL CONTRACTOR. DEPTH OF SOIL REMOVAL AND RECOMPACTION REQUIREMENTS SHALL BE COORDINATED WITH THE GEOTECHNICAL ENGINEER.

9. SAMPLES OF PROPOSED SELECT FILL SHALL BE FURNISHED TO THE TESTING LABORATORY 7 DAYS PRIOR TO INSTALLATION TO PERMIT TIME FOR SPECIFICATION COMPLIANCE INSPECTION AND REVIEW BY THE GEOTECHNICAL ENGINEER.

10. LABORATORY MOISTURE–DENSITY CURVES SHALL BE DEVELOPED FOR SUBGRADE AND FILL. PROCTOR CURVES AND FIELD DENSITY TESTS SHALL BE SUBMITTED TO THE ENGINEER FOR REVIEW. A MINIMUM OF ONE (1) IN PLACE DENSITY TEST PER 2,000 SQUARE FEET OF SLAB AREA SHALL BE TAKEN ON EACH LIFT DURING PLACEMENT OF SELECT FILL. DENSITY REPORTS SHALL BE TRANSMITTED TO ENGINEER WITHIN 3 DAYS AFTER TESTS ARE MADE.

FOUNDATION NOTES CONTINUED:

11. GRAIN SIZE ANALYSIS AND ATTERBERG LIMITS TESTS SHALL BE PERFORMED DURING FILL PLACEMENT AT A RATE OF ONE TEST PER 2,000 CUBIC YARDS OF FILL BROUGHT TO THE SITE. SAMPLES FOR TEST SHALL BE TAKEN FROM JOBSITE MATERIALS.

12. SITE SHALL BE GRADED SO THAT WATER DOES NOT POND WITHIN 10 FEET OF THE PERIMETER FOUNDATION BEAM DURING OR AFTER CONSTRUCTION. THE SLOPE OF THE GROUND SURFACE AWAY FROM THE STRUCTURE SHOULD BE A MINIMUM OF FIVE (5%) PERCENT FOR A DISTANCE OF AT LEAST TEN (10') FEET. ELEVATION OF GROUND SURFACE ADJACENT TO THE FOUNDATION SHOULD BE AT LEAST 6 INCHES BELOW FINISH FLOOR.

13. FINAL DRAINAGE IS VERY IMPORTANT TO THE PERFORMANCE OF THE FOUNDATION. LANDSCAPING, PLUMBING, AND DOWNSPOUT DRAINAGE ARE ALSO VERY IMPORTANT. IT IS VITAL THAT ALL ROOF DRAINAGE BE TRANSPORTED AWAY FROM BUILDINGS SO THAT NO AREAS OF WATER POND AROUND BUILDINGS, WHICH CAN RESULT IN SOIL VOLUME CHANGE UNDER THE FOUNDATION. PLUMBING LEAKS SHOULD BE REPAIRED AS SOON AS POSSIBLE IN ORDER TO MINIMIZE THE MAGNITUDE OF MOISTURE CHANGE UNDER THE SLAB. LARGE TREES AND SHRUBS SHOULD NOT BE PLANTED IN THE IMMEDIATE VICINITY OF THE STRUCTURE, SINCE THE ROOT SYSTEMS CAN CAUSE A SUBSTANTIAL REDUCTION IN SOIL VOLUME IN THE VICINITY OF THE TREE DURING DRY PERIODS. BUSHES AND TREES SHOULD BE PLANTED A REASONABLE DISTANCE AWAY FROM THE STRUCTURE SO THAT THEIR CANOPY OR "DRIP LINE" DOES NOT EXTEND BEYOND THE PERIMETER OF THE FOUNDATION. WATERING OF VEGETATION SHOULD BE PERFORMED IN A TIMELY AND CONTROLLED MANNER. PROLONGED WATERING SHOULD BE AVOIDED.

CONCRETE:

1. ALL CONCRETE WORK SHALL CONFORM TO THE AMERICAN CONCRETE INSTITUTE SPECIFICATION, A.C.I. #301 AND BUILDING CODE REQUIREMENTS, A.C.I. #318, LATEST EDITION.

2. ALL DETAILING, FABRICATION AND ERECTION OF REINFORCING BARS, UNLESS OTHERWISE NOTED, MUST FOLLOW THE A.C.I. "MANUAL OF STANDARD PRACTICE FOR DETAILING REINFORCED CONCRETE", A.C.I. #315, LATEST EDITION.

3. CONCRETE SHALL HAVE A MINIMUM COMPRESSION STRENGTH OF 3,000 PSI AT 28 DAYS.

4. A MAXIMUM OF 25% FLYASH MAY BE USED AS A CEMENT SUBSTITUTE AND SHALL CONFORM TO ASTM C618, CLASS C. THE WATER/CEMENT RATIO SHALL NOT EXCEED 0.6 AND SLUMPS SHALL BE 5 INCHES (±1 INCH). AGGREGATE SHALL BE WELL–GRADED, 1" MAXIMUM FOR THE SLAB ON GRADE, 1" MAXIMUM FOR CAST–IN–PLACE BEAMS AND ABOVE GRADE SLABS. COARSE AGGREGATE SHALL MEET ASTM C33, GRADATION #57. A QUALIFIED TESTING LABORATORY SHALL BE RETAINED TO FURNISH MIX DESIGNS FOR ALL CLASSES OF CONCRETE. A SAMPLE OF FOUR CYLINDERS SHALL BE TAKEN NOT LESS THAN ONCE A DAY, NOR LESS THAN ONCE FOR EACH 100 YD3 OF CONCRETE. ONE CYLINDER SHALL BE TESTED AT 7 DAYS AND TWO AT 28 DAYS. THE FOURTH CYLINDER MAY BE DISPOSED OF AFTER 45 DAYS IF NOT USED.

5. ADMIXTURES CONTAINING WATER SOLUBLE CHLORIDE IONS GREATER THAN 0.06% BY WEIGHT OF CEMENT SHALL NOT BE USED.

6. REINFORCING BARS SHALL BE NEW BILLET STEEL CONFORMING TO ASTM A–615, GRADE 60. #3 BARS MAY BE GRADE 40.

7. WELDED WIRE FABRIC SHALL BE ASTM A185.

8. STANDARD PROTECTIVE COVER OF REINFORCING BARS UNLESS OTHERWISE NOTED SHALL BE:

   WHERE CAST AGAINST DIRT OR FILL .... 3 IN.
   EXPOSED TO EARTH OR WEATHER .... 2 IN.
   SLABS AND WALLS .... 1 IN.
   OTHER .... 1–1/2 IN.

9. ALL ACCESSORIES SHALL BE IN ACCORDANCE WITH THE A.C.I. "MANUAL OF STANDARD PRACTICE FOR DETAILING REINFORCED CONCRETE", A.C.I. #315, LATEST EDITION.

10. SLAB MAT TO BE SUPPORTED BY MASONRY BRICK BATTS (MIN OF 1/2 BRICK) SPACED AT 4 FEET ON CENTER EACH WAY (MAX). BEAM CAGES SUPPORTED BY BATTS AT 4 FEET ON CENTER.

11. VERTICAL CONSTRUCTION JOINTS IN FLOOR SHALL BE COORDINATED WITH STRUCTURAL ENGINEER PRIOR TO FORMING SLAB. CRACK CONTROL JOINTS SHALL BE PROVIDED AT LOCATIONS SHOWN ON THE PLANS. CONTROL JOINTS SHALL BE SAWCUT (IMMEDIATELY SUBSEQUENT TO FINISHING SLAB) WITH "SOFF–CUT" SYSTEM. JOINTS SHALL BE CLEANED AND FILLED WITH "SONOLASTIC SL1" WITHIN TWO (2) DAYS AFTER SAWCUTTING. NO HORIZONTAL JOINTS WILL BE PERMITTED IN SLABS OR BEAMS UNLESS APPROVED BY THE ENGINEER.

12. PROVIDE 2 TOP & BOTTOM CORNER BARS AT ALL DISCONTINUOUS GRADE BEAMS AND FOUNDATION CORNERS. CORNER BARS SHALL BE 4'–0" IN LENGTH (2'–0" LEGS). SIZE OF THE CORNER BARS SHALL MATCH THE SIZE OF THE GRADE BEAM REINFORCING AS SHOWN BY STRUCTURAL DRAWINGS.

13. MAINTAIN A MINIMUM OF ONE AND ONE–HALF (1–1/2) TIMES THE MAXIMUM COARSE AGGREGATE SIZE BETWEEN ALL REINFORCING BARS (EXCEPT AT LAPS).

14. BARS SCHEDULED OR DETAILED "CONT" SHALL BE LAPPED 62 BAR DIAMETERS (36 INCHES MINIMUM) UNLESS OTHERWISE NOTED.

15. WHERE CONCRETE IS TO HAVE UNEXPOSED SURFACES, THE FORMS MAY BE CONSTRUCTED OF #2 LUMBER OR BETTER. WHERE SURFACES ARE EXPOSED, SUCH AS FOR FINISH PAINTING OR STUCCO DASH, THE FORMS SHALL BE COMMERCIAL STANDARD DOUGLAS FIR, MOISTURE–RESISTANT CONCRETE FORM PLYWOOD; MINIMUM 5–PLY AND AT LEAST 9/16" THICK, OR FORMS LINED WITH COMMERCIAL STANDARD DOUGLAS FIR, CONCRETE FORM EXTERIOR, 3–PLY, NOT LESS THAN 1/4" THICK. WHERE CONCRETE IS EXPOSED, A SMOOTH SURFACE IS REQUIRED, FREE FROM FINS, HONEYCOMB, FORM MARKS OR OTHER DEFECTS.

16. EXPOSED SURFACES OF CONCRETE AT THE PERIMETER OF THE FOUNDATION SHALL BE FORMED WITH 2X10 #2 LUMBER OR BETTER. A SMOOTH SURFACE IS REQUIRED, FREE FROM FINS, HONEYCOMB, FORM MARKS OR OTHER DEFECTS.

17. CONSTRUCT FORMS SO THAT JOINTS ARE LEAKPROOF. MAINTAIN FORMS SUFFICIENTLY RIGID TO PREVENT DEFORMATION UNDER LOAD.

18. CONCRETE MAY BE PLACED WITH CHUTES UP TO 25' MAXIMUM. SLUMP SHALL NOT EXCEED 6" AT TRUCK DISCHARGE POINT.

19. CONCRETE PLACED BY PUMPING SHALL MEET THE FOLLOWING REQUIREMENTS:

    A. COARSE AGGREGATE SHALL BE GRADED FROM A MAXIMUM OF 1" DOWN

    B. MAXIMUM ALLOWABLE INCREASE IN CEMENT FACTOR SHALL BE 1/2 SACK PER CUBIC YARD OVER NORMAL MIX DESIGN.

    C. MAXIMUM WATER CEMENT RATIO SHALL BE 7–1/2 GALLONS PER SACK OF CEMENT. IF MORE WORKABILITY IS REQUIRED, AN ADMIXTURE MAY BE USED.

    D. MAXIMUM WEIGHT RATIO OF FINE AGGREGATES TO COARSE AGGREGATES SHALL NOT EXCEED 2/3.

    E. REFER TO A.C.I. #301, LATEST EDITION, SECTION 800, FOR OTHER PUMPING REQUIREMENTS.

    F. IN NO CASE SHALL CONCRETE BE PUMPED THROUGH AN ALUMINUM TUBE.

    G. SLUMP SHALL NOT EXCEED 6" AT TRUCK DISCHARGE POINT.

20. FLOOR FINISH (TOLERANCES)

    A. STEEL TROWEL FINISH 1/8" IN 10'

    B. FLOAT FINISH 1/4" IN 10'

    C. SCRATCH FINISH 1/2" IN 10'

21. CONCRETE TO BE CURED IN ACCORDANCE WITH ACI RECOMMENDATIONS. PROPOSED METHOD OF CURING TO BE COORDINATED WITH ENGINEER PRIOR TO CONCRETE PLACEMENT.

22. SHOP DRAWINGS SHALL BE PREPARED FOR ALL REINFORCING STEEL AND SUBMITTED FOR REVIEW BY ENGINEER. SUBMITTALS SHALL INCLUDE ELECTRONIC (PDF) COPIES OF EACH DRAWING. ENGINEERING DRAWINGS SHALL NOT BE REPRODUCED AND USED AS SHOP DRAWINGS.

23. THE CONTRACTOR SHALL REVIEW AND ANNOTATE SHOP DRAWINGS BEFORE SUBMITTING THEM TO THE ARCHITECT/ENGINEER FOR REVIEW. THE CONTRACTOR SHALL ALLOW ARCHITECT/ENGINEER 10 WORKING DAYS FOR REVIEW OF SHOP DRAWINGS.

24. ENGINEER TO BE NOTIFIED 48 HOURS PRIOR TO PLACEMENT OF FOUNDATION AND OF STRUCTURAL CONCRETE TO SCHEDULE REQUIRED OBSERVATIONS.

CONCRETE CONTINUED:

25. INCLUDE IN BID AN ALLOWANCE FOR **0.5 TON** OF REINFORCING BARS TO BE USED AS DIRECTED IN FIELD FOR SPECIAL CONDITIONS AT A COST OF **$2,000.00 PER TON** (LABOR FOR PLACING SAME TO BE INCLUDED). ANY UNUSED ALLOWANCE WILL BE CREDITED TO THE OWNER AT THE END OF THE PROJECT.

CONCRETE MASONRY

1. THE **GENERAL CONTRACTOR, PROJECT SUPERINTENDENT, TESTING LABORATORY AND THE MASONRY FOREMAN** SHALL MEET WITH THE STRUCTURAL ENGINEER PRIOR TO THE START OF MASONRY WORK TO REVIEW PROJECT REQUIREMENTS AND PROCEDURES.

2. AN INDEPENDENT TESTING LAB SHALL VERIFY PLACEMENT OF VERTICAL REINFORCING IN WALLS AND HORIZONTAL REINFORCING IN BOND BEAMS AND LINTELS PRIOR TO PLACEMENT OF GROUT. INDEPENDENT TESTING LAB SHALL PROVIDE CONTINUOUS VISUAL OBSERVATIONS OF GROUTING PROCEDURES, REBAR PLACEMENT, SITE MIXING OF MORTAR, INSTALLATION OF EMBEDED STEEL CONNECTORS, AND GENERAL PLACEMENT OF MASONRY UNITS AND MORTAR JOINTS. INSPECTION REPORTS ARE TO BE GENERATED DAILY BY THE TESTING LAB. INSPECTION SUMMARY REPORTS SHALL BE EMAILED TO THE STRUCTURAL ENGINEER IN ELECTRONIC (PDF) FORMAT.

3. ALL CONCRETE MASONRY SHALL BE IN ACCORDANCE WITH THE REQUIREMENTS OF THE LOCAL BUILDING CODES AND THE AMERICAN CONCRETE INSTITUTE (ACI 530–02/ ASCE 5–02/ TMS 402–02). DESIGN IS BASED ON MASONRY COMPRESSIVE STRENGTH (f'm) OF 1,900 PSI.

4. HOT AND COLD WEATHER CONSTRUCTION PROCEDURES SHALL BE UTILIZED AS REQUIRED BY THE SPECIFICATIONS AND ACI 530.1.

5. HOLLOW CONCRETE MASONRY UNITS SHALL BE DOMESTIC LIGHTWEIGHT MOISTURE CONTROLLED TYPE I UNITS, CONFORMING TO ASTM C–90–97.

6. MASONRY UNITS SHALL HAVE A MINIMUM AVERAGE COMPRESSIVE STRENGTH OF 1,900 PSI (NET AREA) WHEN TESTED IN ACCORDANCE WITH ASTM C–140, "METHODS OF SAMPLING AND TESTING CONCRETE MASONRY UNITS".

7. MORTAR PROPORTIONS FOR REINFORCED MASONRY SHALL BE ESTABLISHED PER ASTM C270 PROPORTION SPECIFICATIONS, TYPE S USING MASONRY CEMENT. FIELD TESTS OF MORTAR SHALL BE PERFORMED BY A QUALIFIED TESTING LABORATORY IN ACCORDANCE WITH ASTM C780 AT A RATE OF ONE TEST PER 2,000 SF OF WALL SURFACE TO DETERMINE BATCH–TO–BATCH UNIFORMITY OF MORTAR. REFERENCE SPECIFICATIONS FOR NON REINFORCED MASONRY.

8. GROUT FOR ALL REINFORCED HOLLOW MASONRY UNIT WALLS SHALL HAVE A MINIMUM COMPRESSIVE STRENGTH OF 3,000 PSI WITH A MAXIMUM 3/8" AGGREGATE. A MID RANGE WATER REDUCING AGENT SUCH AS "POLYHEED" (MASTER BUILDERS) SHALL BE USED. SLUMP TO BE BETWEEN 8 AND 11 INCHES. **ALL GROUT SHALL BE PUMPED.** PLACING OF GROUT TO FOLLOW AMERICAN CONCRETE INSTITUTE (ACI) RECOMMENDATIONS REGARDING **LOW & HIGH LIFT GROUTING.** MAXIMUM LIFT OF GROUT SHALL NOT EXCEED 5'–0" UNLESS APPROVED BY THE ENGINEER PRIOR TO START OF GROUTING. GROUT TO BE TESTED BY A QUALIFIED TESTING LABORATORY AT A RATE OF ONE TEST PER 25 CY OF GROUT IN ACCORDANCE WITH ASTM C1019.

9. REINFORCING STEEL SHALL CONFORM TO ASTM A–615, GRADE 60. ALL BAR REINFORCING SHALL BE LAPPED 48 BAR DIAMETERS (MIN). BARS SHALL BE PLACED WITHIN 1/2" (CENTERLINE OF BAR TO FACE OF MASONRY) OF LOCATION SHOWN IN STRUCTURAL PLANS. BARS SHALL BE HELD IN POSITION DURING GROUTING WITH BAR POSITIONERS. POSITIONERS SHALL BE LOCATED AT THE BOTTOM AND TOP OF THE WALL AND AT 8 TO 10 FOOT INTERVALS. BARS SPLICED BY NON–CONTACT LAP SPLICES SHALL NOT BE SPACED TRANSVERSELY FARTHER APART THAN ONE–FIFTH THE REQUIRED LENGTH OF LAP NOR MORE THAN 8 INCHES.

10. VERTICAL BARS SHALL EXTEND TO THE TOP OF THE PARAPET WALL OR BOND BEAM WHEN A 16" DEEP BEAM IS SPECIFIED. HOOKED DOWELS SHALL BE PROVIDED AT ROOF BOND BEAMS (W/O PARAPETS) LESS THAN 16" DEEP. DOWELS SHALL BE 30" LONG WITH 12" HOOKS.

11. ALL EXTERIOR MASONRY WALLS SHALL BE REINFORCED WITH 9 GA. HOT DIPPED GALVANIZED HORIZONTAL WIRE REINFORCEMENT (LADDER TYPE) EMBEDDED IN MORTAR JOINTS AT 16" O.C. NOMINAL WIDTH OF JOINT REINFORCING SHALL EQUAL WALL THICKNESS. (INTERIOR WALLS MAY BE MILL GALVANIZED). WIRE REINFORCEMENT SHALL CONFORM TO ASTM DESIGNATION A–82, AND SHALL BE LAPPED AT LEAST 8" WITH AT LEAST ONE CROSS WIRE WITHIN THE LAP. JOINT REINFORCING SHALL BE INSTALLED IN THE FIRST AND SECOND MORTAR BED JOINTS IMMEDIATELY ABOVE AND BELOW ALL OPENINGS. WIRE REINFORCING SHALL BE DISCONTINUOUS AT CONTROL JOINTS.

12. EXTERIOR WALLS SHALL BE BONDED WITH CONCRETE MASONRY UNITS AT BUILDING CORNERS.

13. ONE GROUTED #5 BAR SHALL BE PROVIDED AROUND THE PERIMETER OF ALL WALL OPENINGS AND AT BUILDING CORNERS UNLESS NOTED OTHERWISE ON THE STRUCTURAL PLANS.

14. NEATLY TOOL INTERIOR AND EXTERIOR JOINTS IN MASONRY TO FORM A SLIGHTLY CONCAVE PROFILE WHEN MORTAR IS THUMBPRINT HARD UNLESS SHOWN OTHERWISE. ALL MORTAR JOINTS SHALL BE TOOLED THE ENTIRE HEIGHT OF WALL.

15. BOND BEAMS SHALL BE REINFORCED WITH TWO CONTINUOUS #5 BARS UNLESS NOTED OTHERWISE ON THE STRUCTURAL PLANS. REINFORCING SHALL BE CONTINUOUS AT ALL CORNERS AND INTERSECTING WALLS. (PROVIDE CORNER BARS). WHERE SIDE WALL AND END WALL BOND BEAMS DO NOT COURSE CONTINUE THE LOWER BOND BEAM AROUND THE BUILDING CORNER TO THE FIRST VERTICAL REINFORCED CELL.

16. CONTROL JOINTS SHALL BE CONSTRUCTED WITH SLOTTED MASONRY UNITS AND FACTORY MOLDED JOINT FILLER. JOINTS SHALL BE CAULKED WITH AN APPROVED MATERIAL. JOINTS SHALL BE PROVIDED AT MAXIMUM SPACING OF 22 FT. AND AT ALL LOCATIONS WHERE COLUMNS ARE PLACED IN CMU CELLS. (EXTERIOR AND INTERIOR WALLS). JOINT LOCATIONS, IF NOT SHOWN ON PLANS, SHALL BE COORDINATED WITH ARCHITECT.

17. CONTROL JOINTS SHALL NOT EXTEND THROUGH BOND BEAMS UNLESS INDICATED ON THE STRUCTURAL PLANS.

18. CONTROL JOINTS IN CMU WALLS SHALL NOT BE LOCATED CLOSER THAN 2'–0" FROM AN EDGE OF OPENING WITHOUT REVIEW OF STRUCTURAL ENGINEER.

19. COLUMNS WHICH EXTEND THROUGH BOND BEAMS SHALL BE WRAPPED WITH 2 LAYERS OF 30# BUILDING PAPER. REINFORCING SHALL BE CONTINUOUS PAST COLUMNS WHEN ADEQUATE CLEARANCE EXISTS.

20. LINTELS OVER ALL OPENINGS IN INTERIOR MASONRY PARTITIONS, NOT OTHERWISE COVERED, ARE TO BE OF STANDARD CMU LINTEL BLOCK WITH THICKNESS EQUAL TO WALL THICKNESS. DEPTH SHALL BE 8" FOR OPENINGS UP TO 6'–0", REINFORCED WITH TWO #5's, LOCATED 2–1/2" ABOVE THE BOTTOM EXTERIOR FACE OF THE UNIT.

21. AN L6x4x5/16 (LLH) CONT. (HD GALV) WITH 3/4"øx6" LONG EXP. BOLTS AT ALL FILLED CELLS (40" ON CENTER MAXIMUM) STEEL SHELF ANGLE SHOULD BE PROVIDED AT VENEER TRANSITION LOCATIONS AS REQUIRED BY THE ARCHITECT (COORDINATE SHELF ANGLE HEIGHTS AND LOCATIONS WITH ARCHITECT).

22. INCLUDE IN BID AN ALLOWANCE OF **0.5 TON** OF REINFORCING BARS TO BE USED AS DIRECTED IN FIELD FOR SPECIAL CONDITIONS AT A COST OF **$2,000.00 PER TON** (LABOR AND GROUT FOR PLACING SAME TO BE INCLUDED). ANY UNUSED ALLOWANCE WILL BE CREDITED TO THE OWNER AT THE END OF THE PROJECT.

STRUCTURAL STEEL

1. TOP OF BEAM/PLATE (TOB OR TOP) IS USED INTERCHANGEABLY ON PLANS. REFERENCE APPLICABLE SECTION FOR CLARIFICATION.

2. STRUCTURAL STEEL WIDE FLANGE MEMBERS SHALL CONFORM TO ASTM SPECIFICATION A 572 AND/OR ASTM A 992 (Fy = 50 KSI) UNLESS OTHERWISE SHOWN OR NOTED. PLATE AND ANGLES MAY BE A36 (Fy = 36 KSI).

3. ALL STRUCTURAL STEEL TUBING SHALL CONFORM TO ASTM SPECIFICATION A–500, GRADE B (Fy=46 KSI). STEEL PIPE SHALL COMPLY WITH ASTM A53 TYPE E OR S (Fy=35 KSI).

4. ALL STRUCTURAL STEEL SHALL BE DESIGNED, FABRICATED AND ERECTED IN ACCORDANCE WITH THE LATEST SPECIFICATIONS OF THE AMERICAN INSTITUTE OF STEEL CONSTRUCTION AND STEEL JOIST INSTITUTE.

5. ALL STEEL BAR JOISTS SHALL BE DESIGNED AND FABRICATED BY A MEMBER OF THE STEEL JOIST INSTITUTE. IF REQUESTED BY THE A/E, THE CONTRACTOR SHALL PROVIDE WRITTEN CERTIFICATE OF FABRICATOR'S MEMBERSHIP TO THE STEEL JOIST INSTITUTE AT TIME OF SHOP DRAWING SUBMITTAL.

6. BAR JOISTS SHALL BE BOLTED WHERE COLUMNS ARE FRAMED WITH STRUCTURAL STEEL MEMBERS IN ONLY ONE DIRECTION TO PROVIDE LATERAL STABILITY DURING CONSTRUCTION/ERECTION AS REQUIRED BY OSHA.

7. TOTAL LOAD DEFLECTION OF SPECIAL BAR JOIST SHALL NOT EXCEED L/240, UNLESS NOTED OTHERWISE.

STRUCTURAL STEEL CONTINUED:

8. JOIST MANUFACTURER SHALL PROVIDE BRIDGING AS REQUIRED TO ADEQUATELY BRACE JOISTS AGAINST LATERAL MOVEMENT AND NET UPLIFT OF 30 PSF.

9. ALL BOLTS SHALL BE 3/4 DIAMETER ASTM A325. WASHERS SHALL BE PROVIDED AT OVERSIZED HOLES AND AT SLOTTED CONNECTIONS AT EXPANSION JOINTS. A325 CONNECTIONS SHALL BE BEARING TYPE CONNECTIONS UNLESS NOTED OTHERWISE. ANCHOR BOLTS MAY BE ASTM A307 UNLESS NOTED OTHERWISE.

10. REFER TO ARCHITECTURAL & MECHANICAL PLANS FOR VERIFICATION OF ALL BOLTS, BLOCKING ANCHORS, ETC., FOR THE ANCHORAGE OF THEIR RESPECTIVE ITEMS.

11. ALL BEAMS AND COLUMNS SHALL BE FULL LENGTH WITHOUT SPLICES UNLESS INDICATED ON PLANS OR APPROVED BY THE ENGINEER IN WRITING.

12. ALL SHOP AND FIELD WELDS SHALL BE MADE BY WELDERS WHO HAVE BEEN QUALIFIED AND CERTIFIED TO MAKE THE REQUIRED WELDS IN ACCORDANCE WITH THE LATEST AMERICAN WELDING SOCIETY SPECIFICATIONS (A.W.S. D–1.1).

13. WELDS SHALL BE MADE WITH COVERED MILD STEEL ELECTRODES COMPLYING WITH AWS D1–72 CODE AND SERIES E 70XX.

14. ERECTION CONNECTORS SHALL BE PROVIDED IN ORDER TO PROPERLY ALIGN AND BE TRUE AND PLUMB WHEN WELDS ARE MADE.

15. ALL COMPLETE PENETRATION WELDS, BOTH SHOP AND FIELD, SHALL BE TESTED BY A QUALIFIED TESTING LABORATORY UTILIZING ULTRA SONIC TESTING PROCEDURES IN ACCORDANCE WITH A.W.S. D–1.1. ANY WELDS FOUND DEFECTIVE SHALL BE REMOVED AND REPLACED AT NO ADDITIONAL COST TO THE OWNER. ALL X–RAYED WELDS SHALL BE GROUND SMOOTH.

16. THE FABRICATOR SHALL SUPPLY BACK–UP PLATES AND EXTENSION TABS FOR ALL COMPLETE PENETRATION WELDS.

17. ALL STEEL MEMBERS, UNLESS NOTED OTHERWISE, SHALL BE PAINTED W/ ONE COAT OF SHOP PRIMER. DO NOT PRIME ITEMS TO BE EMBEDDED IN CONCRETE OR FIRE PROOFED W/ SPRAY ON MATERIAL WITHOUT COORDINATION W/ THE ARCHITECT. GALVANIZED DECK SHALL BE CONFORM TO ASTM A525, G60 (MINIMUM).

18. REINFORCE STEEL DECK OPENINGS (FLOOR & ROOF) FROM 6" TO 18" WITH 2x2x1/4 STEEL ANGLES. PLACE ANGLES PERPENDICULAR TO FLUTES, EXTEND MINIMUM OF TWO FLUTES BEYOND EACH SIDE OF OPENING AND WELD DECK AT EACH FLUTE. OPENING LARGER THAN 18" SHALL BE REINFORCED WITH 3x3x1/4 STEEL ANGLES WELDED TO TOP CHORD OF BAR JOISTS UNLESS SHOWN OTHERWISE ON PLANS. WELD DECK TO ANGLE AT 6" o/c AT PERIMETER OF OPENINGS.

19. STEEL LINTELS SUPPORTING BRICK VENEER AT EXTERIOR SHALL BE HOT–DIPPED GALVANIZED UNLESS NOTED OTHERWISE.

20. WELDED HEADED STUDS (WHS) SHALL BE "NELSON ANCHORS", OR EQUAL, Fs = 60 KSI, DIAMETER AND LENGTH AS SHOWN ON PLANS. STUDS TO BE WELDED& SHOP TESTED IN ACCORDANCE W/ THE MANUFACTURER'S RECOMMENDATIONS.

21. AFTER ERECTION, PRIME WELDS, ABRASIONS AND SURFACES NOT PRIMED. USE PRIMER CONSISTENT WITH SHOP COAT. GALVANIZED SURFACES (HOT DIPPED OR COLD) SHALL BE CLEANED AND PAINTED WITH "ZRC".

22. FIELD WELDS AND BOLTED CONNECTIONS SHALL BE VISUALLY INSPECTED BY A QUALIFIED INDEPENDENT INSPECTOR. THE INSPECTOR SHALL PROVIDE A WRITTEN REPORT TO THE STRUCTURAL ENGINEER.

23. A SINGLE ELECTRONIC FILE (PDF FORMAT) SHOP DRAWINGS SHALL BE PREPARED FOR ALL STRUCTURAL STEEL COMPONENTS AND SUBMITTED FOR REVIEW BY ENGINEER. ENGINEERING DRAWINGS SHALL NOT BE REPRODUCED AND USED AS SHOP DRAWINGS.

24. THE CONTRACTOR SHALL REVIEW AND ANNOTATE SHOP DRAWINGS BEFORE SUBMITTING THEM TO THE ARCHITECT/ENGINEER FOR REVIEW. THE CONTRACTOR SHALL ALLOW ARCHITECT/ENGINEER 10 WORKING DAYS FOR REVIEW OF SHOP DRAWINGS.

25. THE STRUCTURAL ENGINEER SHALL BE NOTIFIED FOR A FRAMING OBSERVATION IMMEDIATELY AFTER ROOF PANELS ARE INSTALLED AND BEFORE INSTALLATION OF THE CEILING.

26. INCLUDE IN BID AN ALLOWANCE FOR **0.5 TON** OF FABRICATED AND PRIMED STRUCTURAL STEEL TO BE USED AS DIRECTED IN THE FIELD FOR SPECIAL CONDITIONS AT A COST OF **$4,000.00 PER TON** (LABOR FOR ERECTING SAME TO BE INCLUDED). ANY UNUSED ALLOWANCE WILL BE CREDITED TO THE OWNER AT THE END OF THE PROJECT.

FASTENERS

1. CAST–IN–PLACE AND POST–INSTALLED ANCHORS SHALL BE PER ANCHOR DIAMETER AND EMBEDMENT DEPTH NOTED ON THE DRAWINGS. POST–INSTALLED ANCHORS SHALL BE UTILIZED ONLY WHERE SPECIFIED. ALL ANCHORS SHALL BE HOT–DIPPED GALVANIZED PER ASTM A153.

2. ALL ANCHORS NOTED BELOW SHALL BE INSTALLED IN ACCORDANCE WITH THE MANUFACTURER'S RECOMMENDATIONS. CONTRACTOR SHALL CONTACT MANUFACTURER'S REPRESENTATIVE FOR THE INITIAL TRAINING AND INSTALLATION OF ANCHORS, AND FOR PRODUCT RELATED QUESTIONS AND AVAILABILITY.

3. SPECIAL INSPECTIONS SHALL BE PROVIDED FOR ALL MECHANICAL AND ADHESIVE ANCHORS PER THE APPLICABLE EVALUATION REPORT NOTED BELOW. SPECIAL INSPECTIONS SHALL BE PERFORMED BY INDEPENDENT TESTING LABORATORY PERFORMING QA/QC SERVICES ON PROJECT.

4. EXPANSION BOLTS (EB) IN CONCRETE/CMU SHALL BE TESTED AND QUALIFIED FOR USE IN ACCORDANCE WITH ACI 355.2 AND ICC–ES AC193. ACCEPTABLE PRODUCTS:

   A. KWIK BOLT III (ICC–ES ESR–2302) BY HILTI (CONCRETE)

   B. KWIK BOLT III (ICC–ES–ESR–1385) BY HILTI (MASONRY)

   C. STRONG–BOLT 2 (ICC–ES ESR–3037) BY SIMPSON STRONG–TIE (CONCRETE)

   D. WEDGE–ALL ANCHOR (ICC–ES ESR–1396) BY SIMPSON STRONG–TIE (MASONRY)

5. HEAVY DUTY SLEEVE ANCHORS IN CONCRETE/CMU SHALL BE TESTED AND QUALIFIED OR USE IN ACCORDANCE WITH ACI 355.2 AND ICC–ES AC193. EXPANSION BOLTS (EB) SHALL NOT BE SUBSTITUTED FOR SLEEVE ANCHORS WITHOUT PRIOR WRITTEN APPROVAL BY STRUCTURAL ENGINEER. ACCEPTABLE PRODUCTS:

   A. HSL–3 (ICC–ES ESR–1545) BY HILTI (CONCRETE)

6. SCREW ANCHORS IN CONCRETE SHALL BE TESTED AND QUALIFIED FOR USE IN ACCORDANCE WITH ACI 355.2 AND ICC–ES AC193. ACCEPTABLE PRODUCTS:

   A. KWIK HUS–EZ (ICC–ES ESR–3027) BY HILTI (CONCRETE)

   B. KWIK HUS–EZ (ICC–ES ESR–3056) BY HILTI (MASONRY)

   C. TITEN HD (ICC–ES ESR–2713) BY SIMPSON STRONG–TIE (CONCRETE)

   D. TAPCON ANCHORS (ICC–ES ESR–1671) (MASONRY)

   E. POWERS WEDGE BOLT (ICC–ES ESR–1678) (MASONRY)

7. UNDERCUT ANCHORS IN CONCRETE SHALL BE TESTED AND QUALIFIED FOR USE IN ACCORDANCE WITH ACI 355.2 AND ICC–ES AC193. ACCEPTABLE PRODUCTS:

   A. HDA (ICC–ES ESR–1546) BY HILTI (CONCRETE)

   B. TORQ–CUT (ICC–ES ESR–2705) BY SIMPSON STRONG–TIE (CONCRETE)

8. POWDER ACTUATED FASTENERS IN CONCRETE/CMU SHALL BE TESTED AND QUALIFIED FOR USE IN ACCORDANCE WITH ACI 355.2 AND ICC–ES AC193. ACCEPTABLE PRODUCTS:

   A. X–U (ICC–ES ESR–2269) BY HILTI (CONCRETE/MASONRY/STEEL)

   B. POWDER ACTUATED FASTENERS (ICC–ES ESR–2138) BY SIMPSON STRONG TIE CONCRETE/MASONRY)

GREEN, RUBIANO & ASSOCIATES
CONSULTING STRUCTURAL ENGINEERS
1220 WEST HARRISON
HARLINGEN, TEXAS 78551
(956)428–4461 (956)428–0287 FAX
FIRM REGISTRATION # F–4145

COPYRIGHT 2019 BY GREEN, RUBIANO & ASSOCIATES

No.	REVISIONS	BY

GMS ARCHITECTS
1150 paredes line rd.
brownsville
texas 78526
(956) 546-0110
fax (956) 546-0196

SAN BENITO CISD
ADDITIONS AND RENOVATIONS AT SAN BENITO HS AND SULLIVAN ELEMENTARY
SAN BENITO TEXAS

BID PACKAGE "B"
SULLIVAN
ELEMENTARY

STATE OF TEXAS
HERIBERTO CAVAZOS
103450
LICENSED
PROFESSIONAL ENGINEER
8/5/19

COPYRIGHT 2019
GOMEZ MENDEZ SAENZ INC.
ARCHITECTS-PLANNERS

DATE	August 5, 2019
SCALE	As Shown
DRAWN	IG, JA, CW
JOB	192-538
SHEET	BS1.1

GENERAL STRUCTURAL NOTES

FASTENERS CONTINUED:

9. ADHESIVE ANCHORS IN CONCRETE/CMU SHALL BE TESTED AND QUALIFIED FOR USE IN ACCORDANCE WITH ACI 355.4 AND ICC-ES AC308. ACCEPTABLE PRODUCTS:

   A. HIT-RE 500-V3 (ICC-ES ESR-3814) BY HILTI (CONCRETE)

   B. HIT-HY 270 (ICC-ES ESR-4143) BY HILTI (MASONRY)

   C. SET-XP (ICC-ES ESR-2508) BY SIMPSON STRONG-TIE (CONCRETE)

   D. SET (ICC-ES ESR-1772) BY SIMPSON STRONG-TIE (MASONRY)

10. J-BOLTS SHALL BE FABRICATED FROM ASTM A36/A307 ROD. BOLTS, NUTS AND WASHERS SHALL BE GALVANIZED. EXPANSION BOLTS/SLEEVE ANCHORS SHALL NOT BE SUBSTITUTED FOR J-BOLTS WITHOUT PRIOR WRITTEN APPROVAL BY STRUCTURAL ENGINEER.

11. HEADED ANCHOR RODS SHALL BE FABRICATED FROM ASTM F1554 MATERIAL, FY=36 KSI.

12. SUBSTITUTION REQUESTS FOR PRODUCTS LISTED ABOVE SHALL BE SUBMITTED BY THE CONTRACTOR TO THE STRUCTURAL ENGINEER ALONG WITH CALCULATIONS THAT ARE PREPARED & SEALED BY A REGISTERED PROFESSIONAL ENGINEER. THE CALCULATIONS SHALL DEMONSTRATE THAT THE SUBSTITUTED PRODUCT IS CAPABLE OF ACHIEVING THE PERTINENT EQUIVALENT PERFORMANCE VALUES OF THE SPECIFIED PRODUCT USING THE APPROPRIATE DESIGN PROCEDURE AND/OR STANDARDS. SUBSTITUTED ANCHORS SHALL HAVE A VALID CURRENT EVALUATION (ICC-ES OR IAPMO-ES) REPORT.

13. REFERENCE STRUCTURAL STEEL NOTES FOR BOLTS CONNECTING STRUCTURAL STEEL COMPONENTS.

LIGHTWEIGHT STEEL FRAMING (STEEL STUDS)

1. THE **GENERAL CONTRACTOR, PROJECT SUPERINTENDENT AND THE LIGHTWEIGHT STEEL FRAMING FOREMAN** SHALL MEET WITH THE STRUCTURAL ENGINEER PRIOR TO THE START OF LIGHTWEIGHT STEEL FRAMING WORK TO REVIEW PROJECT REQUIREMENTS AND PROCEDURES.

2. ALL STUDS AND ACCESSORIES SHALL BE OF THE TYPE, SIZE, GAUGE AND SPACING SHOWN ON THE DRAWINGS.

3. ALL STUDS AND JOIST MEMBERS 16 GAUGE AND HEAVIER SHALL BE FORMED FROM STEEL CORRESPONDING TO A TYPE LISTED IN THE A.I.S.I. "SPECIFICATION FOR THE DESIGN OF COLD-FORMED STEEL STRUCTURAL MEMBERS", WITH A MINIMUM YIELD STRENGTH OF 33 KSI UNLESS SPECIFICALLY NOTED OTHERWISE.

4. ALL 18 GAUGE AND LIGHTER MEMBERS, TRACK, BRIDGING, AND ACCESSORY ITEMS SHALL BE FORMED FROM STEEL "SPECIFICATION FOR THE DESIGN OF COLD-FORMED STEEL STRUCTURAL MEMBERS", WITH A MINIMUM YIELD STRENGTH OF 33 KSI UNLESS SPECIFICALLY NOTED OTHERWISE.

5. ALL FRAMING PRODUCTS SHALL BE FORMED FROM STEEL POSSESSING A COATING CORRESPONDING TO THE MINIMUM REQUIREMENTS OF ASTM C955.

6. ALL FRAMING COMPONENTS SHALL BE CUT SQUARELY FOR ATTACHMENT TO PERPENDICULAR EMBERS, OR, AS REQUIRED, FOR AN ANGULAR FIT AGAINST ABUTTING MEMBERS.

7. ALL FIELD CUTTING OF STUDS MUST BE DONE BY SAWING OR SHEARING. TORCH CUTTING OF COLD FORMED MEMBERS IS UNACCEPTABLE.

8. WHEN REQUIRED FOR BRIDGING PURPOSES, THE FRAMING FABRICATOR IS TO ENSURE PUNCH OUT ALIGNMENT WHEN ASSEMBLING FRAMING AND FIELD CUTTING STUDS TO LENGTH. REFER TO TYPICAL STUD/TRACK CONNECTION AND INDEXING DETAILS.

9. NO SPLICES IN STUDS, JOISTS, OR OTHER LOAD CARRYING MEMBERS MAY BE MADE WITHOUT PRIOR ENGINEERING REVIEW AND SPECIFIC DETAILS FOR ANY SUCH SPLICE(S).

10. NO NOTCHING OR COPING OF STUDS, JOISTS OR RAFTERS IS ALLOWED, UNLESS STATED WITHIN THIS DRAWING PACKAGE.

11. WHERE SPLICING OF WALL TRACK IS NECESSARY BETWEEN STUDS, A PIECE OF STUD SHALL BE PLACED IN THE ADJOINING TRACK SECTIONS AND FASTENED TO THE TRACK FLANGES AT BOTH SIDES OF THE WALL OR THE TRACKS SHALL BE BUTTED TIGHT TOGETHER AND FASTENED TO STRUCTURE EITHER SIDE OF THE JOINT.

12. FOR ALL TRACKS USED IN COMPOSITE MEMBERS SUCH AS TRUSSES, POSTS, HEADERS AND JAMBS, THE TRACK MUST BE INSTALLED AS A SINGLE PIECE; NO SPLICING IS PERMITTED.

13. ALL SCREWS SHALL BE OF THE DIAMETER AND SIZE INDICATED ON THE DRAWINGS, AND SHALL BE THOSE MANUFACTURED AND TESTED BY ITW BUILDEX OR EQUIVALENT. A MINIMUM ½ INCH EDGE DISTANCE AND 1/2 INCH SCREW SPACING IS REQUIRED, UNLESS NOTED OTHERWISE ON THE DRAWINGS. SCREW PENETRATION THROUGH JOINED MATERIALS SHALL NOT BE LESS THAN THREE EXPOSED THREADS. SCREW DESIGN IS BASED ON A TYPE 'T3' SCREW. (UNLESS NOTED OTHERWISE)

14. ALL POWDER ACTUATED FASTENERS (P.A.F.) SUBJECTED TO TENSION SHALL HAVE A 15MM (MINIMUM) DIAMETER STEEL WASHERS. THE FOLLOWING MINIMUM EDGE DISTANCES AND FASTENER SPACING APPLY:

	EDGE DISTANCE		MINIMUM SPACING		PENETRATION	
PIN DIAMETER	STEEL	CONCRETE	STEEL	CONCRETE	STEEL	CONCRETE
0.157"ø	1/2"	3"	1"	4"	FULL	1.1/4"

EXTERIOR COMPONENTS & CLADDINGS

ALL EXTERIOR COMPONENT AND CLADDING SYSTEMS (E.G. WINDOWS, CURTAIN WALLS, STOREFRONTS, DOORS, ARCHITECTURAL SIDINGS, METAL WALL AND ROOF PANELS, ROOFING SYSTEMS, SKYLIGHTS) MUST MEET MINIMUM WIND CODE REQUIREMENTS. CONTRACTOR MUST SUBMIT COMPONENT AND CLADDING ASSEMBLY WIND PRESSURE AND IMPACT RESISTANCE TESTING RATINGS AND REQUIRED ATTACHMENT PROCEDURES TO STRUCTURAL ENGINEER FOR REVIEW. ROOF TOP MECHANICAL EQUIPMENT AND THEIR SUPPORT COMPONENTS, AND ANCHORING OF THESE ITEMS TO THE STRUCTURE, SHALL BE DELEGATED DESIGN TO BE PERFORMED BY THE EQUIPMENT'S MANUFACTURER, TO MEET THE WIND PRESSURES CALCULATED PER ASCE 7-10 SECTION 29.5.1 AND ASCE 7-05 SECTION 6.5.15.1, WHICHEVER PRODUCES GREATER WIND LOADS BY USING THE WIND DESIGN PARAMETERS LISTED ON THE GENERAL STRUCTURAL NOTES DESIGN CRITERIA.

1. TESTED ASSEMBLIES

   A. THE CONTRACTOR SHALL INSTALL PROJECT SPECIFIC ASSEMBLIES THAT HAVE BEEN TESTED AND MEET THE APPLICABLE PERFORMANCE REQUIREMENTS LISTED BELOW. PROJECT ASSEMBLIES SHALL BE INSTALLED IN SAME MANNER AS TESTED ASSEMBLIES INCLUDING SYSTEM COMPONENTS, REINFORCEMENT, GLAZING, HARDWARE, ANCHORS AND FASTENING LOCATIONS, SEALANTS & ALL ACCESSORIES, AS APPLICABLE.

2. ASSEMBLY PERFORMANCE REQUIREMENTS

   A. STRUCTURAL PERFORMANCE: TESTED ASSEMBLY THAT PASSES STRUCTURAL PERFORMANCE REQUIREMENTS WHEN TESTED IN ACCORDANCE WITH THE APPLICABLE PERFORMANCE STANDARD(S) LISTED BELOW, AT A MINIMUM OF THE POSITIVE AND NEGATIVE DESIGN WIND-LOAD PRESSURES INDICATED ON THE STRUCTURAL DRAWINGS. TESTED ASSEMBLY SHALL BE NO SMALLER IN WIDTH AND LENGTH THAN ASSEMBLY INDICATED FOR USE ON THE PROJECT AND SHALL MATCH PROJECT ASSEMBLY INCLUDING ALL COMPONENTS AND SUBSTRATE(S).

   B. WINDBORNE-DEBRIS-IMPACT RESISTANCE: TESTED ASSEMBLY THAT PASSES LARGE-MISSILE IMPACT PROTECTION TESTING REQUIREMENTS ACCORDING TO ASTM E 1996 WHEN TESTED ACCORDING TO ASTM E 1886. TESTED ASSEMBLY SHALL BE NO SMALLER IN WIDTH AND LENGTH THAN ASSEMBLY INDICATED FOR USE ON THE PROJECT AND SHALL MATCH PROJECT ASSEMBLY INCLUDING ALL COMPONENTS AND SUBSTRATE(S).

EXTERIOR COMPONENTS & CLADDINGS CONTINUED:

3. ASSEMBLY PERFORMANCE STANDARDS

   A. ASTM E 330 – STANDARD TEST METHOD FOR STRUCTURAL PERFORMANCE OF EXTERIOR WINDOWS, DOORS, SKYLIGHTS AND CURTAIN WALLS BY UNIFORM STATIC AIR PRESSURE DIFFERENCE

   B. ASTM E 1592 – STANDARD TEST METHOD FOR STRUCTURAL PERFORMANCE OF SHEET METAL ROOF AND SIDING SYSTEMS BY UNIFORM STATIC AIR PRESSURE DIFFERENCE

   C. ASTM E 1886 – STANDARD TEST METHOD FOR PERFORMANCE OF EXTERIOR WINDOWS, CURTAIN WALLS, DOORS, AND STORM SHUTTERS IMPACTED BY MISSILE(S) AND EXPOSED TO CYCLIC PRESSURE DIFFERENTIALS

   D. ASTM E 1996 – STANDARD SPECIFICATION FOR PERFORMANCE OF EXTERIOR WINDOWS, CURTAIN WALLS, DOORS AND IMPACT PROTECTIVE SYSTEMS IMPACTED BY WINDBORNE DEBRIS IN HURRICANES

   E. FM 4450 – APPROVAL STANDARD FOR CLASS 1 INSULATED STEEL DECK ROOFS

   F. FM 4470 – APPROVAL STANDARD FOR SINGLE-PLY, POLYMER-MODIFIED BITUMEN SHEET, BUILT-UP ROOF (BUR) AND LIQUID APPLIED ROOF ASSEMBLIES FOR USE IN CLASS 1 AND NONCOMBUSTIBLE ROOF DECK CONSTRUCTION

   G. FM 4474 – AMERICAN NATIONAL STANDARD FOR EVALUATING THE SIMULATED WIND UPLIFT RESISTANCE OF ROOF ASSEMBLIES USING STATIC POSITIVE AND/OR NEGATIVE DIFFERENTIAL PRESSURES

   H. UL 580 – STANDARD FOR TESTS FOR UPLIFT RESISTANCE OF ROOF ASSEMBLIES

   I. UL 1897 – STANDARD FOR UPLIFT TESTS FOR ROOF COVERING SYSTEMS

4. ASSEMBLY SUBMITTALS

   A. SUBMITTALS SHALL CONSIST OF PROJECT SPECIFIC SHOP DRAWINGS AND ASSEMBLY TEST REPORTS, AS DESCRIBED BELOW. SUBMITTALS SHALL BE COMPLETE, CLEAR AND LEGIBLE; INCOMPLETE SUBMITTALS WILL BE REJECTED.

   B. SHOP DRAWINGS SHALL INCLUDE THE FOLLOWING ITEMS:

      1) SYSTEM DESCRIPTION INCLUDING MANUFACTURER'S NAME AND SPECIFIC PRODUCT MODEL NUMBER, NAME OR DESIGNATION.

      2) MANUFACTURER'S PRODUCT DATA/TECHNICAL INFORMATION AND DETAILS.

      3) SYSTEM LAYOUT PLANS, ELEVATIONS, CROSS-SECTIONS AND DETAILS AS APPLICABLE TO THE PROJECT.

      4) DESCRIPTION OF SYSTEM'S ASSEMBLY COMPONENTS (E.G. ROOF LAYERS, FRAME MEMBERS, REINFORCEMENT, DOOR TYPE, GLAZING, HARDWARE, ANCHORS AND FASTENING LOCATIONS, SEALANTS, ACCESSORIES). ALL COMPONENTS SHALL MATCH THOSE SPECIFIED ON ASSEMBLY TEST REPORTS.

      5) SHOP DRAWINGS SHALL INDICATE THE SYSTEM ATTACHMENT METHOD INCLUDING ANCHOR TYPE AND FASTENER LOCATIONS FOR EACH DIFFERENT TYPE OF SUBSTRATE. SYSTEM ATTACHMENT SHALL BE PER ASSEMBLY TEST REPORTS.

      6) ASSEMBLY TEST REPORTS OFTEN PROVIDE OPTIONS FOR MATERIALS AND FASTENING METHODS. SHOP DRAWINGS SHALL BE SPECIFIC TO THE MATERIAL OR METHOD THAT THE CONTRACTOR IS PROPOSING TO INSTALL ON THE PROJECT.

      7) CROSS-REFERENCING BETWEEN THE SHOP DRAWINGS AND THE ASSEMBLY TEST REPORTS IS ENCOURAGED, BUT THE SHOP DRAWINGS SHALL BE DETAILED ENOUGH TO STAND INDEPENDENT OF THE TEST REPORTS.

   C. ASSEMBLY TEST REPORTS SHALL INCLUDE THE FOLLOWING ITEMS:

      1) PERFORMANCE RATINGS BASED ON EVALUATION OF COMPREHENSIVE TESTING IN ACCORDANCE WITH THE APPLICABLE PERFORMANCE STANDARD(S) LISTED ABOVE.

      2) TESTING AND DEVELOPMENT OF REPORTS SHALL BE PERFORMED BY A QUALIFIED THIRD-PARTY TESTING AGENCY.

      3) TEST REPORTS SHALL BE SEALED BY THE QUALIFIED PROFESSIONAL ENGINEER RESPONSIBLE FOR THEIR PREPARATION.

      4) TEST REPORTS SHALL BE RECENT TO INCLUDE THE MOST CURRENT SYSTEM MANUFACTURER'S COMPONENTS AND AVAILABLE FASTENERS AND ACCESSORIES. EXPIRED TEST REPORTS SHALL BE REJECTED.

      5) TEST REPORTS SHALL BE SUBMITTED FOR EACH DIFFERENT TYPE OF ASSEMBLY ON THE PROJECT INCLUDING VARIATIONS OF SYSTEM COMPONENTS AND SUBSTRATES.

SPECIAL INSPECTIONS

SPECIAL INSPECTIONS INDEPENDENT OF THE CONTRACTOR, THE ARCHITECT, OR THE ENGINEER, SHALL BE PROVIDED BY A SPECIAL INSPECTOR EMPLOYED BY THE OWNER ACCORDING TO CHAPTER 17 OF THE IBC 2012. THE SPECIAL INSPECTOR SHALL OBSERVE THE WORK FOR CONFORMANCE WITH THE CONTRACT DOCUMENTS. THE SPECIAL INSPECTOR SHALL SEND WRITTEN REPORTS TO THE OWNER, THE ARCHITECT, THE ENGINEER AND THE CONTRACTOR. THE REPORTS SHALL INDICATE IF WORK INSPECTED WAS DONE IN CONFORMANCE WITH THE CONTRACT DOCUMENTS. ALL DISCREPANCIES SHALL BE BROUGHT TO THE IMMEDIATE ATTENTION OF THE CONTRACTOR FOR CORRECTION. IF THE DISCREPANCIES ARE NOT CORRECTED, THE SPECIAL INSPECTOR SHALL BRING THE DISCREPANCIES TO THE ATTENTION OF THE REGISTERED DESIGN PROFESSIONAL IN RESPONSIBLE CHARGE PRIOR TO THE COMPLETION OF THAT PHASE OF THE WORK. THE SPECIAL INSPECTOR SHALL SUBMIT A FINAL SIGNED REPORT STATING THAT THE SPECIAL INSPECTION WORK WAS, TO THE BEST OF THEIR KNOWLEDGE, IN OR NOT IN CONFORMANCE WITH THE DRAWINGS, SPECIFICATIONS AND APPLICABLE WORKMANSHIP PROVISIONS OF THE IBC 2012.

CONTINUOUS OR PERIODIC SPECIAL INSPECTION IS REQUIRED FOR THE FOLLOWING WORK:

REQUIRED VERIFICATION AND INSPECTION OF SOILS

VERIFICATION AND INSPECTION TASK	CONTINUOUS DURING TASK LISTED	PERIODICALLY DURING TASK LISTED
VERIFY SOILS BELOW SHALLOW FOUNDATIONS ARE SUITABLE TO ACHEIVE THE BEARING CAPACITY FOR WHICH THEY WERE DESIGNED		X
VERIFY EXCAVATIONS ARE EXTENDED TO PROPER DEPTH AND HAVE REACHED PROPER MATERIAL		X
PERFORM CLASSIFICATION AND TESTING OF COMPACTED SELECT FILL MATERIALS		X
VERIFY USE OF PROPER MATERIALS, DENSITIES AND LIFT THICKNESSES DURING PLACEMENT AND COMPACTION OF SELECT FILL	X	
PRIOR TO PLACEMENT OF COMPACTED SELECT FILL, OBSERVE SUBGRADE AND VERIFY THAT SITE HAS BEEN PREPARED PROPERLY		X

SPECIAL INSPECTIONS CONTINUED:

REQUIRED VERIFICATION AND INSPECTION OF CONCRETE CONSTRUCTION

VERIFICATION AND INSPECTION	CONTINUOUS	PERIODIC
INSPECTION OF REINFORCING STEEL, INCLUDING PRESTRESSING TENDONS, AND PLACEMENT		X
INSPECT BOLTS TO BE INSTALLED IN CONCRETE PRIOR TO AND DURING PLACEMENT OF CONCRETE	X	
VERIFY USE OF REQUIRED DESIGN MIX		X
PERFORM SLUMP AND AIR CONTENT TEST, AND DETERMINE THE TEMPERATURE OF THE CONCRETE AT THE TIME OF SAMPLING FRESH CONCRETE FOR MAKING SPECIMENS FOR STRENGTH TESTS PER ACI 318	X	
INSPECTION OF CONCRETE AND SHOTCRETE PLACEMENT FOR PROPER APPLICATION TECHNIQUES	X	
INSPECTION FOR MAINTENANCE OF SPECIFIED CURING TEMPERATURE AND TECHNIQUES		X
INSPECTION OF PRESTRESSED CONCRETE APPLICATION OF PRESTRESSING FORCES	X	
VERIFICATION OF IN-SITU CONCRETE STRENGTH, PRIOR TO STRESSING OF TENDONS IN POST-TENSIONED CONCRETE AND PRIOR TO REMOVAL OF SHORES AND FORMS FROM BEAMS AND STRUCTURAL SLABS		X
ERECTION OF PRECAST CONCRETE MEMBERS		X
INSPECT FORMWORK FOR SHAPE, LOCATION AND DIMENSIONS OF THE CONCRETE MEMBER BEING FORMED		X

REQUIRED VERIFICATION AND INSPECTION OF ANCHORS

VERIFICATION AND INSPECTION	CONTINUOUS	PERIODIC
CAST-IN-PLACE, POST-INSTALLED, MECHANICAL AND EPOXY SET ANCHORS: AS APPLICABLE, THE INSPECTION PROGRAM SHALL VERIFY THE ANCHOR TYPE, EMBEDMENT, TIGHTENING TORQUE, DIMENSIONS, HOLE DEPTH & DIAMETER AND CLEANOUT, EPOXY MIXING AND PLACEMENT PROCEDURES IN ACCORDANCE WITH THE CONTRACT DOCUMENTS AND THE CURRENT ICC-ES EVALUATION REPORT	FREQUENCY OF INSPECTION SHALL BE IN ACCORDANCE WITH THE CURRENT ICC-ES EVALUATION REPORT, OR PER THE SPECIAL INSPECTION REQUIREMENTS OF THE ANCHOR SUBSTRATE, WHICHEVER IS MORE STRINGENT	

REQUIRED LEVEL 1 SPECIAL INSPECTION OF MASONRY CONSTRUCTION (OCCUPANCY CATEGORY I, II, III)

INSPECTION TASK	CONTINUOUS DURING TASK LISTED	PERIODICALLY DURING TASK LISTED
AS MASONRY CONSTRUCTION BEGINS, THE FOLLOWING SHALL BE VERIFIED TO ENSURE COMPLIANCE:		
PROPORTIONS OF SITE-PREPARED MORTAR		X
PLACEMENT OF MASONRY UNITS AND CONSTRUCTION OF MORTAR JOINTS		X
LOCATION OF REINFORCEMENT, CONNECTORS AND ANCHORAGES		X
THE INSPECTION PROGRAM SHALL VERIFY:		
SIZE AND LOCATION OF STRUCTURAL ELEMENTS		X
TYPE, SIZE AND LOCATION OF ANCHORS, INCLUDING OTHER DETAILS OF ANCHORAGE OF MASONRY TO STRUCTURAL MEMBERS, FRAMES OR OTHER CONSTRUCTION		X
SPECIFIED SIZE, GRADE AND TYPE OF REINFORCEMENT		X
PROTECTION OF MASONRY DURING COLD WEATHER (TEMPERATURE BELOW 40°F) OR HOT WEATHER (TEMPERATURE ABOVE 90°F)		X
PRIOR TO GROUTING, THE FOLLOWING SHALL BE VERIFIED TO ENSURE COMPLIANCE:		
GROUT SPACE IS CLEAN		X
PLACEMENT OF REINFORCEMENT, CONNECTORS AND ANCHORAGES		X
CONSTRUCTION OF MORTAR JOINTS		X
GROUT PLACEMENT SHALL BE VERIFIED TO ENSURE COMPLIANCE WITH CODE AND CONSTRUCTION DOCUMENT PROVISIONS	X	
PREPARATION OF ANY REQUIRED GROUT SPECIMENS, MORTAR SPECIMENS AND/OR PRISMS SHALL BE OBSERVED	X	
COMPLIANCE WITH REQUIRED INSPECTION PROVISIONS OF THE CONSTRUCTION DOCUMENTS AND THE APPROVED SUBITTALS SHALL BE VERIFIED		X

REQUIRED VERIFICATION AND INSPECTIONS OF OPEN-WEB STEEL JOISTS AND JOIST GIRDERS

VERIFICATION AND INSPECTION TASK	CONTINUOUS DURING TASK LISTED	PERIODICALLY DURING TASK LISTED
INSPECT THE INSTALLATION OF OPEN-WEB STEEL JOISTS AND JOIST GIRDERS		X
INSPECT WELDED OR BOLTED END CONNECTIONS		X
INSPECT HORIZONTAL OR DIAGONAL STANDARD BRIDGING AND BRIDGING THAT DIFFERS FROM SJI SPECIFICATIONS		X

REQUIRED VERIFICATION AND INSPECTION OF STEEL CONSTRUCTION

VERIFICATION AND INSPECTION	CONTINUOUS	PERIODIC
MATERIAL VERIFICATION OF HIGH-STRENGTH BOLTS, NUTS AND WASHERS		X
INSPECTION OF HIGH STRENGTH BOLTING		X
INSPECTION OF WELDING:		
COMPLETE AND PARTIAL PENETRATION GROOVE WELDS	X	
MULTIPASS FILLET WELDS	X	
SINGLE-PASS FILLET WELDS		X
FLOOR AND ROOF DECK WELDS		X
INSPECTION OF STEEL FRAME JOINT DETAILS FOR COMPLIANCE WITH APPROVED CONSTRUCTION DOCUMENTS		X

REQUIRED VERIFICATION AND INSPECTION OF COLD-FORMED LIGHTWEIGHT STEEL FRAME CONSTRUCTION (EXTERIOR METAL STUDS)

VERIFICATION AND INSPECTION TASK	CONTINUOUS DURING TASK LISTED	PERIODICALLY DURING TASK LISTED
MATERIAL VERIFICATION OF COLD-FORMED LIGHTWEIGHT FRAMING MEMBERS AND ACCESSORIES		X
TYPE, SIZE AND GAGE OF FRAMING MEMBERS AND ACCESSORIES (AS PER SHOP DRAWINGS)		X
SPACING OF FRAMING MEMBERS, BRACING, BLOCKING, AND BRIDGING (AS PER SHOP DRAWINGS)		X
INSPECTION OF WELDING; TYPE, LENGTH, SPACING (AS PER SHOP DRAWINGS)		X
INSPECTION OF FASTENER ATTACHMENT: BOLTING, ANCHORING, AND OTHER FASTENING OF COMPONENTS.		X

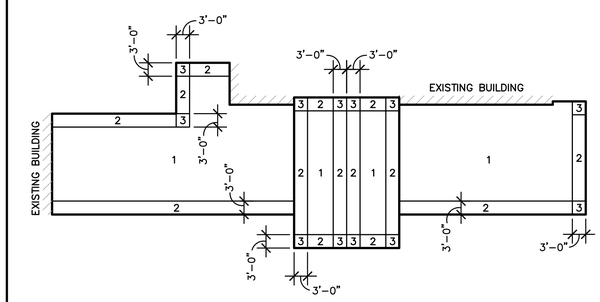

SAN BENITO CISD
SULLIVAN ELEMENTARY NEW ENTRY ADDITION
ROOF DESIGN WIND PRESSURE DIAGRAM (SERVICE)

DESIGN WIND PRESSURE FOR ROOF COMPONENTS & CLADDING	
ZONE	P- (UPLIFT)
1	-25 PSF
2	-42 PSF
3	-63 PSF

EXTERIOR FINISHES, DOORS & WINDOWS MAXIMUM DESIGN WIND PRESSURES
P+ = +26 PSF TOWARDS THE SURFACE
P- = -35 PSF AWAY FROM THE SURFACE

No.	REVISIONS	BY

GMS ARCHITECTS
1150 paredes line rd.
brownsville
texas 78526
(956) 546-0110
fax (956) 546-0196

SAN BENITO CISD
ADDITIONS AND RENOVATIONS AT SAN BENITO HS AND SULLIVAN ELEMENTARY
SAN BENITO TEXAS

BID PACKAGE "B"
SULLIVAN ELEMENTARY

STATE OF TEXAS
HERIBERTO CAVAZOS
103450
LICENSED
8/5/19

COPYRIGHT 2019
GOMEZ MENDEZ SAENZ INC.
ARCHITECTS-PLANNERS

DATE	August 5, 2019
SCALE	As Shown
DRAWN	IG, JA, CW
JOB	192-538
SHEET	BS1.2

GREEN, RUBIANO & ASSOCIATES
CONSULTING STRUCTURAL ENGINEERS
1220 WEST HARRISON
HARLINGEN, TEXAS 78551
(956)428-4481 (956)428-0287 FAX
FIRM REGISTRATION # F-4146

COPYRIGHT 2019 BY GREEN, RUBIANO & ASSOCIATES

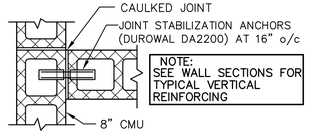

1 TYPICAL UNBONDED WALL INTERSECTION

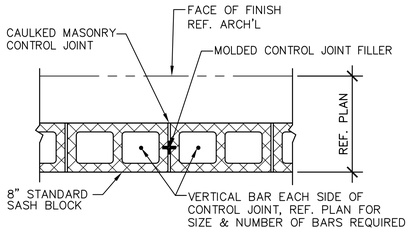

2 TYPICAL CRACK CONTROL JOINT

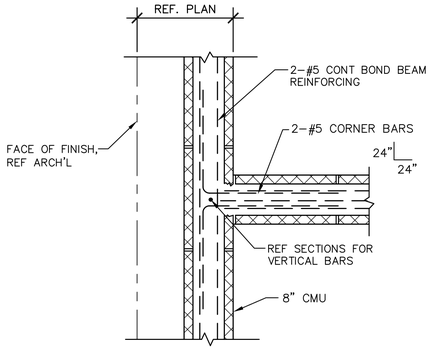

3 TYPICAL BOND BEAM AT INTERSECTING WALL

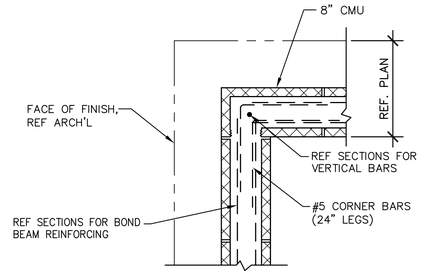

4 BOND BEAM AT EXTERIOR CORNERS

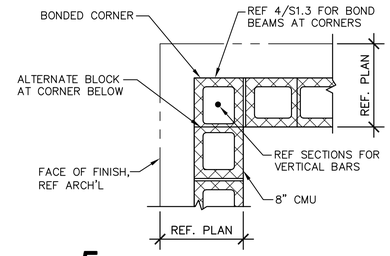

5 BONDED CORNER

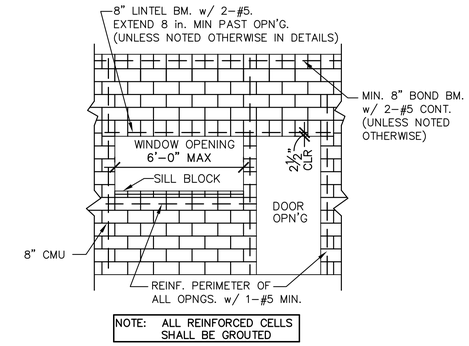

6 TYPICAL REINFORCING AT OPENINGS (U.N.O.)

(NON-LOAD-BEARING WALLS ONLY)

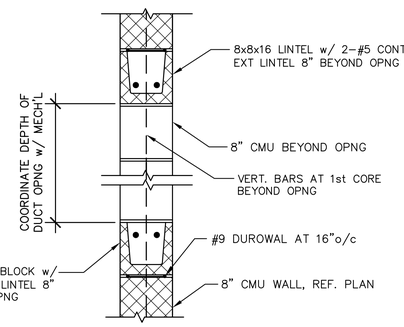

7 DUCT OPENING 4'-0" OR SMALLER THRU NON-LOAD-BEARING 8" CMU WALL

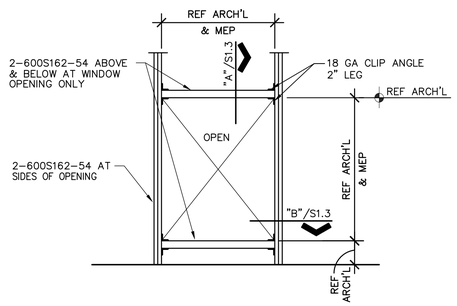

8 TYPICAL WINDOW/DOOR/LOUVER OPENING

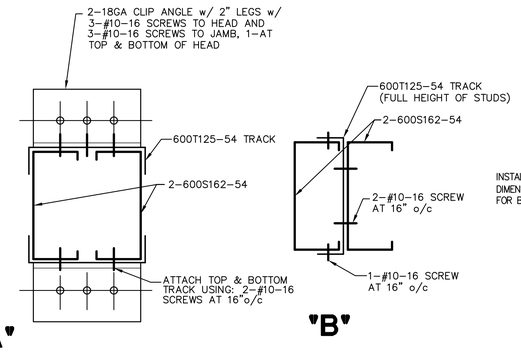

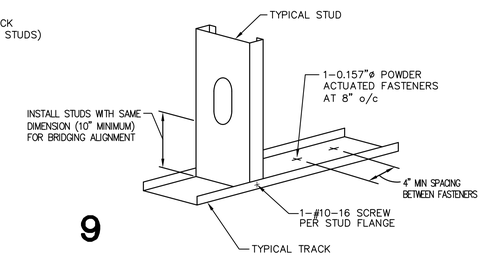

9

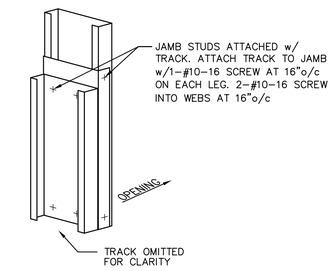

10

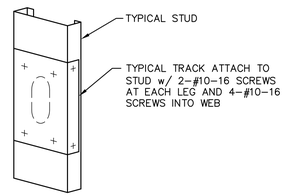

12 TYPICAL PUNCH-OUT REINFORCMENT DETAIL

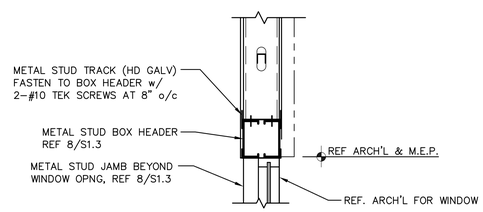

13 TYPICAL WINDOW/DOOR/LOUVER OPENING HEADER DETAIL

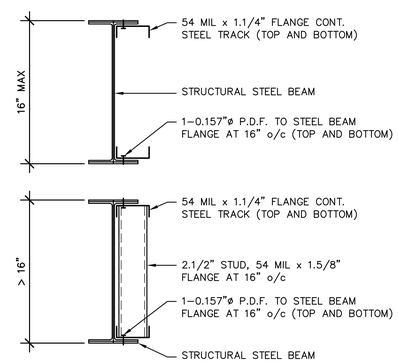

14 TYPICAL STEEL BEAM INFILL STUD DETAIL

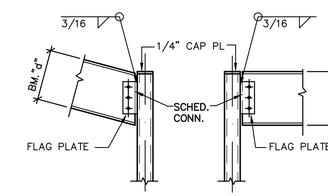

15

BEAM TO TUBE COLUMN CONNECTION SCHEDULE		
BEAM SIZE	PL SIZE	BOLTS
W8 & W10	PL 3/8x3.1/2x0'-6"	2-3/4"DIA.
W12 & W14	PL 3/8x3.1/2x0'-9"	3-3/4"DIA.
W16	PL 3/8x3.1/2x1'-0"	4-3/4"DIA.
W18	PL 3/8x3.1/2x1'-3"	5-3/4"DIA.
W21	PL 3/8x3.1/2x1'-6"	6-3/4"DIA.
W24	PL 3/8x3.1/2x1'-9"	7-3/4"DIA.
W27	PL 3/8x3.1/2x1'-10"	8-3/4"DIA.
W30	PL 3/8x3.1/2x2'-2"	9-3/4"DIA.

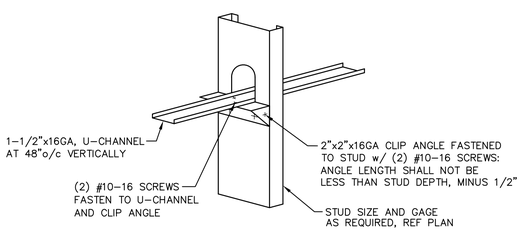

11 METAL STUD BRIDGING

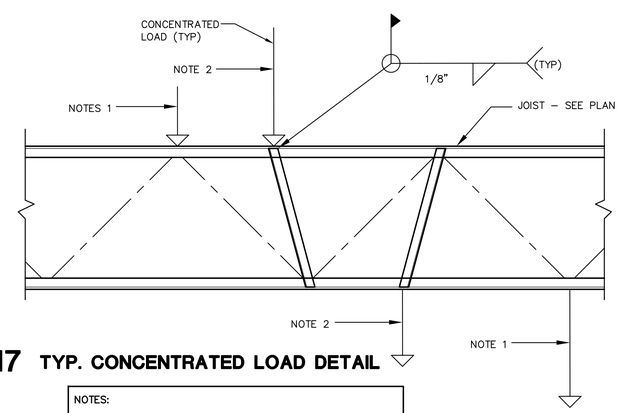

17 TYP. CONCENTRATED LOAD DETAIL

NOTES:

1. CONCENTRATED LOAD LOCATED AT JOIST PANEL POINT LOCATION - NO ADDTIONAL ANGLES REQUIRED.
2. CONCENTRATED LOAD (100 LBS. OR HEAVIER) NOT LOCATED AT JOIST PANEL POINT LOCATION - PROVIDE L2x2x3/16 TO PANEL POINT AS SHOWN.

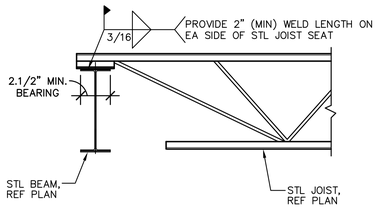

16 TYPICAL WELD LENGTH ON STL JOIST TO STL BEAM/STL PLATE CONNECTION

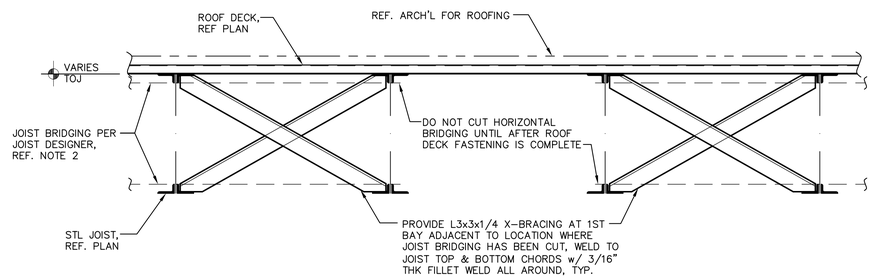

18 JOIST BRIDGING REPAIR DETAIL

NOTES:

1. AT LOCATIONS WHERE JOIST BRIDGING IS TO BE CUT FOR MECHANICAL DUCT RUNS, CONTRACTOR SHALL PROVIDE X-BRACING REPAIR AS DETAILED.
2. JOIST BRIDGING SHALL RUN CONTINUOUS FOR THREE (3) CONSECUTIVE JOIST BAYS BEFORE IT CAN BE CUT AGAIN.

GREEN, RUBIANO & ASSOCIATES
CONSULTING STRUCTURAL ENGINEERS
1220 WEST HARRISON
HARLINGEN, TEXAS 78551
(956)425-4461 (956)428-0287 FAX
FIRM REGISTRATION # F-4145

COPYRIGHT 2019 BY GREEN, RUBIANO & ASSOCIATES

No.	REVISIONS	BY

GMS ARCHITECTS
1150 paredes line rd.
brownsville
texas 78526
(956) 546-0110
fax (956) 546-0196

SAN BENITO CISD
ADDITIONS AND RENOVATIONS AT SAN BENITO HS AND SULLIVAN ELEMENTARY
SAN BENITO TEXAS

BID PACKAGE "B"
SULLIVAN ELEMENTARY

STATE OF TEXAS
HERIBERTO CAVAZOS
103450
LICENSED
PROFESSIONAL ENGINEER
8/5/19

COPYRIGHT 2019
GOMEZ MENDEZ SAENZ INC.
ARCHITECTS-PLANNERS

DATE	August 5, 2019
SCALE	As Shown
DRAWN	IG, JA, CW
JOB	192-538
SHEET	BS1.3

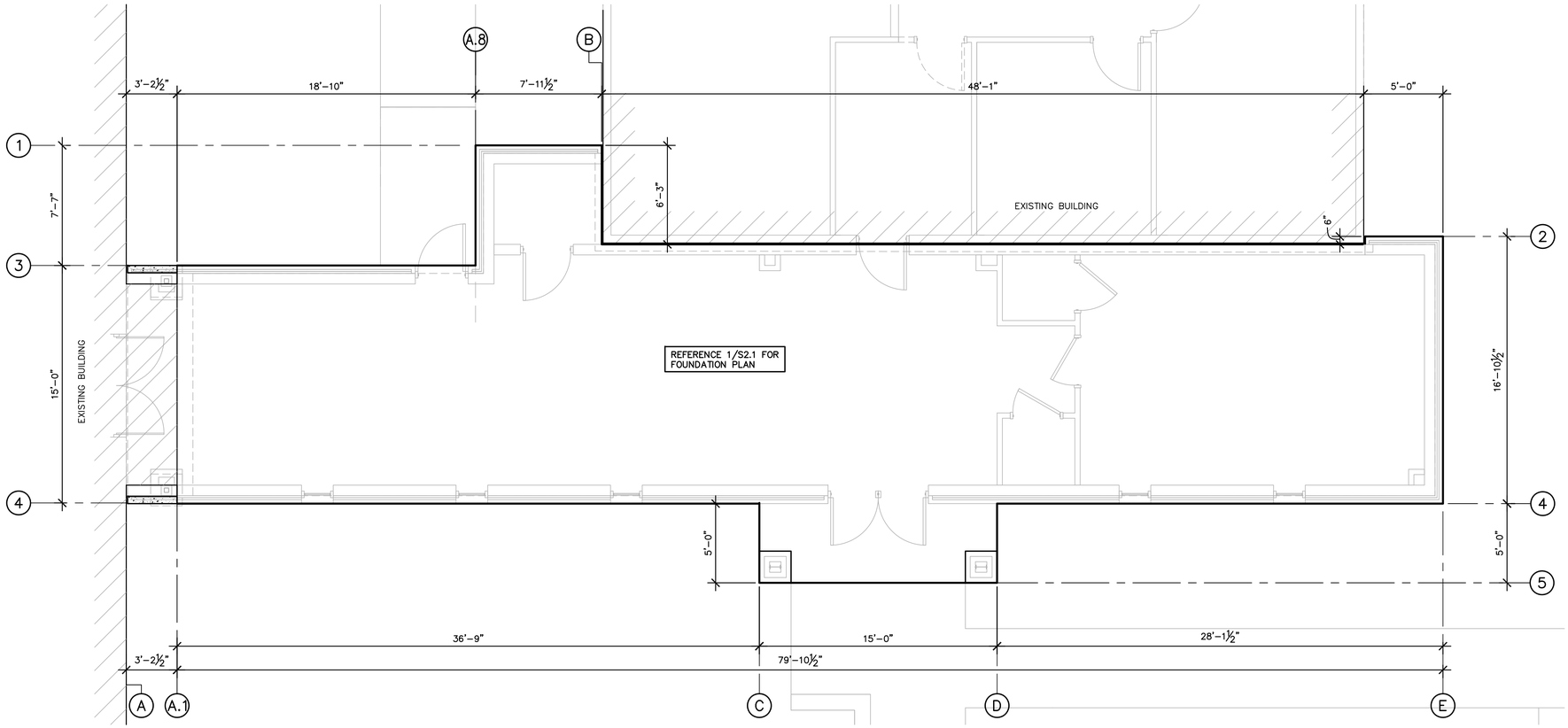

1 FOUNDATION DIMENSION LIMITS PLAN

1/4" = 1'-0"

SULLIVAN ELEMENTARY

N

PLAN NORTH

NOTES:

1. REFERENCE ARCHITECTURAL & CIVIL FOR BUILDING LOCATION ORIENTATION.
2. REFERENCE 1/S2.1 FOR FOUNDATION PLAN.

CONTRACTOR SHALL FIELD VERIFY ALL DIMENSIONS & EXISTING CONDITIONS IN THE FIELD. CONTACT ENGINEER IF CONDITIONS VARY FROM THOSE SHOWN ON THE DRAWINGS.

No.	REVISIONS	BY

GMS ARCHITECTS

1150 paredes line rd.
brownsville
texas 78526
(956) 546-0110
fax (956) 546-0196

SAN BENITO CISD
ADDITIONS AND RENOVATIONS AT SAN BENITO HS AND SULLIVAN ELEMENTARY

SAN BENITO TEXAS

BID PACKAGE "B"
SULLIVAN ELEMENTARY

STATE OF TEXAS
HERIBERTO CAVAZOS
103450
LICENSED
PROFESSIONAL ENGINEER
8/5/19

COPYRIGHT 2019
GOMEZ MENDEZ SAENZ INC.
ARCHITECTS-PLANNERS

DATE	August 5, 2019
SCALE	As Shown
DRAWN	IG, JA, CW
JOB	192-538
SHEET	BS2.0

GREEN, RUBIANO & ASSOCIATES
CONSULTING STRUCTURAL ENGINEERS
1230 WEST HARRISON
HARLINGEN, TEXAS 78551
(956)428-4461 (956)428-0267 FAX
FIRM REGISTRATION # F-4149

COPYRIGHT 2019 BY GREEN, RUBIANO & ASSOCIATES

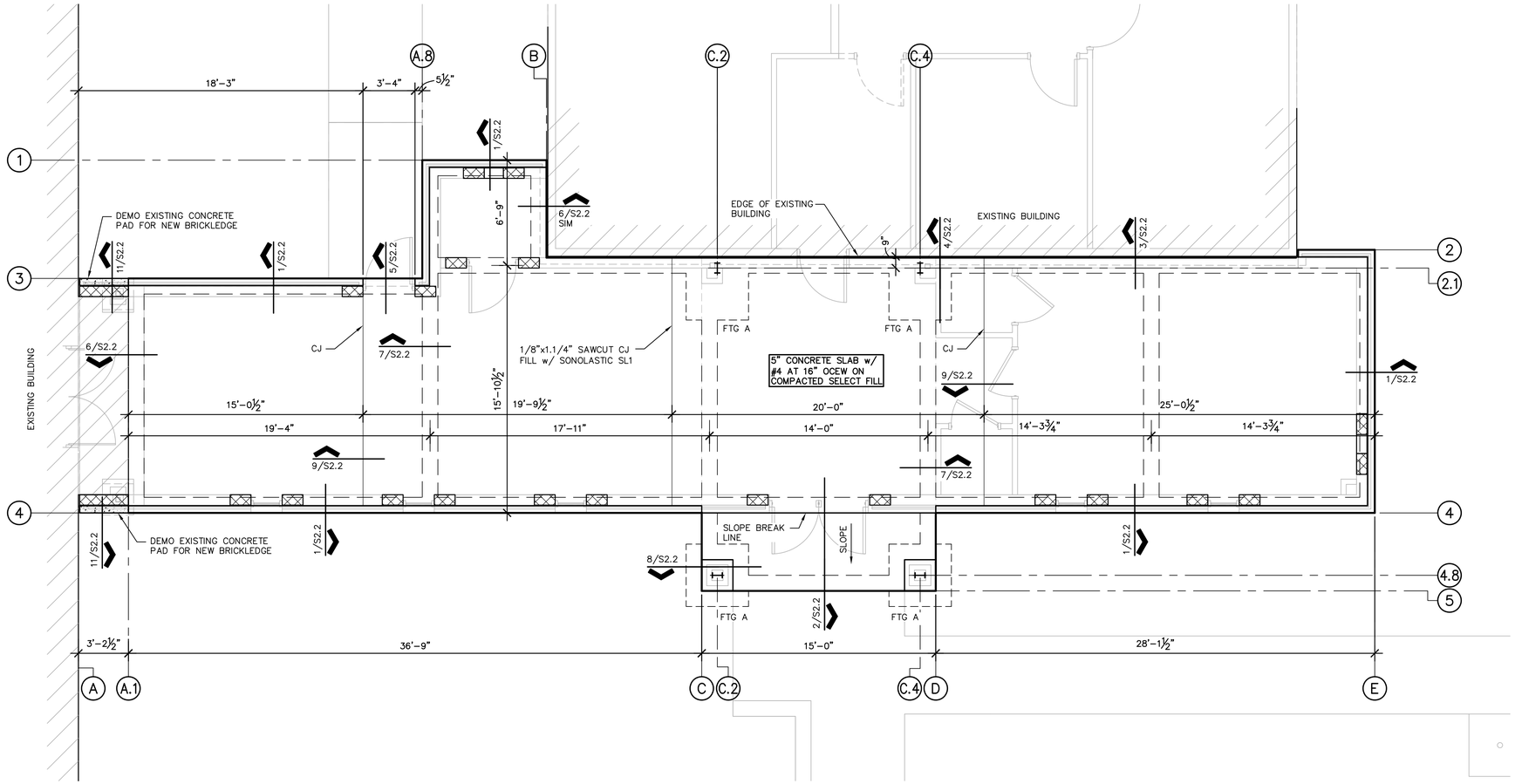

1 FOUNDATION PLAN

1/4" = 1'-0" SULLIVAN ELEMENTARY

N

PLAN NORTH

NOTES:

1. COORDINATE LOCATION & ORIENTATION WITH ARCHITECTURAL & CIVIL.
2. ALL CONDUIT GREATER THAN 1.1/2" IN DIAMETER SHALL BE RECESSED TO PROVIDE 1.1/2" CLEAR DISTANCE BETWEEN SLAB REBAR & CONDUIT.
3. MAINTAIN 2" MINIMUM CLEAR DISTANCE BETWEEN ALL CONDUIT IN SLAB.
4. A SINGLE CONDUIT (MAX 3" O.D.) MAY BE PLACED WITHIN THE BEAM CAGE. ALL CONDUIT IN BEAM CAGES TO BE TIED TO STIRRUPS MINIMUM OF 4" FROM HORIZONTAL BARS.
5. CRACK CONTROL JOINTS ARE NOTED ON THE PLANS. CONTRACTOR TO COORDINATE CHANGES WITH THE ENGINEER PRIOR TO FORMING FOUNDATION.
6. PLUMBING LINES SHALL NOT BE PLACED IN BOTTOM OF GRADE BEAM TRENCHES.
7. PLUMBING LINES PASSING PERPENDICULAR THROUGH GRADE BEAMS SHALL BE SLEEVED. BEAMS SHALL BE DEEPENED AND BENT REBAR PROVIDED IF LOCATION OF DRAIN LINES REQUIRES CUTTING BOTTOM BARS. REFERENCE 10/S2.2.
8. ALL JOINTS TO BE CLEANED AND FILLED w/ SONOLASTIC SL1 (SONNEBORN).
9. INDICATES 8" CMU w/ #5 VERTICAL BARS AT 8" o/c.

FOOTING SCHEDULE

MARK	SIZE	REINFORCEMENT
FTG A	4'-0" x 4'-0"	#5 AT 12" O.C.E.W.

BASEPLATE SCHEDULE

COLUMN	PLATE TxWxL	ANCHORS
W8 x 24	1" x 10" x 9"	4-3/4" DIA x 8" WHS

No.	REVISIONS	BY

GMS ARCHITECTS
1150 paredes line rd.
brownsville
texas 78526
(956) 546-0110
fax (956) 546-0196

SAN BENITO CISD
ADDITIONS AND RENOVATIONS AT SAN BENITO HS AND SULLIVAN ELEMENTARY

SAN BENITO TEXAS

BID PACKAGE "B"
SULLIVAN ELEMENTARY

STATE OF TEXAS
HERMBERTO CAVAZOS
103450
LICENSED
PROFESSIONAL ENGINEER
8/5/19

COPYRIGHT 2019
GOMEZ MENDEZ SAENZ INC.
ARCHITECTS-PLANNERS

DATE	August 5, 2019
SCALE	As Shown
DRAWN	IG, JA, CW
JOB	192-538
SHEET	BS2.1

GREEN, RUBIANO & ASSOCIATES
CONSULTING STRUCTURAL ENGINEERS
1230 WEST HARRISON
HARLINGEN, TEXAS 78550
(956)428-4461 (956)428-0267 FAX
FIRM REGISTRATION # F-4149

COPYRIGHT 2019 BY GREEN, RUBIANO & ASSOCIATES

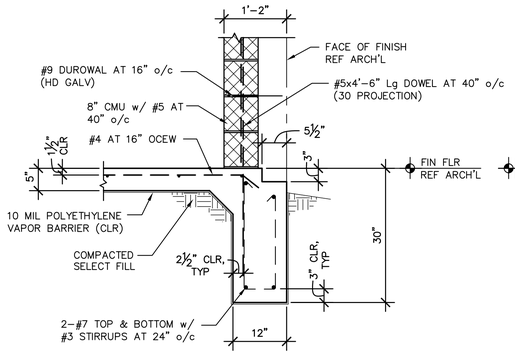

1

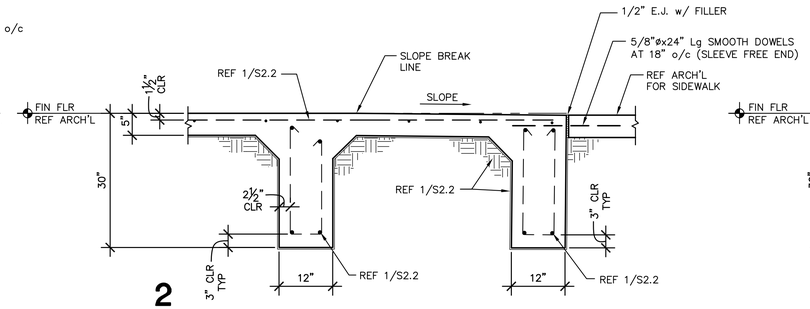

2

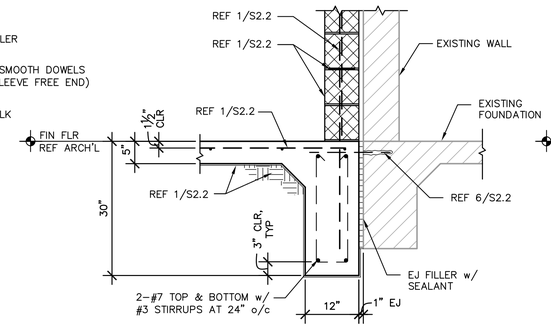

3

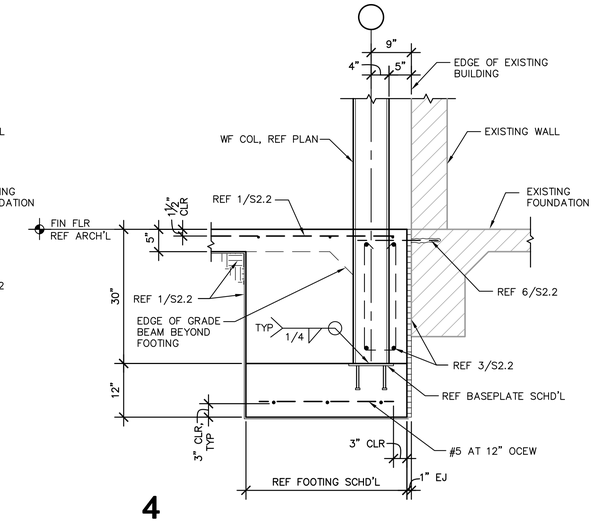

4

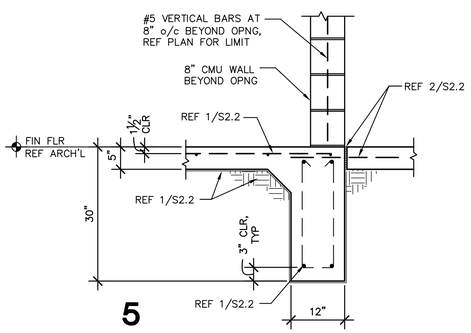

5

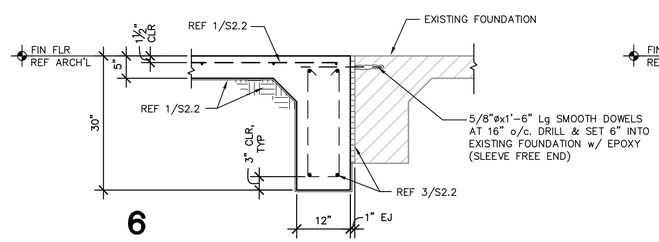

6

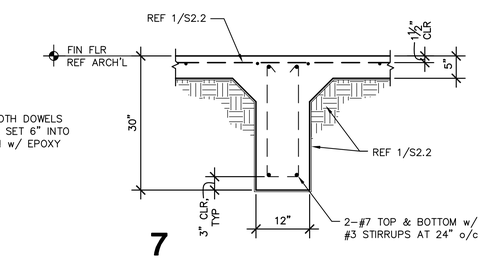

7

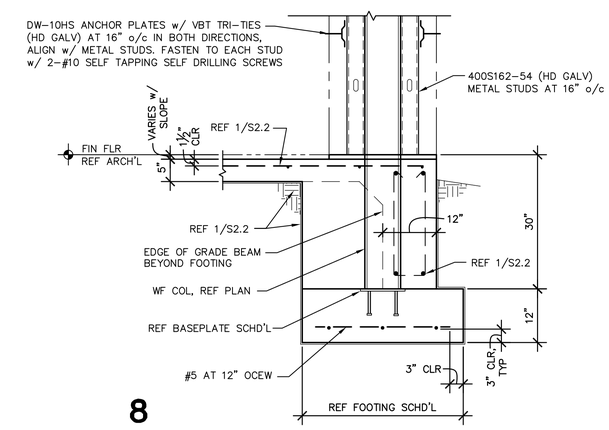

8

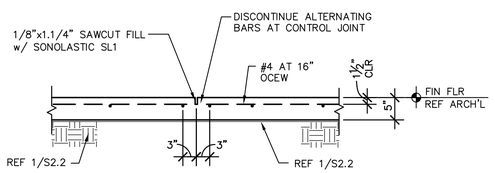

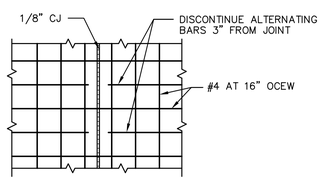

9 **CONTROL JOINT**

NOTE: ALL JOINTS ARE TO BE CLEANED AND FILLED WITH SONOLASTIC SL1 (SONNEBORN).

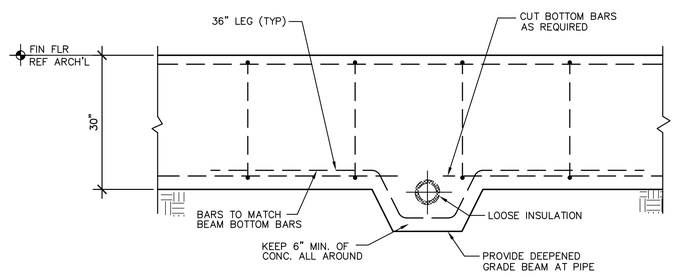

10 **TOP OF SLEEVE INTERRUPTS REINFORCING**

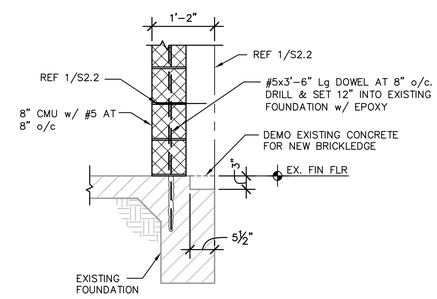

11

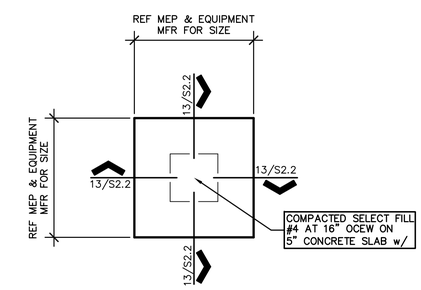

12 **EQUIPMENT YARD FOUNDATION PLAN**

1/2" = 1'-0"

NOTES:

1. COORDINATE LOCATION AND ORIENTATION WITH MEP AND ARCHITECTURAL.

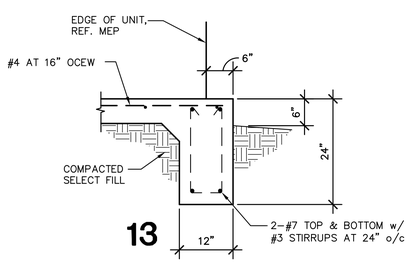

13

No.	REVISIONS	BY

GMS ARCHITECTS
1150 paredes line rd.
brownsville
texas 78526
(956) 546-0110
fax (956) 546-0196

TEXAS

SAN BENITO CISD ADDITIONS AND RENOVATIONS AT SAN BENITO HS AND SULLIVAN ELEMENTARY

SAN BENITO

BID PACKAGE "B"
SULLIVAN
ELEMENTARY

STATE OF TEXAS
HERMBERTO CAVAZOS
103450
LICENSED
PROFESSIONAL ENGINEER
8/5/19

COPYRIGHT 2019
GOMEZ MENDEZ SAENZ INC.
ARCHITECTS-PLANNERS

DATE	August 5, 2019
SCALE	As Shown
DRAWN	IG, JA, CW
JOB	192-538
SHEET	BS2.2

GREEN, RUBIANO & ASSOCIATES
CONSULTING STRUCTURAL ENGINEERS
1230 WEST HARRISON
HARLINGEN, TEXAS 78550
(956)428-4461 (956)428-0267 FAX
FIRM REGISTRATION # F-4149

COPYRIGHT 2019 BY GREEN, RUBIANO & ASSOCIATES

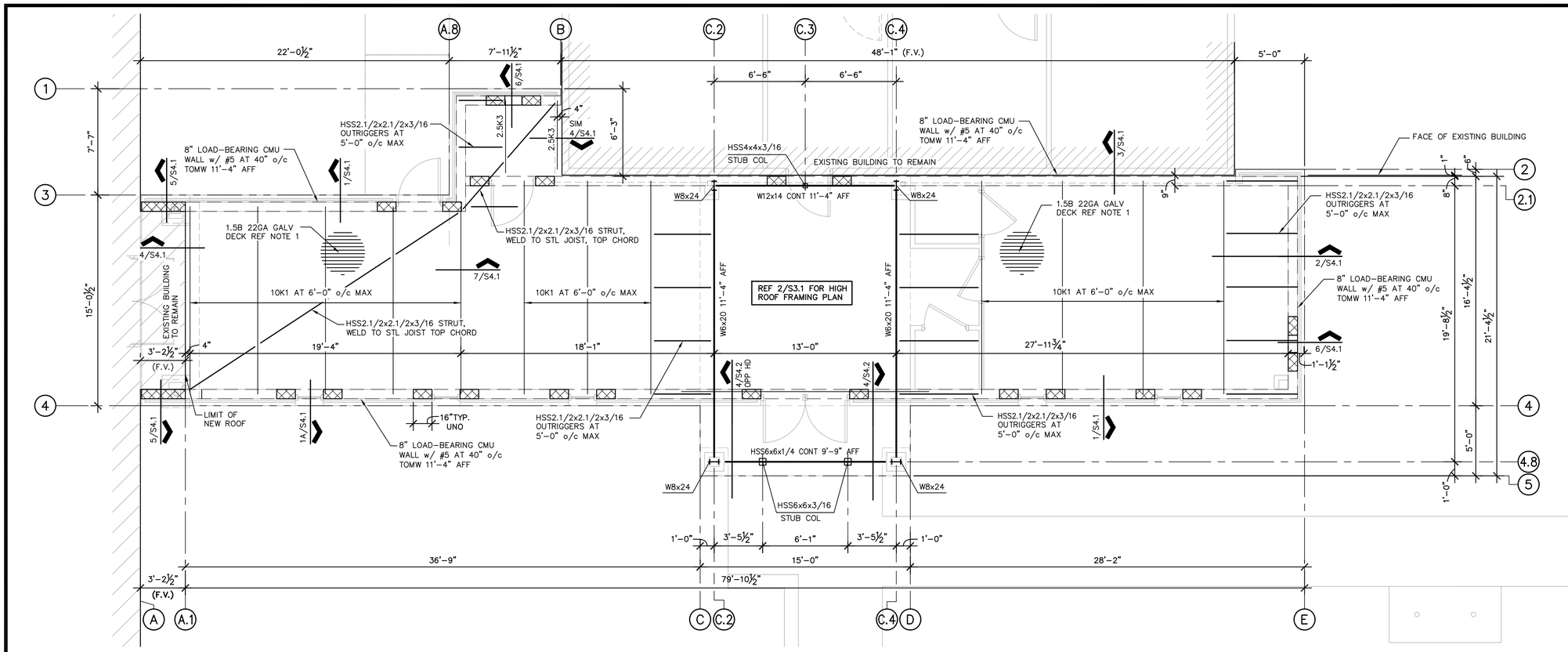

1 LOW ROOF FRAMING PLAN

1/4" = 1'-0" SULLIVAN ELEMENTARY

N PLAN NORTH

NOTES:

1. ROOF DECK SHALL BE 1.5B 22GA GALV DECK BY VULCRAFT OR APPROVED EQUAL. (Ip=0.155 IN⁴/FT; In=0.183 IN⁴/FT; SP=0.186 IN³/FT; Sn=0.192 IN³/FT; Fy=33KSI). ATTACH DECK TO SUPPORTS USING 5/8" PUDDLE WELDS ON A 36/5 PATTERN AND 2-#10 TEK SCREW SIDE LAP FASTENERS.
2. ▨ INDICATES 8" CMU w/ #5 VERTICAL BARS AT 8" o/c.
3. REF SHEET S3.2 FOR BRACE AND FRAME PROFILES.
4. REFERENCE 3/S3.1 FOR SPECIAL JOIST PROFILES.
5. REFERENCE MEP FOR EXACT LOUVER LOCATIONS.

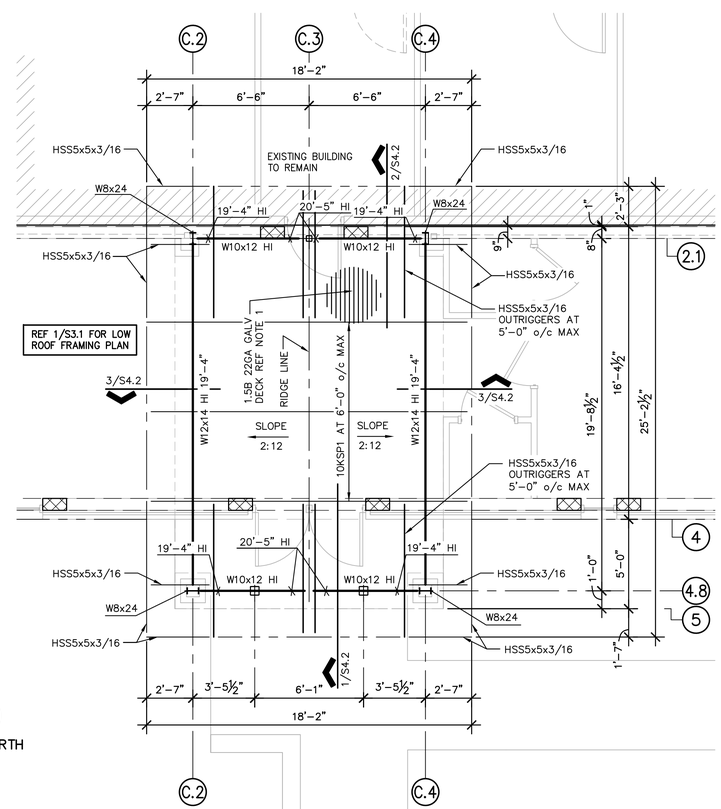

2 HIGH ROOF FRAMING PLAN

1/4" = 1'-0" SULLIVAN ELEMENTARY

N PLAN NORTH

NOTES:

1. REFERENCE 1/S3.1 FOR ADDITIONAL INFORMATION.

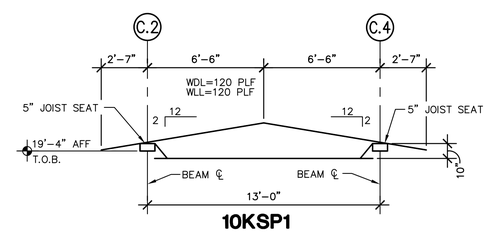

3 SPECIAL JOIST PROFILES

1/4" = 1'-0"

NOTES:

1. WDL AND WLL INDICATE UNIFORM DEAD LOAD & LIVE LOAD ON STEEL JOIST, RESPECTIVELY.
2. SPECIAL JOIST SHALL BE LIMITED TO A DEFLECTION LIMIT OF L/240 FOR TOTAL LOAD AND L/360 FOR LIVE LOAD, UNLESS NOTED OTHERWISE.
3. SPECIAL JOIST 10KSP1 SHALL BE LIMITED TO A MAXIMUM DEFLECTION OF 1/4" AT ITS EXTENDED END.
4. SPECIAL JOISTS SHALL BE DESIGNED FOR A MAXIMUM NET UPLIFT OF 30 PSF.

No.	REVISIONS	BY

GMS ARCHITECTS
1150 paredes line rd.
brownsville
texas 78526
(956) 546-0110
fax (956) 546-0196

SAN BENITO CISD
ADDITIONS AND RENOVATIONS AT SAN BENITO HS AND SULLIVAN ELEMENTARY
SAN BENITO TEXAS

BID PACKAGE "B"
SULLIVAN ELEMENTARY

STATE OF TEXAS
HERIBERTO CAVAZOS
103450
LICENSED PROFESSIONAL ENGINEER
8/5/19

COPYRIGHT 2019
GOMEZ MENDEZ SAENZ INC.
ARCHITECTS-PLANNERS

DATE	August 5, 2019
SCALE	As Shown
DRAWN	IG, JA, CW
JOB	192-538
SHEET	BS3.1

GREEN, RUBIANO & ASSOCIATES
CONSULTING STRUCTURAL ENGINEERS
1320 WEST HARRISON
HARLINGEN, TEXAS 78551
(956)428-4461 (956)428-0287 FAX
FIRM REGISTRATION # F-4146

COPYRIGHT 2019 BY GREEN, RUBIANO & ASSOCIATES

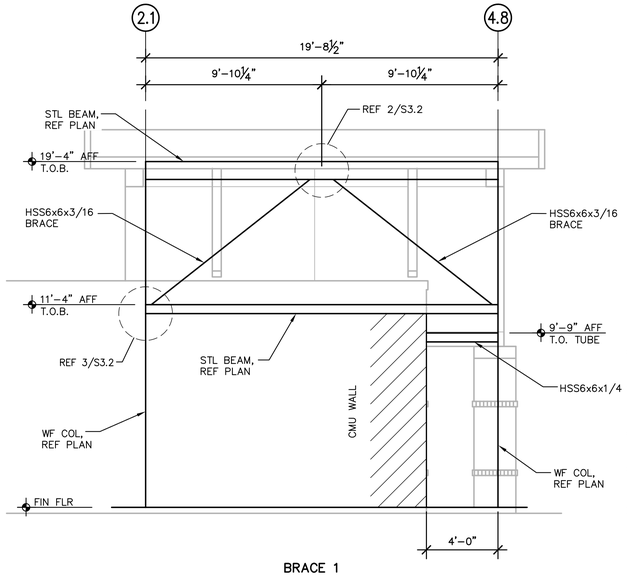

BRACE 1
ALONG GRID C.2

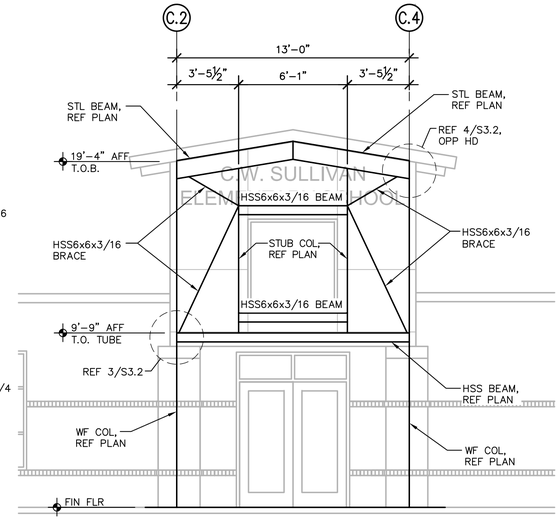

BRACE 2
ALONG GRID 4.8

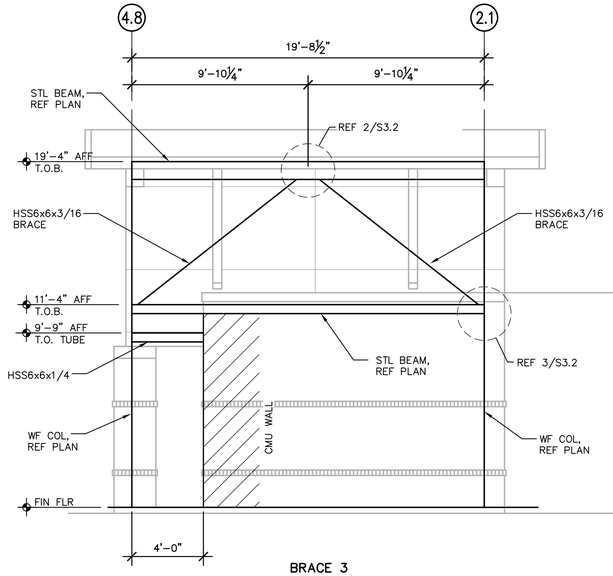

BRACE 3
ALONG GRID C.4

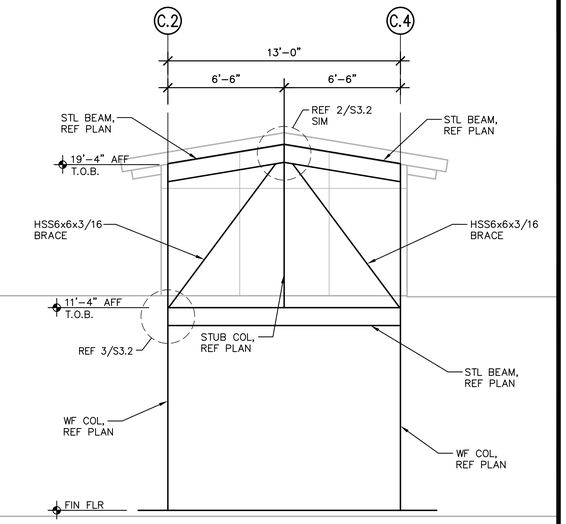

BRACE 4
ALONG GRID 2.1

1 BRACE PROFILES

1/4" = 1'-0"

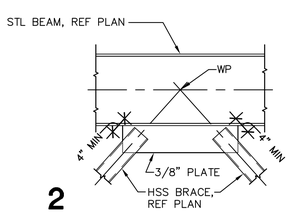

2

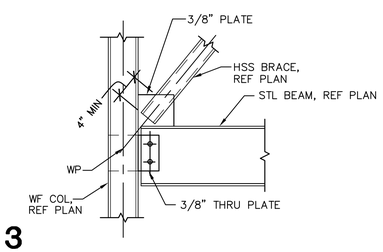

3

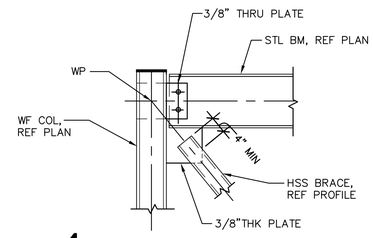

4

No.	REVISIONS	BY

GMS ARCHITECTS

1150 paredes line rd.
brownsville
texas 78526
(956) 546-0110
fax (956) 546-0196

SAN BENITO CISD
ADDITIONS AND RENOVATIONS AT SAN BENITO HS AND SULLIVAN ELEMENTARY

SAN BENITO TEXAS

BID PACKAGE "B"
SULLIVAN ELEMENTARY

STATE OF TEXAS
HERMENEGILDO CAVAZOS
103450
LICENSED
PROFESSIONAL ENGINEER
8/5/19

COPYRIGHT 2019
GOMEZ MENDEZ SAENZ INC.
ARCHITECTS-PLANNERS

DATE	August 5, 2019
SCALE	As Shown
DRAWN	IG, JA, CW
JOB	192-538
SHEET	BS3.2

GREEN, RUBIANO & ASSOCIATES
CONSULTING STRUCTURAL ENGINEERS
1230 WEST HARRISON
HARLINGEN, TEXAS 78551
(956)428-4461 (956)425-0257 FAX
FIRM REGISTRATION # F-4149

COPYRIGHT 2019 BY GREEN, RUBIANO & ASSOCIATES

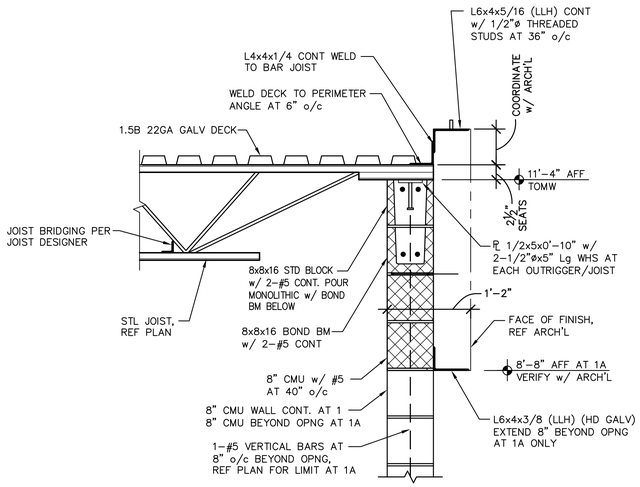

1,1A

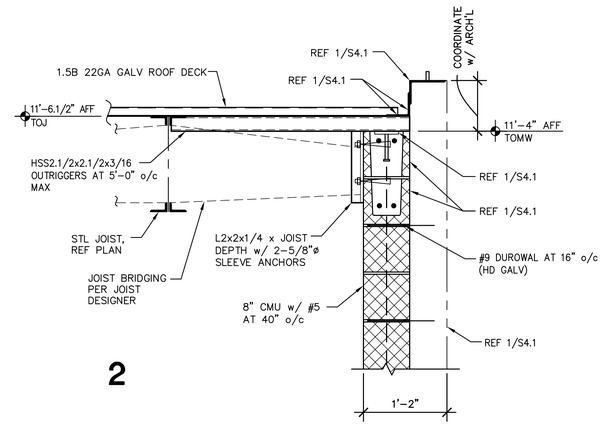

2

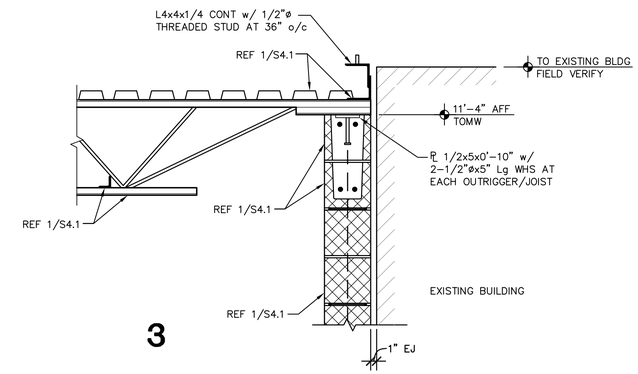

3

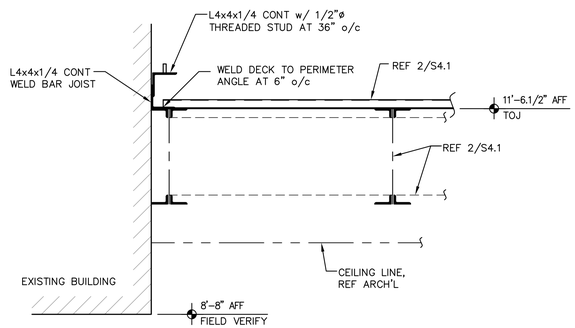

4

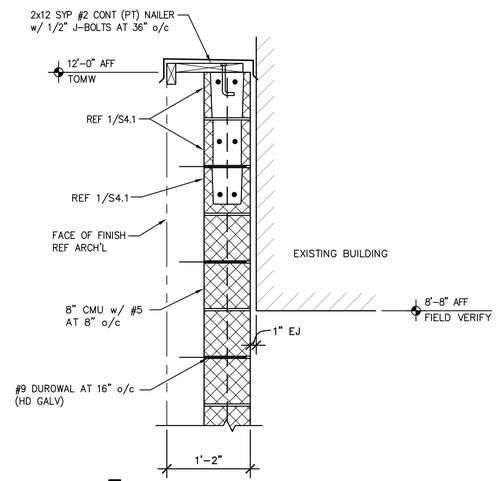

5

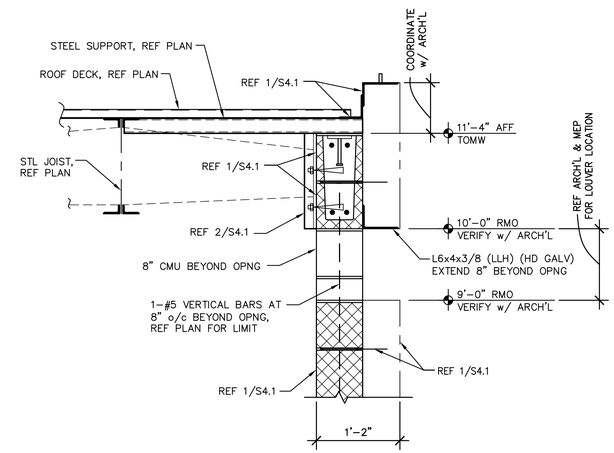

6 TYPICAL LOUVER OPNG DETAIL

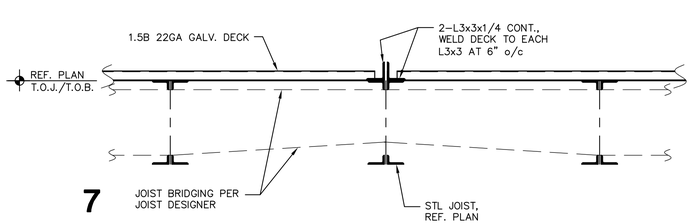

7

No.	REVISIONS	BY

GMS ARCHITECTS
1150 paredes line rd.
brownsville
texas 78526
(956) 546-0110
fax (956) 546-0196

SAN BENITO CISD
ADDITIONS AND RENOVATIONS AT SAN BENITO HS AND SULLIVAN ELEMENTARY
SAN BENITO TEXAS

BID PACKAGE "B"
SULLIVAN ELEMENTARY

STATE OF TEXAS
HERIBERTO CAVAZOS
103450
LICENSED
PROFESSIONAL ENGINEER
8/5/19

COPYRIGHT 2019
GOMEZ MENDEZ SAENZ INC.
ARCHITECTS-PLANNERS

DATE	August 5, 2019
SCALE	As Shown
DRAWN	IG, JA, CW
JOB	192-538
SHEET	BS4.1

GREEN, RUBIANO & ASSOCIATES
CONSULTING STRUCTURAL ENGINEERS
1220 WEST HARRISON
HARLINGEN, TEXAS 78551
(956)428-4491 (956)428-0267 FAX
FIRM REGISTRATION # F-4145

COPYRIGHT 2019 BY GREEN, RUBIANO & ASSOCIATES

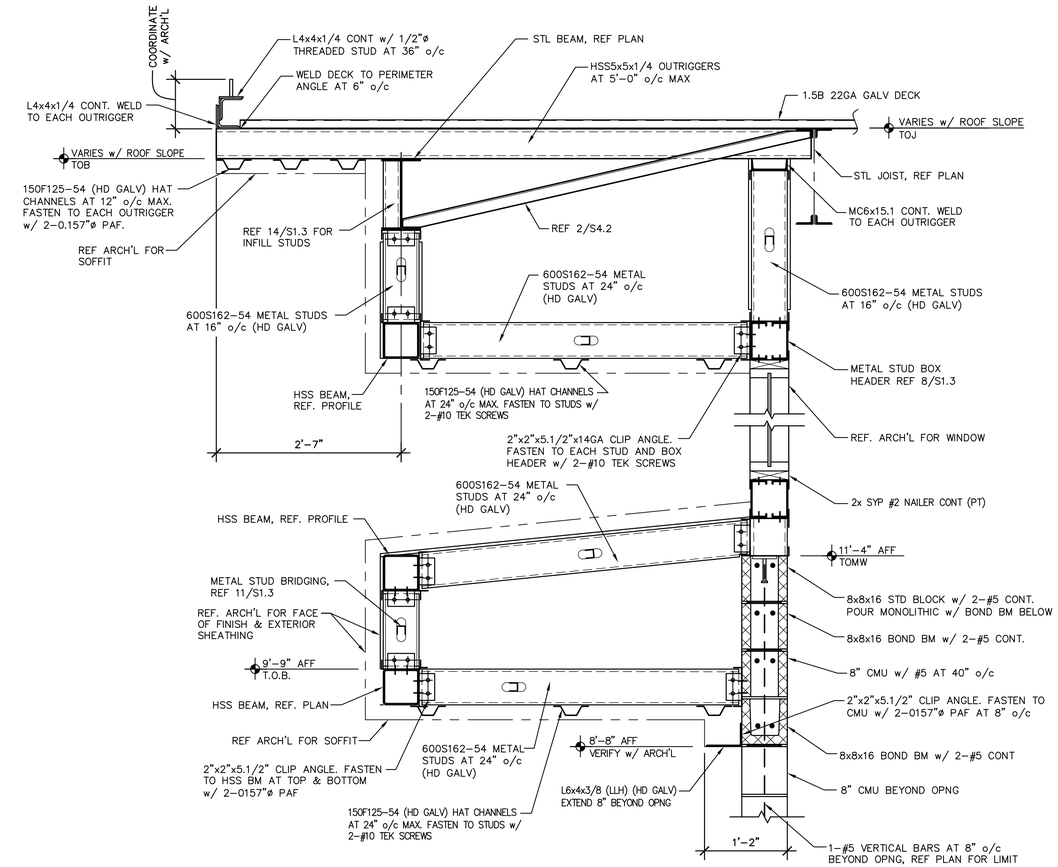

1

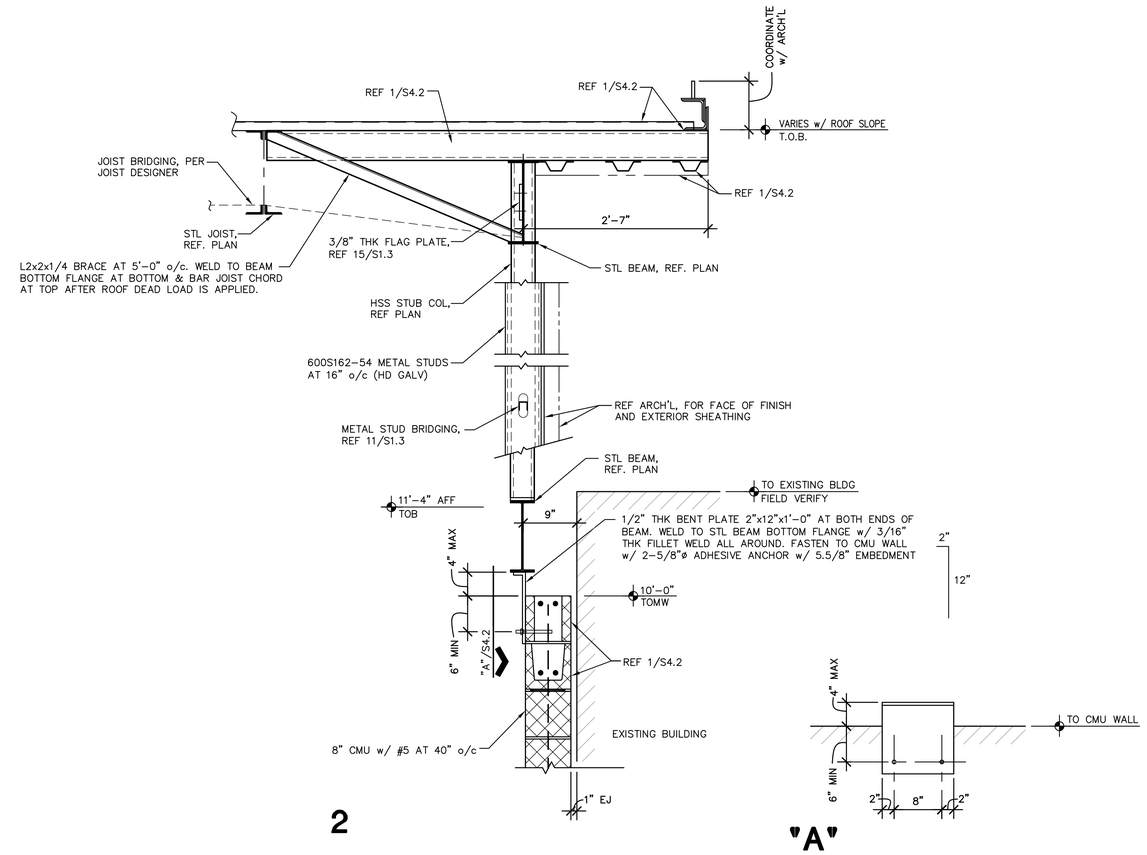

2

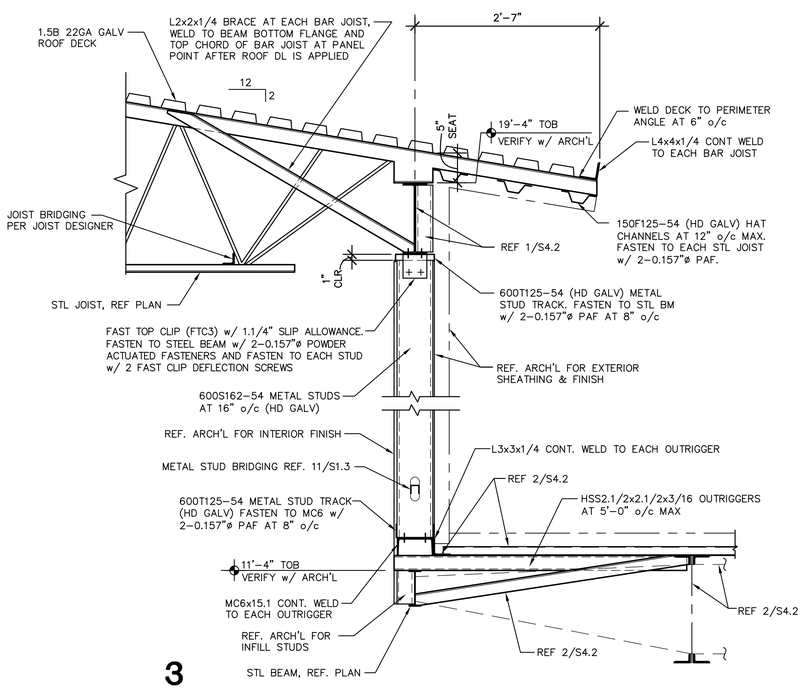

3

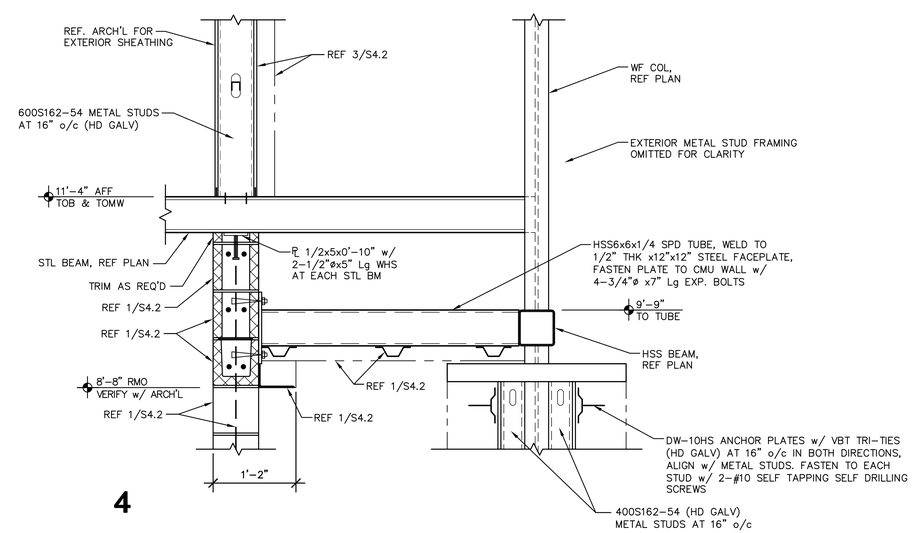

4

GREEN, RUBIANO & ASSOCIATES
CONSULTING STRUCTURAL ENGINEERS
1220 WEST HARRISON
HARLINGEN, TEXAS 78550
(956)428-4491 (956)428-0287 FAX
FIRM REGISTRATION # F-4145

COPYRIGHT 2019 BY GREEN, RUBIANO & ASSOCIATES

No.	REVISIONS	BY

GMS ARCHITECTS
1150 paredes line rd.
brownsville
texas 78526
(956) 546-0110
fax (956) 546-0196

SAN BENITO CISD ADDITIONS AND RENOVATIONS AT SAN BENITO HS AND SULLIVAN ELEMENTARY

SAN BENITO TEXAS

BID PACKAGE "B"
SULLIVAN ELEMENTARY

STATE OF TEXAS
HERIBERTO CAVAZOS
103450
LICENSED PROFESSIONAL ENGINEER
8/5/19

COPYRIGHT 2019
GOMEZ MENDEZ SAENZ INC.
ARCHITECTS-PLANNERS

DATE	August 5, 2019
SCALE	As Shown
DRAWN	IG, JA, CW
JOB	192-538
SHEET	BS4.2

COORDINATION:

1. GENERAL:
   a. CONTRACTOR SHALL REVIEW COMPLETE DOCUMENTS PRIOR TO SUBMITTAL OF PROPOSAL TO GAIN COMPLETE UNDERSTANDING OF PROJECT SCOPE, WORK BY OTHERS, AND MECHANICAL WORK ASSOCIATED WITH OTHER DISCIPLINES.
   b. IT IS NOT THE INTENT OF THESE DOCUMENTS TO DICTATE WHO MUST DO THE WORK. ALL WORK SHOWN IS THE RESPONSIBILITY OF THE (PRIME) CONTRACTOR. COORDINATE MECHANICAL WITH OTHER TRADES SUCH AS PLUMBING, ELECTRICAL AND STRUCTURAL WORK. COORDINATE SCHEDULE OF WORK WITH ALL SUB-CONTRACTORS TO ACHIEVE SMOOTH FLOW OF CONSTRUCTION.
   c. TIME OR MONEY ALLOWANCES WILL NOT BE MADE TO ACCOMMODATE UTILITY CONFLICTS THAT CAN BE REASONABLY RESOLVED BY COORDINATION DURING SHOP DRAWING STAGE.
   d. PROVIDE COORDINATION DRAWINGS OF REFLECTED CEILING PLAN AND SECTION ABOVE CEILING SHOWING WORK OF ALL AFFECTED TRADES. DO NOT PROCEED WITH FABRICATION WORK UNTIL COORDINATION DRAWINGS HAVE BEEN APPROVED BY A/E.
2. SITE:
   a. TIME OR MONEY ALLOWANCES WILL NOT BE MADE TO ACCOMMODATE UTILITY CONFLICTS THAT CAN BE REASONABLY RESOLVED BY COORDINATION DURING SHOP DRAWING STAGE.
3. ARCHITECTURAL AND STRUCTURAL:
   a. REFER TO ARCHITECTURAL AND STRUCTURAL PLANS FOR DETAILS OF CONSTRUCTION, INCLUDING BEAMS, FLOOR AND WALL PENETRATIONS, CHASES, AND REFLECTED CEILING PLANS. VERIFY OPENING SIZES WITH EQUIPMENT FURNISHED.
   b. SLEEVE ALL EXTERIOR WALL AND GRADE BEAM PENETRATIONS. GRADE BEAM PENETRATIONS SHALL BE MADE WITHIN MIDDLE 1/3 OF VERTICAL SPAN OF BEAM.
   c. SEAL AROUND DUCTS AND PIPING AT ALL WALLS, A/C ROOMS AND WALL LOUVER PENETRATIONS WITH FIREPROOF CAULKING. RE: SPECS. PROVIDE ESCUTCHEON PLATES AND FLASHING AROUND PENETRATION, BOTH INSIDE AND OUTSIDE, TO PROVIDE FINISHED LOOK.
4. SPATIAL COORDINATION:
   a. COORDINATE ALL WORK WITH OTHER TRADES; COORDINATE SCHEDULE OF WORK WITH ALL SUB-CONTRACTORS TO ACHIEVE SMOOTH FLOW OF CONSTRUCTION.
   b. SPACES ABOVE CEILING ARE CONGESTED. DESIGN INTENT IS THAT UTILITIES BE INSTALLED TIGHT AGAINST CEILING STRUCTURE TO EXTENT POSSIBLE, WHILE RETAINING ADEQUATE MAINTENANCE ACCESS PER CODES.
   c. IN CASE OF CONFLICTS, ITEMS SHALL BE ARRANGED ACCORDING TO THE FOLLOWING PRIORITIES: LIGHTING, FIRE PROTECTION, HVAC. PROVIDE OFFSETS/RISES/DROPS REQUIRED TO RESOLVE CONFLICTS WITH OTHER UTILITIES, AND TO ACCOMMODATE ALL UTILITIES ABOVE CEILINGS.
   d. IN GENERAL, REROUTE SMALLER DUCTS/PIPES THROUGH JOISTS TO RESOLVE CONFLICTS WITH LARGER. PERFORM REROUTING IN MOST EFFICIENT MANNER POSSIBLE, AND IN ACCORDANCE WITH INDUSTRY STANDARDS.
   e. PROVIDE COORDINATION DRAWINGS OF REFLECTED CEILING PLAN AND SECTION ABOVE CEILING SHOWING WORK OF ALL AFFECTED TRADES. DO NOT PROCEED WITH FABRICATION WORK UNTIL COORDINATION DRAWINGS HAVE BEEN APPROVED BY A/E.
   f. IN GENERAL ROUTE DUCTS/PIPES IN MOST EFFICIENT MANNER POSSIBLE, AND IN ACCORDANCE WITH INDUSTRY STANDARDS.
   g. SEE ELECTRICAL PLANS FOR EXACT LOCATION OF ELECTRICAL PANELS TO AVOID DUCTWORK AND PIPING RUNNING OVER THESE AREAS. COORDINATE WITH ELECTRICAL CONTRACTOR.
   h. LOCATE AIR DEVICES AS SHOWN. COORDINATE WITH OTHER TRADES TO AVOID CONFLICT AND ADJUST LOCATION IF NEEDED WITHOUT COMPROMISING AIR DEVICES PERFORMANCE.
5. CONTROLS:
   a. REFER TO SPECIFICATIONS FOR CONTROL COMPONENTS AND DEVICES TO BE COORDINATED WITH MECHANICAL WORK.
   b. CONTROLS CONTRACTOR SHALL PROVIDE BUILDING AUTOMATION SYSTEM (BAS) THAT CONTROLS EQUIPMENT SHOWN ON DRAWINGS. CONTROLS CONTRACTOR IS RESPONSIBLE FOR INSTALLING LOW VOLTAGE POWER AND COMMUNICATIONS. REFERENCE SPECIFICATIONS FOR CONTROL COMPONENTS AND SEQUENCING TO BE COORDINATED W/ MECH. WORK.
   c. DRAWINGS SHOW GENERAL LOCATION OF DDC SENSORS (T, RH, AND CO2). UNLESS NOTED OTHERWISE, INSTALL SENSORS AT 48" ABOVE FINISHED FLOOR. WIRING SHALL BE IN CONCEALED WALLS. IN CASE OF CONFLICTS WITH FURNITURE, WINDOWS, ETC., COORDINATE EXACT LOCATION WITH ARCHITECT AND ENGINEER.

EQUIPMENT:

1. EQUIPMENT INSPECTION:
   a. FIELD VERIFY ALL CONDITIONS AND MEASURE DIMENSIONS WITHIN THE BUILDING PRIOR TO ORDERING EQUIPMENT AND/OR PROCEEDING WITH INSTALLATION.
   b. ALL EQUIPMENT SHALL BE FACTORY TESTED, AND CONTRACTOR SHALL VERIFY EQUIMENT CONDITION PRIOR TO INSTALLATION. CONTRACTOR IS RESPONSIBLE FOR EQUIPMENT DAMAGED DURING MOVING AND INSTALLATION.
   c. EQUIPMENT FOUND DEFECTIVE PRIOR TO FINAL ACCEPTANCE SHALL BE REPLACED AT NO COST TO OWNER.
2. EQUIPMENT ACCESS:
   a. FOR EQUIPMENT WHICH MAY REQUIRE PERIODIC SERVICING AND WHICH IS LOCATED ABOVE A SUSPENDED CEILING, CONTRACTOR IS TO PROVIDE A MARKER ON CEILING GRID WHICH CLEARLY INDICATES WHICH CEILING TILE IS TO BE REMOVED TO MOST CONVENIENTLY ACCESS EQUIPMENT SIDE NEEDING SERVICING. THE MARKER IS TO BE ROUND DOT OF HEAVY DUTY COLORED PAPER, WITH DIRECTION INDICATION, WITH ADHESIVE BACKING. OBTAIN OWNER APPROVAL FOR COLOR, SIZE, AND TYPE PRIOR TO INSTALLATION.
   b. PROVIDE MANUFACTURER RECOMMENDED AND CODE ENFORCED CLEARANCES AROUND EQUIPMENT. MAINTAIN 36" CLEAR IN FRONT OF VAV BOX CONTROLLER, ELECTRIC HEATERS, ETC.
   c. INSTALL ALL VALVES, CONTROLS, DAMPERS, FANS, ETC. IN ACCESSIBLE LOCATIONS. PROVIDE ADEQUATELY SIZED ACCESS DOORS WHERE REQUIRED.
3. EQUIPMENT INSTALLATION:
   a. PROVIDE SPRING HANGER TYPE VIBRATION ISOLATORS TO SUPPORT SUSPENDED AHUS, FANS AND OTHER POWERED VIBRATING EQUIPMENT. PROVIDE FLEXIBLE DUCT CONNECTORS.
   b. FOR ALL AIR CONDITIONING UNITS WHICH ARE LOCATED ABOVE SUSPENDED CEILINGS, OR ABOVE HARDWOOD FLOORS, OR OTHER BUILDING SURFACES / MATERIALS WHICH COULD BE DAMAGED BY LEAKING WATER, PROVIDE A SECONDARY DRAIN PAN BENEATH THE UNIT, WITH EITHER: A) A SEPARATE CONDENSATE DRAIN LINE, COPPER, INSULATED WITH 1/2" ARMAFLEX, AND PIPED TO A SUITABLE DISPOSAL POINT (SUCH AS TO A LAVATORY DRAIN TAILPIECE, FLOOR DRAIN, ETC; DO NOT TERMINATE SECONDARY DRAIN PIPE THROUGH A SUSPENDED CEILING WHERE IT WILL DRIP INTO A SINK OR LAVATORY UNLESS APPROVED BY ENGINEER); OR B) A FLOAT SWITCH OR MOISTURE SENSING SWITCH, LOCATED IN SECONDARY DRAIN PAN, AND ELECTRICALLY INTERLOCKED WITH UNIT FAN TO TURN UNIT OFF WHEN MOISTURE IS SENSED.
   c. COMPLETELY WEATHERPROOF ALL EQUIPMENT, DUCTS, PIPES AND OTHER DEVICES AND MATERIALS INSTALLED OUTSIDE THE BUILDING, IN PARKING AREA, OR OTHERWISE EXPOSED TO WEATHER. AS A MINIMUM, WEATHERPROOFING SHALL INCLUDE, BUT IS NOT LIMITED TO THE FOLLOWING: JACKETING FOR ALL PIPING INSULATION, VALVES AND ACCESSORIES RATED FOR OUTDOOR SERVICE, ELECTRICAL ENCLOSURES NEMA 4X-SS. PROVIDE ELECTRICAL HEAT TRACING FOR UTILITIES SUSCEPTIBLE TO FREEZING.
   d. AFFIX ID TAGS TO ALL MECHANICAL EQUIPMENT PER SPECIFICATIONS.
4. EQUIPMENT INSULATION:
   a. INSULATE ALL SURFACES THAT ARE CAPABLE OF BECOMING COLD AND COLLECTING CONDENSATE. THIS INCLUDES SUPPLY DIFFUSERS AND CONNECTING DUCTWORK / TRANSITION PIECES.
5. PLUMBING:
   a. PROVIDE CODE RECOMMENDED CLEARANCE OR MINIMUM 10' BETWEEN EXHAUST FANS DISCHARGES, PLUMBING VENTS AND AIR INTAKES. COORDINATE LOCATIONS WITH PLUMBING CONTRACTOR.
   b. PROVIDE INSULATED AND TRAPPED COPPER CONDENSATE DRAIN LINES FROM ALL AIR CONDITIONING EQUIPMENT AND TERMINATE TO NEAREST FLOOR DRAIN OR OTHER APPROVED RECEPTACLES. COORDINATE DRAINS WITH PLUMBING.
6. ELECTRICAL:
   a. CONTRACTOR IS RESPONSIBLE FOR COORDINATION WITH ELECTRICAL CONTRACTOR REGARDING EQUIPMENT SIZES AND TYPES OF ELECTRICAL INTERFACE EQUIPMENT REQUIRED.
   b. DUE TO VARIATIONS IN EQUIPMENT CHARACTERISTICS BY DIFFERENT EQUIPMENT SUPPLIERS, MECHANICAL EQUIPMENT ULTIMATELY PROVIDED MAY DIFFER IN HORSEPOWER OR AMPERAGE REQUIREMENTS FROM THAT SPECIFIED IN THESE DRAWINGS. COORDINATE WITH GENERAL CONTRACTOR PRIOR TO BIDDING, AND PRIOR TO SUBMITTALS AND ORDERING EQUIPMENT, TO ENSURE THAT EQUIPMENT ELECTRICAL REQUIREMENTS ARE CONVEYED TO ELECTRICAL CONTRACTOR. IT IS SOLELY CONTRACTOR'S RESPONSIBILITY TO ENSURE COMPATIBILITY ISSUES ARE COORDINATED.

DUCTWORK:

1. DUCTWORK GENERAL:
   a. DRAWINGS ARE DIAGRAMMATIC IN NATURE. FOR CLARITY SAKE, MOST DUCT OFFSETS/RISES/DROPS ARE NOT SHOWN. WHERE DUCTS PENETRATE WALLS, INSTALL THEM PERPENDICULAR TO WALL.
   b. RECTANGULAR AND ROUND DUCTWORK SHALL BE GALVANIZED STEEL. SIZES SHOWN ARE INSIDE CLEAR DIMENSION, UNLESS NOTED OTHERWISE.
   c. VERIFY BOTTOM OF DUCT ELEVATION AND COORDINATE WITH OTHER TRADES.
   d. CONSTRUCT AND LEAKAGE TEST ALL DUCTWORK BASED ON SPECIFICATIONS AND SMACNA REQUIREMENTS, WHICHEVER IS MORE STRINGENT. COORDINATE PRESSURE CLASSES WITH EQUIPMENT SCHEDULES.
   e. FLEXIBLE DUCTS MAXIMUM LENGTH SHALL NOT EXCEED 6 FEET. USE OF FLEXIBLE DUCTWORK IS LIMITED TO AREAS WITH AN ACCESSIBLE SUSPENDED CEILING. PINCHED DUCT WILL HAVE TO BE REPLACED.
   f. IN AREAS WHERE DUCT CONFLICTS CANNOT BE AVOIDED, ROUTE SMALLER DUCTS THROUGH ROOF JOISTS.
   g. LOCATE AIR DEVICES AS SHOWN. COORDINATE WITH ELECTRICAL, IF NEEDED. RELOCATE DIFFUSER TO ADJACENT TILE.
2. DUCTWORK INSULATION:
   a. WRAP ALL OUTSIDE AIR, SUPPLY AND RETURN DUCTWORK UNLESS NOTED OTHERWISE.
   b. IN ADDITION, FOR ACOUSTICAL PERFORMANCE INTERNALLY LINE FIRST 10' OF SUPPLY AND LAST 10' OF RETURN DUCTWORK.
   c. PROVIDE ACOUSTICAL LINING FOR ALL TRANSFER DUCTS AND RETURN AIR ELBOWS.
   d. INSULATION ON DUCT SHOULD TO BE PROPERLY TAPED AND MASTICS MUST BE APPLIED ON SEAMS AND JOINTS AND AT ENDS ADJACENT TO DUCT FLANGES AND FITTINGS. FOR DUCT SIDES WITH DIMENSIONS LARGER THAN 18 INCHES, APPLY ADDITIONAL PINS AND CLIPS TO HOLD INSULATION TIGHTLY AGAINST SURFACE AT CROSS BRACING.
   e. INSULATE ALL EXHAUST DUCTWORK 10 FEET FROM EXTERIOR OPENING.
3. DUCT FITTINGS:
   a. WHERE RECTANGULAR TEE FITTINGS ARE SHOWN, PROVIDE FITTING WITH ADJUSTABLE DIVIDER SHEET AND TURNING VANES.
   b. WHERE RECTANGULAR MAIN AND BRANCH CONNECTIONS ARE SHOWN, PROVIDE EXTRACTOR VANES. NOT APPLICABLE TO DUCTWORK DOWNSTREAM OF VAV BOXES.
   c. PROVIDE TURNING VANES IN ALL ELBOWS PER SPECS.
4. DAMPERS:
   a. IN AN ACCESSIBLE LOCATION, PROVIDE MANUAL-TYPE VOLUME BALANCING DUCT DAMPERS IN ALL SUPPLY, RETURN AND EXHAUST DUCT BRANCHES TO INDIVIDUAL GRILLES, REGISTERS AND DIFFUSERS (GRD). TO MINIMIZE NOISE INSTALL DAMPERS CLOSER TO THE BRANCH CONNECTION THAN TO THE GRD. IN DUCTWORK, PROVIDE ACCESS DOORS TO ALL DAMPERS.
   b. ABOVE INACCESSIBLE CEILINGS AND IN CASE DUCT CONFIGURATION DOES NOT ALLOW FOR INSTALLATION OF DAMPER IN DUCTWORK, PROVIDE REMOTE MANUAL DAMPER BY YOUNG REGULATOR OR EQUAL, (CABLE OPERATED SYSTEM) WITH ENGINEER'S PERMISSION CONTRACTOR MAY PROVIDE VOLUME DAMPER THAT IS INTEGRAL TO GRD.
   c. PROVIDE BALANCING DAMPERS ON ALL EXHAUST GRILLES TO ACHIEVE DESIRED AIRFLOW.
   d. PROVIDE DYNAMIC FIRE DAMPERS (RUSKIN DIDB20, TYPE B OR EQUAL) IN ACCORDANCE WITH CODE REQUIREMENT, IN ALL PENETRATIONS OF FIRE RATED WALLS, OCCUPANCY SEPARATION WALLS, BARRIERS AND PARTITIONS, AND EXIT CORRIDORS. REFER TO ARCHITECTURAL PLANS FOR RATED WALLS. PROVIDE ACCESS DOORS AS PER CODE REQUIREMENTS, EQUAL TO RUSKIN ADH-22 FOR RECTANGULAR DUCT, ACUDOR RD FOR ROUND DUCT. WHERE GRILLE ACCESS IS INDICATED, ADDITIONAL DUCT ACCESS DOOR IS NOT REQUIRED. WHERE THE CEILING IS FIRE RATED PROVIDE FIRE RATED AIR DEVICES FOR TRANSFER & RETURN AIR GRILLES AND SUPPLY AIR DIFFUSERS AS PER CODE REQUIREMENTS. REFER TO ARCHITECTURAL PLANS FOR RATED CEILINGS.
   e. PROVIDE ACCESS DOORS (NOT SHOWN IN DRAWINGS) FOR INSPECTION OF DUCT MOUNTED EQUIPMENT SUCH AS FIRE/SMOKE DAMPERS, MANUAL BALANCING DAMPERS AND TURNING VANES. IN AREAS WITH HARD CEILING COORDINATE ACCESS DOOR LOCATIONS AND CEILING ACCESS PANELS WITH OTHER TRADES.

INSULATION:

1. FIBERGLASS INSULATION MAY NOT BE USED ON ANY COLD PIPING SURFACES; ONLY CLOSED CELL INSULATION IS ACCEPTABLE.
2. PROVIDE INSULATION ON ALL SURFACES CAPABLE OF CREATING CONDENSATION.

CODES & ORDINANCES:

1. GENERAL:
   a. UNLESS DRAWINGS OR SPECIFICATIONS HAVE MORE STRINGENT REQUIREMENTS, PERFORM ALL WORK PER APPLICABLE VERSION OF INTERNATIONAL BUILDING CODES, AND LOCAL CODES AND ORDINANCES.
   b. PRIOR TO SUBMITTING PROPOSAL, NOTIFY ENGINEER OF ANY ASPECTS OF DESIGN WHICH ARE THOUGHT TO BE IN NONCOMPLIANCE WITH APPLICABLE CODES.
2. PERMITS:
   a. CONTRACTOR IS RESPONSIBLE FOR ALL PERMITS AND FEES ASSOCIATED WITH PROJECT, INCLUDING FEES FOR INSPECTIONS, APPLICATIONS, AND PROVISION OF NEW SERVICES.
   b. CONTRACTOR WHO WILL ACTUALLY PERFORM WORK MUST APPLY FOR ALL REQUIRED PERMITS.
4. APPROVALS AND INSPECTIONS:
   a. OBTAIN APPROVAL FROM CITY FIRE DEPARTMENT AND BUILDING AND SAFETY DEPARTMENT PRIOR TO INSTALLATION OF ANY FIRE RELATED ITEMS.
   b. COORDINATE PRESSURE TESTS, INSPECTIONS AND APPROVAL FOR ALL SYSTEMS WITH PERMITTING OFFICER, OWNER AND ENGINEER.

GENERAL NOTES:

1. CONTRACT RELATED:
   a. COORDINATE WORK AMONG ALL DISCIPLINES. IT IS NOT THE INTENT OF THESE DOCUMENTS TO DICTATE WHO MUST DO THE WORK. ALL WORK SHOWN IS THE RESPONSIBILITY OF THE (PRIME) CONTRACTOR.
   b. WORK TO BE DONE UNDER ALLOWANCES BECOMES AN INTEGRAL PART OF THE PROJECT AND RESPONSIBILITY OF CONTRACTOR ONCE ALLOWANCE IS APPROVED.
   c. CONTRACTOR SHALL NOT PROCEED WITH ANY WORK INVOLVING A CHANGE IN PROJECT SCOPE OR COST WITHOUT FIRST HAVING OBTAINED ENGINEER'S APPROVAL IN WRITING. UNLESS ENGINEER HAS AGREED TO SUCH CHANGE PRIOR TO IT BEING DONE, AND HAS AGREED THAT AN INCREASE IN COST ASSOCIATED WITH SUCH CHANGE IS WARRANTED; CONTRACTOR WILL NOT BE REIMBURSED FOR SUCH CHANGE.
2. TEST & BALANCE:
   a. TEST & BALANCE SHALL BE PERFORMED UNDER GENERAL CONTRACTOR, SEPARATE FROM MECHANICAL CONTRACT. DURING BIDDING, CONTRACTOR SHALL SUBMIT A COPY OF EVIDENCE THAT TAB AGENT MEETS THE QUALIFICATIONS SPECIFIED UNDER DIV. 23 SECTION 230593 TO PRIME CONTRACTOR.
   b. TEST & BALANCE TO COORDINATE MINIMUM AND MAXIMUM OUTSIDE AIR DAMPER SETTINGS WITH DDC CONTROLS AND ENGINEER. PROVIDE TIME ALLOTMENT FOR MULTIPLE DAMPER SETTINGS IN SOME CASES.
   c. CONTRACTOR SHALL COORDINATE TAB ACTIVITIES WITH TAB CONTRACTOR.

CONTROLS:

1. CONTRACTOR SHALL COOPERATE AND COORDINATE WORK ACTIVITIES WITH DDC CONTROLS CONTRACTOR TO ENSURE SMOOTH TROUBLE-FREE INSTALLATION.
2. WHERE NOT SPECIFICALLY INDICATED ON PLANS, DDC CONTRACTOR IS RESPONSIBLE FOR ALL CONTROL RELAYS AND CONTACTORS, POWER TO DDC PANELS, AND OTHER CONTROL ELEMENTS. ALTHOUGH DDC CONTRACTOR MAY COORDINATE WITH OTHER TRADES TO PROVIDE MISCELLANEOUS ELECTRICAL WORK, THE FINAL RESPONSIBILITY FOR ACHIEVEMENT OF CONTROL SEQUENCES LIES WITH DDC CONTRACTOR.
3. ON THE GRAPHIC PAGES FOR ALL EQUIPMENT AND/OR MONITORED DEVICES (SUCH AS SENSORS, METERS, DAMPERS, ETC.) GIVE A CLEAR, GRAPHICAL INDICATION AS TO WHETHER EQUIPMENT OR DEVICE HAS BEEN PLACED IN MANUAL OPERATION, OVERRIDING AUTOMATIC OPERATION. (FOR EXAMPLE, PLACE AN "M" NEXT TO EQUIPMENT HAS BEEN PLACED IN MANUAL OPERATION.)
4. REFER TO OPERATING SEQUENCE IN SPECIFICATIONS FOR ALARMS AND SEQUENCES REQUIRED.
5. PROVIDE FULL COLOR GRAPHICS OF NEW SYSTEMS.
6. INTERCONNECT NEW CONTROLS WITH OWNER'S EXISTING COS.
7. PROVIDE WEB-SERVER. SEE SPECIFICATIONS.
8. RECOMMENDED DIVISION OF RESPONSIBILITIES BETWEEN SUB-CONTRACTORS IS AS FOLLOWS:
   a. WITH OWNER COORDINATE ETHERNET CONNECTION FOR DDC SYSTEM.
   b. WITH ELECTRICAL SUB CONTRACTOR, CONTROL CONTRACTOR COORDINATES 120V POWER WIRING AND CONDUIT TO NEW CONTROLLERS (AND CIRCUIT BREAKERS, IF NO SPARES EXIST).
   c. CONTROLS CONTRACTOR SUPPLIES DAMPERS, ETC. TO MECHANICAL CONTRACTOR FOR INSTALLATION. COORDINATE OUTSIDE AND RETURN AIR DAMPERS WITH AHU MANUFACTURER.
   d. CONTROLS CONTRACTOR IS RESPONSIBLE FOR:
      * DAMPER ACTUATORS
      * GATEWAY INTERFACES AND ALL RELATED ACCESSORIES FOR FULL COMMUNICATION BETWEEN EQUIPMENT AND DDC SYSTEM
      * ADJUSTABLE RANGE/FLAT PLATE THERMOSTATS, RH, CO2 SENSING DEVICES
      * EQUIPMENT CONTROLLERS, SOFTWARE, PROGRAMMING.
      * ALL NETWORK CONTROL PANELS, DDC CONTROLLERS, SOFTWARE, AND PROGRAMMING.
      * WIRING AND CONDUIT FOR CONTROL AND MONITORING DEVICES
      * CONTROL RELAYS
      * SHOP DRAWINGS PER SPECIFICATIONS
      * SYSTEM CHECK OUT, OWNER TRAINING, DDC SYSTEM WARRANTY WORK

ABBREVIATIONS

A	AMPS	ENT.	ENTERING	NO	NORMALLY OPEN
ACCU	AIR COOLED CONDENSING UNIT	EXT.	EXTERNAL OR EXTERIOR	NTS	NOT TO SCALE
ACT	ACTUATOR	FCU	FAN COIL UNIT	OA	OUTSIDE AIR
AFF	ABOVE FINISHED FLOOR	FD	FIRE DAMPER	PH	PHASE
AHU	AIR HANDLING UNIT	FM	FLOW METER	RA	RETURN AIR
B.	BOTTOM	FS	FLOW SWITCH	RAG/RG	RETURN AIR GRILLE
BAS	BUILDING AUTOMATION SYSTEM	FPI	FINS PER INCH	RD	ROOF DRAIN
BOP	BOTTOM OF PIPE	G.	GROUND	RM.	ROOM
BOTT.	BOTTOM	GA.	GAGE	RPZ	REDUCED PRESSURE ZONE
C.	CONDUIT OR COMMON	GALV.	GALVANIZED	SA	SUPPLY AIR
CHR	CHILLED WATER RETURN	GPM	GALLONS PER MINUTE	SD	SUPPLY AIR DIFFUSER
CHS	CHILLED WATER SUPPLY	GRND.	GROUND	SS	STAINLESS STEEL
CHW	CHILLED WATER	HB	HOSE BIBB	SZ	SINGLE ZONE
CHWP	CHILLED WATER PUMP	HP	HORSEPOWER	TAB	TESTING & BALANCING
CR	CONDENSER WATER RETURN	HS	HUMIDITY SENSOR	T.O.L.	TOP OF LOUVER
CS	CONDENSER WATER SUPPLY	HVAC	HEATING, VENTILATION, & AIR CONDITIONING	TS	TEMPERATURE SENSOR
CLG.	CEILING OR COOLING			TSTAT	THERMOSTAT
COMB.	COMBINATION	LVG.	LEAVING	UG	UNDERGROUND
CONC.	CONCRETE	MECH	MECHANICAL	UNO	UNLESS OTHERWISE NOTED
COND.	CONDUIT	MOT. STRTR.	MOTOR STARTER	V	VOLTS
CT	COOLING TOWER	MS	MOTOR STARTER	VAV	VARIABLE AIR VOLUME
CU.	COPPER	MZ	MULTI-ZONE	VFD	VARIABLE FREQUENCY DRIVE
CW	CITY WATER	NC	NORMALLY CLOSED	W	WIRE
DDC	DIRECT DIGITAL CONTROLS				
DMPR.	DAMPER				
DISC.	DISCONNECT				
EAG/EG	EXHAUST AIR GRILLE				
EMS	ENERGY MANAGEMENT SYSTEM				

MECHANICAL SYMBOLS LEGEND

12x12	DUCT SIZE: FIRST FIGURE IS SIDE SHOWN	T	THERMOSTAT
(12x12)	BELOW DUCT SIZE: FIRST FIGURE IS SIDE SHOWN	RH	SPACE HUMIDITY SENSOR
	DIRECTION OF FLOW-RETURN	RH	DUCT HUMIDITY SENSOR
	DIRECTION OF FLOW-SUPPLY	C	SPACE CARBON DIOXIDE SENSOR
		SP	STATIC PRESSURE SENSOR
FD	FIRE DAMPER	C	DUCT CARBON DIOXIDE SENSOR
8"Ø	FLEXIBLE DUCT	CHR	CHILLED WATER RETURN
EG-X / cfm	EXHAUST AIR GRILLE	CHS	CHILLED WATER SUPPLY
		CD	CONDENSATE PIPING
RG/TG-X / cfm	RETURN AIR/TRANSFER AIR GRILLE		BUTTERFLY VALVE
SD-X / cfm	SUPPLY AIR DIFFUSER		MANUAL VALVE
	SIDE TAP WITH DAMPER		AUTOMATIC VALVE
	BACKDRAFT DAMPER		CHECK VALVE
AFR	AUTO-FLOW REGULATOR		PRESSURE GAUGE & COCK
	DRAIN VALVE	TS	TEMPERATURE SENSOR
	BALL VALVE	TW	THERMOMETER WELL

No.	REVISIONS	BY

GMS ARCHITECTS
1150 paredes line rd.
brownsville
texas 78526
(956) 546-0110
fax (956) 546-0196

SAN BENITO CISD
ADDITIONS AND RENOVATIONS AT SAN BENITO HS AND SULLIVAN ELEMENTARY
SAN BENITO TEXAS

BID PACKAGE "B"
SULLIVAN ELEMENTARY

STATE OF TEXAS
CESAR A. GONZALEZ
108611
8.2.2019

COPYRIGHT 2019
GOMEZ MENDEZ SAENZ INC.
ARCHITECTS-PLANNERS

DATE	AUGUST 2, 2019
SCALE	As Shown
DRAWN	ETHOS
JOB	19V32
SHEET	BM1.01

ethos engineering
119 W. VAN BUREN AVE. STE.101
HARLINGEN, TX
PHONE: 956-230-3435
TEXAS REGISTERED
ENGINEERING FIRM
F-15998

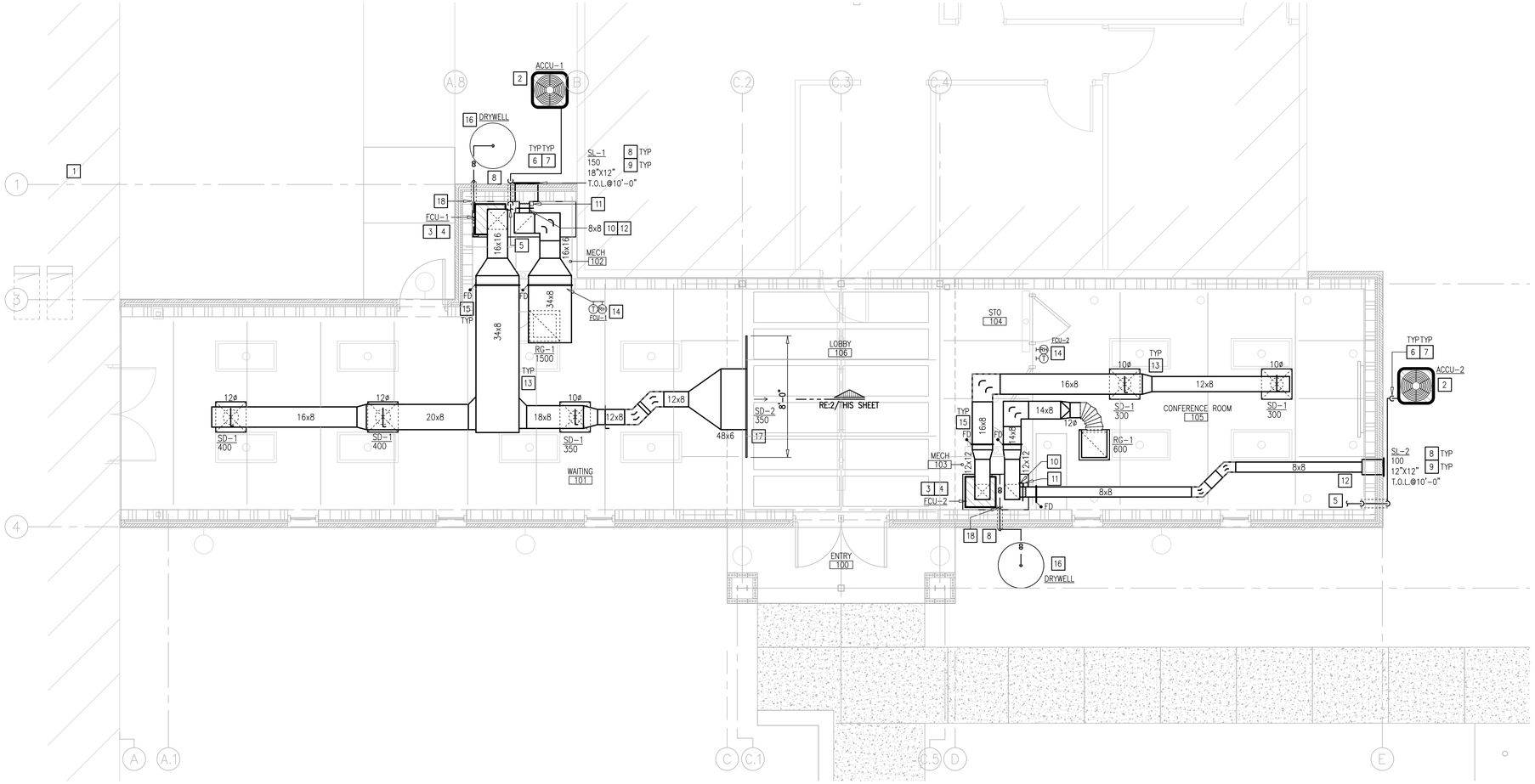

01 SULLIVAN ELEMENTARY MECHANICAL PLAN

SCALE: 1/4" = 1'- 0"

NORTH

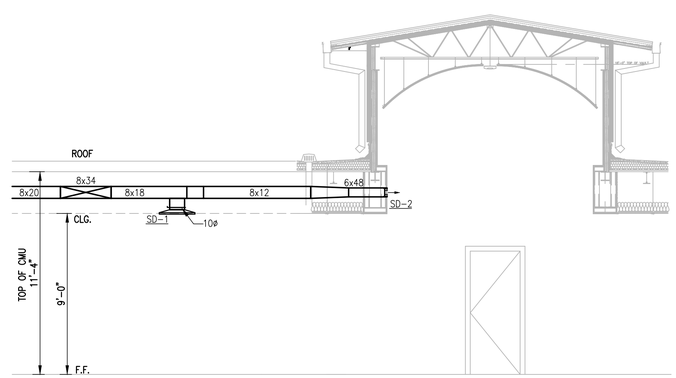

02 MECHANICAL ELEVATION

SCALE: 1/4" = 1'- 0"

KEYED NOTES:

1. CODE AND WORKING CLEARANCE FOR ELECTRICAL PANELS. DO NOT ROUTE DUCT OR PIPING DIRECTLY ABOVE ELECTRICAL EQUIPMENT FOOTPRINT. SEE ELECTRICAL PLANS FOR EXACT LOCATION. (TYPICAL)
2. PROVIDE AIR COOLED CONDENSING UNIT AND INSULATED REFRIGERANT PIPING PER SPECIFICATIONS. MAINTAIN MANUFACTURER'S RECOMMENDED CLEARANCES AND PROVIDE CONCRETE PAD PER PER STRUCTURAL PLANS. REFRIGERANT PIPING SHOWN IS STRICTLY SCHEMATIC, VERIFY NUMBER OF CIRCUITS AND PIPE SIZES WITH MANUFACTURER'S DATA.
3. PROVIDE FAN COIL UNIT AS SCHEDULED. PROVIDE WATER LEVEL DETECTION DEVICE THAT WILL SHUT-OFF THE FCU PRIOR TO OVERFLOW. AUXILIARY DRAIN SYSTEM SHALL BE AS PER IMC-2012 SECTION 307.2.3. SEE DETAIL SHEET. ROUTE COPPER CONDENSATE LINE TO DRYWELL AND INSULATE PER SPECIFICATIONS. DROP REFRIGERANT LINES NEXT TO UNIT TO AVOID INTERFERENCE WITH MAINTENANCE ACCESS. POSITION UNIT TO ALLOW REQUIRED CLEARANCES.
4. PROVIDE FCU PLATFORM USING 3" X 3" X 1/4" GALVANIZED STEEL ANGLE IRON WITH WELDED JOINTS. ENCLOSE PLATFORM USING 1" THICK MOISTURE RESISTANT PLYWOOD AND BOLT TO BRACKET WITH 1/4" GALVANIZED BOLTS. COORDINATE PLATFORM SIZE ON SITE. SET UNIT ON 1/2" NEOPRENE PAD ON PLATFORM. PLATFORM TO BE USED AS A RETURN AIR PLENUM AND BE SEALED AIRTIGHT.
5. ROUTE REFRIGERANT PIPING TO INDOOR UNIT. COORDINATE ROUTING WITH OTHER TRADES PRIOR TO INSTALLATION. SLEEVE WALL PENETRATION. SEAL AIRTIGHT AROUND PIPE PENETRATION. (TYPICAL)
6. PROVIDE REFRIGERANT LINE SUPPORTS. SEE ASSOCIATED DETAIL. (TYPICAL)
7. PROVIDE 1" INSULATION & ALUMINUM METAL JACKET ON EXPOSED REFRIGERANT LINES. SEE SPECIFICATIONS. PROVIDE REFRIGERANT LINE SUPPORTS PER SPECIFICATIONS. SEE ASSOCIATED DETAIL. (TYPICAL)
8. SLEEVE ALL WALL PENETRATIONS PER SPECIFICATIONS. SEAL AROUND DUCTS & PIPING AT ALL WALLS, AC ROOMS AND WALL LOUVER PENETRATIONS WITH FIRE-PROOF CAULKING. PROVIDE ESCUTCHEON PLATES AND FLASHING AROUND PENETRATION, BOTH INSIDE AND OUTSIDE TO PROVIDE A FINISH LOOK. (TYPICAL)
9. PROVIDE LOUVER AS SCHEDULED. COORDINATE FINAL FINISH, SIZE AND LOCATION WITH ARCHITECT PRIOR TO ORDERING. (TYPICAL)
10. ROUTE OUTSIDE AIR DUCT TO INTAKE CONNECTION AT FCU. ROUTE DUCT AS HIGH AS POSSIBLE. INSULATE WITH 2" DUCT WRAP. PROVIDE MANUAL VOLUME DAMPER ON OUTSIDE AIR DUCT.
11. PROVIDE SPRING-LOADED ELECTRICAL POWERED OUTSIDE AIR DAMPER WITH STEP DOWN TRANSFORMER. INTERLOCK OUTSIDE AIR DAMPER OPERATION WITH COMPRESSOR. WHEN COMPRESSOR IS ON, DAMPER SHALL OPEN AND WHEN COMPRESSOR IS OFF, DAMPER SHALL CLOSE.
12. PROVIDE OUTSIDE AIR DUCT TO LOUVER AS SHOWN. REFER TO MECHANICAL SCHEDULES FOR LOUVER REQUIREMENTS. (TYPICAL)
13. DUCTWORK ROUTING SHOWN IS DIAGRAMMATIC IN NATURE. FIELD-VERIFY STRUCTURE AND SPACE AVAILABILITY PRIOR TO SUBMITTING SHOP DRAWINGS. COORDINATE WITH ARCHITECT AND ENGINEER IN CASE OF CONFLICTS. (TYPICAL)
14. PROVIDE TEMPERATURE AND RH SENSOR. INSTALL 48" A.F.F. COORDINATE WITH ARCHITECT AND OWNER TO MEET ADA REQUIREMENTS. PROVIDE CLEAR LOCKING COVER FOR ALL THERMOSTATS AND RH SENSORS. REFER TO DDC CONTROLS SPECIFICATIONS FOR MORE INFORMATION. (TYPICAL)
15. PROVIDE 1-1/2 HOUR RATING, DYNAMIC FIRE DAMPER EQUAL TO RUSKIN DIBD2 AND DUCT ACCESS DOOR EQUAL TO RUSKIN ADH-22 FOR RECTANGULAR DUCT, ACUDOR RD FOR ROUND DUCT. PROVIDE FIRE DAMPER AT WALL PENETRATIONS AS SHOWN. (TYPICAL)
16. PROVIDE DRYWELL TO SERVE CONDENSATE FROM FAN COIL UNIT (FCU). SEE ASSOCIATED DETAIL ON DETAIL SHEET.
17. PROVIDE LINEAR DIFFUSER AS SCHEDULED. DIFFUSERS SHALL HAVE CONTINUOUS LOOK WITH LENGTH AS SHOWN FOR AESTHETICS PURPOSES. PROVIDE FIELD-FABRICATED SHEET METAL PLENUM BOX BEHIND THE ACTIVE SECTION OF AIR DEVICE. PROVIDE A PAINTED SHEET METAL COVER BEHIND THE INACTIVE SECTION OF THE AIR DEVICE TO AVOID SEEING THROUGH THE AIR DEVICE SLOTS. COORDINATE COLOR WITH ARCHITECT.
18. ROUTE TRAPPED COPPER CONDENSATE PIPING TO DRYWELL. PENETRATE EXTERIOR WALL DOWN LOW.

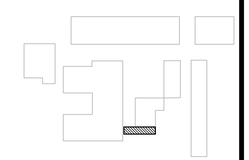

KEYPLAN

ethos engineering
119 W. VAN BUREN AVE. STE.101
HARLINGEN, TX
PHONE: 956-230-3435
TEXAS REGISTERED
ENGINEERING FIRM
F-15998

No.	REVISIONS	BY

GMS ARCHITECTS
1150 paredes line rd.
brownsville
texas 78526
(956) 546-0110
fax (956) 546-0196

SAN BENITO CISD ADDITIONS AND RENOVATIONS AT SAN BENITO HS AND SULLIVAN ELEMENTARY

SAN BENITO TEXAS

BID PACKAGE "B" SULLIVAN ELEMENTARY

STATE OF TEXAS
CESAR A. GONZALEZ
108611
LICENSED PROFESSIONAL ENGINEER
8.2.2019

COPYRIGHT 2019
GOMEZ MENDEZ SAENZ INC.
ARCHITECTS-PLANNERS

DATE	AUGUST 2, 2019
SCALE	As Shown
DRAWN	ETHOS
JOB	19V32
SHEET	BM2.01

FAN COIL UNIT SCHEDULE

MARK	TYPE	TOTAL CFM	VENT. CFM	ESP (IN.)	MIN. HP	ELECT. V/P/H	MCA	MOCP	COOLING TOTAL BTU/H	COOLING SENSIBLE BTU/H	COOLING EAT DB/WB	COOLING LAT DB/WB	AUXILIARY HEATING HEATER ELEMENTS	AUXILIARY HEATING ELEC. HEATER (KW)	WT. LBS.	NOTES	LENNOX MODEL
FCU-1	VERT.	1,500	150	0.5	1.0	208/1/60	50	50	45,500	33,525	76.76/65.35	55.7/55.1	1	9.0	186	ALL	CBA27UHE-048
FCU-2	VERT.	600	100	0.5	0.5	208/1/60	28	30	23,440	15,435	77.27/66.63	52.9/52.9	1	5.0	137	ALL	CBA27UHE-024

NOTES:

1. MANUFACTURER AND MODEL NUMBER LISTED ARE "OR APPROVED EQUAL". SEE SPECIFICATIONS FOR APPROVED MANUFACTURERS AND SUBSTITUTION PROCEDURES.
2. ESP IS STRICTLY EXTERNAL STATIC PRESSURE AND IS IN ADDITION TO ANY FILTERS, COILS OR OTHER ACCESSORIES INCLUDED WITH THE FCU.
3. PROVIDE VARIABLE SPEED DIRECT DRIVE BLOWER MOTOR. FURNISH FANS WITH NON-OVERLOADING MOTORS.
4. PROVIDE SINGLE POINT OF ELECTRICAL CONNECTION.
5. PROVIDE CABINET MODULAR 1" THICK INSULATION.
6. PROVIDE "EASY-ACCESS" FILTER RACK THAT ACCOMODATES 2" FILTERS.
7. SAFETY DISCONNECT BY DIV. 26. COORDINATE WITH ELECTRICAL CONTRACTOR.

AIR COOLED CONDENSING UNIT

MARK	FCU SERVED	TOTAL BTUH	AIR IN COND. TEMP (F)	ELECTRIC V/P/Hz	MCA	MOCP	MIN. S(EER) / IEER	STEPS OF CAPACITY	WEIGHT LBS	KEYED NOTES	LENNOX MODEL NUMBER
ACCU-1	FCU-1	45,500	100	208/1/60	29.2	40.0	16.0 (12.2)	2	235	ALL	16ACX-048
ACCU-2	FCU-2	23,440	100	208/1/60	15.6	20.0	16.0 (13.0)	2	190	ALL	16ACX-024

NOTES:

1. INSULATE REFRIGERANT LINES AS PER SPECIFICATIONS. PROVIDE ALUMINUM METAL JACKETING AROUND INSULATION FOR ALL EXTERIOR EXPOSED LINES.
2. PROVIDE LOUVER HAIL GUARD, LOW AMBIENT KIT, SIGHT GLASS, SERVICE VALVES, FILTER DRYER, SOLENOID VALVES, TXVS, ANTI-SHORT CYCLE TIMER.
3. MOUNT ON 4" CONCRETE HOUSEKEEPING PAD AND MAINTAIN MANUFACTURER'S RECOMMENDED CLEARANCES.
4. MANUFACTURER AND MODEL NUMBER LISTED ARE "OR APPROVED EQUAL". SEE SPECIFICATIONS FOR APPROVED MANUFACTURERS AND SUBSTITUTION PROCEDURES.
5. PROVIDE FREEZESTAT/DEFROST CONTROLLER TO PROTECT COMPRESSOR(S) WHEN ICE BUILD-UP IS DETECTED IN THE EVAPORATOR COIL.
6. SAFETY DISCONNECT BY DIV. 26. COORDINATE WITH ELECTRICAL CONTRACTOR.
7. PROVIDE E-COATED CONDENSER COIL PROTECTION PER SPECIFICATIONS.

AIR DEVICE & DIFFUSER SCHEDULE

SUPPLY AIR DIFFUSER (SD-1)

TITUS OMNI-AA NC < 20			DESCRIPTION: ALUMINUM SQUARE CEILING DIFFUSER, BORDER TYPE 3, COLOR WHITE WITH ROUND NECK AND FULL FACE		
CLG. MODULE SIZE INCHES	FACE SIZE INCHES	ROUND NECK SIZE	FLEX DUCT SIZE	DIFFUSER DIFFUSION PATTERN & CFM	NOTES
24 X 24	24 X 24	TO MATCH NC CRITERIA	SEE PLAN	SD1-CFM	1-5

SUPPLY AIR DIFFUSER (SD-2)

TITUS FL-25-JT NC < 17			DESCRIPTION: HIGH PERFORMANCE, LINEAR SLOT DIFFUSER. SEE PLAN FOR LENGTH.		
CFM RANGE	# SLOTS	SIZE OF SLOTS INCHES	(ACTIVE SECTION) PLENUM LENGTH INCHES	DIFFUSER DIFFUSION PATTERN & CFM	NOTES
0 - 725	1	2.5"	48" LONG (BACK CONNECTION)	SD-2	1, 4, 5, 6

RETURN AND TRANSFER AIR GRILLE (RG-1 & TG-1)

TITUS 50F NC < 20			DESCRIPTION: ALUMINUM GRID EGGCRATE RETURN GRILLE WITH BORDER TYPE 3 (LAY-IN).	
CFM RANGE	CLG. MODULE SIZE INCHES	NOMINAL DUCT SIZE INCHES (INLET)	DIFFUSER DIFFUSION PATTERN & CFM	NOTES
0 - 1600	24 X 24	18 X 18	RG1-CFM (RETURN AIR GRILLES ONLY)	1,4,5
0 - 1600	24 X 24	18 X 18	TG1-CFM (TRANSFER AIR GRILLES ONLY)	1,4,5

NOTES:

1. PROVIDE MANUFACTURER'S STANDARD BAKED WHITE ENAMEL FINISH.
2. PROVIDE FULL SIZE BACK PAN WITH DUCT ADAPTER.
3. INSULATE BACK PAN ON ALL SUPPLY AIR DIFFUSERS AND GRILLES.
4. PROVIDE MOUNTING FRAME TYPE COMPATIBLE WITH SCHEDULED CEILING OR WALL (SURFACE OR LAY-IN).
5. AIR DEVICES SHALL MATCH ARCHITECTURAL FINISH. COORDINATE COLOR WITH ARCHITECT.
6. PROVIDE BORDER TYPE 11 HIDDEN FLANGE.

LOUVER SCHEDULE

MARK	SERVES	CFM RANGE	FACE SIZE (W X H)	MIN. FREE AREA (FT2)	MANUFACTURER & MODEL NUMBER	NOTES
SL-1	SEE PLANS	150	18 X 12	0.33	RUSKIN EME520MD	ALL
SL-2	SEE PLANS	100	12 X 12	0.22	RUSKIN EME520MD	ALL

NOTES:

1. PRIOR TO ORDERING, COORDINATE LOUVER FINISH AND EXACT FACE SIZE WITH ARCHITECT.
2. PROVIDE STAINLESS STEEL BIRD SCREEN AND HARDWARE.
3. PROVIDE FACTORY APPLIED KYNAR 500 FINISH.
4. PROVIDE WITH TDI PRODUCT EVALUATION REPORT INDICATING THE METHOD OF ATTACHMENT SUITABLE FOR THE WALL SUBSTRATE. REFER TO ARCHITECTURAL DRAWINGS FOR WALL SUBSTRATE PROFILES.

ethos engineering
119 W. VAN BUREN AVE. STE.101
HARLINGEN, TX
PHONE: 956-230-3435
TEXAS REGISTERED
ENGINEERING FIRM
F-15998

No.	REVISIONS	BY

GMS ARCHITECTS
1150 paredes line rd.
brownsville
texas 78526
(956) 546-0110
fax (956) 546-0196

SAN BENITO CISD
ADDITIONS AND RENOVATIONS AT SAN BENITO HS AND SULLIVAN ELEMENTARY
SAN BENITO TEXAS

BID PACKAGE "B" SULLIVAN ELEMENTARY

STATE OF TEXAS
CESAR A. GONZALEZ
108611
LICENSED PROFESSIONAL ENGINEER
8.2.2019

COPYRIGHT 2019
GOMEZ MENDEZ SAENZ INC.
ARCHITECTS-PLANNERS

DATE	AUGUST 2, 2019
SCALE	As Shown
DRAWN	ETHOS
JOB	19V32
SHEET	BM3.01

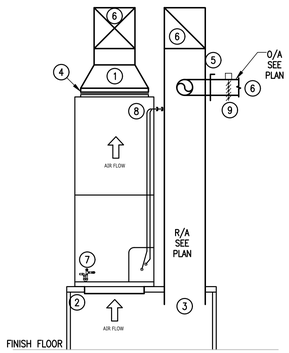

KEYED NOTES:

1. PROVIDE DUCTWORK TRANSITION.
2. PROVIDE FCU PLATFORM USING GALVANIZED STEEL ANGLE IRON WITH WELDED JOINTS. ENCLOSE PLATFORM USING 1" THICK MOISTURE RESISTANT PLYWOOD AND BOLT TO FRAMING WITH 1/4" GALVANIZED BOLTS. COORDINATE PLATFORM SIZE ON SITE. SET UNIT ON 1/2" NEOPRENE PAD ON PLATFORM. PLATFORM TO BE USED AS A RETURN AIR PLENUM AND BE SEALED AIRTIGHT.
3. TERMINATE DUCT INTO RETURN AIR PLENUM/FCU PLATFORM.
4. FLEX CONNECTOR.
5. MANUAL VOLUME DAMPER.
6. SEE PLANS FOR DUCT CONTINUATION.
7. SYMBOL IS DIAGRAMMATIC. COORDINATE CONDENSATE TRAP SIZE AND DEPTH WITH FCU SUPPLIER. PROVIDE INSULATED COPPER CONDENSATE DRAIN LINE ON UNISTRUT SLEEPERS, AND ROUTE LINE TO DRAIN RECEPTOR.
8. OPTIMIZE ROUTING OF REFRIGERANT PIPING AND COIL CONNECTIONS TO PREVENT BLOCKAGE OF UNITS ACCESS DOORS. ACCESS DOORS SHALL HAVE A CLEAR SWING FOR SERVICE.
9. SPRING-LOADED ELECTRICALLY POWERED DAMPER INTERLOCKED WITH COMPRESSOR OPERATION.

01 FCU SCHEMATIC DETAIL
SCALE: NOT TO SCALE

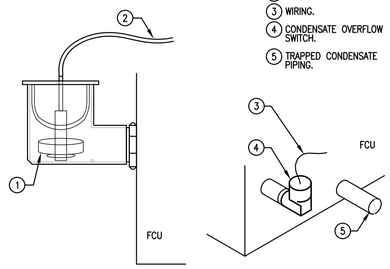

KEYED NOTES

1. FLOAT SWITCH.
2. INTERLOCK WITH FCU.
3. WIRING.
4. CONDENSATE OVERFLOW SWITCH.
5. TRAPPED CONDENSATE PIPING.

02 CONDENSATE OVERFLOW SWITCH DETAIL
SCALE: NOT TO SCALE

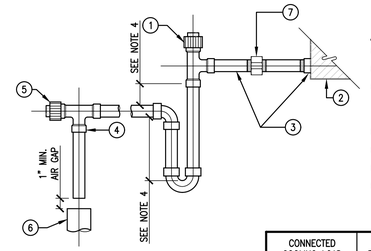

KEYED NOTES

1. CLEAN OUT.
2. DRAIN PAN.
3. DRAIN LINE SHALL BE AT LEAST OF THE SAME SIZE AS THE DRAIN PAN CONNECTION.
4. PITCH.
5. CLEAN OUT.
6. OPEN DRAIN.
7. PROVIDE THREADED UNION CONNECTION FOR ACCESS.

NOTES:

1. MANUALLY PRIME TRAP BEFORE START UP.
2. SUPPORT DRAIN LINES TO PREVENT SAG.
3. ALLOW SUFFICIENT SPACE BELOW PAN FOR TRAP AND PITCH TO DRAIN.
4. COORDINATE WITH MANUFACTURER OF AHU.

CONNECTED COOLING LOAD	MIN. * PIPE SIZE
UP TO 2 TON	3/4"
2–5	1"
5–30	1–1/4"
30–50	1–1/2"
50–160	2"
160–300	3"
300–430	4"

* NOT SMALLER THAN OUTLET SIZE.

03 FCU CONDENSATE DRAIN DETAIL
SCALE: NOT TO SCALE

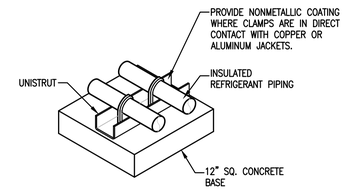

04 REFRIGERANT PIPING SUPPORT DETAIL
SCALE: NOT TO SCALE

KEYED NOTES

1. PROVIDE 1" COPPER CONDENSATE PIPING FROM EQUIP.
2. PROVIDE 36"s X 48" LENGTH OF CONCRETE PIPE TO SERVE EQUIP. CONDENSATE PIPING.
3. PROVIDE GRAVEL FILL.

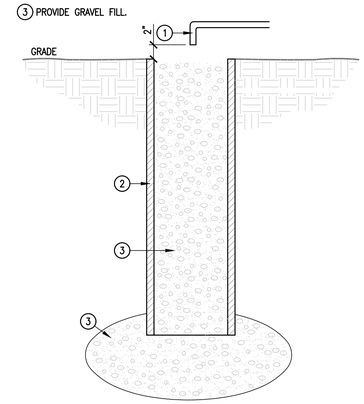

05 DRY-WELL DETAIL
SCALE: NOT TO SCALE

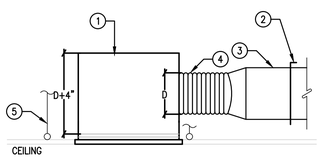

KEYED NOTES

1. SHEET METAL (PAINTED WHERE EXPOSED) PLENUM BOX. PROVIDE SUFFICIENT SUPPORT PER SMACNA REQUIREMENTS TO PLACE NO LOAD ON CEILING GRID.
2. VOLUME DAMPER AT TAKE-OFF (PREFERED LOCATION), TYP.
3. DUCT AS SHOWN ON PLANS TYP.
4. FLEX.
5. HANGER, TYP.

06 CEILNG RETURN GRILLE DETAIL
SCALE: NOT TO SCALE

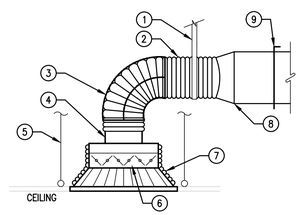

KEYED NOTES

1. STRAP HANGER.
2. FLEX SUPPLY DUCT, TYP.
3. DUCT COLLAR (TO RETAIN ELBOW SHAPE).
4. ROUND NECK ADAPTOR.
5. HANGER. TYP.
6. OPPOSED BLADE DAMPER (ALTERNATIVE), TYP.
7. INSULATION, TYP.
8. RECT. TO ROUND TRANSITION, TYP.
9. VOLUME DAMPER AT TAKE-OFF (PREFERED LOCATION), TYP.

07 CEILING DIFFUSER SUPPORT DETAIL
SCALE: NOT TO SCALE

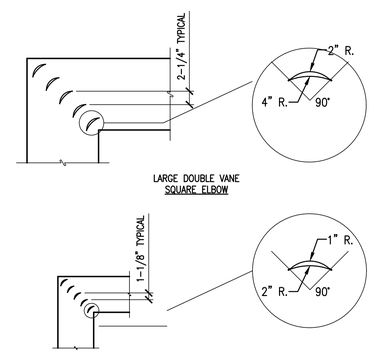

NOTE:
TOP OF DUCT NOT SHOWN FOR CLARITY

08 TYPICAL VANED DUCT ELBOWS DETAIL
SCALE: NOT TO SCALE

NOTES:

1. FIT ALL CONNECTIONS TO AVOID VISIBLE OPENINGS & SECURE SUITABLY FOR THE PRESSURE CLASS.
2. ADDITIONAL MECHANICAL FASTENERS REQ'D. FOR 4" W.G. & OVER.
3. DO NOT EXPOSE LINER EDGES ON LINED DUCT CONNECTIONS.
4. ALL OPENINGS TO BE CUT ACCURATELY IN SHAPE & SIZE.

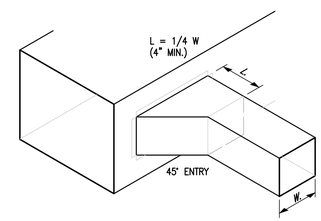

09 BRANCH CONNECTION DETAILS
SCALE: NOT TO SCALE

NOTE:
TOP OF DUCT NOT SHOWN FOR CLARITY

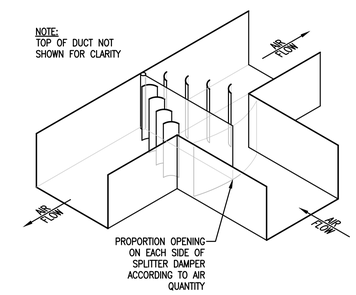

10 TYPICAL SPLITTER DAMPER DETAIL
SCALE: NOT TO SCALE

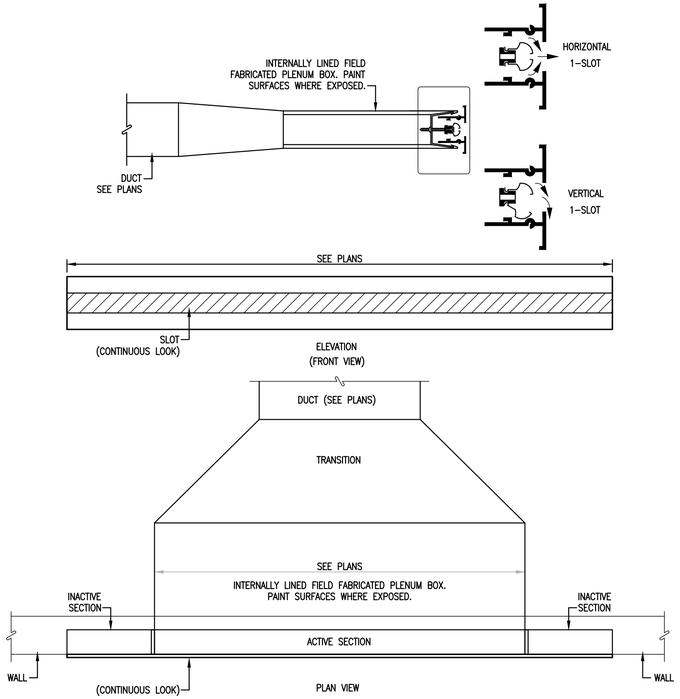

11 LINEAR DIFFUSER DETAIL
SCALE: NOT TO SCALE

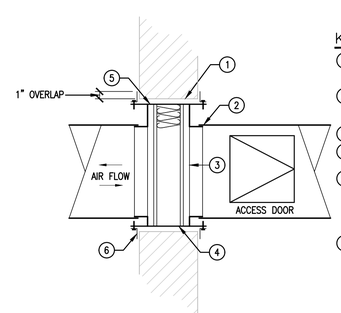

KEYED NOTES

1. PROVIDE 1/4" CLEARANCE ON SIDES AND TOP FOR DAMPER EXPANSION.
2. BREAKAWAY, SLIP TYPE DUCT CONNECTION (TYP. FOR BOTH SIDES)
3. FIRE DAMPER
4. FASTEN DAMPER FRAME TO SLEEVE
5. SLEEVE SHALL BE MIN. 18 GA. FOR FIRE DAMPERS UP TO 36"X24" AND 14 GA. FOR DAMPERS EXCEEDING 36"X24" SLEEVE SHALL TERMINATE FLUSH WITH FIRE RATED WALL.
6. MOUNTING ANGLES TO BE MIN. 1-1/2" X 1-1/2" X 14 GA. ANGLE FRAME; SHALL BE WELDED OR BOLTED TO ALL FOUR SIDES OF THE SLEEVE (DO NOT SECURE ANGLE TO WALL)

NOTES:

1. FIRE DAMPER TO BE LABELED IN ACCORDANCE WITH UL STANDARDS, AND STATE FIRE MARSHALL APPROVED.
2. INSTALLATION DETAILS SHALL MEET NFPA 90A & B REQUIREMENTS.
3. LOCATE ACCESS DOOR FOR BEST ACCESS TO LINK.
4. FUSIBLE LINK TO BE RATED FOR 50% ABOVE MAXIMUM OPERATING TEMPERATURE OF SYSTEM.
5. FOR STAINLESS STEEL FIRE DAMPER METAL GAUGE, REFER TO MANUFACTURER RECOMMENDATIONS.
6. FIRE DAMPER SHALL BE RATED FOR DYNAMIC DUTY.
7. SLEEVE SHALL TERMINATE FLUSH WITH FIRE RATED WALL.

12 FIRE DAMPER WITH ACCESS PANEL DETAIL
SCALE: NOT TO SCALE

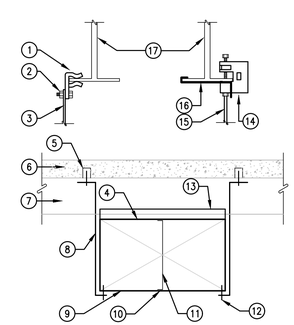

NOTE:
FOLLOW SMACNA GUIDELINES FOR DUCT SUPPORT.

KEYED NOTES

1. FRICTION CLAMP.
2. NUT & BOLT.
3. HANGER STRAP.
4. ARRANGE SEAM JOINTS TO MISS BEAMS.
5. INSERT–DO NOT INSERT INTO BOTTOM OF BEAMS OR JOISTS.
6. CEILING SLAB.
7. CONSTRUCTION BEAM.
8. 1" X 18 GA. STRAP HANGER (ONE HANGER ON DUCTS 31" AND UP).
9. DUCT WITH FLAT SEAM CONSTRUCTION (STANDARD "S" SLIP SNUG TO BEAM).
10. 3/16" SD 64BS POP RIVETS (TWO EACH AT TOP & BOTTOM OF VERTICAL STIFFENER).
11. 1-1/2" X 16 GA. STEEL BAR SUPPORT LOCATED CLOSE TO STIFFENER: DUCT WIDTH TO 24" – NOT REQUIRED DUCT WIDTH 25" TO 47" – ONE (1) REQUIRED.
12. #6 X 3/8" S/M SCREW (TYP).
13. ANGLE STIFFENER FOR DUCT WIDTH 25" TO 40": 1" STANDING "S" OR 1" X 1" X 1/2" ANGLE.
14. C–CLAMP WITH RETAINING CLIP OR WITH LOCK NUT (OPTIONAL).
15. HANGING ROD.
16. RETAINING CLIP.
17. STRUCTURAL.

13 DUCT SUPPORT DETAIL
SCALE: NOT TO SCALE

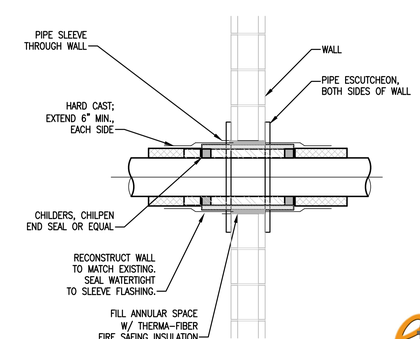

14 PIPE PENETRATION AT WALL DETAIL
SCALE: NOT TO SCALE

No.	REVISIONS	BY

GMS ARCHITECTS
1150 paredes line rd.
brownsville
texas 78526
(956) 546-0110
fax (956) 546-0196

SAN BENITO CISD
ADDITIONS AND RENOVATIONS AT SAN BENITO HS AND SULLIVAN ELEMENTARY
SAN BENITO TEXAS

BID PACKAGE "B"
SULLIVAN ELEMENTARY

STATE OF TEXAS
CESAR A. GONZALEZ
108611
LICENSED
8.2.2019

COPYRIGHT 2019
GOMEZ MENDEZ SAENZ INC.
ARCHITECTS-PLANNERS

DATE	AUGUST 2, 2019
SCALE	As Shown
DRAWN	ETHOS
JOB	19V32
SHEET	BM4.01

ethos engineering
119 W. VAN BUREN AVE. STE.101
HARLINGEN, TX
PHONE: 956-230-3435
TEXAS REGISTERED
ENGINEERING FIRM
F-15998

ABBREVIATIONS:

A	AMPS	EMS	ENERGY MANAGEMENT SYSTEM	NTS	NOT TO SCALE
ABC	ABOVE CEILING LINE	EXT.	EXTERNAL OR EXTERIOR	OA	OUTSIDE AIR
AC	ABOVE COUNTER BACKSPLASH	FACP	FIRE ALARM CONTROL PANEL	OAU	OUTSIDE AIR UNIT
ACCU	AIR COOLED CONDENSING UNIT	FCU	FAN COIL UNIT	P	POLE(S)
AHU	AIR HANDLING UNIT	FD	FIRE DAMPER	PA	PUBLIC ADDRESS
AFF	ABOVE FINISHED FLOOR	FS	FLAT SCREEN	PH	PHASE
B.	BOTTOM	G.	GROUND	RM.	ROOM
BLC.	BELOW CEILING LINE	GA.	GAGE	SS	STAINLESS STEEL
C.	CONDUIT OR COMMON	GALV.	GALVANIZED	TSTAT	THERMOSTAT
CLG.	CEILING	GRND.	GROUND	UG	UNDERGROUND
COMB.	COMBINATION	HP	HORSEPOWER	UNO	UNLESS OTHERWISE NOTED
COND.	CONDUIT	HVAC	HEATING, VENTILATION, & AIR CONDITIONING	V	VOLTS
CU.	COPPER			VAV	VARIABLE AIR VOLUME
DDC	DIRECT DIGITAL CONTROLS	INT.	INTRUSION DETECTION	VFD	VARIABLE FREQUENCY DRIVE
DISC.	DISCONNECT	MECH	MECHANICAL	WACU	WALL AIR CONDITIONING UNIT.
EDH	ELECTRIC DUCT HEATER	MS	MOTOR STARTER	W	WIRE
EF	EXHAUST FAN	MOCP	MAX. OVERCURRENT PROTECTION		

GENERAL SYMBOL LEGEND:

SYMBOL	DESCRIPTION	MNTG. HT. UNO (SEE NOTE 1)
	DISCONNECT SWITCH – NON FUSED	AS REQUIRED
	DISCONNECT SWITCH – FUSED	AS REQUIRED
	EQUIPMENT CONNECTION	AS REQUIRED
	ELECTRICAL PANELBOARD – SURFACE MOUNTED	AS REQUIRED
	ELECTRICAL PANELBOARD – RECESSED/FLUSH MOUNTED	AS REQUIRED
	UNDERGROUND RACEWAY	AS REQUIRED
	CONCEALED RACEWAY	AS REQUIRED
	CONDUIT OR EMT HOMERUN TO PANELBOARD CONCEALED IN WALLS OR ABOVE CEILING. LONG CROSSMARKS DENOTE NUMBER OF "HOT" CONDUCTORS SHORT CROSSMARKS INDICATE NEUTRALS AND DOTS INDICATE NUMBER OF GROUND CONDUCTORS. ARROW INDICATES HOME RUN TO ELECTRICAL PANEL.	AS REQUIRED

DOOR ACCESS SYSTEMS SYMBOL LEGEND:

SYMBOL	DESCRIPTION	MNTG. HT. UNO (SEE NOTE 1)
RE	DOOR REQUEST TO EXIST SENSOR – PROVIDE BACK BOX WITH 1/2" RACEWAY STUBBED TO POWER SUPPLY ABOVE ACCESSIBLE CLG.	– – – –
ML	DOOR MAGNETIC LOCK – PROVIDE BACK BOX WITH 1/2" RACEWAY STUBBED TO POWER SUPPLY ABOVE ACCESSIBLE CLG.	12" ABC
CR	DOOR PROXIMITY CARD READER – PROVIDE BACK BOX WITH 1/2" RACEWAY STUBBED TO POWER SUPPLY ABOVE ACCESSIBLE CLG.	48" AFF
RB	DOOR RELEASE BUTTON – PROVIDE BACK BOX WITH 1/2" RACEWAY STUBBED TO POWER SUPPLY ABOVE ACCESSIBLE CLG.	48" AFF
MS	AUDIO/VIDEO MASTER STATION – PROVIDE BACK BOX WITH 1/2" RACEWAY STUBBED INTO ACCESSIBLE CLG. SEE DETAIL	– – – –
DS	AUDIO/VIDEO DOOR STATION – PROVIDE BACK BOX WITH 1/2" RACEWAY STUBBED INTO ACCESSIBLE CLG. SEE DETAIL	48" AFF
CEU	CENTRAL EXCHANGE UNIT. SEE DETAIL	– – – –

NOTES:
1.) 48" AFF INDICATES TO TOP OF DEVICE;
ALL OTHER MOUNTING HEIGHTS REFER TO CENTERLINE OF DEVICE.
REFER TO DOOR ACCESS SYSTEM DETAIL.

LIGHTING SYMBOL LEGEND:

SYMBOL	DESCRIPTION	MNTG. HT. UNO (SEE NOTE 1)
	2'X4' LIGHT FIXTURE – TYPE AS NOTED	– – – –
	EMERGENCY 2'X4' LIGHT FIXTURE–TYPE AS NOTED CONNECT BATTERY PACK TO BE ON AT ALL TIMES (UNSWITCHED)	– – – –
	SURFACE/WRAPAROUND LIGHT FIXTURE	– – – –
	SURFACE/WRAPAROUND EMERGENCY LIGHT FIXTURE CONNECT BATTERY PACK TO BE ON AT ALL TIMES (UNSWITCHED)	– – – –
	SINGLE FACE EXIT SIGN CEILING OR WALL MOUNTING (DIRECTIONAL ARROWS WHERE INDICATED)	12" ABV. EGRESS OPENING
	DOUBLE FACE EXIT SIGN CEILING OR WALL MOUNTING (DIRECTIONAL ARROWS WHERE INDICATED)	12" ABV. EGRESS OPENING
	EMERGENCY LIGHTING UNIT	8'–0"AFF
	WALL MOUNT LIGHT FIXTURE – TYPE AS NOTED	– – – –
PC	OUTDOOR PHOTO CELL WALL MOUNTED	12'–0"AFF

NOTES:
1.) REFERENCE LIGHT FIXTURE SCHEDULE FOR ALL MOUNTING HEIGHTS.

LIGHTING CONTROLS SYMBOL LEGEND:

SYMBOL	DESCRIPTION	MNTG. HT. UNO (SEE NOTE 1)
S_{VS}	VACANCY WALL SENSOR SWITCH – ACUITY MODEL NO. #WSX SA IV.	48"AFF
nPODM	nPODM 1 CHANNEL ON/OFF CHANNEL	48"AFF
nPOD KEY	nPOD KEY DIGITAL KEYSWITCH ON/OFF TOGGLE	48"AFF
nPODM 2P	nPODM 2P 2 CHANNEL ON/OFF TOGGLE	48"AFF
nPODM 4P DX	nPODM 4P DX 4 CHANNEL ON/OFF TOGGLE WITH DIMMING	48"AFF
nPODM DX	nPODM DX 1 CHANNEL ON/OFF CHANNEL WITH DIMMING	48"AFF
nCM PDT 9	nCM PDT 9 STANDARD RANGE 360° SENSOR – CEILING MOUNT	CLG.
nCM PDT 10	nCM PDT 10 EXTENDED RANGE 360° SENSOR – CEILING MOUNT	CLG.
nPP16	nPP16 POWER/RELAY PACK: 16A 120/270 VAC	ABV. CLG.
nPP16 DS	nPP16 DS POWER/RELAY PACK: 16A 120/270 VACC W/ 0–10VDC DIMMING VIA SIDE SLOT	ABV. CLG.
nWV PDT 16	nWV PDT 16 CORNER MOUNT 120° CORNER MOUNT SENSOR	10' AFF
PC	DIGITAL OUTDOOR PHOTO CELL WALL MOUNTED – LC&D SEE DETAIL	12' AFF

NOTES:
1.) 48" AFF INDICATES TO TOP OF DEVICE;
ALL OTHER MOUNTING HEIGHTS REFER TO CENTERLINE OF DEVICE.

WIRING DEVICES SYMBOL LEGEND:

SYMBOL	DESCRIPTION	MNTG. HT. UNO (SEE NOTE 1)
	DUPLEX TAMPER RESISTANT RECEPTACLE – HUBBELL MODEL #BR20XTR	18"AFF
FS	DUPLEX RECEPTACLE FOR FLAT SCREEN – HUBBELL MODEL #CR5352X	84"AFF
GFCI WICP	DUPLEX RECEPTACLE TAMPER RESISTANT W/ GROUND FAULT INTERRUPTING TYPE – HUBBELL MODEL #GFTWRST20X AND WHILE IN USE WEATHERPROOF COVER – HUBBELL MODEL #WP26EH	18"AFF
AC	DUPLEX RECEPTACLE TAMPER RESISTANT – HUBBELL MODEL #8300XTR MOUNT @ +4" HORIZONTALLY ABOVE COUNTER BACKSPLASH (U.N.O.)	4"ACB
	JUNCTION BOX W/ BLANK STAINLESS STEEL COVERPLATE	AS REQUIRED
WB	DUPLEX RECEPTACLE FOR WHITE BOARD PROJECTOR – HUBBELL MODEL #CR5352X	AS REQUIRED

NOTES:
1.) 48" AFF INDICATES TO TOP OF DEVICE;
18" AFF INDICATES TO TOP OF DEVICE;
ALL OTHER MOUNTING HEIGHTS REFER TO CENTERLINE OF DEVICE.
AC INDICATES 4" ABOVE COUNTER TO BOTTOM OF DEVICE.
U.N.O. INDICATES UNLESS NOTED OTHERWISE.

FLOOR BOX SYMBOL LEGEND:

SYMBOL	DESCRIPTION	MNTG. HT. UNO (SEE NOTE 1)
	FLOOR BOX W/ COVER PLATES FOR WIRING DEVICES AS INDICATED. PROVIDE SPECIAL SYSTEMS RACEWAYS: 1–1.5" (DATA), 1–1.5" (A/V). PROVIDE BLANK COVERS FOR UNUSED COMPARTMENTS – HUBBELL MODEL #CFB4G30/24GCCVRBRSC.	FLOOR

NOTES:
1.) TOP OF FLOOR BOX TO BE FLUSH WITH FINISHED FLOOR. SEE ARCHITECTURAL DRAWINGS FOR FLOOR TYPES.

FIRE ALARM SYMBOL LEGEND:

SYMBOL	DESCRIPTION	MNTG. HT. UNO (SEE NOTE 1)
PS	FIRE ALARM MANUAL PULLSTATION – PROVIDE BACKBOX WITH 1/2"C AND PULLWIRE.	48"AFF
AV AV	FIRE ALARM STROBE HORN CEILING OR WALL MOUNTED – PROVIDE 15/75 CANDELA U.N.O. – PROVIDE BACKBOX WITH 1/2"C AND PULLWIRE.	80"AFF
SS SS WG	FIRE ALARM SPEAKER STROBE CEILING OR WALL MOUNTED – PROVIDE BACKBOX WITH 1/2"C AND PULLWIRE. PROVIDE WIREGUARD "WG" WHERE DESIGNATED.	80"AFF
V V	FIRE ALARM STROBE LIGHT CEILING OR WALL MOUNTED – PROVIDE BACKBOX WITH 1/2"C AND PULLWIRE.	80"AFF
SD SD	FIRE ALARM SMOKE DETECTOR CEILING OR WALL MOUNTED – PROVIDE BACKBOX WITH 1/2"C AND PULLWIRE.	CLG.
	FIRE ALARM CONTROL/VOICE EVACUATION PANEL (FLUSH MOUNTED)	– – – –
	FIRE ALARM ANNUNCIATOR PANEL (SURFACE MOUNTED)	– – – –

NOTES:
1.) 48" AFF INDICATES TO TOP OF DEVICE;
ALL OTHER MOUNTING HEIGHTS REFER TO CENTERLINE OF DEVICE.

SPECIAL SYSTEMS SYMBOL LEGEND:

SYMBOL	DESCRIPTION	MNTG. HT. UNO (SEE NOTE 1)
FS	3–GANG FLAT SCREEN OUTLET – PROVIDE LARGE CAPACITY WALL BOX HUBBEL MODEL NO. HBL263 WITH 1.5" RACEWAY STUBBED INTO ACCESSIBLE CLG., PULL WIRE, MUD RING AND HBL981 LOW VOLTAGE DIVIDER.	72"AFF
AV	MULTIMEDIA OUTLET – PROVIDE 2–GANG MUD RING SECURED TO METAL STUDS WITH METAL STRAP WITH 1.5" RACEWAY STUBBED INTO ACCESSIBLE CLG. W/ PULL WIRE AND MUD RING – SEE DETAIL.	18"AFF
	DATA OUTLET/VOICE OVER IP – PROVIDE BACK BOX WITH 1" RACEWAY STUBBED INTO ACCESSIBLE CLG. WITH PULL WIRE – SEE DETAIL.	18"AFF
WAP	WIRELESS ACCESS POINT – PROVIDE BACK BOX WITH 1" RACEWAY STUBBED INTO ACCESSIBLE CLG. WITH PULL WIRE – SEE DETAIL.	CLG.

NOTES:
1.) 48" AFF INDICATES TO TOP OF DEVICE;
ALL OTHER MOUNTING HEIGHTS REFER TO CENTERLINE OF DEVICE.

BUILDING ACCESS/INTRUSION DETECTION SYMBOL LEGEND:

SYMBOL	DESCRIPTION	MNTG. HT. UNO (SEE NOTE 1)
MS	INTRUSION DETECTION MOTION DETECTOR FULL COVERAGE TYPE – PROVIDE BACKBOX WITH 1/2"C AND PULLWIRE.	9'–0"AFF
MS H	INTRUSION DETECTION MOTION DETECTOR HALLWAY COVERAGE TYPE – PROVIDE BACKBOX WITH 1/2"C AND PULLWIRE.	9'–0"AFF
GB	INTRUSION DETECTION GLASS BREAK SENSOR	ABV. CLG.
KP	INTRUSION DETECTION KEYPAD PROVIDE WITH STI COVER – PROVIDE BACKBOX WITH 1/2"C AND PULLWIRE.	48"AFF
DC	INTRUSION DETECTION DOOR MAGNETIC CONTACT – PROVIDE WITH 1/2"C AND PULLWIRE.	– – – –
S	INTRUSION DETECTION INDOOR SIREN – PROVIDE BACKBOX WITH 1/2"C AND PULLWIRE.	80"AFF
S WP	INTRUSION DETECTION OUTDOOR SIREN – PROVIDE BACKBOX WITH 1/2"C AND PULLWIRE.	10'–0" AFF

NOTES:
1.) 48" AFF INDICATES TO TOP OF DEVICE;
ALL OTHER MOUNTING HEIGHTS REFER TO CENTERLINE OF DEVICE.

INTERCOM SYSTEMS SYMBOL LEGEND:

SYMBOL	DESCRIPTION	MNTG. HT. UNO (SEE NOTE 1)
S	INTERCOM OUTDOOR HORN WEATHER PROOF – PROVIDE BACKBOX WITH 1/2"C AND PULLWIRE.	9'–6"AFF
IC	INTERCOM BUTTON – PROVIDE BACKBOX WITH 1/2"C AND PULLWIRE .	48"AFF
S	INTERCOM SPEAKER CEILING MOUNT	CLG.
H	INTERCOM ADMINISTRATION CONTROL STATION HANDSET – PROVIDE BACKBOX WITH 1"C AND PULLWIRE STUBBED INTO ACCESSIBLE CLG.	18"AFF

NOTES:
1.) 48" AFF INDICATES TO TOP OF DEVICE;
ALL OTHER MOUNTING HEIGHTS REFER TO CENTERLINE OF DEVICE.

ethos engineering
119 W. VAN BUREN AVE. STE.101
HARLINGEN, TX
PHONE: 956-230-3435
TEXAS REGISTERED
ENGINEERING FIRM
F-15998

No.	REVISIONS	BY

GMS ARCHITECTS
1150 paredes line rd.
brownsville
texas 78526
(956) 546-0110
fax (956) 546-0196

SAN BENITO CISD
ADDITIONS AND RENOVATIONS AT SAN BENITO HS AND SULLIVAN ELEMENTARY
SAN BENITO TEXAS

BID PACKAGE "B"
SULLIVAN ELEMENTARY

STATE OF TEXAS
RAY PEYNADO
125390
LICENSED ARCHITECT
8.2.2019

COPYRIGHT 2019
GOMEZ MENDEZ SAENZ INC.
ARCHITECTS-PLANNERS

DATE	AUGUST 2, 2019
SCALE	As Shown
DRAWN	ETHOS
JOB	19V32
SHEET	BE1.01

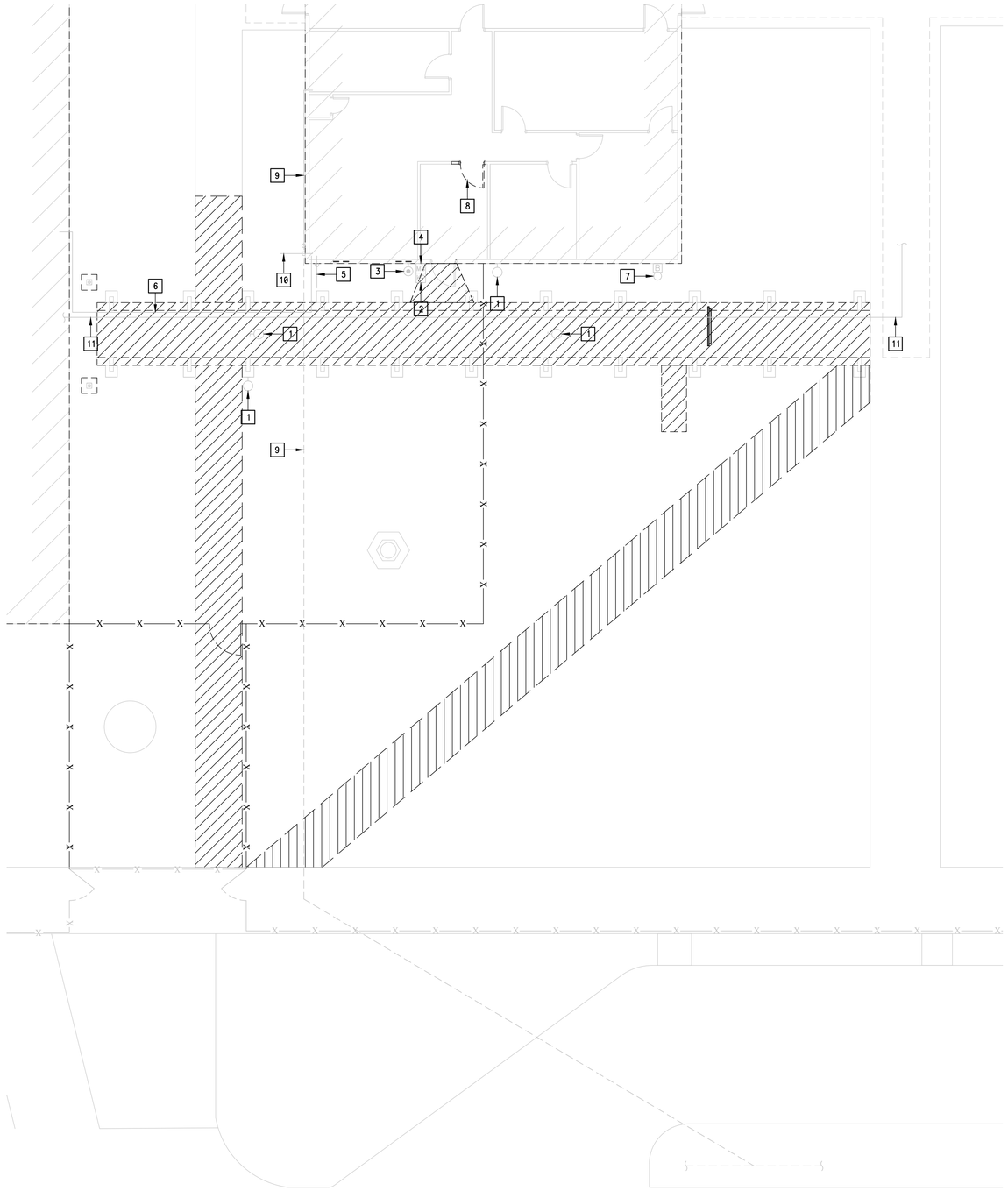

01 ELECTRICAL DEMOLITION PLAN

SCALE: 1/8" = 1'- 0"

NORTH

GENERAL NOTES:

1. REMOVED MATERIALS SHALL BELONG TO OWNER. DELIVER THEM TO OWNERS DESIGNATED LOCATION. IF OWNER DOES NOT WANT THE REMOVED MATERIALS THEN REMOVE THEM FROM SITE & PROPERLY DISPOSE OF THEM.
2. CONTRACTOR SHALL REMOVE & DISPOSE OF ALL EXISTING ELECTRICAL EQUIPMENT, CONDUIT & WIRING IN AREAS WHERE WORK IS TO TAKE PLACE, EVEN IF NOT SPECIFICALLY INDICATED IN THIS DRAWING, UNLESS NOTED OTHERWISE IN DRAWINGS.
3. REFER TO ARCHITECTURAL DEMOLITION DRAWINGS FOR WALLS AND CEILINGS TO BE REMOVED.
4. IF REMOVAL OF EXISTING ELECTRICAL SYSTEMS RENDERS EXISTING ELECTRICAL SYSTEMS DOWNSTREAM TO REMAIN INOPERABLE, PROVIDE J-BOXES, CONDUIT WIRING AND SPLICES ABOVE ACCESSIBLE CEILINGS IN ORDER TO CONTINUE OPERATION.
5. REFER TO ARCHITECTURAL SPECIFICATIONS FOR PHASING REQUIREMENTS.
6. CONTRACTOR TO COOPERATE WITH OWNER DURING CONSTRUCTION OPERATION TO MINIMIZE CONFLICTS AND FACILITATE OWNER USAGE. PERFORM THE WORK SO AS NOT TO INTERFERE WITH OWNERS OPERATIONS.
7. CONTRACTOR SHALL PROVIDE AN INVENTORY OF ALL EXISTING LIGHTING PRIOR TO REMOVAL. CONTRACTOR SHALL NOTE BY ROOM THE LIGHT FIXTURE TYPE & QUANTITY, LAMP TYPE AND QUANTITY PER FIXTURE. SUBMIT INVENTORY TO ENGINEER.
8. ITEMS DESIGNATED WITH AN "EX" ARE EXISTING TO REMAIN AS IS.

KEYED NOTES:

1. DISCONNECT AND REMOVE EXISTING LIGHT FIXTURE ALONG WITH RELATED CONDUIT WIRE AND SUPPORT HARDWARE.
2. DISCONNECT AND REMOVE EXISTING DOOR ACCESS KEY PAD ALONG WITH RELATED WIRE AND SUPPORT HARDWARE.
3. DISCONNECT AND REMOVE EXISTING DOOR BELL ALONG WITH RELATED WIRE AND SUPPORT HARDWARE.
4. DISCONNECT AND REMOVE EXISTING VIDEO/INTERCOM STATION ALONG WITH RELATED WIRE AND SUPPORT HARDWARE.
5. DISCONNECT AND REMOVE EXISTING SPARE CONDUIT AND SUPPORT HARDWARE. PATCH AND REPAIR EXISTING PENETRATION.
6. DISCONNECT AND REMOVE EXISTING INTERCOM AND TELEPHONE CABLING ALONG WITH RELATED CONDUIT AND SUPPORT HARDWARE. INTERCOM CABLING TO BE REROUTED BACK TO EXISTING HEAD END EQUIPMENT. REFER TO SHEET BE2.01 FOR WORK TO BE DONE UNDER ALLOWANCE. PATCH AND REPAIR EXISTING PENETRATION.
7. DISCONNECT AND REMOVE EXISTING BELL ALONG WITH RELATED WIRE AND SUPPORT HARDWARE.
8. DISCONNECT AND REMOVE ANY AND ALL EXISTING WIRING AND SPECIAL SYSTEMS DEVICES LOCATED ON EXISTING WALL TO BE REMOVED ALONG WITH RELATED RACEWAY, WIRE AND SUPPORT HARDWARE.
9. EXISTING FIBER OPTIC CABLE SERVICE ENTRANCE. UNEARTH AND REMOVE EXISTING RACEWAY. PROVIDE A 4" UNDERGROUND RACEWAY ALONG THE SAME PATH TO BE 36" BELOW NEW BUILDING FOUNDATION. COORDINATE WORK WITH AT&T.
10. DISCONNECT, REMOVE AND RE-ROUTE EXISTING POWER ALONG WITH RELATED WIRE AND SUPPORT HARDWARE.
11. DISCONNECT AND REMOVE EXISTING TV COAX CABLE. CABLE TO BE RE-ROUTED.

KEYPLAN

ethos engineering
119 W. VAN BUREN AVE. STE.101
HARLINGEN, TX
PHONE: 956-230-3435
TEXAS REGISTERED
ENGINEERING FIRM
F-15998

No.	REVISIONS	BY

GMS ARCHITECTS
1150 paredes line rd.
brownsville
texas 78526
(956) 546-0110
fax (956) 546-0196

SAN BENITO CISD
ADDITIONS AND RENOVATIONS AT SAN BENITO HS AND SULLIVAN ELEMENTARY
SAN BENITO TEXAS

BID PACKAGE "B"
SULLIVAN ELEMENTARY

STATE OF TEXAS
RAY PEYNADO
125390
LICENSED
PROFESSIONAL ENGINEER

8.2.2019

COPYRIGHT 2019
GOMEZ MENDEZ SAENZ INC.
ARCHITECTS-PLANNERS

DATE	AUGUST 2, 2019
SCALE	As Shown
DRAWN	ETHOS
JOB	19V32
SHEET	BE2.01

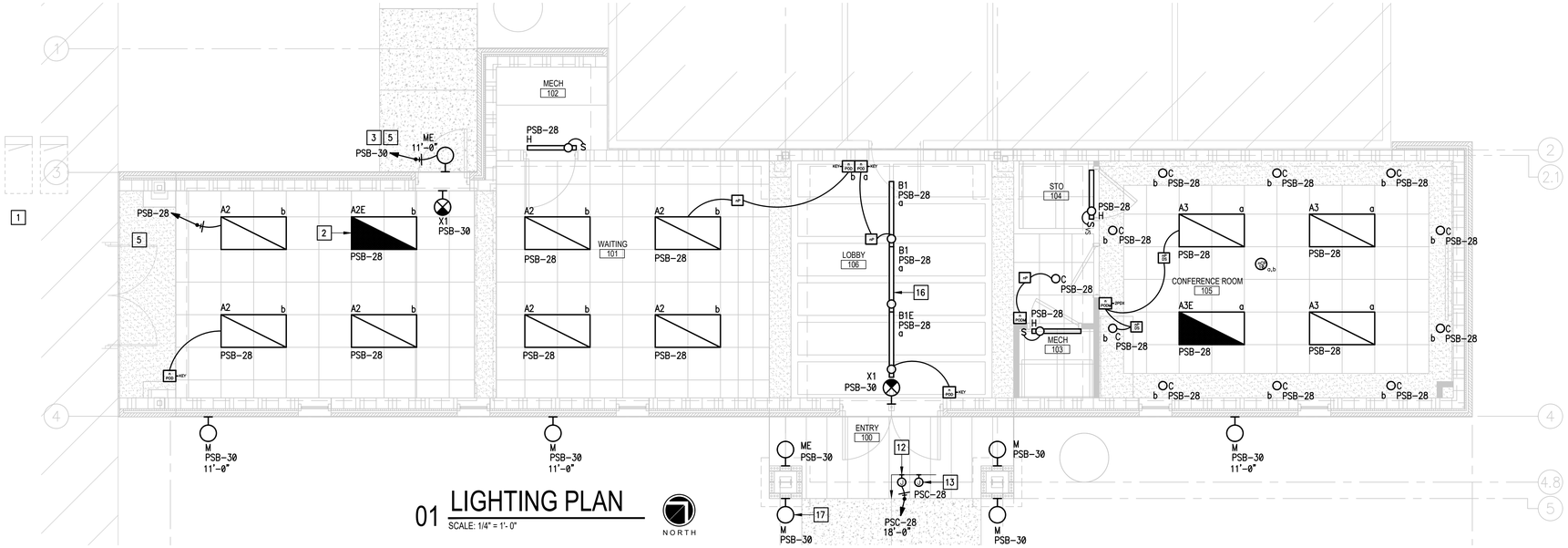

01 LIGHTING PLAN

SCALE: 1/4" = 1'- 0"

NORTH

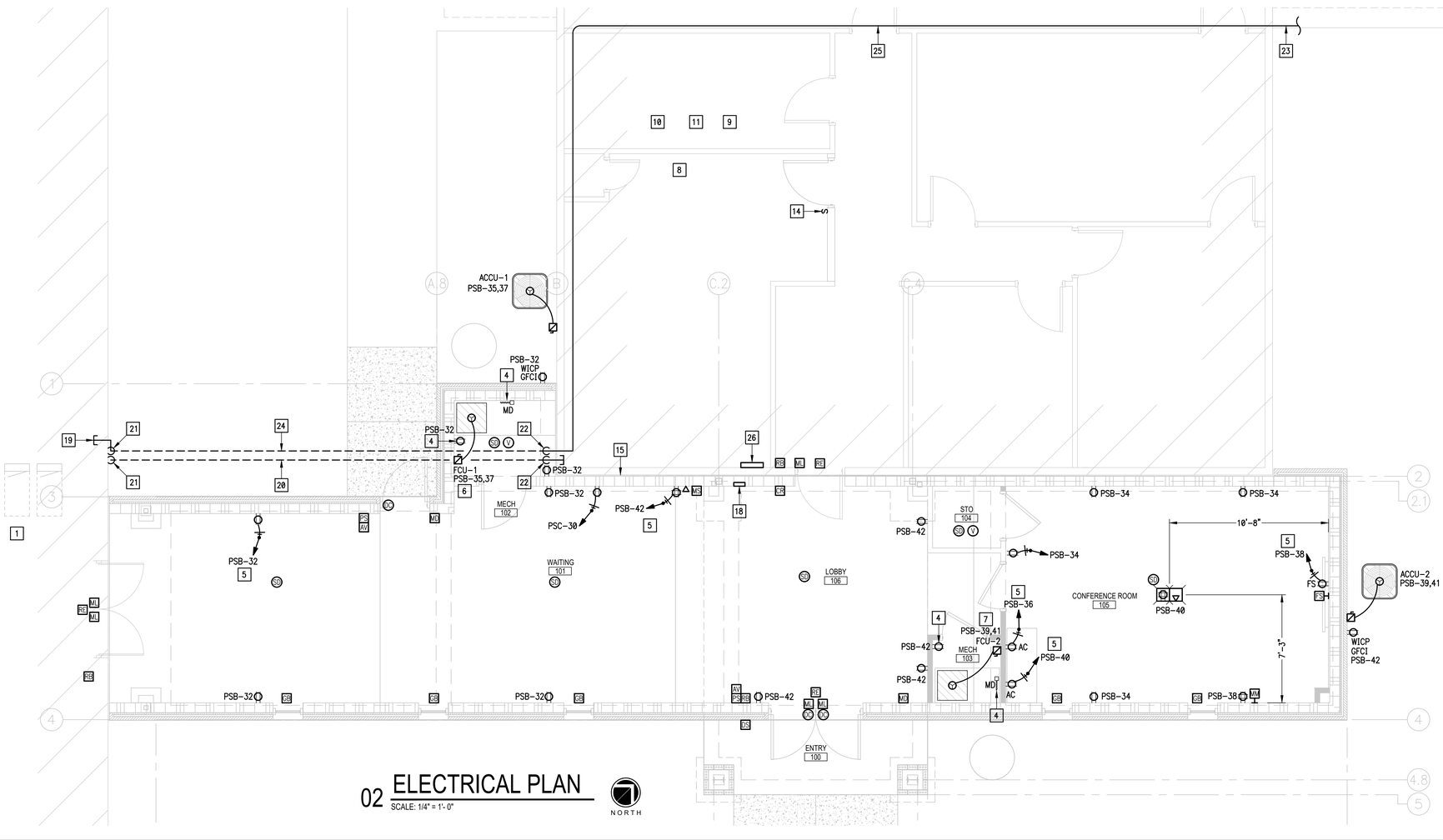

02 ELECTRICAL PLAN

SCALE: 1/4" = 1'- 0"

NORTH

GENERAL NOTES:

1. ELECTRICAL BRANCH CIRCUIT HOMERUNS SHALL BE 3/4" – 2#12 & #12G. 20A/120V HOMERUNS EXCEEDING 100FT, THE WIRE SIZE SHALL BE #10 & #8 FOR 175'.
2. HOMERUNS – INSTALL NO MORE THAN THREE PER RACEWAY (INCLUDING LIGHTING BRANCH CIRCUITS); 3 INSULATED "HOT", 3 INSULATED "NEUTRAL AND 1 SHARED "GROUND".
3. PROVIDE ALL ELECTRICAL RECEPTACLES INSTALLED WITH THE GROUND OPENING IN THE "UP" POSITION.
4. PROVIDE J–HOOKS TO SUPPORT THE FIRE ALARM, INTRUSION DETECTION, VOICE, INTERCOM AND DATA CABLING.
5. PROVIDE FIRE STOPPING AT ALL FIRE WALL PENETRATIONS; PROVIDE EXPANSION PLATES & BONDING JUMPERS AT BUILDING EXPANSION JOINTS.
6. USE TAMPER RESISTANT RECEPTACLES THROUGHOUT.
7. EACH 20A/1P BRANCH CIRCUIT SHALL HAVE A DEDICATED NEUTRAL.
8. INTERIOR LIGHTING CONTROLS SHALL BE BY VACANCY SENSORS.
9. EXTERIOR LIGHTING CONTROLS SHALL BE BY PHOTO CELL.
10. PROVIDE 0–10V SIGNAL WIRING TO EACH DIMMED LIGHT FIXTURE DRIVER AND WALL SWITCH.

KEYED NOTES:

1. APPROXIMATE LOCATION OF EXISTING 120/208V, SIEMENS ITE PANELBOARD. NO DUCTWORK OR PIPING TO BE ROUTED ABOVE PANELBOARDS. COORDINATE WITH OTHER TRADES.
2. CONNECT EMERGENCY BATTERY PACK TO BE CHARGING AT ALL TIMES (UNSWITCHED). LIGHT FIXTURE SHALL BE OPERATED BY THE CORRESPONDING SWITCH – TYPICAL.
3. SWITCH VIA PHOTO CELL.
4. CONNECT MOTORIZED DAMPER (LABELED "MD") STEP–DOWN TRANSFORMER TO NEAREST 120V NON–GFCI CIRCUIT. BRANCH CIRCUIT: 1/2" – 2#12 & #12G. BYPASS DAMPER TO BE CONNECTED BY HVAC CONTROLS CONTRACTOR – TYPICAL.
5. CONNECT TO EXISTING PANELBOARD. PROVIDE A 20A/1P BREAKER.
6. CONNECT TO EXISTING PANELBOARD. PROVIDE A 50A/2P BREAKER.
7. CONNECT TO EXISTING PANELBOARD. PROVIDE A 30A/2P BREAKER.
8. APPROXIMATE LOCATION OF EXISTING NOTIFIER AFP–200 FIRE ALARM CONTROL PANEL.
9. APPROXIMATE LOCATION OF EXISTING DMP INTRUSION DETECTION PANEL.
10. APPROXIMATE LOCATION OF EXISTING BOGEN MULTICOM–2000 INTERCOM CONSOLE. PROVIDE AN ALLOWANCE OF $7,000 FOR PULLING EXISTING CABLE, RE–ROUTING/EXTENDING AND TERMINATING CABLES.
11. APPROXIMATE LOCATION OF EXISTING MDF ROOM.
12. CONNECT LOGO SIGN POWER SUPPLIES. COORDINATE EXACT LOCATION WITH SIGN CONTRACTOR.
13. CONNECT BACK LIGHTED LETTERS. COORDINATE EXACT LOCATION WITH SIGN CONTRACTOR.
14. PROVIDE NEW LIGHT SWITCH TO CONTROL EXISTING LIGHT FIXTURES MODIFY EXISTING WIRING AS NECESSARY.
15. PROVIDE 2–2.5" RACEWAY SLEEVES ABOVE ACCESSIBLE CEILING FOR SPECIAL SYSTEMS CABLING.
16. SUSPEND LIGHT FIXTURE TYPE 'B1' BOTTOM TO ALIGN WITH CEILING CLOUD AT ITS HIGHEST POINT – TYPICAL.
17. MOUNT LIGHT FIXTURE TYPE "M" AND "ME" AT 8'–0" AFF TO CENTER OF FIXTURE (U.N.O.).
18. PROVIDE FIRE ALARM REMOTE ANNUNCIATOR FLUSH MOUNTED FACING LOBBY.
19. RE–USE EXISTING PENETRATIONS ABOVE ACCESSIBLE CEILING FOR NEW RACEWAYS.
20. PROVIDE 2–2" RACEWAYS WITH PULLWIRE (INTERCOM). RE–ROUTE EXISTING CABLING.
21. RISE UP RACEWAYS ALONG WALL.
22. PENETRATE EXISTING BUILDING AT AN ACCESSIBLE LOCATION ABOVE THE CEILING.
23. PROVIDE TV COAX CABLING. PROVIDE SPLITTERS, CONNECTORS AND SUPPORTS FOR ROUTING ALONG UNDERSIDE OF EXISTING CANOPY FOR CONTINUATION OF EXISTING SERVICE.
24. PROVIDE 1–2" RACEWAY WITH PULLWIRE (TV COAX).
25. PROVIDE TV COAX CABLING ABOVE ACCESSIBLE CEILING SPACE.
26. PROVIDE ACCESS CONTROL PANEL ABOVE CEILING. SEE DETAIL 05/BE4.01. CONNECT TO NEAREST 120V NON–GFCI CIRCUIT.

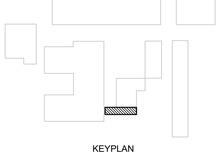

KEYPLAN

ethos engineering
119 W. VAN BUREN AVE. STE.101
HARLINGEN, TX
PHONE: 956-230-3435
TEXAS REGISTERED
ENGINEERING FIRM
F-15998

No.	REVISIONS	BY

GMS ARCHITECTS
1150 paredes line rd.
brownsville
texas 78526
(956) 546-0110
fax (956) 546-0196

SAN BENITO CISD ADDITIONS AND RENOVATIONS AT SAN BENITO HS AND SULLIVAN ELEMENTARY

SAN BENITO TEXAS

BID PACKAGE "B" SULLIVAN ELEMENTARY

STATE OF TEXAS
RAY PEYNADO
125390
LICENSED PROFESSIONAL ENGINEER
8.2.2019

COPYRIGHT 2019
GOMEZ MENDEZ SAENZ INC.
ARCHITECTS-PLANNERS

DATE	AUGUST 2, 2019
SCALE	As Shown
DRAWN	ETHOS
JOB	19V32
SHEET	BE2.02

01 TYPE A2,A2E, A3, A3E

SCALE : NOT TO SCALE

02 TYPE B1 & B1E

SCALE : NOT TO SCALE

03 TYPE C

SCALE : NOT TO SCALE

04 TYPE H

SCALE : NOT TO SCALE

05 TYPE M, ME

SCALE : NOT TO SCALE

06 TYPE X1

SCALE : NOT TO SCALE

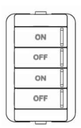

07 WALLSTATION SWITCH
nPODM 2P

SCALE : NOT TO SCALE

08 WALLSTATION SWITCH
nPODM DX 2P or 4P

SCALE : NOT TO SCALE

09 WALLSTATION SWITCH
nPODM

SCALE : NOT TO SCALE

10 WALLSTATION SWITCH
nPOD KEY

SCALE : NOT TO SCALE

11 CEILING SENSOR
nCM PDT 9, nCM PDT 10

SCALE : NOT TO SCALE

12 POWER PACK
nPP16, nPP16 DS

SCALE : NOT TO SCALE

LUMINAIRE SCHEDULE

CALLOUT	LAMP	DESCRIPTION	DRIVER	MOUNTING	MODEL	INPUT WATTS	VOLTS	NOTE	LUMENS	LUMEN MAINT.	LM HOURS
A2	LED	2'X4' LAY-IN INDIRECT TROFFER	0-10V	RECESSED	LITHONIA: 2BLT4 40L EZ1 LP840 WILLIAMS: LT24 L40 AF DIM UNV	34	120V 1P 2W		4032	L80	60,000
A2E	LED	2'X4' LAY-IN INDIRECT TROFFER	0-10V	RECESSED	LITHONIA: 2BLT4 40L EZ1 LP840 EL14L WILLIAMS: LT24 L40 AF DIM UNV EM/10W	34	120V 1P 2W	PROVIDE WITH AN EMERGENCY BATTERY PACK.	4032	L80	60,000
A3	LED	2'X4' LAY-IN INDIRECT TROFFER	0-10V	RECESSED	LITHONIA: 2BLT4 48L EZ1 LP840 WILLIAMS: LT24 L52 AF DIM UNV	45	120V 1P 2W		5234	L80	60,000
A3E	LED	2'X4' LAY-IN INDIRECT TROFFER	0-10V	RECESSED	LITHONIA: 2BLT4 48L EZ1 LP840 EL14L WILLIAMS: LT24 L52 AF DIM UNV EM/10W	45	120V 1P 2W	PROVIDE WITH AN EMERGENCY BATTERY PACK.	5234	L80	60,000
B1	LED	SUSPENDED LINEAR	0-10V	PENDANT	FINELITE: HP-4 D-4'-H-840-F-277V-FA-FE-SC-C4 FORUM: SAD 44 65 40 SAT C 4 UNV WH DIM	28	120V 1P 2W	PROVIDE A 10 YEAR WARRANTY.	2882	L70	200,000
B1E	LED	SUSPENDED LINEAR	0-10V	PENDANT	FINELITE: HP-4 D-4'-H-840-F-277V-FA-FE-SC-C4-EM FORUM: SAD 44 65 40 SAT C 4 UNV WH DIM EMLED	28	120V 1P 2W	PROVIDE A 10 YEAR WARRANTY AND WITH AN EMERGENCY BATTERY PACK .	2882	L70	200,000
C	LED	6" DOWN LIGHT	0-10V	CEILING	LITHONIA: WF6 LL LED 40K MW VERBATIM: D6-L820-C40-JB	13	120V 1P 2W		850	LM70	36,000
H	LED	3' STRIP LIGHT	0-10V	SURFACE	LITHONIA: CLX L36 SEF _ RDL _ MVOLT GZ10 40K CRI HE WILLIAMS: 75R-3-L40-8-40-DIM-UNV	28	120V 1P 2W		3750	L70	50,000
M	LED	WALLPACK	0-10V	SURFACE	LITHONIA: WSR LED 1 10A700/40K SR4 MVOLT X RAYON: T650LED DL 30 UN112 40 T4 X	22	120V 1P 2W	PROVIDE UL LISTED FOR WET LOCATIONS.	2655	L90	100,000
ME	LED	WALLPACK	0-10V	SURFACE	LITHONIA: WSR LED 1 10A700/40K SR4 MVOLT ELCW X RAYON: T650LED DL 30 UN112 40 T4 X EM	22	120V 1P 2W	PROVIDE UL LISTED FOR WET LOCATIONS AND WITH AN EMERGENCY BATTERY PACK. STANDARD COLOR FINISH TO BE SELECTED AT A LATER DATE.	2655	L90	100,000
X1	LED	SINGLE SIDED EXIT SIGN		WALL/CEILING	BEGHELLI: FTZ-SA-LR1-UWW MULE LIGHTING: WLCX-1-R-W-U-SD	3	120V 1P 2W	PROVIDE WITH A UNIVERSAL MOUNTING CANOPY, LIGHT EMITTING DIODES, & A NI-CAD BATTERY PACK.	0		

GENERAL NOTES:
1. OTHER LIGHT FIXTURE MANUFACTURERS THAN THOSE LISTED ON THIS SCHEDULE ARE REQUIRED TO OBTAIN PRIOR APPROVAL BY SUBMITTING CUT SHEETS OF THEIR SUBSTITUTIONS AT LEAST (10) DAYS PRIOR TO BID. CUT SHEETS SHALL INDICATE/HIGHLIGHT PHOTOMETRIC CURVE, EFFICIENCY & CONSTRUCTION FOR DIRECT COMPARISON.
2. EXTRA MATERIALS: SEE SPECIFCATIONS.
3. EMERGENCY BATTERY PACKS SHALL BE COMPLETE FACTORY INSTALLED WITH NI-CAD BATTERY, CHARGER INDICATING LIGHT, ELECTRONIC CIRCUITRY, 1400 LUMENS OUTPUT, 90 MINUTES DURATION & FIVE FULL YEARS WARRANTY.
4. FURNISH ALL 2' X 4' AND 2' X 2' LAY-IN LIGHT FIXTURES WITH INTEGRAL CEILING CLIPS.

EQUIPMENT CONNECTION SCHEDULE:

DESIGNATION	HP/KW	FLA	MCA	MOCP	VOLTAGE	DISCONNECT	BRANCH CIRCUIT
FCU-1	1 HP	-	50	50	208V/1PHASE	60A, 2P2F, 50AF, 240V, NEMA 1.	3/4" - 2#8 & #10G
ACCU-1	-	-	29.2	40	208V/1PHASE	60A, 2P2F, 40AF, 240V, NEMA 3R.	3/4" - 2#8 & #10G
FCU-2	.5 HP	-	28	30	208V/1PHASE	30A, 2P2F, 30AF, 240V, NEMA 1.	3/4" - 2#10 & #10G
ACCU-2	-	-	15.0	20	208V/1PHASE	30A, 2P2F, 20AF, 240V, NEMA 3R.	3/4" - 2#10 & #10G

NOTE: LOCATE EQUIPMENT MEANS OF DISCONNECT WITHIN EQUIPMENT SIGHT. DO NOT INSTALL ON EQUIPMENT, BELOW DUCTWORK OR PLUMBING LINES.

ethos engineering
119 W. VAN BUREN AVE. STE.101
HARLINGEN, TX
PHONE: 956-230-3435
TEXAS REGISTERED
ENGINEERING FIRM
F-15988

No.	REVISIONS	BY

GMS ARCHITECTS
1150 paredes line rd.
brownsville
texas 78526
(956) 546-0110
fax (956) 546-0196

SAN BENITO CISD
ADDITIONS AND RENOVATIONS AT SAN BENITO HS AND SULLIVAN ELEMENTARY
SAN BENITO TEXAS

BID PACKAGE
"B"
SULLIVAN
ELEMENTARY

STATE OF TEXAS
RAY PEYNADO
125390
PROFESSIONAL ENGINEER

8.2.2019

COPYRIGHT 2019
GOMEZ MENDEZ SAENZ INC.
ARCHITECTS-PLANNERS

DATE	AUGUST 2, 2019
SCALE	As Shown
DRAWN	ETHOS
JOB	19V32
SHEET	BE3.01

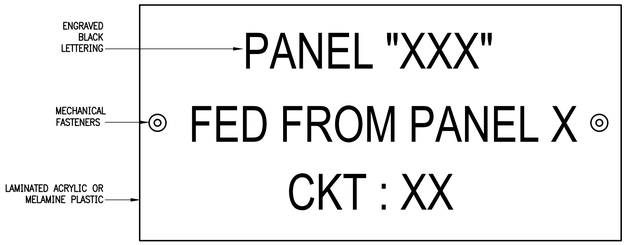

NOTE: ATTACH NAMEPLATES TO ALL ELECTRICAL GEAR AS NOTED ON SECTION 260553.

01 EQUIPMENT IDENTIFICATION LABEL DETAIL

SCALE : NOT TO SCALE

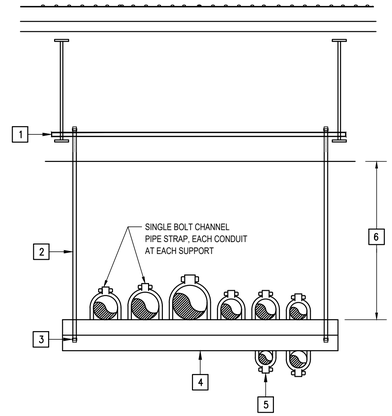

KEYED NOTES:

1. PROVIDE UNISTRUT STRUCTURAL CHANNEL SECURED TO TO JOIST AT BOTH ENDS.
2. PROVIDE 1/2" GALVANIZED THREADED ROD MINIMUM.
3. PROVIDE LOCKNUT.
4. PROVIDE GALVANIZED UNISTRUT 8'-0" O/C MAXIMUM.
5. 0'-1" MAXIMUM SIZE ON BOTTOM OF UNISTRUT.
6. VARIES.

02 HORIZONTAL RACEWAYS SUPPORT DETAIL

SCALE : NOT TO SCALE

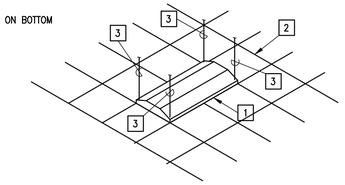

KEYED NOTES:

1. PROVIDE 2'x 4' LAY-IN LIGHT FIXTURE
2. SUSPENDED CEILING
3. PROVIDE TIE WIRE, CONNECT TO ALL FOUR CORNERS OF FIXTURE TO STRUCTURE ABOVE, INDEPENDENT OF CEILING SUPPORTS.

03 TYPICAL LAY-IN FIXTURE SUPPORT

SCALE : NOT TO SCALE

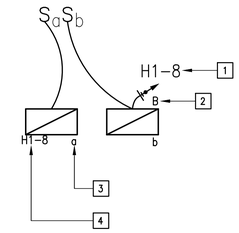

KEYED NOTES:

1. CIRCUIT HOMERUN
2. FIXTURE TYPE - REFER TO LIGHT FIXTURE SCHEDULE
3. INDICATES SWITCH CONTROLLING LIGHT FIXTURE.
4. INDICATES BRANCH CIRCUIT LIGHT FIXTURE IS CONNECTED TO

04 LIGHTING LEGEND DETAIL

SCALE : NOT TO SCALE

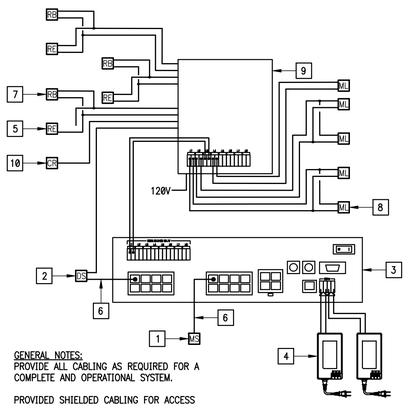

GENERAL NOTES:
PROVIDE ALL CABLING AS REQUIRED FOR A COMPLETE AND OPERATIONAL SYSTEM.

PROVIDED SHIELDED CABLING FOR ACCESS CARD CONNECTIONS.

PROVIDE PLENUM RATED CABLING FOR ABOVE CEILING APPLICATIONS.

KEYED NOTES:

1. PROVIDE AUDIO/VIDEO DESK TOP MASTER STATION AIPHONE MODEL NO. AX-8MV-W.
2. PROVIDE AUDIO/VIDEO/CARD READER SURFACE MOUNT DOOR STATION AIPHONE MODEL NO. AX-DVF-P.
3. PROVIDE RACK MOUNT CENTRAL EXCHANGE UNIT AIPHONE MODEL NO. AX-084C.
4. PROVIDE CENTRAL EXCHANGE UNIT POWER SUPPLY AIPHONE MODEL NO. PS-2420UL - TYPICAL.
5. PROVIDE DOOR REQUEST TO EXIT TYCO MODEL NO. T.REX-LT - TYPICAL.
6. PROVIDE CAT5e CABLE AND CONNECTORS.
7. PROVIDE DOOR RELEASE BUTTON ALARM CONTROLS MODEL NO. TS-14 - TYPICAL.
8. PROVIDE DOOR ELECTRO MAGNETIC LOCK SECO-LARM MODEL NO. 941SA-1K2PQ - TYPICAL.
9. PROVIDE ACCESS CONTROL UNIT NETAXS MODEL NO. NX4L1.
10. PROVIDE PROXIMITY CARD READER HID GLOBAL MODEL NO. 536B.

05 DOOR ACCESS SYSTEM DETAIL

SCALE : NOT TO SCALE

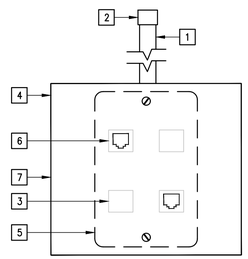

KEYED NOTES:

1. PROVIDE 1" EMT STUBBED ABOVE CLG.
2. PROVIDE INSULATING BUSHING
3. PROVIDE BLANK FILLER COVER
4. PROVIDE COVERPLATE
5. PROVIDE STEEL MUD RING
6. CATEGORY SIX JACK BY OWNER
7. PROVIDE 4"X4"X2-5/8" DEEP BOX

06 TYPICAL DATA/TELEPHONE OUTLET DETAIL

SCALE : NOT TO SCALE

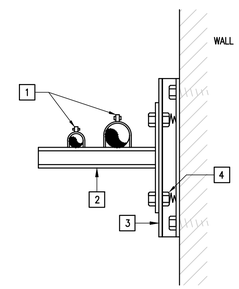

KEYED NOTES:

1. PROVIDE CONDUIT CLAMPS.
2. PROVIDE GALVANIZED UNISTRUT WALL BRACKET.
3. PROVIDE RAMSET OR BOLT GALVANIZED UNISTRUT TO WALL.
4. PROVIDE SELF HOLDING CLAMPING NUT WITH SPRING.

07 RACEWAY RUNS SUPPORT DETAIL

SCALE : NOT TO SCALE

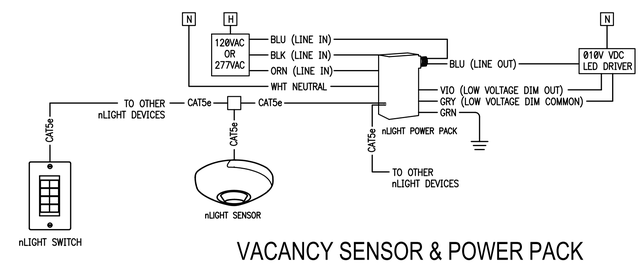

08 VACANCY SENSOR & POWER PACK WIRING DETAIL

SCALE : NOT TO SCALE

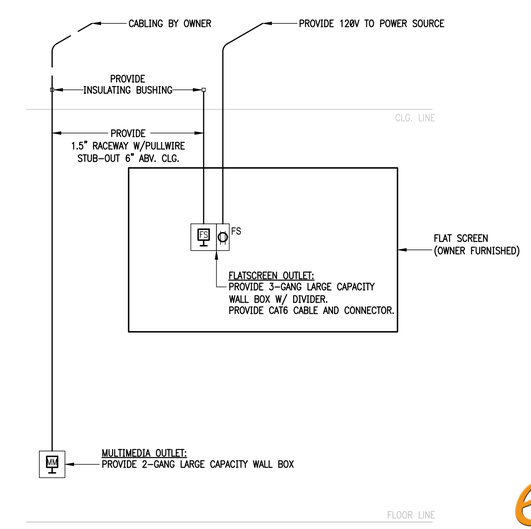

09 TYPICAL FLAT SCREEN DETAIL

SCALE : NOT TO SCALE

ethos engineering
119 W. VAN BUREN AVE. STE.101
HARLINGEN, TX
PHONE: 956-230-3435
TEXAS REGISTERED ENGINEERING FIRM F-15998

No.	REVISIONS	BY

GMS ARCHITECTS
1150 paredes line rd.
brownsville
texas 78526
(956) 546-0110
fax (956) 546-0196

SAN BENITO CISD
ADDITIONS AND RENOVATIONS AT SAN BENITO HS AND SULLIVAN ELEMENTARY
SAN BENITO TEXAS

BID PACKAGE "B"
SULLIVAN ELEMENTARY

STATE OF TEXAS
RAY PEYNADO
125390
LICENSED PROFESSIONAL ENGINEER
8.2.2019

COPYRIGHT 2019
GOMEZ MENDEZ SAENZ INC.
ARCHITECTS-PLANNERS

DATE	AUGUST 2, 2019
SCALE	As Shown
DRAWN	ETHOS
JOB	19V32
SHEET	BE4.01

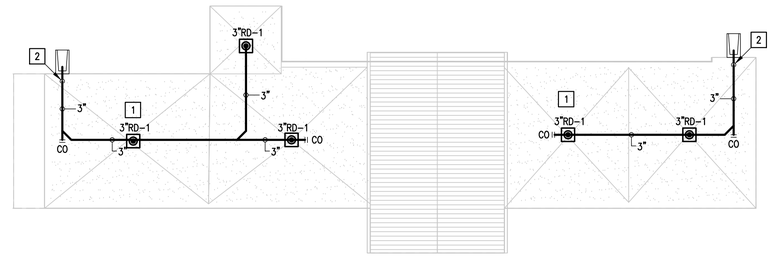

01 SULLIVAN ELEMENTARY ROOF PLAN
SCALE: 1/8"=1'-0"

NORTH

GENERAL NOTES:

1. ALL HORIZONTAL LEADERS TO BE A MINIMUM OF 1/8" PER FOOT SLOPE.
2. ALL VERTICAL LEADER LINES DOWN AND CONCEALED IN PLUMBING CHASE UNLESS OTHERWISE NOTED. REFER TO DRAWINGS.
3. COORDINATE ROOF DRAIN PIPING WITH GENERAL CONTRACTOR AND HVAC CONTRACTOR.
4. PROVIDE INSULATION ON ALL ABOVE GROUND STORM LINES. REFER TO SPECIFICATIONS FOR DETAILS.
5. STORM DRAIN PIPING AND SEWER PIPING SHOWN ON THIS PLAN TO BE INSTALLED UNDER THE ROOF.
6. SECONDARY STORM DRAINAGE SYSTEM BY ARCHITECTURAL VIA SCUPPERS, REFER TO ARCHITECTURAL DRAWINGS FOR MORE INFORMATION.

KEYED NOTES:

1. PROVIDE ROOF DRAIN AS SCHEDULED. SEE ASSOCIATED DETAILS ON THIS SHEET. (TYPICAL)
2. DROP STORM DRAIN PIPING IN WALL CAVITY. REFER TO ARCHITECTURAL SHEET AND COORDINATE INSTALLATION WITH GENERAL CONTRACTOR. SEE ASSOCIATED DETAILS ON THIS SHEET. (TYPICAL)

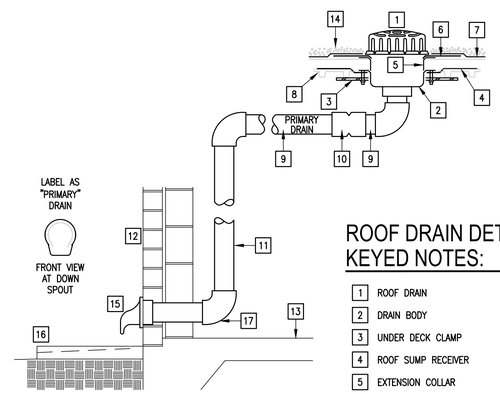

ROOF DRAIN DETAIL KEYED NOTES:

1. ROOF DRAIN
2. DRAIN BODY
3. UNDER DECK CLAMP
4. ROOF SUMP RECEIVER
5. EXTENSION COLLAR
6. 4# LEAD FLASHING-EXTEND MINIMUM 12" FROM DRAIN BODY
7. COUNTER FLASHING
8. ROOF DECK
9. MINIMUM 1/8" PER FEET SLOPE ON HORIZONTAL RUNS
10. RUBBER "O" RINGS TYPE EXPANSION COUPLING WITHIN 4 FEET OF EACH ROOF DRAIN.
11. RAIN WATER CONDUCTOR INSIDE WALL CAVITY.
12. WALL
13. FLOOR
14. ROOF
15. PROVIDE DOWNSPOUT NOZZLE EQUAL TO JOSAM 2510.
16. SPLASH BLOCK (GENERAL CONTRACTOR)
17. FILL BLOCK WITH CONCRETE AT ELBOW AREA

02 RD-1 PRIMARY ROOF DRAIN DETAIL
SCALE: NOT TO SCALE

PLUMBING FIXTURE SCHEDULE

MARK	MANUFACTURER & MODEL NUMBER	DESCRIPTION	CONNECTIONS				NOTES	REMARKS
			WASTE	VENT	CW	HW		
RD-1	MIFAB 1200-W	15" DIA. LARGE SUMP ROOF DRAIN, GALV. SUMP RECEIVER CAST IRON DRAIN BODY, C.I. WATERPROOFING MEMBRANE CLAMP RING WITH INTEGRAL GRAVEL STOP,OVERFLOW STANDPIPE, SELF-LOCKING POLYETHYLENE DOME STRAINER.	SEE PLANS	-	-	-	-	

No.	REVISIONS	BY

GMS ARCHITECTS
1150 paredes line rd.
brownsville
texas 78526
(956) 546-0110
fax (956) 546-0196

SAN BENITO CISD
ADDITIONS AND RENOVATIONS AT SAN BENITO HS AND SULLIVAN ELEMENTARY
SAN BENITO TEXAS

BID PACKAGE "B"
SULLIVAN ELEMENTARY

STATE OF TEXAS
CESAR A. GONZALEZ
108611
LICENSED
PROFESSIONAL ENGINEER
8.2.2019

COPYRIGHT 2019
GOMEZ MENDEZ SAENZ INC.
ARCHITECTS-PLANNERS

DATE	AUGUST 2, 2019
SCALE	As Shown
DRAWN	ETHOS
JOB	19V32
SHEET	BP3.01

ethos engineering
119 W. VAN BUREN AVE. STE.101
HARLINGEN, TX
PHONE: 956-230-3435
TEXAS REGISTERED
ENGINEERING FIRM
F-15996