BROWNSVILLE

INDEPENDENT SCHOOL DISTRICT

HANNA EARLY COLLEGE HIGH SCHOOL GYMNASIUM FACILITY

BROWNSVILLE **TEXAS**

VICINITY MAP - BROWNSVILLE TX

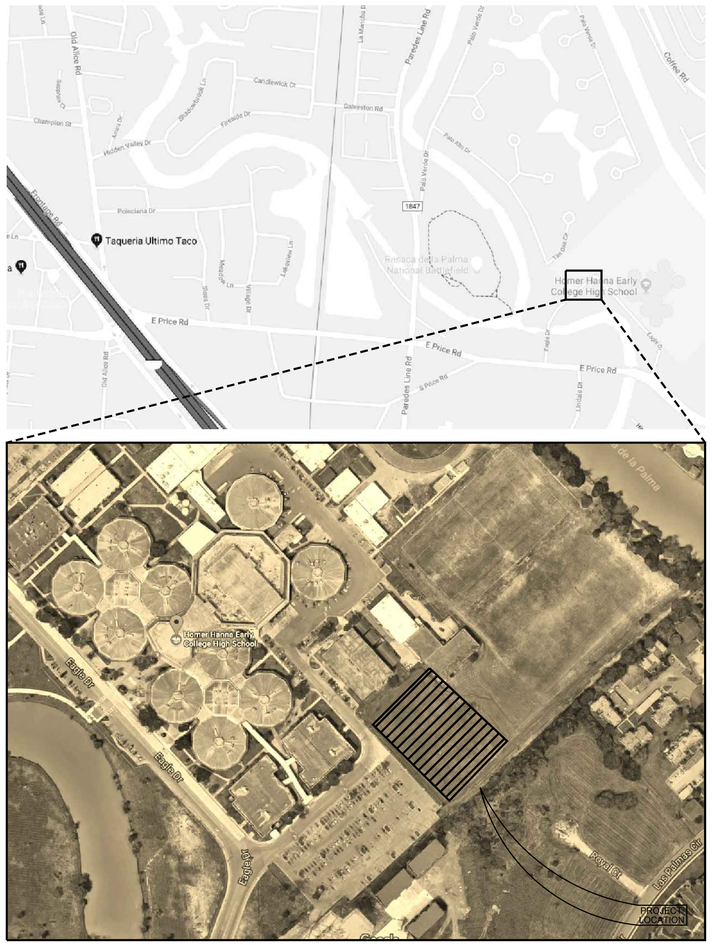

CSP # : 20-110

100% CD set

Board of Trustees 2019

Minerva M. Peña	President
Dr. Sylvia P. Atkinson	Vice President
Dr. Prisci Roca Tipton	Secretary
Philip T. Cowen	Assistant Secretary
Drue Brown	Member
Erasmo Castro	Member
Laura Perez-Reyes	Member
Dr. Sylvia Ann Reyna Hatton	Interim Superintendent

2019
Hanna Early College High School Gymnasium Facility
Gomez Mendez Saenz, Inc. Architects Brownsville, Texas

Board of Trustees 2019

Minerva M. Peña	President
Dr. Sylvia P. Atkinson	Vice President
Dr. Prisci Roca Tipton	Secretary
Philip T. Cowen	Assistant Secretary
Drue Brown	Member
Erasmo Castro	Member
Laura Perez-Reyes	Member
Dr. Sylvia Ann Reyna Hatton	Interim Superintendent
Gomez Mendez Saenz, Inc.	Architects
GRA Engineering	Structural Engineers
Ethos Engineering	MEP Engineers
Mejia & Rose Engineering	Civil Engineers
	General Contractor

BUILDING PLAQUE
30"WIDE X 24" HEIGHT BRONZE PLAQUE
TIMES NEW ROMAN FONT

DRAWING INDEX

CIVIL

C1 TOPOGRAPHIC SURVEY
C2 UTILITY LAYOUT
C2.1 UTILITY PROFILE
C3 PAVING AND GRADING PLAN
C4 DETAILS
C5 SANITARY SEWER LINE DETAILS
C6 WATER LINE DETAILS
C7 STROM WATER POLLUTION PREVENTION PLAN REQUIREMENTS

LANDSCAPE

L1.01 IRRIGATION PLAN
L1.02 IRRIGATION DETAILS
L2.01 LANDSCAPE PLAN
L2.02 LANDSCAPE SCHEDULE AND DETAILS

ARCHITECTURAL

G1.00 ACCESSIBILITY NOTES
G1.01 ACCESSIBILITY NOTES

A1.01 OVERALL SITE PLAN IMPROVEMENTS
A1.02 SITE PLAN ENLARGEMENT
A1.03 SITE DETAILS

A2.01 FLOORPLAN
A2.02 MEZZANINE FLOOR PLAN
A2.03 FIXTURE PLAN
A2.04 REFLECTED CEILING PLAN
A2.05 ROOFPLAN
A2.06 ROOF DETAIL
A2.07 COURT STRIPPING PLAN

A3.01 DOOR SCHEDULE & DETAILS\A4.00 BUILDING SECTIONS
A3.02 LOCKER ROOM / RESTROOM ENLARGEMENTS
A3.03 MILLWORK ELEVATIONS
A3.04 MILLWORK SECTIONS
A3.05 CONCESSION ENLARGEMENT & DETAILS

A4.01 BUILDING SECTIONS
A4.02 BUILDING SECTIONS
A4.03 EXTERIOR WALL SECTION
A4.04 EXTERIOR WALL SECTION
A4.05 EXTERIOR WALL SECTION
A4.06 EXTERIOR WALL SECTION
A4.07 EXTERIOR WALL SECTION
A4.08 EXTERIOR WALL SECTION
A4.09 EXTERIOR WALL SECTION

A5.01 EXTERIOR ELEVATIONS

STRUCTURAL

STRUCTURAL SHEET INDEX:
- S1.1 - General Structural Notes
- S1.2 - General Structural Notes
- S1.3 - General Structural Details
- S1.4 - General Structural Details
- S2.1 - Foundation Plan
- S2.1C - Foundation Control Joint Plan
- S2.1P - Foundation Pier Plan
- S2.2 - Foundation Details
- S2.3 - Foundation Details
- S3.1 - Framing Plan
- S3.2 - Mezzanine Framing Plan
- S3.3 - Frame & Joist Profiles
- S4.1 - Framing Details
- S4.2 - Framing Details

MECHANICAL - ELECTRICAL - PLUMBING

MEP1.01 MEP SITE PLAN
M2.01 MECHANICAL GENERAL NOTES & ABBREVIATIONS
M3.01 MECHANICAL PLAN
M4.01 MECHANICAL ENLARGED PLAN
M4.02 MECHANICAL ELEVATIONS
M4.03 MECHANICAL ELEVATIONS
M5.01 MECHANICAL SCHEMATIC DIAGRAM
M6.01 MECHANICAL SCHEDULES
M7.01 MECHANICAL DETAILS
M7.02 MECHANICAL DETAILS
ELECTRICAL:
E2.01 ELECTRICAL SYMBOL LEGEND AND ABBREVIATION
E3.01 LIGHTING PLAN
E4.01 ELECTRICAL PLAN
E4.02 MEZZANINE LIGHTING & ELECTRICAL PLAN
E5.01 ELECTRICAL SCHEDULES
E5.02 LIGHTING CONTROLS ONE-LINE DIAGRAM
E5.03 LIGHTING CONTROLS IMAGES
E6.01 ELECTRICAL RISER DIAGRAM
E7.01 ELECTRICAL PANEL SCHEDULES
E8.01 ELECTRICAL DETAILS
PLUMBING:
P2.01 PLUMBING PLAN
P3.01 WASTE & VENT PLAN
P3.02 WASTE & VENT PLAN
P4.01 PLUMBING ROOF PLAN
P5.01 PLUMBING SCHEDULES AND DETAILS
P5.02 PLUMBING DETAILS
FIRE SUPPRESSION:
FS2.01 FIRE SUPPRESSION PLAN

MEJIA AND ROSE, INC.
1643 WEST PRICE ROAD BROWNSVILLE, TX. 78521 (956) 544-3022 FAX. (956)-544-3068

LANDSCAPE
SSP LANDSCAPE DESIGN
802 EAST WASHINGTON BROWNSVILLE, TEXAS 78520 (956) 547-9788 FAX: (956) 547-9977

GOMEZ MENDEZ SAENZ, INC.
1150 PAREDES LINE ROAD
BROWNSVILLE, TEXAS 78526
(956) 546-0110 FAX: (956) 546-0196

STRUCTURAL ENGINEERS
1220 W. HARRISON HARLINGEN, TX 78550
PH. (956) 428-4461 FAX (956) 428-0281

ETHOS ENGINEERING
119 W. Van Buren Ave. Suite #101
Harlingen, TX 78550 78550
(956) 230-3435 FAX: (956)720-0830

No.	REVISIONS	BY

GMS ARCHITECTS
1150 Paredes Line Rd.
Brownsville TX 78526
(956) 546-0110
fax (956) 546-0196

BISD Hanna ECHS Gymnasium Facility

REGISTERED ARCHITECT DAVID A. MONREAL 19556 STATE OF TEXAS
6-14-2019

© Copyright 2019
Gomez Mendez Saenz Inc.
Architects-Planners
Interior Designers

Date: JUNE, 2019
Scale: As Noted
Project Architect: David Monreal, AIA
Drawn By: RB
Job No. BISD Hanna Gymnasium
Sheet:
COVER

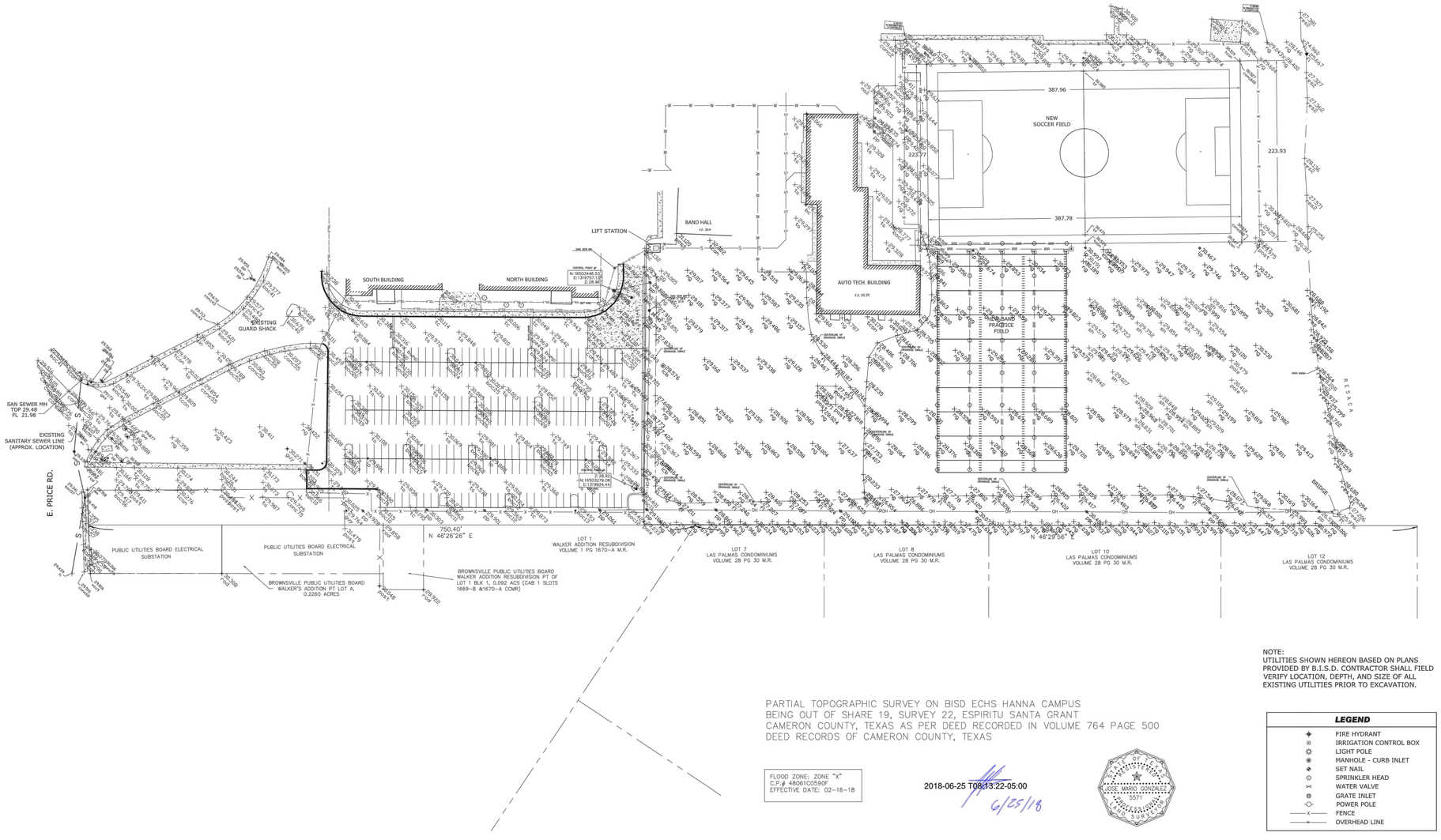

NOTE:
UTILITIES SHOWN HEREON BASED ON PLANS PROVIDED BY B.I.S.D. CONTRACTOR SHALL FIELD VERIFY LOCATION, DEPTH, AND SIZE OF ALL EXISTING UTILITIES PRIOR TO EXCAVATION.

PARTIAL TOPOGRAPHIC SURVEY ON BISD ECHS HANNA CAMPUS
BEING OUT OF SHARE 19, SURVEY 22, ESPIRITU SANTA GRANT
CAMERON COUNTY, TEXAS AS PER DEED RECORDED IN VOLUME 764 PAGE 500
DEED RECORDS OF CAMERON COUNTY, TEXAS

FLOOD ZONE: ZONE "X"
C.P.# 48061C0590F
EFFECTIVE DATE: 02-16-18

2018-06-25 T08:13:22-05:00
6/25/18

STATE OF TEXAS
REGISTERED
JOSE MARIO GONZALEZ
5571
PROFESSIONAL
LAND SURVEYOR

LEGEND

- FIRE HYDRANT
- IRRIGATION CONTROL BOX
- LIGHT POLE
- MANHOLE - CURB INLET
- SET NAIL
- SPRINKLER HEAD
- WATER VALVE
- GRATE INLET
- POWER POLE
- FENCE
- OVERHEAD LINE

RIO DELTA SURVEYING
24593 FM 88, MONTE ALTO, TX 78538
(TEL) 956-380-5154 (FAX) 956-380-5156
EMAIL: MARIO@RIODELTASURVEYING.COM
T.B.P.L.S. FIRM # 10013900

MGE

EXISTING CONDITION

SCALE: 1"=60'

M GARCIA ENGINEERING LLC
CIVIL ENGINEERING
400 W. Nolana Suite H.2
McAllen, Texas 78504
Bus. 956.687.9421
Fax 956.687.3211
www.mgarciaengineering.com

No.	REVISIONS	BY

GMS ARCHITECTS
1150 Paredes Line Rd.
Brownsville TX 78526
(956) 546-0110
fax (956) 546-0196

BISD HANNA ECHS TOPOGRAPHY

BROWNSVILLE, TX

JOB NO. 17-321
DRAWN BY: AG
CHECKED BY: MG
DATE: 06-08-18
REVISION:

DRAWING NO:
C2.0

BISD Hanna ECHS
Gymnasium Facility

INDEX

TOPOGRAPHIC SURVEY	C-1
UTILITY LAYOUT	C-2
UTILITY PROFILE	C-2.1
PAVING AND GRADING PLAN	C-3
DETAILS	C-4
SANITARY SEWER LINE DETAILS	C-5
WATER LINE DETAILS	C-6
STORM WATER POLLUTION PREVENTION REQUIRMENTS	C-7

© Copyright 2018
Gomez Mendez Saenz Inc.
Architects-Planners
Interior Designers

Date: June, 2019
Scale: As Noted
Project Architect: David Monreal, AIA
Drawn By:
Job No.: BISD Hanna Gymnasium
Sheet: C-1 OF C-7

CALL TEXAS 811 FOR SPOTTING OF UTILITIES
PRIOR TO ANY TYPE OF CONSTRUCTION!
1-800-344-8377

PROPOSED IMPROVEMENTS LEGEND

SYMBOL	DESCRIPTION		
	PROP. FIRE HYDRANT	F	PROP. FIRE LINE
	PROP. WATER METER WITH BACK FLOW PREVENTOR	ST	PROP. STORM SEWER LINE
	PROP. WATER VALVE	CO	PROP. CLEAN-OUT
S	PROP. SANITARY SEWER LINE		PROP. FITTING
W	PROP. WATER LINE		PROP. SANITARY SEWER MANHOLE
DW	PROP. DOMESTIC WATER LINE		PROP. WATER METER WITH BACK FLOW PREVENTOR
GAS	PROP. GAS LINE		

NOTES:
(1)- ALL SANITARY SEWER LINES TO BE PVC SDR-35
(2)- ALL WATERLINES 4" AND LARGER SHALL BE PVC C900 DR-25 PIPE.
(3)- WATERLINE SMALLER THAN 4" SHALL BE PVC SCH 40 PIPE.
(4)-SEE MEP DRAWINGS FOR EXACT POINT OF CONNECTION FOR WATER (W) FIRE (F) AND SEWER (S) LINES AT BUILDINGS.
(5)-GATE VALVES SHALL BE INSTALLED ON ALL WATERLINES GOING INTO BUILDINGS.
(6)- 4" SANITARY SEWER LINES ARE TO BE INSTALLED AT 1% SLOPE OR GREATER WITH CLEAN OUTS AT SPACING REQUIRED BY CODE. NOT ALL REQUIRED CLEAN OUTS ARE SHOWN HEREON.
4" SANITARY SEWER LINES ARE TO BE INSTALLED AT 0.5% SLOPE OR GREATER WITH CLEAN OUTS AT SPACING REQUIRED BY CODE. NOT ALL REQUIRED CLEAN OUTS ARE SHOWN HEREON.
6" SANITARY SEWER LINES ARE TO BE INSTALLED AT 0.40% SLOPE WITH MANHOLES AS SHOWN HEREON. CLEAN OUTS ARE NOT REQUIRED EXCEPT WHERE SHOWN AT ENDS OF LINES FOR FUTURE EXTENSION.
(7)- PROP. CONNECTION TO EXISTING WATER LINE AND SANITARY SEWER LINE PER BROWNSVILLE PUBLIC UTILITIES BOARD REQUIREMENTS

CONTRACTOR SHALL VERIFY ELEVATION OF SANITARY SEWER LINE AND WATER LINE TO BUILDINGS PRIOR TO CONSTRUCTION AND AT POINT OF CONNECTION AND PLAN ELEVATIONS
ALL PERMIT, FEES, INSPECTION FEES, METER FEES IMPACT FEES, AND ALL OTHERS APPLICABLE FEES ASSOCIATED WITH WATER AND SEWER SERVICE SHALL BE PAID BY THE CONTRACTOR

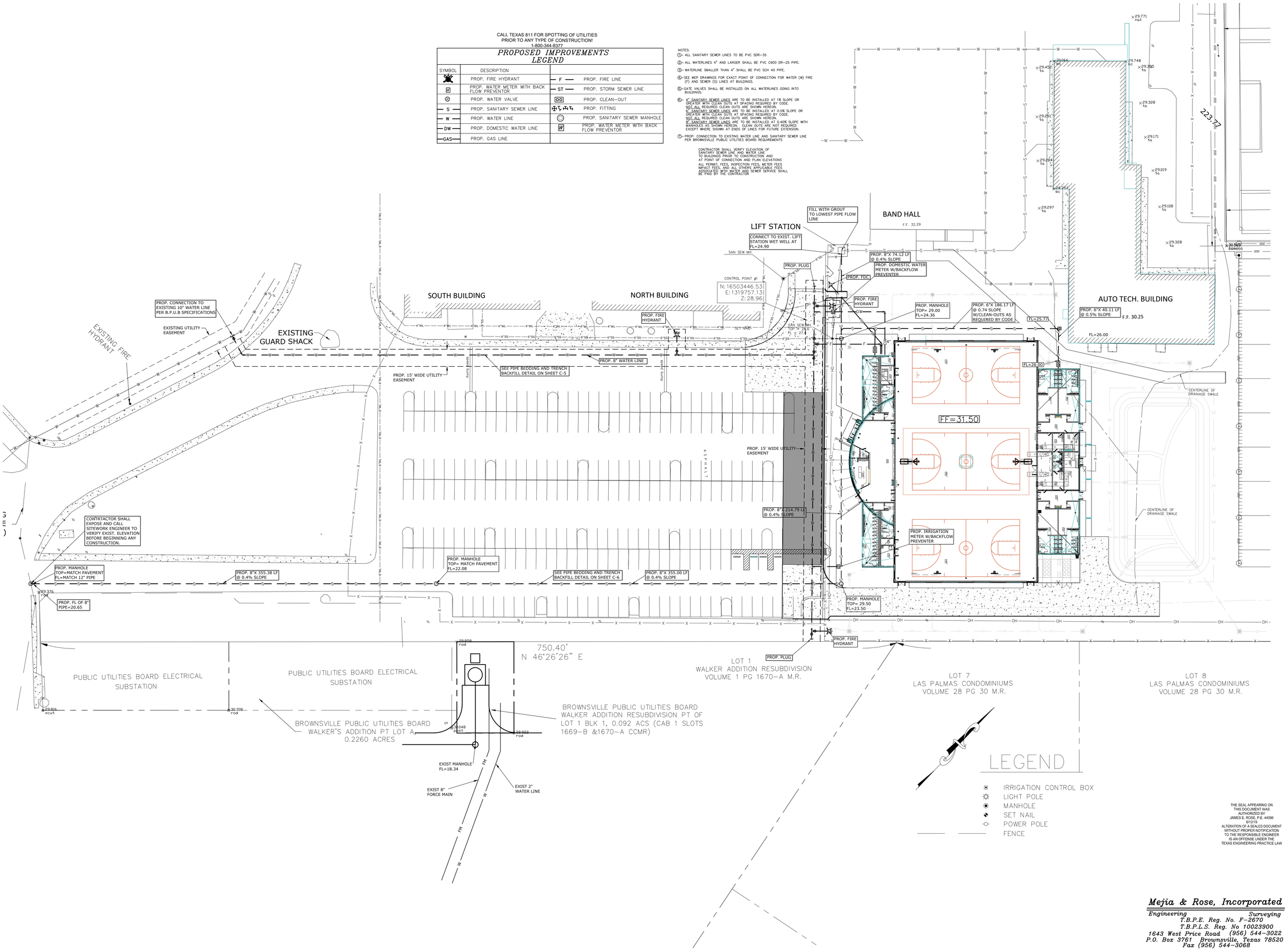

THE SEAL APPEARING ON THIS DOCUMENT WAS AUTHORIZED BY JAMES E. ROSE, P.E. 44096 6/12/19
ALTERATION OF A SEALED DOCUMENT WITHOUT PROPER NOTIFICATION TO THE RESPONSIBLE ENGINEER IS AN OFFENSE UNDER THE TEXAS ENGINEERING PRACTICE LAW

STATE OF TEXAS
JAMES E. ROSE
44096
LICENSED
PROFESSIONAL ENGINEER

Mejia & Rose, Incorporated
Engineering Surveying
T.B.P.E. Reg. No. F-2670
T.B.P.L.S. Reg. No 10023900
1643 West Price Road (956) 544-3022
P.O. Box 3761 Brownsville, Texas 78520
Fax (956) 544-3068

UTILITY PLAN 1"=30'

No.	REVISIONS	BY

GMS ARCHITECTS
1150 Paredes Line Rd.
Brownsville TX 78526
(956) 546-0110
fax (956) 546-0196

BISD Hanna ECHS
Gymnasium Facility

© Copyright 2018
Gomez Mendez Saenz Inc.
Architects-Planners
Interior Designers

Date:	June, 2019
Scale:	As Noted
Project Architect:	David Monreal, AIA
Drawn By:	
Job No:	BISD Hanna Gymnasium
Sheet:	C-2 OF C-7

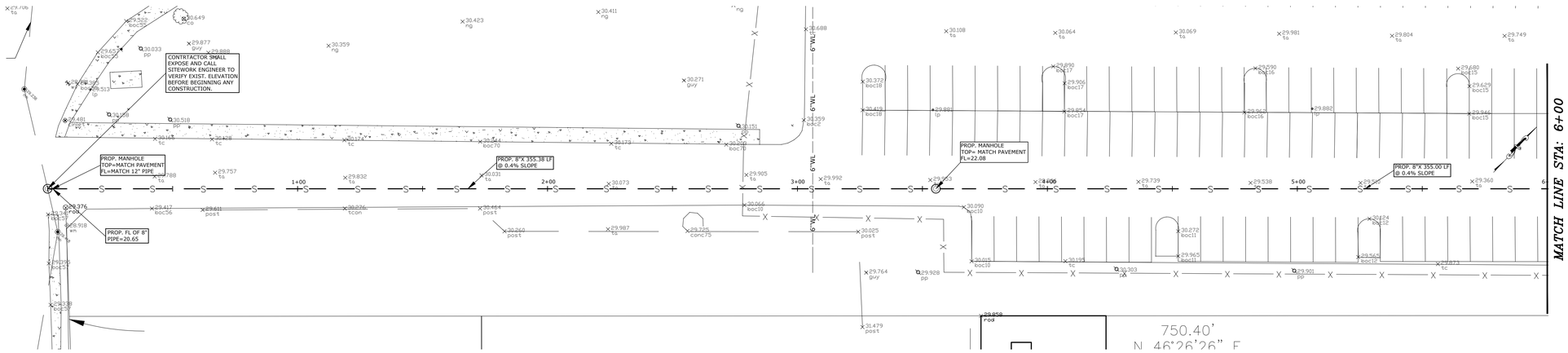

SCALE: 1"=20' H 1"=4' V

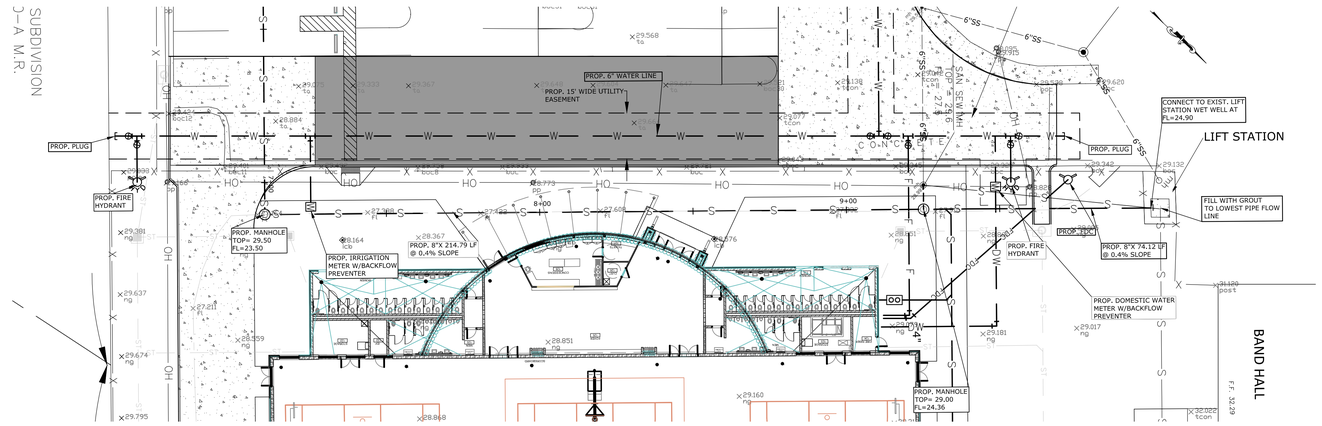

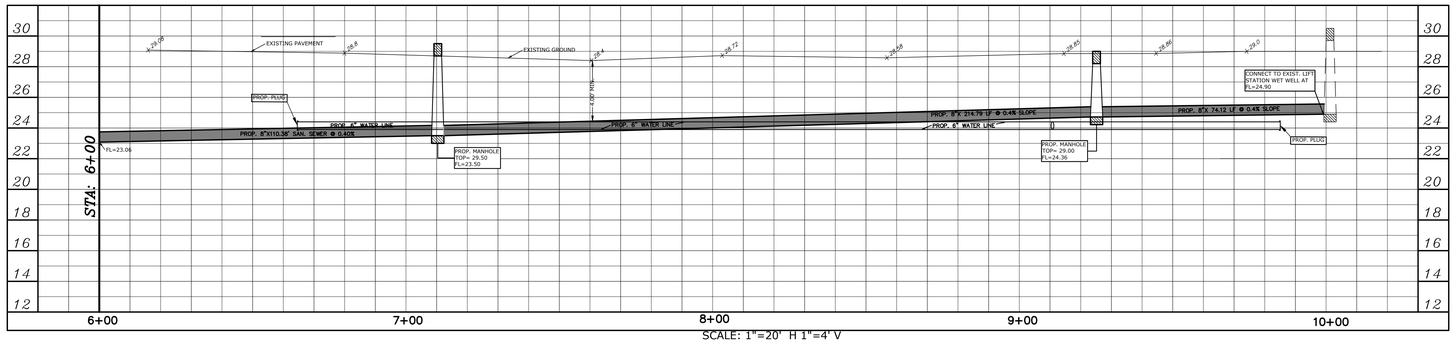

SCALE: 1"=20' H 1"=4' V

THE SEAL APPEARING ON THIS DOCUMENT WAS AUTHORIZED BY JAMES E. ROSE, P.E. 44096 6/12/19
ALTERATION OF A SEALED DOCUMENT WITHOUT PROPER NOTIFICATION TO THE RESPONSIBLE ENGINEER IS AN OFFENSE UNDER THE TEXAS ENGINEERING PRACTICE LAW

STATE OF TEXAS
JAMES E. ROSE
44096
LICENSED
PROFESSIONAL ENGINEER

© Copyright 2018
Gomez Mendez Saenz Inc.
Architects-Planners
Interior Designers

Date: June, 2019
Scale: As Noted
Project Architect: David Monreal, AIA
Drawn By:
Job No.: BISD Hanna Gymnasium
Sheet: C-2.1 OF C-7

Mejia & Rose, Incorporated
Engineering *Surveying*
T.B.P.E. Reg. No. F-2670
T.B.P.L.S. Reg. No 10023900
1643 West Price Road (956) 544-3022
P.O. Box 3761 Brownsville, Texas 78520
Fax (956) 544-3068

UTILITY PROFILE 1"=20'

No.	REVISIONS	BY

GMS ARCHITECTS
1150 Paredes Line Rd.
Brownsville TX 78526
(956) 546-0110
fax (956) 546-0196

BISD Hanna ECHS
Gymnasium Facility

25 YEAR STORM
PRE-DEVELOPMENT RUNOFF RATE (Q=CIA)

Reach	Time of Conc. (min.)	Intensity (In/hr)	Area (acres)	Runoff Coef. C	Discharge Q (cfs)
Overall	80	3.20	21.368	0.27	18.46

DETENTION CALCULATION SHEET

TOTAL TRIBUTARY AREA:	4.00	acres
DEVELOPED RUNOFF COEFFICIENT:	0.84	
RELEASE RATE:	5.94	cfs
STORAGE VOLUME DETERMINATION:	0.597	acre-ft

RUNOFF FACTOR C	STORM DURATION (hr.)	RAINFALL INTENSITY (In/hr)	DRAINAGE AREA (acres)	INFLOW RATE (Q=CIA) (cfs)	RELEASE RATE (cfs)	STORAGE RATE Q1-Q2 (cfs)	STORAGE CALC. 1/12(Q1-Q2)(T) (acre-ft.)
0.84	0.17	7.90	4.000	26.54	5.94	20.60	0.292
0.84	0.33	6.50	4.000	21.84	5.94	15.90	0.437
0.84	0.50	5.50	4.000	18.48	5.94	12.54	0.523
0.84	0.67	4.85	4.000	16.30	5.94	10.36	0.578
0.84	0.83	4.30	4.000	14.44	5.94	8.50	0.607
0.84	1.00	3.90	4.000	13.10	5.94	7.16	0.597
0.84	1.50	3.00	4.000	10.08	5.94	4.14	0.518
0.84	2.00	2.45	4.000	8.23	5.94	2.29	0.382
0.84	3.00	2.10	4.000	7.06	5.94	1.12	0.279
0.84	4.00	1.80	4.000	6.05	5.94	0.11	0.036
0.84	5.00	1.55	4.000	5.21	5.94	−0.73	−0.305
0.84	6.00	1.40	4.000	4.70	5.94	−1.24	−0.618
0.84	7.00	1.10	4.000	3.70	5.94	−2.24	−1.309
0.84	8.00	0.90	4.000	3.02	5.94	−2.92	−1.946
0.84	9.00	0.80	4.000	2.69	5.94	−3.25	−2.439
0.84	10.00	0.74	4.000	2.49	5.94	−3.45	−2.878

TOTAL VOLUME REQUIRED= 26,005 cu. ft.
TOTAL VOLUME PROVIDED= 33,890.5 cu. ft.
ACTUAL RELEASE RATE: 5.94 cfs

GRADING PLAN NOTES

1. GRADE ALL AREAS (SMOOTH AND FINELY GRADED AS NEEDED TO RECIEVE HYDROMULCHING OR SOD) TO DRAIN TO THE NEAREST DRAINAGE OUTLET OR SWALE
2. SIDEWALK TO MATCH FINISHED FLOOR OR DOORWAYS. SLOPE AWAY FROM BUILDING @ 2% SLOPE
3. ALL DEBRIS AND EXCESS EARTH MATERIAL GENERATED BY THE SITEWORK OPERATIONS WILL BECOME PROPERTY OF THE CONTRACTOR TO BE REMOVED FROM THE SITE AND PROPERLY DISPOSED AT HIS EXPENSE.
4. NO SIDEWALKS SHALL HAVE A CROSS SLOPE GREATER THAN 2% OR LONGITUDINAL SLOPE GREATER THAN 5%.
5. EXCEPT WHERE SPECIFICALLY SHOWN ON PLANS. STORM SEWER PIPE 12" TO 60" DIAMETER SHALL BE: REINFORCED CONCRETE PIPE (CLIII RUBBER GASKETED) OR ADS HP HIGH PERFORMANCE POLYPROPYLENE PIPE WITH WATER TIGHT FITTINGS. STORM SEWER PIPE 4" TO 10" DIAMETER SHALL BE: CORRUGATED POLYETHYLENE PIPE SMOOTH INTERIOR ADS N-12 HQ PIPE WITH WATER TIGHT FITTINGS OR APPROVED EQUAL MEETING AASHTO DESIGNATION M252-921 OR PVC SDR 35 PIPE. ALL STORM SEWER PIPE SHALL BE BEDDED IN SAND, SAME AS SANITARY SEWER AND WATER LINE PIPE.
6. BACKFILL ALL CURB & GUTTER, PAVEMENT EDGES AND SIDEWALKS TO 3" BELOW TOP OF CURB OR SIDEWALK AND SLOPE TO EXISTING GROUND AT 10 TO 1.
7. NO IRRIGATION SPRINKLER HEADS OR PIPING SHALL BE INSTALLED IN ANY AREA UNTILL FINAL GRADING IN THAT AREA HAS BEEN COMPLETED AND APPROVED BY SITEWORK ENGINEER.
8. SAW CUT EXISTING ASPHALT IN A NEAT STRAIGHT LINE
9. MATCH EXISTING ASPHALT
10. PROP. CONNECTION TO ROOF DRAIN
11. PROP. DRILL 6" DEEP INTO EXISTING WALK AT 12" O.C. AND INSERT #3 BAR X 18" LONG.
12. IN THE EVENT THAT ON-SITE EXCAVATION DOES NOT GENERATE ENOUGH MATERIAL TO ACHIEVE THE PROPOSED GRADING PLAN, THE CONTRACTOR SHALL PROVIDE AT HIS EXPENSE APPROVED SOIL MATERIAL FROM OFF-SITE SOURCES.

LEGEND

- INDICATES PROPOSED GROUND SURFACE SPOT ELEVATION
- INDICATES PROPOSED DIRECTION OF GRADE
- INDICATES SIDEWALK TRENCH UNDER DRAIN
- INDICATES PROPOSED SWALE
- 27.5 INDICATES TYPICAL PROPOSED FINISHED GROUND SURFACE CONTOUR
- TC 25.75 INDICATES PROPOSED TOP OF CURB ELEV.
- SL 25.65 INDICATES PROPOSED TOP OF SIDEWALK ELEV.
- P 25.75 INDICATES PROPOSED PAVEMENT ELEVATION
- G 25.75 INDICATES PROPOSED GUTTER ELEVATION

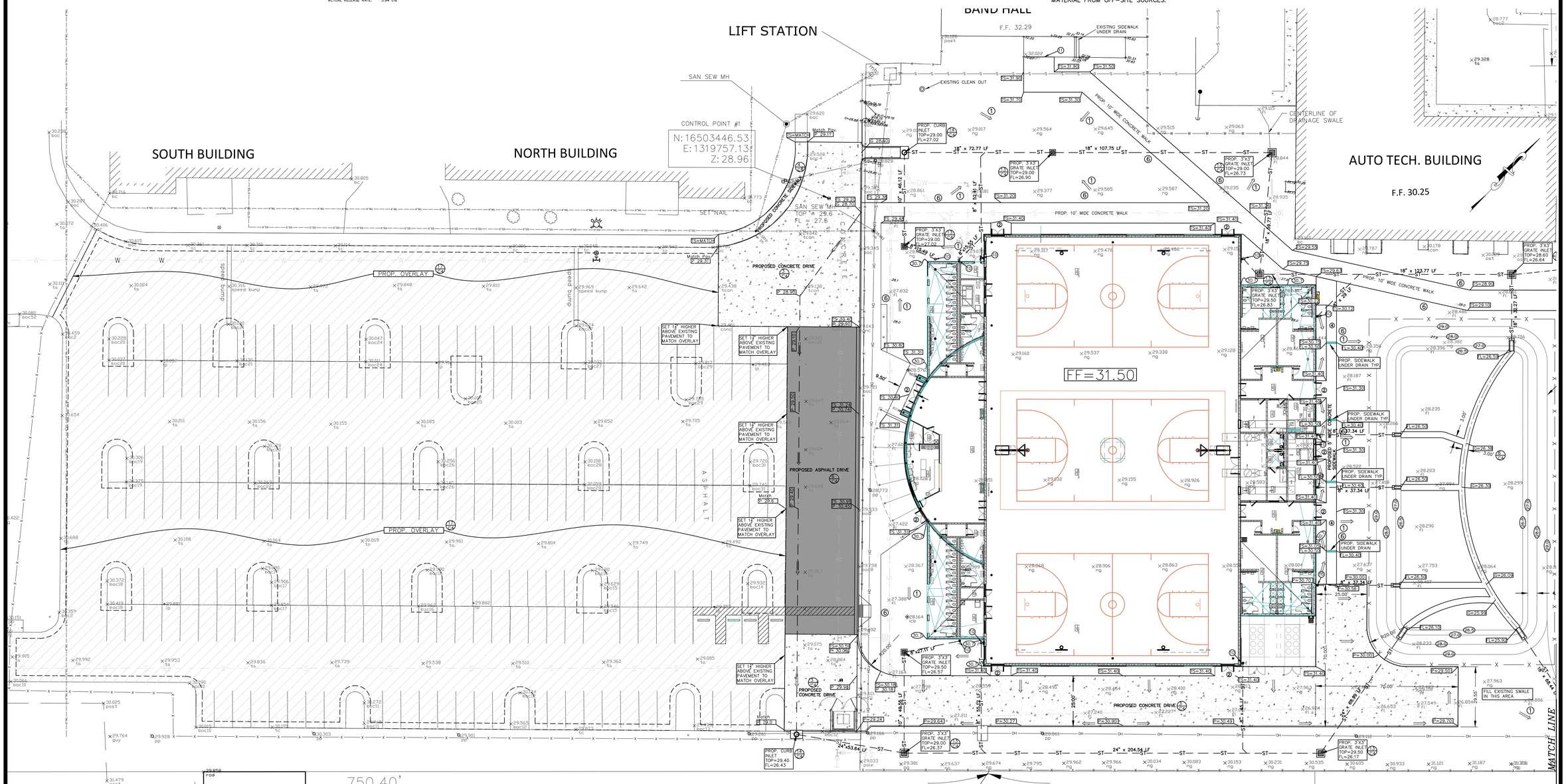

THE SEAL APPEARING ON THIS DOCUMENT WAS AUTHORIZED BY JAMES E. ROSE, P.E. 44096 6/12/19

ALTERATION OF A SEALED DOCUMENT WITHOUT PROPER NOTIFICATION TO THE RESPONSIBLE ENGINEER IS AN OFFENSE UNDER THE TEXAS ENGINEERING PRACTICE LAW

Mejia & Rose, Incorporated
Engineering *Surveying*
T.B.P.E. Reg. No. F-2670
T.B.P.L.S. Reg. No 10023900
1643 West Price Road (956) 544-3022
P.O. Box 3761 Brownsville, Texas 78520
Fax (956) 544-3068

GRADING AND PAVING 1"=20'

No.	REVISIONS	BY

GMS ARCHITECTS
1150 Paredes Line Rd.
Brownsville TX 78526
(956) 546-0110
fax (956) 546-0196

BISD Hanna ECHS
Gymnasium Facility

STATE OF TEXAS
JAMES E. ROSE
44096
LICENSED PROFESSIONAL ENGINEER

© Copyright 2018
Gomez Mendez Saenz Inc.
Architects-Planners
Interior Designers

Date: June, 2019
Scale: As Noted
Project Architect: David Monreal, AIA
Drawn By:
Job No: BISD Hanna Gymnasium
Sheet: **C-3** OF C-7

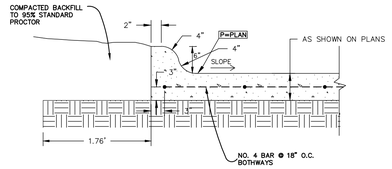

1 MONOLITHIC CURB

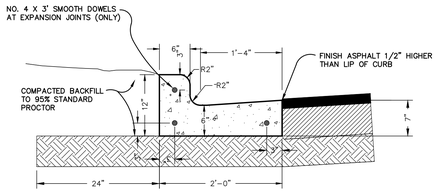

2 CURB & GUTTER DETAIL

SCALE: 1" = 1'

NOTE:

Expansion joints will be placed at curb returns, inlets, and end of each pour with intervals not to exceed 40 L.F. Joints will consists of 1/2" pre-molded expansion joint material with 3 – 36" x 1/2" dowels, one end greased and wrapped. Care must be taken that the dowels are staight and laid parallel with curb and no concrete "plugs" or other material be allowed through the dowel holes or expansion material that would prevent joint from operating as an expansion joint. Expansion joint material shall be pre-molded asphalt impregnated expansion joint material conforming to ASTM D 994 (NOT WOOD FIBER TYPE)

Dummy joints shall be 2" deep and placed at 10 ft. intervals.

Concrete shall be 3000 psi conforming to the requirement of "Reinforced Concrete Structures", when not shown on the drawings, and shall also contain 1.5 lbs. of fibermess per cubic yard.

All exposed concrete surfaces, (sidewalks, concrete pavement, curb & gutter, etc.) shall be treated with curing compound, resin base ASTM C 309, Type 2 with pigmented tint of fugitive dye.

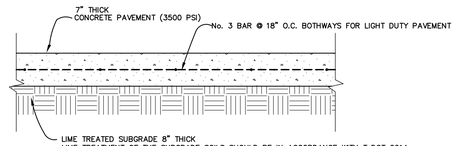

LIME TREATED SUBGRADE 8" THICK
LIME TREATMENT OF THE SUBGRADE SOILS SHOULD BE IN ACCORDANCE WITH TxDOT 2014 STANDARD SPECIFICATIONS FOR CONSTRUCTION AND MAINTENANCE OF HIGHWAYS, STREETS AND BRIDGES, ITEM 260, LIME TREATMENT (ROAD-MIXED). LIME TREATMENT SUBGRADE SOILS SHOULD BE COMPACTED TO A MINIMUM OF 95 PERCENT OF THE MAXIMUM DRY DENSITY AT A MOISTURE CONTENT WITHIN THE RANGE OF TWO PERCENTAGE POINTS BELOW THE OPTIMUM MOISTURE CONTENT TO TWO PRECENTAGE POINTS ABOVE THE OPTIMUM MOISTURE CONTENT AS DETERMINED BY ASTM D1557

CONCRETE PAVEMENT:

CONCRETE WITH DESIGN COMPRESSIVE STRENGTH OF 3500 PSI AT 28 DAYS.

SLUMP AT POINT OF PLACEMENT SHALL NOT EXCEED 5 INCHES

AIR CONTENT AT POINT OF PLACEMENT 3 TO 5 PERCENT

ALL EXPOSED CONCRETE SURFACES, (SIDEWALKS, CONCRETE PAVEMENT, CURB & GUTTER, ETC.) SHALL BE TREATED WTH CURING COMPOUND, RESIN BASE ASTM C 309, TYPE 2 WITH PIGMENTED TINT OF FUGITICE DYE,

3 CONCRETE PAVEMENT

N.T.S.

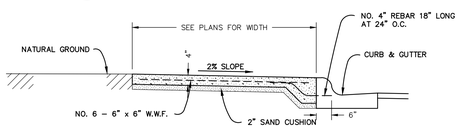

4 SIDEWALK ADJACENT TO CURB AND GUTTER

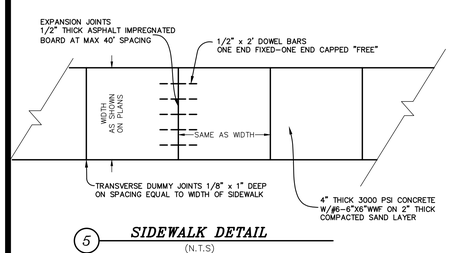

5 SIDEWALK DETAIL

(N.T.S)

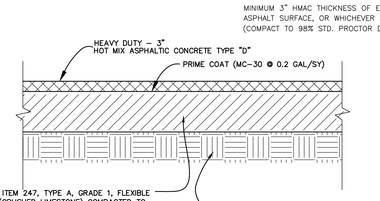

6 ASPHALT PAVEMENT

HOT MIX ASPHALTIC CONCRETE TYPE "D" MEETING THE REQUIREMENTS OF 2014 TXDOT SPECIFICATION ITEM 341 AND SPECIFIC CRITERIA FOR JOB MIXING.

HVEEM STABITITY SHALL BE AT LEAST 40.

COMPACTION STABILITY SHALL BE BETWEEN 92 AND 95 PERCENT OF MAXIMUM THEORETICAL DENSITY.

ASPHALTIC CEMENT CONTENT SHALL BE WITHIN TOLERANCE OF ±.3 PERCENT OF SPECIFIC MIX DESIGN.

75 TO 85 PERCENT OF THE VOIDS OF THE MINERAL AGGREGATE SHALL BE FILLED WITH APHALTIC CEMENT.

COARSE AGGREAGATE SHALL BE 100% LIMESTONE.

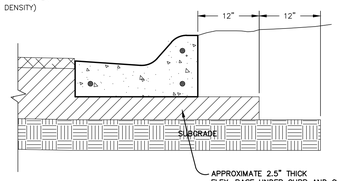

PAVEMENT AT CURB & GUTTER SECTION

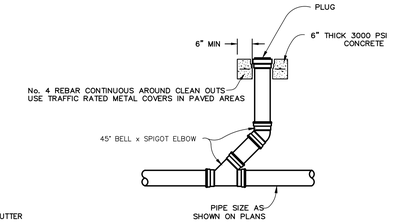

10 CLEANOUT

(N.T.S.)

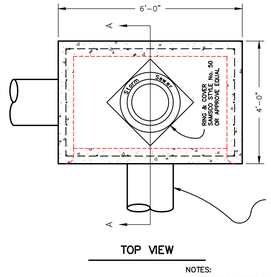

TOP VIEW

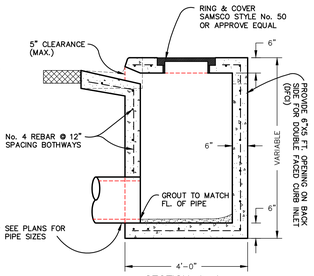

SECTION A–A

NOTES:

1. PRECAST INLETS MY BE USED SUBJECT TO ENGINEER'S APPROVAL.
2. CONCRETE FOR GRATE INLET SHALL HAVE A MINIMUM COMPRESSIVE STRENGHT OF 3,500 P.S.I. AT 28 DAYS
3. BASE AND REINFORCING SHALL EXTEND AT LEAST 6" BEYOND OUTSIDE OF PRECAST BOXES.
4. CONTACT POINT BETWEEN BASE AND PRECAST BOX WALLS SHALL BE GROUTED INSIDE AND OUTSIDE.

14 CURB INLET DETAIL

N.T.S.

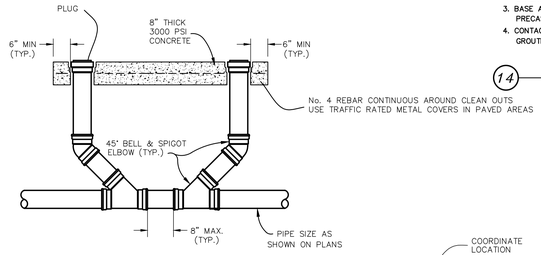

11 TWO-WAY CLEANOUT

(N.T.S.)

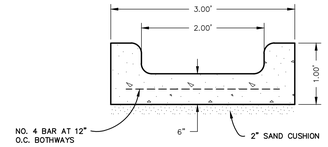

7 CONCRETE SPILLWAY

SCALE: 1" = 1'

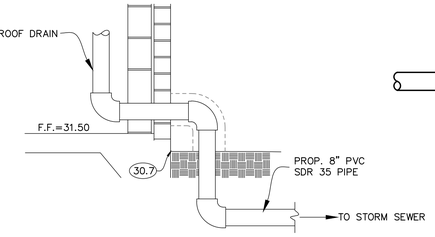

10 DETAIL FOR ROOF DRAIN CONNECTION TO STORM SEWER

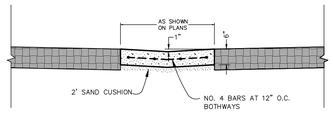

8 CONCRETE VALLEY GUTTER

N.T.S.

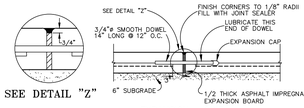

SEE DETAIL "Z"

Ⓐ EXPANSION JOINT

SAME FOR REINFORCED AND UNREINFORCED PAVEMENT AND CONCRETE SIDEWALKS (USE 1/2" DOWEL ON 4" THICK SIDEWALK)

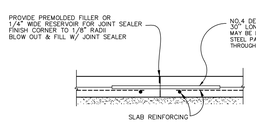

Ⓑ CONSTRUCTION JOINT

NOTE: CONSTRUCTION JOINTS TO BE USED AT END OF EACH CONCRETE POUR

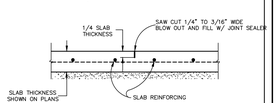

Ⓒ CONTROL JOINT

NOTE: FOR ALL CONC. JOINTS

JOINT SEALING COMPOUND SHALL BE A SINGLE COMPONENT, COLD APPLIED, SELF-LEVELING POURABLE GRADE EXPANSION JOINT SEALANT MEETING THE REQUIREMENTS OF A.S.T.M. SPECIFICATION C-920 TYPE "S" GRADE "P" CLASS 25 (SONOLASTIC SL-1 SONNEBORNE OR APPROVED EQUAL.)

9 CONCRETE PAVEMENT JOINTING DETAILS

Ⓐ EXPANSION JOINT SPACING SHALL NOT EXCEED 75 FEET IN EITHER DIRECTION
Ⓑ CONSTRUCTION AND/OR Ⓒ CONTROL JOINT SPACING SHALL NOT EXCEED 15 FEET IN EITHER DIRECTION

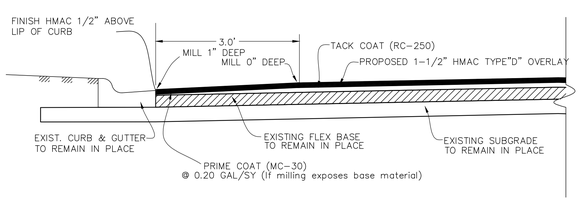

17 OVERLAY CROSS SECTION

N.T.S.

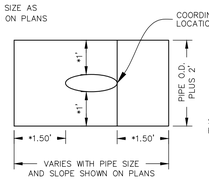

PLAN VIEW

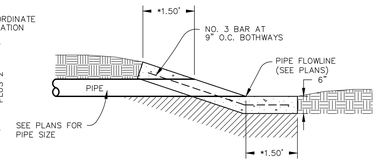

SIDE VIEW

15 HEADWALLL

* USE DIMENSIONS SHOWN FOR PIPES 12" DIAMETER AND SMALLER.
* 2' DIMENSIONS REQUIRED FOR PIPES 15" DIAMETER AND LARGER.

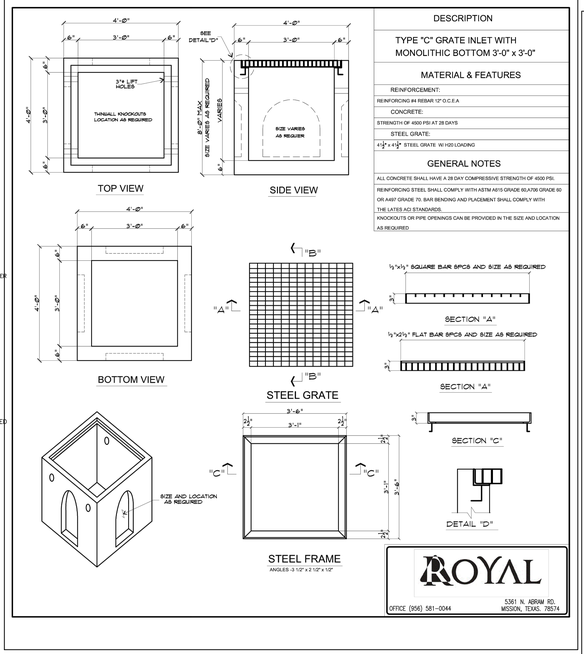

13 3'X3' GRATE INLET

(N.T.S.)

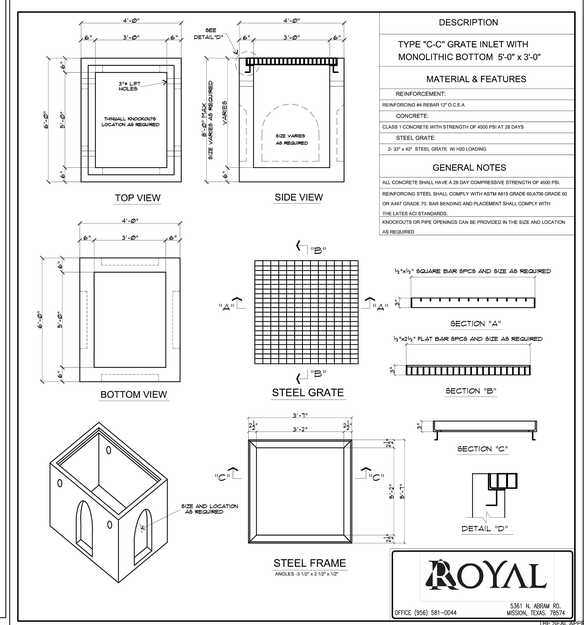

16 3'X5' GRATE INLET

(N.T.S.)

THE SEAL APPEARING ON THIS DOCUMENT WAS AUTHORIZED BY JAMES E. ROSE P.E. 44096

ALTERATION OF A SEALED DOCUMENT WITHOUT PROPER NOTIFICATION TO THE RESPONSIBLE ENGINEER IS AN OFFENSE UNDER THE TEXAS ENGINEERING PRACTICE LAW

Mejia & Rose, Incorporated

Engineering Surveying
T.B.P.E. Reg. No. F-2670
T.B.P.L.S. Reg. No 10023900
1643 West Price Road (956) 544-3022
P.O. Box 3761 Brownsville, Texas 78520
Fax (956) 544-3068

DETAIL SHEET

No.	REVISIONS	BY

GMS ARCHITECTS
1150 Paredes Line Rd.
Brownsville TX 78526
(956) 546-0110
fax (956) 546-0196

BISD Hanna ECHS Gymnasium Facility

STATE OF TEXAS
JAMES E. ROSE
44096
LICENSED
PROFESSIONAL ENGINEER

© Copyright 2018

Gomez Mendez Saenz Inc.
Architects-Planners
Interior Designers

Date:	June, 2019
Scale:	As Noted
Project Architect:	David Monreal, AIA
Drawn By:	
Job No:	BISD Hanna Gymnasium
Sheet:	C-4 OF C-7

Jun 13, 2019 – 12:28pm(C:\Users\residiyar\Desktop\20330_gms_hanna_gym_jim_ush\DWG\C4 DETAIL SHEET.dwg

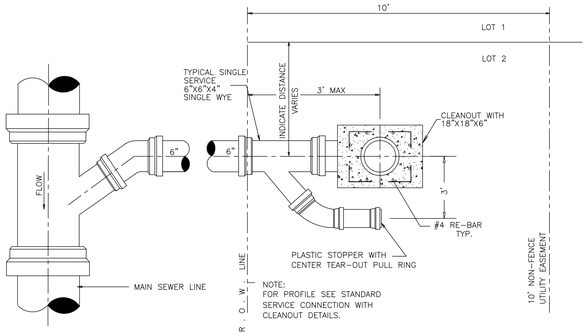

NOTE:
FOR PROFILE SEE STANDARD SERVICE CONNECTION WITH CLEANOUT DETAILS.

PLAN – SINGLE SERVICE

NOT TO SCALE

*NOTE: CONTRACTOR SHALL COORDINATE WITH INSPECTOR ON THE LOCATION OF ALL SERVICE LATERALS.

DETECTION NOTE:
A SOUND DETECTION REFLECTOR "STU-DEC-TA-CAL" BY FRIFFOLYN, INC. OR AN APPROVED SUBSTITUTE , WILL BE FASTENED TO THE END OF EACH SERVICE CONNECTION AND EXTENDED TO BE VISIBLE ABOVE FINAL GRADE TO FACILITATE LOCATING SERVICE STUBS.

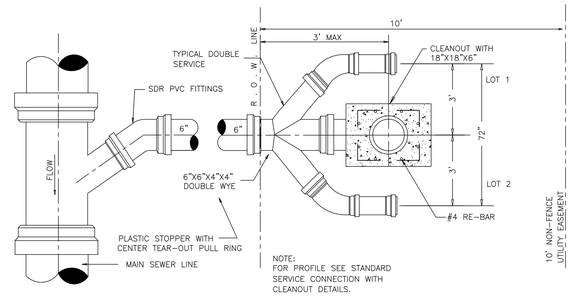

NOTE:
FOR PROFILE SEE STANDARD SERVICE CONNECTION WITH CLEANOUT DETAILS.

PLAN – DOUBLE SERVICE NEW DEVELOPMENT

NOT TO SCALE

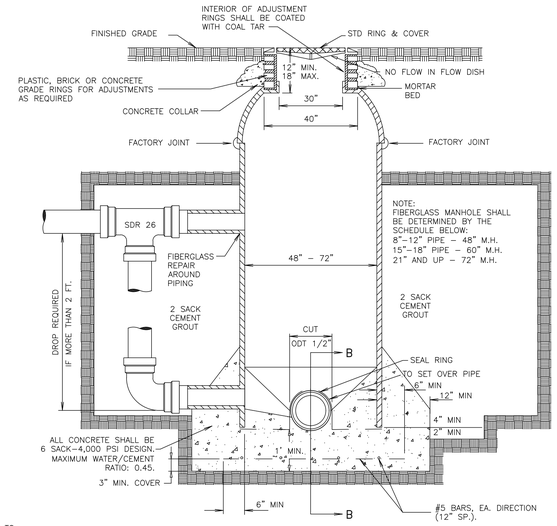

NOTE:
FIBERGLASS MANHOLE SHALL BE DETERMINED BY THE SCHEDULE BELOW:
8"–12" PIPE – 48" M.H.
15"–18" PIPE – 60" M.H.
21" AND UP – 72" M.H.

TYPICAL FIBERGLASS MANHOLE WITH DROP STRUCTURE SECTION A–A

NOT TO SCALE

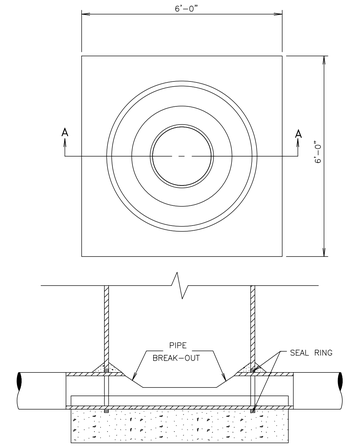

SECTION B–B

NOT TO SCALE

NOTES:
6'X6' – 4' DIA. M.H.
7'X7' – 5' DIA. M.H.
8'X8' – 6' DIA. M.H.

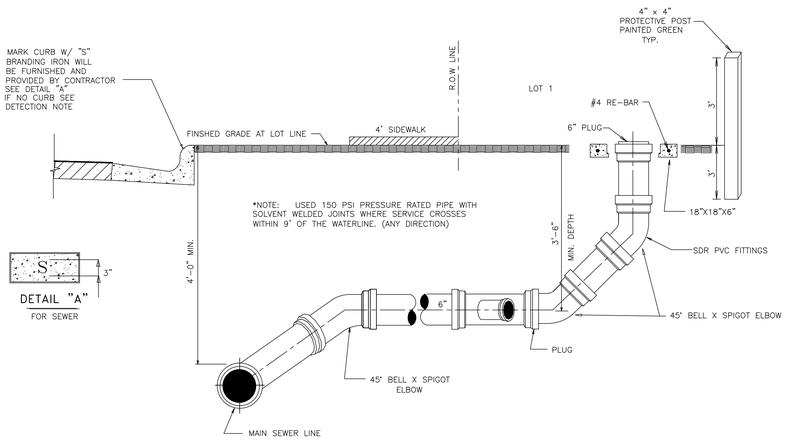

TYPICAL SHORT SERVICE CONNECTION WITH STANDARD CLEANOUT

NOT TO SCALE

*NOTE: CONTRACTOR SHALL COORDINATE WITH INSPECTOR ON THE LOCATION OF ALL SERVICE LATERALS.

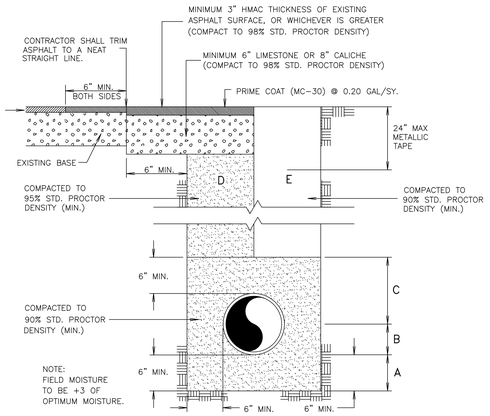

TYPICAL PIPE BEDDING AND TRENCH BACKFILL DETAIL

NOT TO SCALE

A SAND BEDDING PLACED BEFORE PIPE IS LAID UP TO FLOW LINE OF PIPE (MIN. THICKNESS = 6").

B SAND BACKFILL PLACED AFTER PIPE IS LAID FROM BOTTOM OF PIPE TO SPRING LINE OF PIPIE (4" LIFTS, HAND TAMPED).

C SAND BACKFILL PLACED FROM SPRING LINE OF PIPE TO 6" ABOVE TOP OF PIPE (6" LIFTS, HAND TAMPED).

D SAND BACKFILL, CLASS "A" (6" LIFTS, MECHANICAL COMPACTION).

E EARTH BACKFILL, CLASS "B" (12" LIFTS, MECHANICAL COMPACTION).

FOUNDATION PREPERATION (WELLPOINTS, GRAVEL OR CEMENT STABILIZATION, OR APPROVED SUBSTITUTE) SHALL BE REQUIRED WHEN TRENCH BOTTOM IS STABLE.

BACKFILL AT STRUCTURES SHALL BE PLACED IN UNIFORM LAYERS, MOISTENED AS REQUIRED TO APPROXIMATE OPTIMUM MOISTURE CONTENT, AND COMPACTED TO 95% STD. PROCTOR DENSITY. THE THICKNESS OF EACH LOOSE LAYER SHALL NOT EXCEED 6". STRUCTURE BACKFILL MATERIAL SHALL BE SAND, APPROVED SITE SOIL, OR OTHER APPROVED.

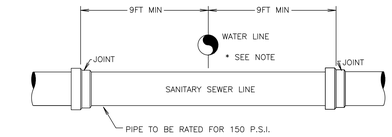

TYPICAL WATER & SEWER LINE CROSSING

NOT TO SCALE

* NOTE:
2 FT. MIN. ELEVATION SEPARATION BETWEEN WATER AND SEWER MAINS. IF UNABLE, ENCASEMENT REQUIRED. ENCASEMENT CAN BE STEEL CASING OR CONCRETE PIPE.

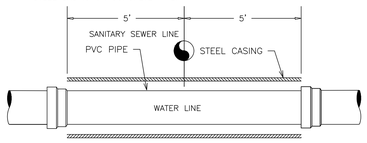

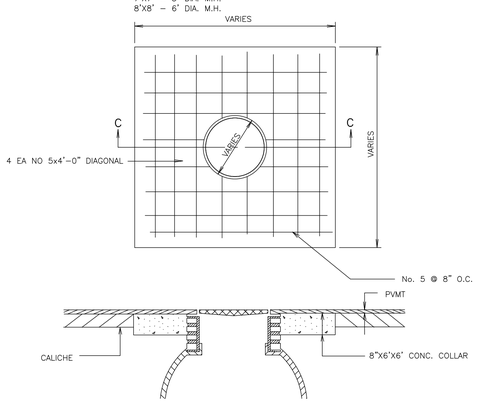

TYPICAL FIBERGLASS MANHOLE IN PAVEMENT SECTION C–C

NOT TO SCALE

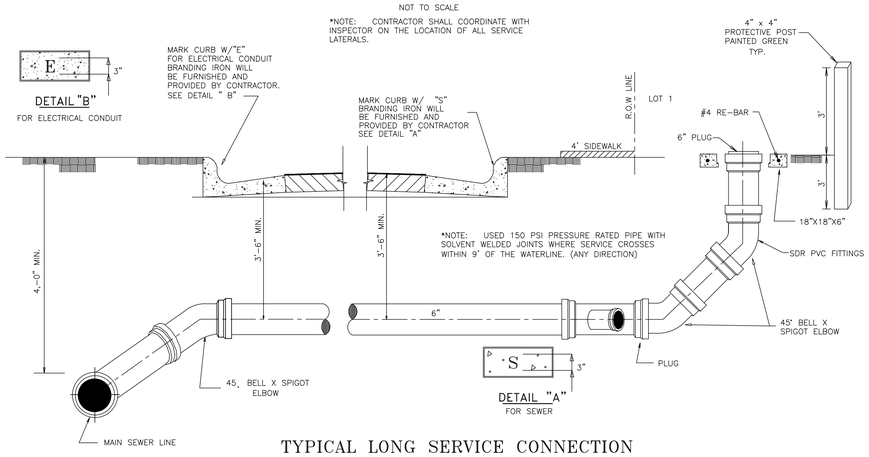

TYPICAL LONG SERVICE CONNECTION WITH STANDARD CLEANOUT

NOT TO SCALE

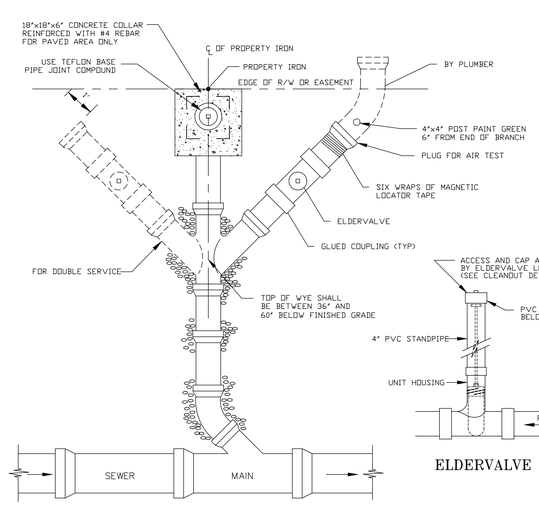

SEWER SERVICE WITH ELDERVALVE

(USE ONLY FOR SEWER SERVICE WHERE BPUB DOES NOT PROVIDE THE WATER SERVICE)

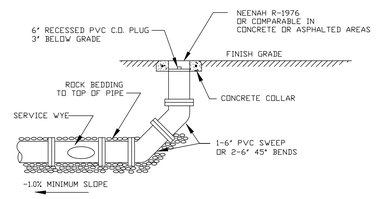

CLEANOUT IN PAVEMENT

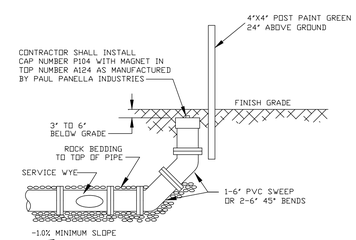

CLEANOUT IN LANDSCAPED AREA

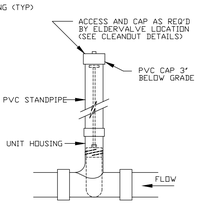

ELDERVALVE

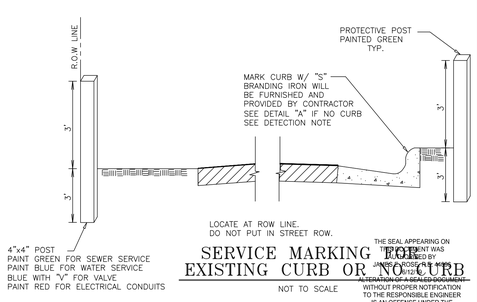

SERVICE MARKING FOR EXISTING CURB OR NO CURB

NOT TO SCALE

THE SEAL APPEARING ON THIS DOCUMENT WAS AUTHORIZED BY JAMES E. ROSE, P.E. ON 10-15-19. ALTERATION OF A SEALED DOCUMENT WITHOUT PROPER NOTIFICATION TO THE RESPONSIBLE ENGINEER IS AN OFFENSE UNDER THE TEXAS ENGINEERING PRACTICE LAW

NOTE:
THE ENGINEER/CONTRACTOR SHALL PROVIDE BPUB WITH "CUT-SHEETS" PRIOR TO APPROVAL FOR BEGINNING CONSTRUCTION PROJECTS. THE "CUT-SHEETS" WILL BE USED TO VERIFY PIPE ELEVATIONS.

Mejia & Rose, Incorporated
Engineering Surveying
T.B.P.E. Reg. No. F-2670
T.B.P.L.S. Reg. No 10023900
1643 West Price Road (956) 544-3022
P.O. Box 3761 Brownsville, Texas 78520
Fax (956) 544-3068

SANITARY SEWER LINE DETAILS

No.	REVISIONS	BY

GMS ARCHITECTS
1150 Paredes Line Rd.
Brownsville TX 78526
(956) 546-0110
fax (956) 546-0196

BISD Hanna ECHS
Gymnasium Facility

STATE OF TEXAS
JAMES E. ROSE
44096
LICENSED
PROFESSIONAL ENGINEER

© Copyright 2018
Gomez Mendez Saenz Inc.
Architects-Planners
Interior Designers

Date:	June, 2019
Scale:	As Noted
Project Architect:	David Monreal, AIA
Drawn By:	
Job No:	BISD Hanna Gymnasium
Sheet:	C-5 OF C-7

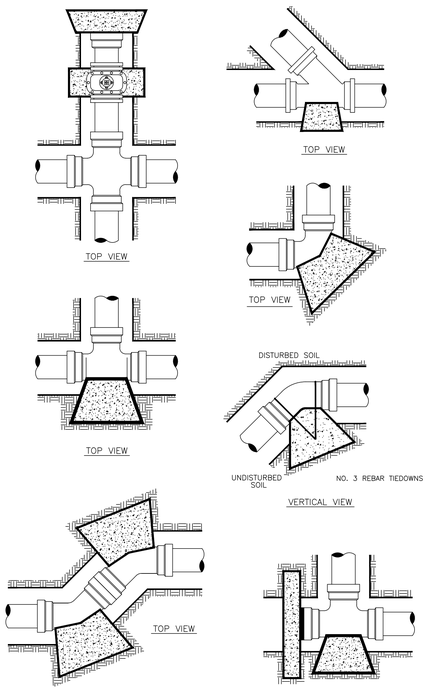

THRUST BLOCK DETAILS

NOT TO SCALE

ALL MJ FITTINGS WILL REQUIRE RESTRAINERS (MEGA LUGS) WITH THRUST BLOCKS

NOTES ON THRUST BLOCKING

1. ALL BLOCKING SHALL BE AGAINST UNDISTURBED HAND DUG SOIL AND SHALL BE CONCRETE HAVING A MINIMUM 28 DAY STRENGTH OF 2000 LBS. PER SQUARE INCH.

2. THRUST CALCULATIONS TO BE BASED ON THRUST DUE TO WATER PRESSURE AT 100% OF TEST PRESSURE. THRUST = 2 AP SIN 1/2Ø WHERE A = AREA OF PIPE, P = WATER PRESSURE, Ø = DEFLECTION ANGLE.

3. VERTICAL UPLIFT BLOCKS SHALL BE DESIGNED ON THE BASIS OF 150 LBS. PER CU. FT. FOR CONCRETE AND SOIL AT 120 LBS. PER CU. FT. OVER THE AREAOF BLOCK.

4. VERTICAL DOWN THRUST BLOCKS SHALL BE DESIGNED ON THE BASIS OF 2000 LBS. PER SQ. FT. ALLOWABLE SOIL BEARING PRESSURE. DIMENSION MAY BE DECREASED WITH APPROVAL OF THE ENGINEER IF MEASURED SOIL CONDITIONS PERMIT. IN POOR SOIL CONDITIONS, BLOCK DIMEMSIONS SHALL BE INCREASED IN PROPORTION TO ALLOWABLE BEARING VALUE.

5. THRUST BLOCKS ON HORIZONTAL BENDS, TEES, CROSSES, AND REDUCERS SHALL BE SIZED BASED ON 24000 LBS. PER SQ. FT. OF BLOCKING SURFACE AREA IN CONTACT WITH UNDISTURBED SOIL. BLOCK DIMENSIONS MAY BE DECREASED WITH APPROVAL OF THE ENGINEER IF MEASURED SOIL CONDITIONS PERMIT. IN POOR SOIL CONDITIONS, BLOCK DIMENSIONS SHALL BE INCREASED IN PROPOERTION TO THE ALLOWABLE BEARING VALUE.

6. ALL BLOCKING SHALL HAVE A MINUMUM SOIL COVER OF 1 FT.

7. ADDITIONAL REINFORCING MAY BE REQUIRED FOR HORIZONTAL BLOCKING TO HANDLE UNUSUAL SHEAR LOADING CONDITIONS.

GENERAL DATA FOR BLOCKING STANDARD FITTING

PIPE SIZE	THRUST IN TONS EXERTED AT PLUGS, TEES AND BENDS FOR EACH 100 LBS. PER SQ. IN. OF TEST PRESSURE.					
	PLUG	TEE	90° BEND	45° BEND	22-1/2° BEND	11-1/4° BEND
4"	0.63	0.63	0.89	0.48	0.25	0.12
6"	1.40	1.40	2.00	1.08	0.55	0.28
8"	2.50	2.50	3.55	1.92	0.98	0.49
10"	3.93	3.93	5.55	3.00	1.53	0.77
12"	5.65	5.65	8.00	4.33	2.21	1.11
14"	7.70	7.70	10.88	5.89	3.00	1.51
16"	10.05	10.05	14.21	7.69	3.85	1.97
18"	12.70	12.70	17.99	9.74	4.96	2.49
20"	15.71	15.71	22.22	12.02	6.13	3.08
24"	22.67	22.67	32.00	17.31	8.83	4.43
27"	28.63	28.63	40.48	21.91	11.17	5.61
30"	35.35	35.35	50.00	27.08	13.79	6.93
36"	50.90	50.90	72.98	38.95	19.89	9.98
42"	69.27	69.27	97.97	53.02	27.03	13.58
48"	90.48	90.48	127.96	69.25	35.30	17.74
54"	114.51	114.51	161.94	87.64	44.68	22.45

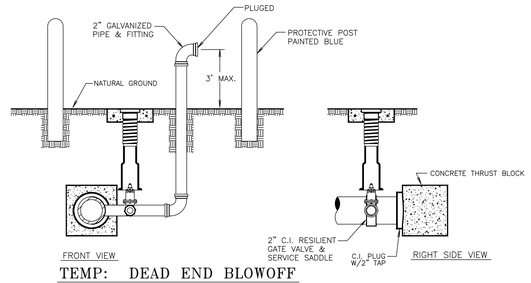

TEMP: DEAD END BLOWOFF

NOT TO SCALE

NOTE

1. A BLOWOFF TAP, AS SHOWN ON THE DETAIL HEREON SHALL BE PROVIDED AT ALL DEAD ENDS FOR RELEASING TRAPPED AIR TO AID IN FLUSHING, AND FOR SAMPLING FOR TESTING.

2. CONCRETE THRUST BLOCKS SHALL BE REQUIRED AT PLUGS, AS WELL AS AT ALL OTHER LOCATIONS AS NOTED HEREON.

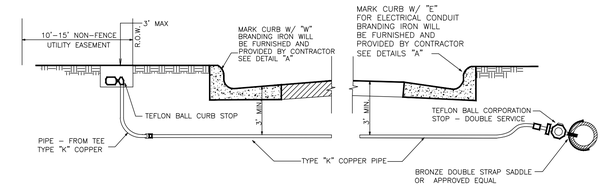

TYPICAL LONG SERVICE

NOT TO SCALE

NOTE:
1. USE 3/4" TYPE "K" COPPER PIPE FOR SINGLE SERVICE CONNECTION
2. 36" MIN. COVER FOR 3/4" THRU 2" SERVICES
3. MARK CURB W/"V" AT WATER VALVE LOCATIONS, BRANDING IRON WILL BE FURNISHED AND PROVIDED BY CONTRACTOR

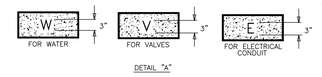

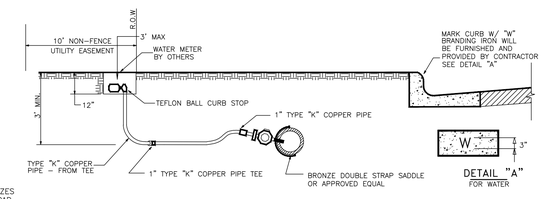

TYPICAL SHORT SERVICE

NOT TO SCALE

NOTE:
1. USE 3/4" TYPE "K" COPPER PIPE FOR SINGLE SERVICE CONNECTION

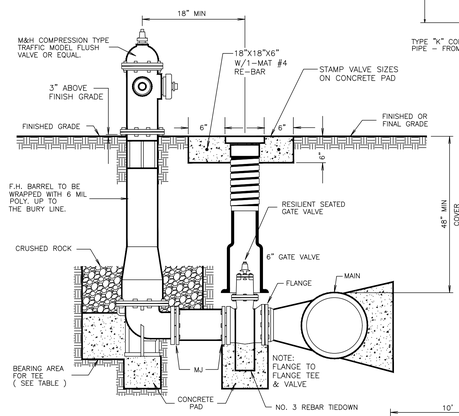

FIRE HYDRANT

NOT TO SCALE

VALVE & BOX

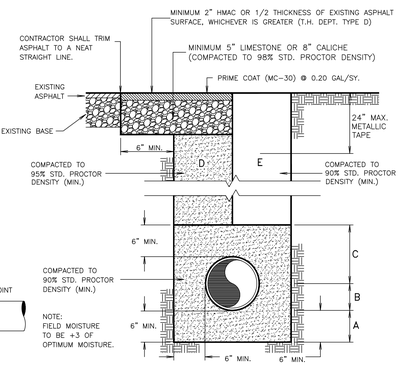

TYPICAL PIPE BEDDING AND TRENCH BACKFILL DETAIL

NOT TO SCALE

A SAND BEDDING PLACED BEFORE PIPE IS LAID UP TO FLOW LINE OF PIPE (MIN. THICKNESS = 6").

B SAND BACKFILL PLACED AFTER PIPE IS LAID FROM BOTTOM OF PIPE TO SPRING LINE OF PIPE (4" LIFTS, HAND TAMPED).

C SAND BACKFILL PLACED FROM SPRING LINE OF PIPE TO 6" ABOVE TOP OF PIPE (6" LIFTS, HAND TAMPED).

D SAND BACKFILL, CLASS "A" (6" LIFTS, MECHANICAL COMPACTION).

E EARTH BACKFILL, CLASS "B" (12" LIFTS, MECHANICAL COMPACTION).

FOUNDATION PREPARATION (WELLPOINTS, GRAVEL OR CEMENT STABILIZATION, OR APPROVED SUBSTITUTE) SHALL BE REQUIRED WHEN TRENCH BOTTOM IS UNSTABLE.

BACKFILLING AT STRUCTURES SHALL BE PLACED IN UNIFORM LAYERS, MOISTENED AS REQUIRED TO APPROXIMATE OPTIMUM MOISTURE CONTENT, AND COMPACTED TO 95% STD. PROCTOR DENSITY. THE THICKNESS OF EACH LOOSE LAYER SHALL NOT EXCEED 6". STRUCTURE BACKFILL MATERIAL SHALL BE SAND, APPROVED SITE SOIL, OR OTHER APPROVED SUBSTITUTE.

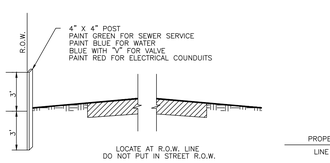

SERVICE MARKING FOR NO CURB

NOT TO SCALE

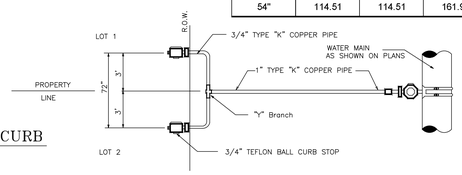

TYPICAL DOUBLE SERVICE CONNECTION

NOT TO SCALE

NOTE:
1. USE 3/4" TYPE "K" COPPER PIPE FOR SINGLE SERVICE CONNECTION.
2. USE SERVICE CLAMP OR FACTORY THREADED COUPLING FOR 1" SERVICE CONNECTIONS.
3. SERVICES SHALL BE INSTALLED ACCORDING TO STANDARD PIPE BEDDING DETAIL.

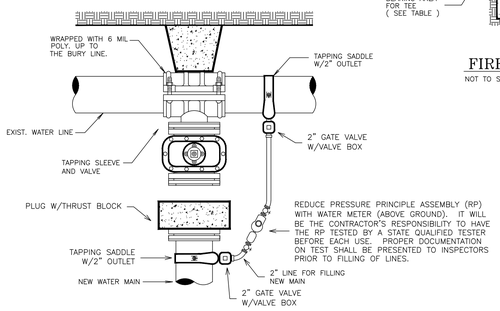

METHOD FOR FILLING AND FLUSHING NEW WATER LINES

NOT TO SCALE

NOTE:

WATER USAGE FOR ALL INITIAL TESTING WILL NOT BE BILLED TO THE CONTRACTOR. ANY RE-TESTING NEEDED WILL BE THE RESPONSIBILITY OF THE CONTRACTOR INCLUDING PAYMENT OF ADDITIONAL WATER NEEDED. CONTRACTOR WILL BE ALLOWED TO FLUSH THE WATERLINE INITIALLY FOR A MAXIMUM OF 12-24 HRS. OR AS DETERMINED BY THE ENGINEER. IF FLUSHING IS DETERMINED TO BE LONGER, THE ENGINEER WILL BE REQUIRED TO SUPPLY THE PROPER DOCUMENTATION AND CALCULATIONS TO SUPPORT SUCH FINDINGS.

AMOUNT OF FLOW TO BE USED FOR FLUSHING WILL BE MONITORED AND REGULATED BY THE BPUB INSPECTORS. CONTRACTOR WILL NOT BE ALLOWED TO TIE-IN TO EXISTING WATER LINE UNTIL ALL TEST ON NEW LINES HAVE BEEN COMPLETED AND APPROVED.

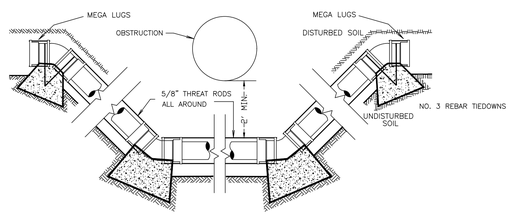

ADJUSTMENTS

NOT TO SCALE

SPECIAL CONDITION LINE ADJUSTMENTS
5/8" GALV. ALL THREAT RODS WITH EYELET BOLTS FOR ASSEMBLY WITH THRUST BLOCKS

STEEL CASING WALL THICKNESS CHART	
MINIMUM THICKNESS	DIAMETER OF CASING PIPE
1/4"	12" OR LESS
5/16"	OVER 12"-18"
3/8"	OVER 18"-22"
7/16"	OVER 22"-28"
1/2"	OVER 28"-34"
9/16"	OVER 34"-42"
5/8"	OVER 42"-48"
OVER 48" MUST BE APPROVED BY B.P.U.B.	
NOTE: THIS CHART IS ONLY FOR SMOOTH STEEL CASING PIPES WITH MINIMUM YIELD STRENGTH OF 35,000 PSI	

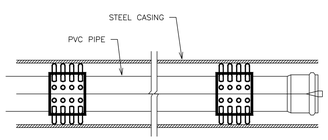

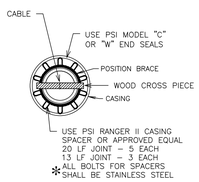

PVC PIPE CASING & SKIDS

NOT TO SCALE

NOMINAL PIPE SIZE	CASING SIZE	NO. OF SKIDS
6"	12"	4
8"	16"	4
12"	20"	4
16"	24"	5

No.	REVISIONS	BY

GMS ARCHITECTS
1150 Paredes Line Rd.
Brownsville TX 78526
(956) 546-0110
fax (956) 546-0196

BISD Hanna ECHS
Gymnasium Facility

THE SEAL APPEARING ON THIS DOCUMENT WAS AUTHORIZED BY JAMES E. ROSE, P.E. 44096 6/12/19
ALTERATION OF A SEALED DOCUMENT WITHOUT PROPER NOTIFICATION TO THE RESPONSIBLE ENGINEER IS AN OFFENSE UNDER THE TEXAS ENGINEERING PRACTICE LAW

STATE OF TEXAS
JAMES E. ROSE
44096
LICENSED PROFESSIONAL ENGINEER

© Copyright 2018
Gomez Mendez Saenz Inc.
Architects-Planners
Interior Designers

Date: June, 2019
Scale: As Noted
Project Architect: David Monreal, AIA
Drawn By:
Job No. BISD Hanna Gymnasium
Sheet: C-6 OF C-7

Mejia & Rose, Incorporated
Engineering Surveying
T.B.P.E. Reg. No. F-2670
T.B.P.L.S. Reg. No 10023900
1643 West Price Road (956) 544-3022
P.O. Box 3761 Brownsville, Texas 78520
Fax (956) 544-3068

WATER LINE DETAILS

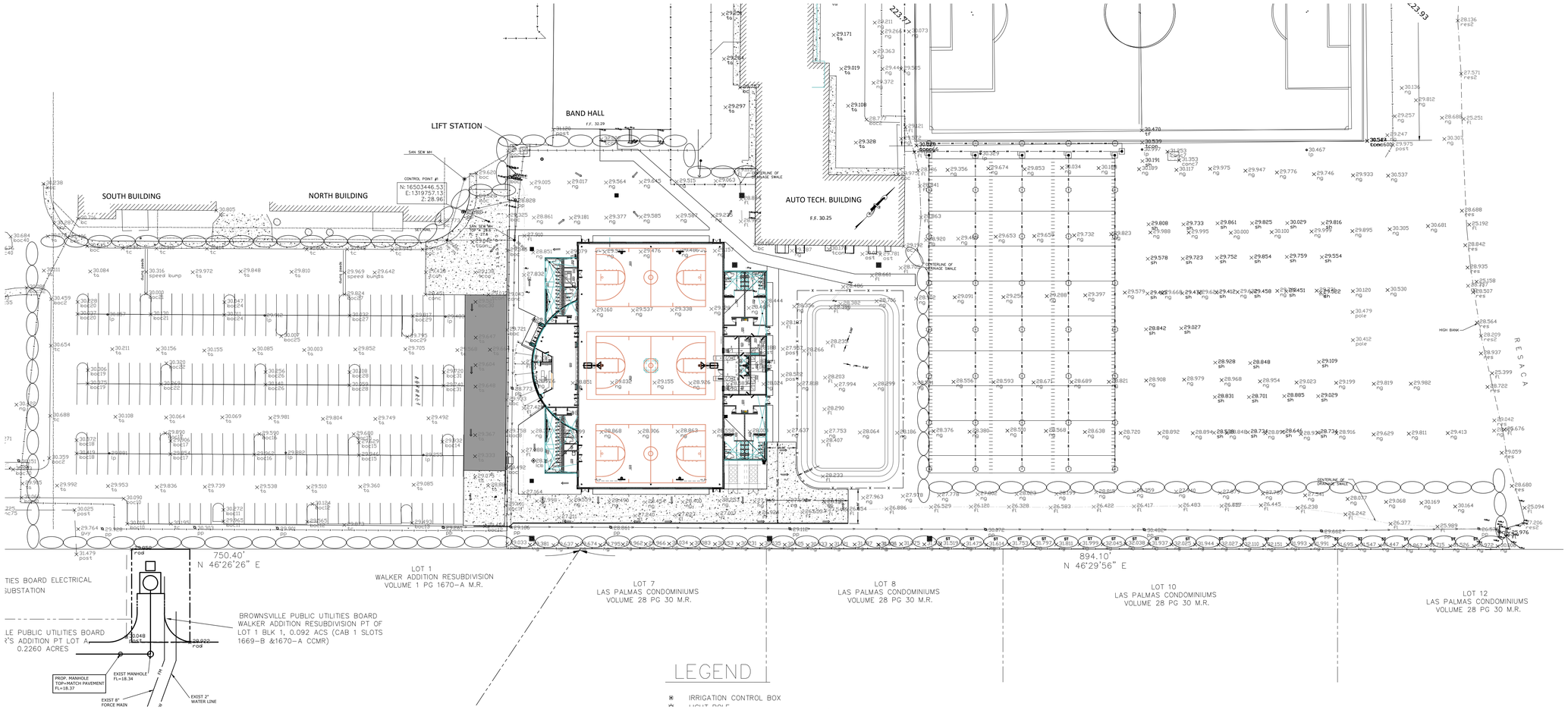

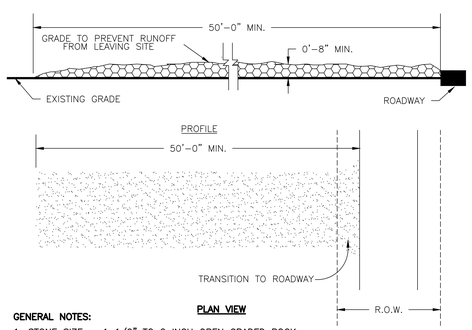

GENERAL NOTES:

1. STONE SIZE – 1 1/2" TO 2 INCH OPEN GRADED ROCK.
2. LENGTH – AS EFFECTIVE, BUT NOT LESS THAN 50 FEET.
3. THICKNESS – NOT LESS THAN 8 INCHES.
4. WIDTH – NOT LESS THAN FULL WIDTH OF ALL POINTS OF INGRESS OR EGRESS.
5. WASHING – WHEN NECESSARY, WHEELS SHALL BE CLEANED TO REMOVE SEDIMENT PRIOR TO ENTRANCE ONTO PUBLIC ROADWAY. WHEN WASHING IS REQUIRED, IT SHALL BE DONE ON AN AREA STABILIZED WITH CRUSHED STONE WHICH DRAINS INTO AN APPROVED TRAP OR SEDIMENT BASIN. ALL SEDIMENT SHALL BE PREVENTED FROM ENTERING ANY STORM DRAIN, DITCH, OR WATERCOURSE USING APPROVED METHODS.
6. MAINTENANCE – THE ENTRANCE SHALL BE MAINTAINED IN A CONDITION WHICH WILL PREVENT TRACKING OR FLOWING OF SEDIMENT ONTO PUBLIC ROADWAYS. THIS MAY REQUIRE PERIODIC TOP DRESSING WITH ADDITIONAL STONE AS CONDITIONS DEMAND, AND REPAIR AND/OR CLEANOUT OF ANY MEASURES USED TO TRAP SEDIMENT. ALL SEDIMENT SPILLED, DROPPED WASHED, OR TRACKED ONTO PUBLIC ROADWAY MUST BE REMOVED IMMEDIATELY.
7. DRAINAGE – ENTRANCE MUST BE PROPERLY GRADED OR INCORPORATE A DRAINAGE SWALE TO PREVENT RUNOFF FROM LEAVING THE CONSTRUCTION SITE.

1 STABILIZED CONSTRUCTION ENTRANCE DETAIL

N.T.S.

MAY NOT BE NECESSARY IF EXISTING PAVED ENTRANCES ARE USED SUBJECT TO NOTES NO. 5 AND NO. 6

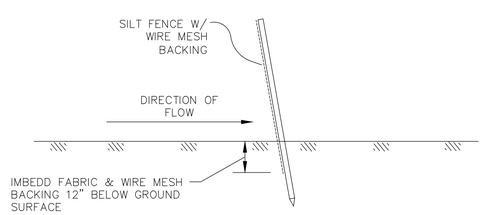

2 SILT FENCE INSTALLATION

N.T.S.

TO BE INSTALLED WHEREVER THERE IS POTENTIAL FOR RUNOFF TO LEAVE SITE OR ENTER DRAINAGE SYSTEM.

LEGEND	
	24" HIGH SILT FENCE

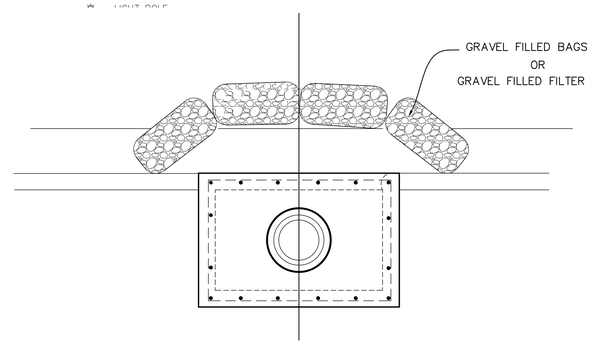

PLAN

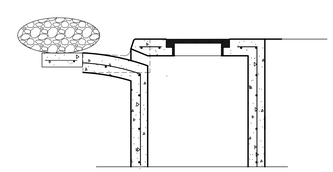

SECTION A

3 GRAVEL FILLED BAGS AT INLETS

LEGEND

IRRIGATION CONTROL BOX

CONTRACTOR'S RESPONSIBILITY FOR PREPARATION AND IMPLEMENTATION OF STORMWATER POLLUTION PREVENTION PLAN

1. IT IS THE INTENT OF THE INFORMATION PROVIDED WITHIN THESE SPECIFICATIONS TO BE USED BY THE CONTRACTOR AS THE GENERAL GUIDELINES OF THE **STORM WATER POLLUTION PREVENTION PLAN** FOR THIS PROJECT TO ESTABLISH A MINIMUM BASIS OF COMPLIANCE WITH THE FEDERAL REGULATIONS.
2. THE CONTRACTOR'S **STORM WATER POLLUTION PREVENTION PLAN** SHOULD ADDRESS THREE GOALS:
   A. DIVERSION OF UPSLOPE WATER AROUND DISTURBED AREAS OF THE SITE;
   B. LIMITS THE EXPOSURE OF DISTURBED AREAS TO THE SHORTEST DURATION POSSIBLE; AND
   C. REMOVAL OF SEDIMENT FROM STORM WATER BEFORE IT LEAVES THE SITE.
3. ✳ IF AREA OF THE PROJECT REQUIRES, THE CONTRACTOR SHALL PREPARE AND FILE TO THE TEXAS COMMISSION ON ENVIRONMENTAL QUALITY STORM WATER & GENERAL PERMITS TEAM (TCEQ) NOTICE OF INTENT (NOI) FORMS BEFORE (SEVEN DAYS IF BY MAIL–24 HOURS IF ON LINE) BEGINNING ANY CONSTRUCTION.
4. THE CONTRACTOR SHALL MAKE THE **STORM WATER POLLUTION PREVENTION PLAN** AVAILABLE, UPON REQUEST, TO TCEQ.
5. THE CONTRACTOR MUST AMEND PLANS WHENEVER THERE IS A CHANGE IN DESIGN, CONSTRUCTION, OPERATION, OR MAINTENANCE OF THE PLAN, OR WHEN THE EXISTING PLAN PROVE INEFFECTIVE. MODIFICATIONS INCLUDING DESIGN AND ALL ADDITIONAL MATERIALS AND WORK, SHALL BE ACCOMPLISHED BY THE CONTRACTOR AT NO ADDITIONAL EXPENSE TO THE OWNER.
6. STABILIZATION MEASURES ARE TO BE INSPECTED AT A MINIMUM OF ONCE EVERY 14 DAYS AND WITHIN 24 HOURS AFTER ANY STORM EVENT GREATER THAN 0.5 INCHES. REPAIRS AND INADEQUACIES REVEALED BY THE INSPECTION MUST BE REMEDIED WITHIN 7 CALENDAR DAYS.
7. ALL INSPECTION REPORTS SUMMARIZING INSPECTION ACTIVITIES, REMEDIAL ACTION TAKEN, AND ACTUAL IMPLEMENTATION OF THE **STORM WATER POLLUTION PREVENTION PLAN** SHALL BE RETAINED AND MADE PART OF THE PLAN.
8. ALL CONTRACTORS AND SUBCONTRACTORS IDENTIFIED IN THE PLAN MUST CERTIFY AS TO AN UNDERSTANDING OF THE TPDES GENERAL PERMIT BEFORE CONDUCTING ANY ACTIVITY IDENTIFIED IN THE **STORM WATER POLLUTION PREVENTION PLAN.**
9. THE CONTRACTOR SHALL ADOPT APPROPRIATE CONSTRUCTION SITE MANAGEMENT PRATICES TO PREVENT THE DISCHARGE OF OILS, GREASE, PAINTS, GASOLINE, AND OTHER POLLUTANTS TO STORM WATER. APPROPRIATE PRACTICES CAN INCLUDE:
   – DESIGNATED AREAS FOR EQUIPMENT MAINTENANCE AND REPAIR;
   – REGULAR COLLECTION OF WASTE;
   – CONVENIENTLY LOCATED WATER RECEPTACLES; AND
   – DESIGNATING AND CONTROLING EQUIPMENT WASH–DOWN.
10. THE CONTRACTOR SHALL AMEND OR MODIFY THIS PLAN AS REQUIRED BY CONSTRUCTION MEANS, METHODS AND SEQUENCE. MODIFICATIONS SHALL NOT COMPROMISE THE INTENT OF THE REQUIREMENTS OF THE LAW OR THE PLANS. MODIFICATIONS SHALL NOT BE BASIS FOR ADDITIONAL COST TO THE OWNER.
11. THE CONTRACTOR SHALL CONSTRUCT A STABILIZED CONSTRUCTION ENTRANCE AT ALL TRAFFIC ENTRANCE/EXIT POINTS PRIOR TO EXITING ONTO AND PAVED ROADWAYS. (SEE DETAIL 1.)
12. THE CONTRACTOR SHALL PROTECT ALL POTENTIAL POINTS OF DISCHARGE OF RUNOFF (INLETS, GUTTERS, SWALES AND UNVEGETATED RESACA BANK AREAS) WITH SILT FENCING HAY BALES, GRAVEL FILLED BAGS AS SHOWN ON DETAILS 2, 3, AND 4 OR EQUIVALENT MEANS APPROVED BY ENGINEER.
13. FINAL STABILIZATION SHALL BE ACCOMPLISHED BY INSTALLING A 2 FEET WIDE STRIP OF SOD BEHIND CURB OR SIDEWALK AS SHOWN IN DETAIL NO. 5. CONTRACTOR SHALL WATER THE SOD IMMEDIATELY AFTER INSTALLATION AND 3 TIMES PER WEEK FOR 2 WEEKS AFTER INSTALLATION.

✳ ***NOTE:*** ***THE TOTAL AREA OF THIS PROJECT IS LESS THAN 5 ACRES THEREFORE, THE FILING OF NOTICE OF INTENT (NOI) AND NOTICE OF TERMINATION (NOT) IS NOT REQUIRED. ALL OTHER REQUIREMENTS SHALL APPLY.***

THE SEAL APPEARING ON THIS DOCUMENT WAS AUTHORIZED BY JAMES E. ROSE, P.E. 44096
8/12/19
ALTERATION OF A SEALED DOCUMENT WITHOUT PROPER NOTIFICATION TO THE RESPONSIBLE ENGINEER IS AN OFFENSE UNDER THE TEXAS ENGINEERING PRACTICE LAW

STATE OF TEXAS
JAMES E. ROSE
44096
LICENSED
PROFESSIONAL ENGINEER

Mejia & Rose, Incorporated
Engineering *Surveying*
T.B.P.E. Reg. No. F–2670
T.B.P.L.S. Reg. No 10023900
1643 West Price Road (956) 544–3022
P.O. Box 3761 Brownsville, Texas 78520
Fax (956) 544–3068

STORM WATER POLLUTION PREVENTION PLAN REQUIREMENTS

No.	REVISIONS	BY

GMS ARCHITECTS
1150 Paredes Line Rd.
Brownsville TX 78526
(956) 546-0110
fax (956) 546-0196

BISD Hanna ECHS
Gymnasium Facility

© Copyright 2018
Gomez Mendez Saenz Inc.
Architects-Planners
Interior Designers

Date:	June, 2019
Scale:	As Noted
Project Architect:	David Monreal, AIA
Drawn By:	
Job No.	BISD Hanna Gymnasium
Sheet:	C-7 OF C-7

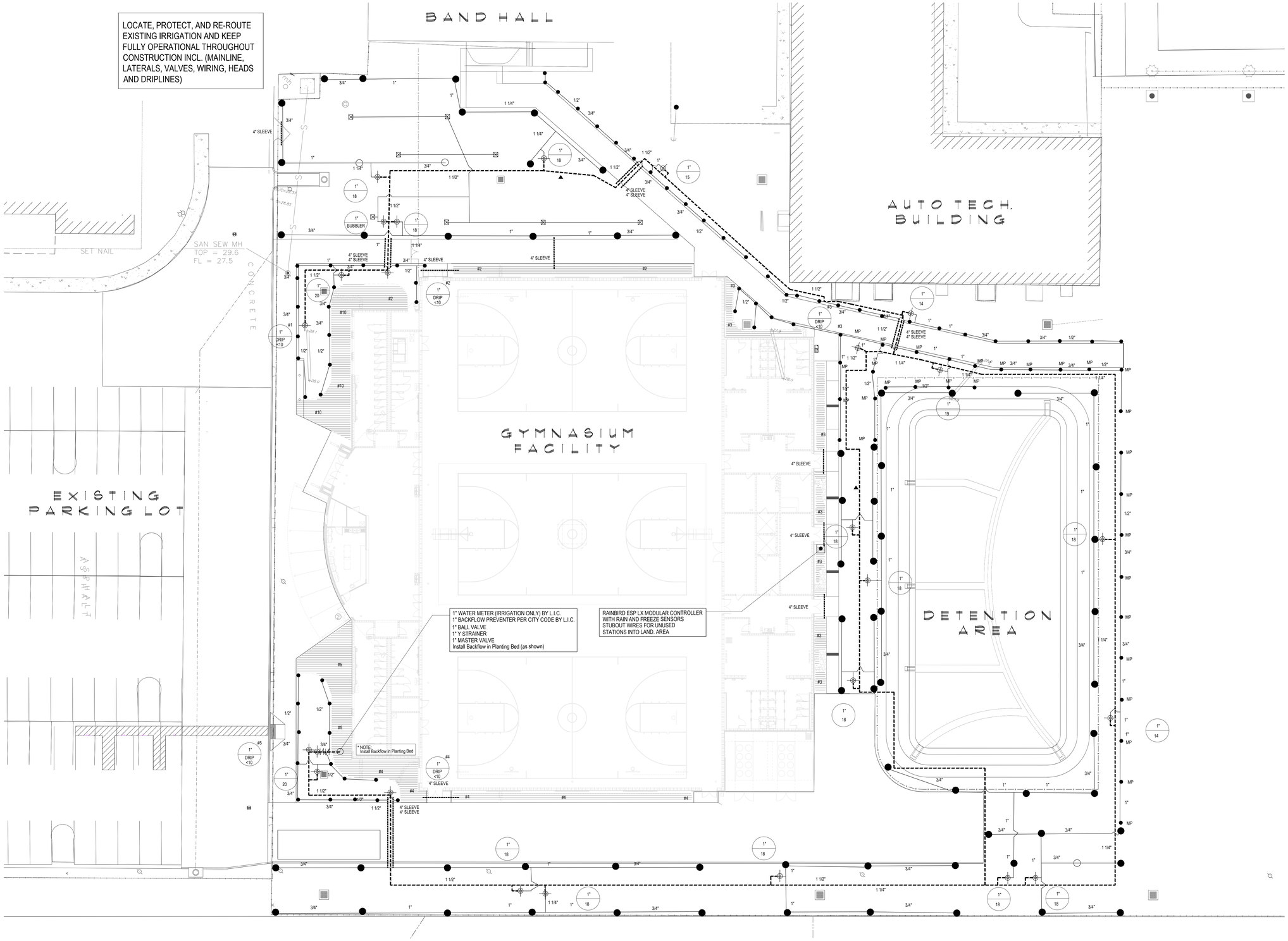

IRRIGATION LEGEND

MP ●	RAINBIRD R-VAN SERIES ROTARY NOZZLE
⊠	RAINBIRD 1404 BUBBLER HEAD
●	RAINBIRD 5000 PC
○	RAINBIRD 5000 FC
	RAINBIRD PEB SERIES ELECTRIC VALVE
▲	RAINBIRD □UICK COUPLER VALVE (33-DLRC)
	CONTROLLER (ESP-LX) RAINBIRD WIRELESS RAIN/FREEZE SENSOR
	WATER METER (AS SIZED)
	BACKFLOW PREVENTER (AS SIZED)
	CLASS 200 PVC LATERAL PIPING
	CLASS 200 PVC MAINLINE
	SCH. 40 PVC SLEEVING (AS SIZED)
	VALVE SIZE
	GPM
DRIPLINE (BED)	RAINBIRD DRIPLINE XFS (18" LATERAL SPACING, 12" EMITER SPACING) XF SERIES TIE DOWN STAKES (TDS-050) □ 36" O.C. □ TWO ON EACH TEE/ELBOW PVC LATERAL PIPING SIZED AS RE□UIRED RAINBIRD DRIP CONTROL ZONE KIT SCZ-100-PRB-COM (EACH DRIP ZONE) 1" BALL VALVE WITH REGULATED PRESSURE AND 200 MESH FILTRATION (1) DRIP SYSTEM OPERATION INDICATOR (OPERIND) PER IRRIGATION ZONE

INSTALL ALL E□UIPMENT ACCORDING TO MANUFACTURERS SPECIFICATIONS.

SLEEVING NOTES

1. Irrigation Contractor shall supply and install sleeves and conduits at twenty-four (24") inches below finish grade of the top of pavement. Bore as re□uired.
2. Irrigation Contractor shall extend sleeves one (1') foot beyond edge of all pavement.
3. Irrigation Contractor shall cap pipe ends using PVC caps.
4. All sleeves shall be Schedule 40 PVC pipe.
5. ALL sleeves shall be bored under existing pavement.

IRRIGATION PLAN
SCALE: 1/16" = 1'-0"

No.	REVISIONS	BY

GMS ARCHITECTS
1150 Paredes Line Rd. Brownsville TX 78526
(956) 546-0110
fax (956) 546-0196

SSP Design
789 EAST WASHINGTON STREET
BROWNSVILLE, TEXAS 78520
TEL(956) 547-9788
FAX(956) 547-9977
SPAJESH@SSPDESIGN.COM

BISD Hanna ECHS
Gymnasium Facility

6/12/19

© Copyright 2018
Gomez Mendez Saenz Inc.
Architects-Planners
Interior Designers

Date: June 12, 2019
Scale: As Noted
Project Architect: David Monreal, AIA
Drawn By: YM
Job No. BISD Hanna Gymnasium
Sheet: L1.01

IRRIGATION LEGEND

Symbol	Description
MP●	RAINBIRD R-VAN SERIES ROTARY NOZZLE
⊠	RAINBIRD 1404 BUBBLER HEAD
●	RAINBIRD 5000 PC
○	RAINBIRD 5000 FC
⊕	RAINBIRD PEB SERIES ELECTRIC VALVE
▲	RAINBIRD QUICK COUPLER VALVE (33-DLRC)
⊡	CONTROLLER (ESP-LX) RAINBIRD WIRELESS RAIN/FREEZE SENSOR
	WATER METER (AS SIZED)
	BACKFLOW PREVENTER (AS SIZED)
———	CLASS 200 PVC LATERAL PIPING
– – –	CLASS 200 PVC MAINLINE
- - - - - -	SCH. 40 PVC SLEEVING (AS SIZED)
	VALVE SIZE GPM

DRIPLINE (BED)

RAINBIRD DRIPLINE XFS
(18" LATERAL SPACING, 12" EMITER SPACING)
XF SERIES TIE DOWN STAKES (TDS-050) @ 36" O.C. & TWO ON EACH TEE/ELBOW
PVC LATERAL PIPING SIZED AS REQUIRED
RAINBIRD DRIP CONTROL ZONE KIT XCZ-100-PRB-COM (EACH DRIP ZONE)
1" BALL VALVE WITH REGULATED PRESSURE AND 200 MESH FILTRATION
(1) DRIP SYSTEM OPERATION INDICATOR (OPERIND) PER IRRIGATION ZONE
INSTALL ALL EQUIPMENT ACCORDING TO MANUFACTURERS SPECIFICATIONS

XXX / RAIN — ALL VALVE BOXES SHALL BE RAINBIRD VB-STD OR APPROVED EQUAL
ALL VALVE BOXES SHALL HAVE FILTER FABRIC AND 4" OF GRAVEL AT BASE

IRRIGATION NOTES

1. All equipment numbers reference Rainbird equipment catalog unless otherwise indicated.
2. LAWN SPRAY HEADS are 1804 sam installed as per detail.
3. SHRUB SPRAY HEADS are 1812 sam installed as per detail.
4. ELECTRIC CONTROL VALVES shall be PEB installed as per detail shown. Size valves as shown on plans. Valves shall be installed in valve boxes large enough to permit manual operation, removal of solenoid and/or valve cover without any earth excavation.
5. AUTOMATIC CONTROLLER shall be installed at location shown. Power (120V) shall be located in a junction box within five feet (5') of controller location. Power supply and junction box to be provided by General Contractor.
6. All 24 volt valve wiring is to be UF 14 single conductor. All wire splices are to be permanent and waterproof.
7. SLEEVES shall be supplied and installed by Irrigation Contractor. Sleeve material shall be Schedule 40. Bore under existing pavement as required. Sizes as indicated on plans.
8. Ten days prior to start of construction, contractor shall verify static water pressure. If static pressure is less than 50 PSI, do not start work until notified to do so by SSP Design.
9. All mainline and lateral piping shall have a minimum of 12 inches of cover. All piping under paving shall have a minimum of 18 inches of cover.
10. The irrigation contractor shall coordinate installation of the system with the landscape contractor so that all plant material will be watered in accordance with the intent of the plans and specifications.
11. The irrigation contractor shall select the proper arc and radius for each nozzle to insure 100% and proper coverage of all lawn areas and plant material. All nozzles in parking lots and planting beds shall be low angle to minimize overspray on pavement surfaces. No water will be allowed to spray on building.
12. The irrigation contractor shall warranty all system components for a period of one year.
13. See specifications for further instructions and project requirements.

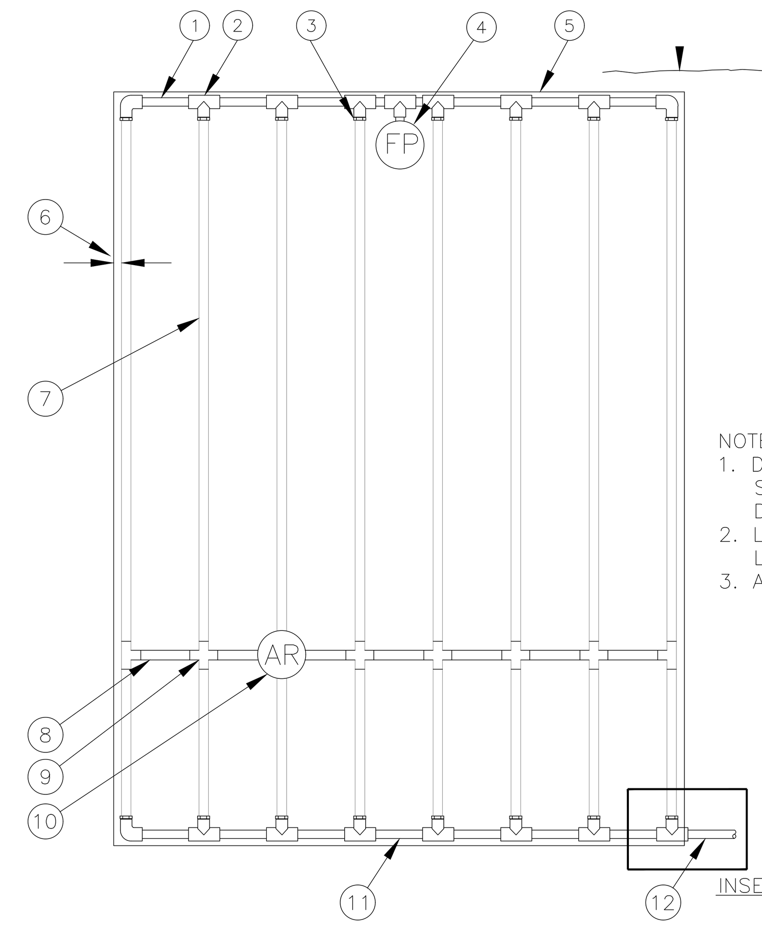

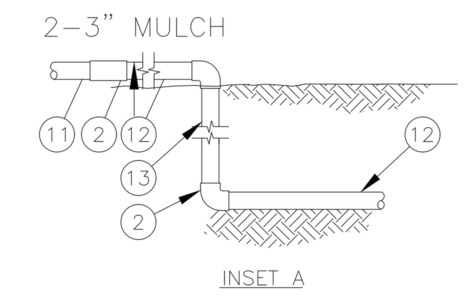

NOTES:
1. DISTANCE BETWEEN LATERAL ROWS AND EMITTER SPACING TO BE BASED ON SOIL TYPE, PLANT MATERIALS AND CHANGES IN ELEVATION. SEE RAIN BIRD XFS DRIPLINE INSTALLATION GUIDE FOR SUGGESTED SPACINGS.
2. LENGTH OF LONGEST DRIPLINE LATERAL SHOULD NOT EXCEED THE MAXIMUM LENGTH SHOWN IN THE ACCOMPANYING TABLE.
3. AIR RELIEF VALVE TO BE INSTALLED AT HIGH POINT OF AREA.

Inlet Pressure	XFS Dripline Maximum Lateral Lengths (Feet)					
	12" Spacing		18" Spacing		24" Spacing	
	Nominal Flow (GPH)		Nominal Flow (GPH)		Nominal Flow (GPH)	
psi	0.6	0.9	0.6	0.9	0.6	0.9
15	255	194	357	273	448	343
20	291	220	408	313	514	394
30	350	266	494	378	622	478
40	396	302	560	428	705	541
50	434	333	614	470	775	594

1. PVC EXHAUST HEADER
2. PVC SCH 40 TEE OR EL (TYPICAL)
3. BARB X MALE FITTING: RAIN BIRD XFD-MA FITTING (TYPICAL)
4. FLUSH POINT (TYPICAL) SEE RAIN BIRD DETAIL "XFS FLUSH POINT" OR "XFS FLUSH POINT WITH BALL VALVE"
5. PERIMETER OF AREA
6. PERIMETER DRIPLINE PIPE TO BE INSTALLED 2"-4" FROM PERIMETER OF AREA
7. SUB-SURFACE DRIPLINE: RAIN BIRD XF SERIES DRIPLINE (TYPICAL) POTABLE: XFS DRIPLINE NON-POTABLE: XFSP DRIPLINE
8. ½" POLYETHYLENE BLANK TUBING: RAIN BIRD XF SERIES BLANK TUBING
9. BARB X BARB INSERT TEE OR CROSS: RAIN BIRD XFD-TEE OR RAIN BIRD XFD-CROSS (TYPICAL)
10. AIR RELIEF VALVE: RAIN BIRD AR VALVE KIT SEE RAIN BIRD DETAIL "AIR RELIEF VALVE KIT"
11. PVC SUPPLY HEADER
12. PVC DRIP MANIFOLD FROM RAIN BIRD CONTROL ZONE VALVE KIT (SIZED TO MEET LATERAL FLOW DEMAND)
13. PVC SCH 40 RISER PIPE

4 IRRIGATION SYSTEMS
END FEED LAYOUT INST. N.T.S.

DESIGN PRESSURE 60 PSI
ELECTRICAL SPLICES AT EACH VALVE AND CONTROLLER ONLY.
IRRIGATION IN TEXAS IS REGULATED BY THE TEXAS COMMISSION ON ENVIRONMENTAL QUALITY (TCEQ) MC-178/ P.O.BOX 13087, AUSTIN, TX 78711-3087. TECQ'S WEBSITE IS: www.tceq.state.tx.us

BUBBLER PIPING CHART

NUMBER OF BUBBLERS	SIZE OF PIPE
1 - 5	½"
6 - 10	¾"
11 - 20	1"
21 - 30	1 ¼"
31 - 40	1 ½"

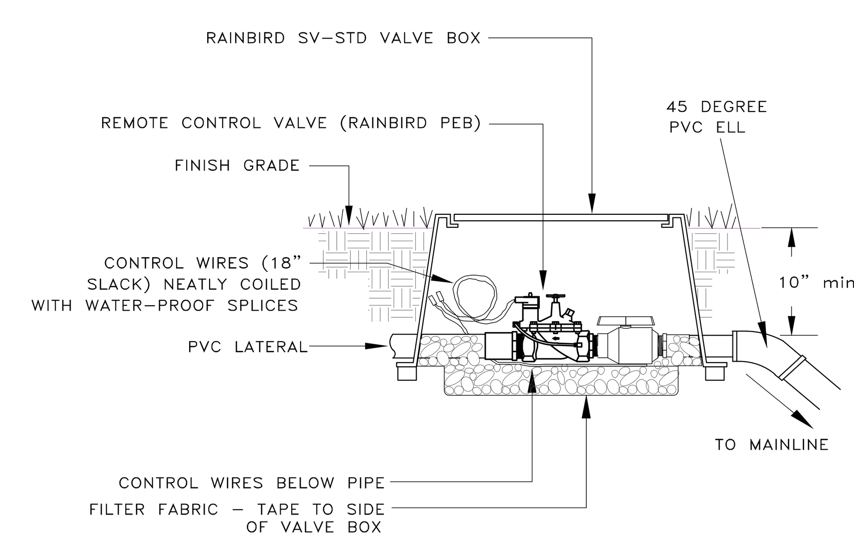

3 REMOTE CONTROL VALVE
NOT TO SCALE

ALL VALVE BOXES SHALL HAVE FILTER FABRIC AND 4" OF GRAVEL AT BASE

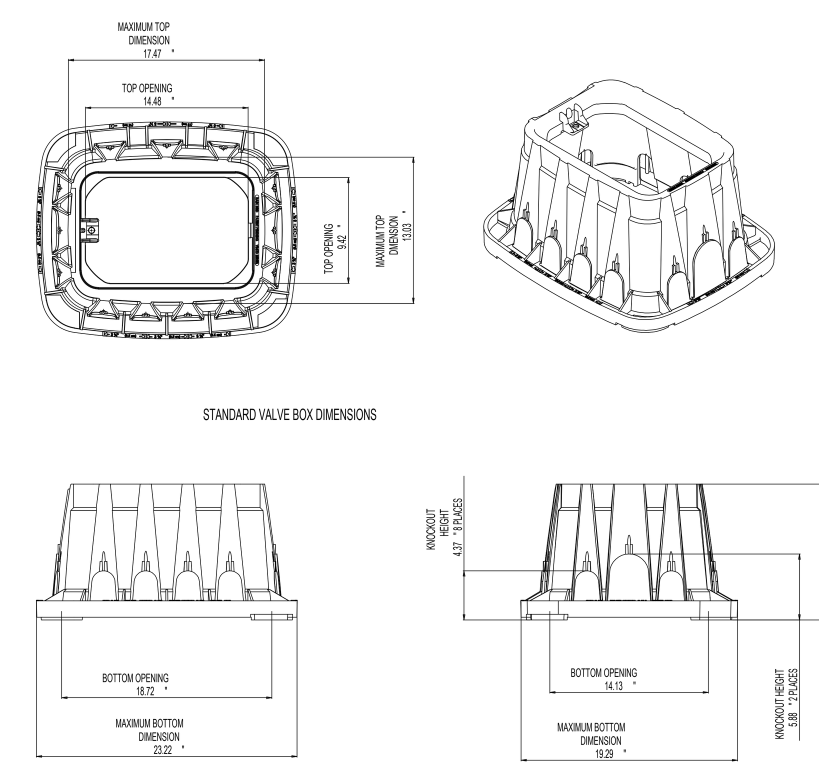

ALL VALVE BOXES SHALL BE RAINBIRD VB-STD OR APPROVED EQUAL
ALL VALVE BOXES SHALL HAVE FILTER FABRIC AND 4" OF GRAVEL AT BASE

5 VALVE BOX (VB-STD)
NOT TO SCALE

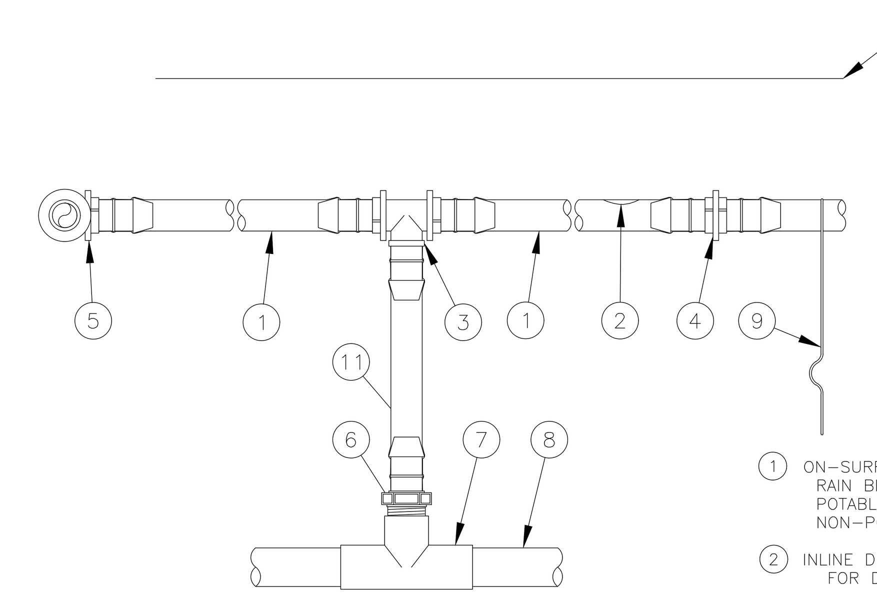

NOTES:
1. PLACE TIE DOWN STAKES EVERY THREE FEET IN SAND, FOUR FEET IN LOAM, AND FIVE FEET IN CLAY.
2. AT FITTINGS WHERE THERE IS A CHANGE OF DIRECTION SUCH AS TEES OR ELBOWS, USE TIE-DOWN STAKES ON EACH LEG OF THE CHANGE OF DIRECTION.
3. SAVE YOUR HANDS. USE THE RAIN BIRD FITTINGS-TOOL XF INSERTION TOOL FOR FITTING ASSEMBLY.

1. ON-SURFACE DRIPLINE: RAIN BIRD XF SERIES DRIPLINE POTABLE: XFS DRIPLINE NON-POTABLE: XFSP DRIPLINE
2. INLINE DRIP EMITTER OUTLET, SEE PLANS FOR DRIPLINE OUTLET SPACING.
3. BARB TEE 17x17x17mm RAIN BIRD XFF-TEE
4. BARB COUPLING 17x17mm RAIN BIRD XFF-COUP
5. BARB ELBOW 17x17mm RAIN BIRD XFF-ELBOW
6. BARB MALE ADAPTER 17mm X 1/2" MPT RAIN BIRD XFF-MA-050 17mm X 3/4" MPT RAIN BIRD XFF-MA-075
7. PVC TEE SxSxT
8. PVC LATERAL SUPPLY HEADER
9. TIE DOWN STAKE: RAIN BIRD TDS-050 WITH BEND (TYPICAL)
10. MULCH
11. RAIN BIRD XF SERIES BLANK TUBING LENGTH AS REQUIRED

6 IRRIGATION SYSTEMS
SUB-HEADER INST. N.T.S.

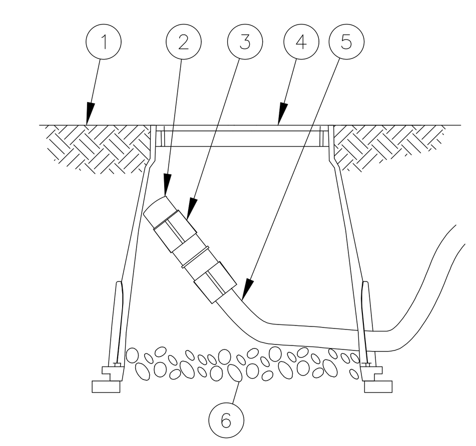

1. FINISH GRADE
2. FLUSH CAP FOR EASY FIT COMPRESSION FITTINGS: POTABLE: RAIN BIRD MDCFCAP NON-POTABLE: RAIN BIRD MDCFPCAP
3. EASY FIT COUPLING: RAIN BIRD MDCFCOUP
4. SUBTERRANEAN EMITTER BOX: RAIN BIRD SEB 7XB
5. SUB-SURFACE DRIPLINE: RAIN BIRD XF SERIES DRIPLINE POTABLE: XFS DRIPLINE NON-POTABLE: XFSP DRIPLINE
6. 3-INCH MINIMUM DEPTH OF 3/4-INCH WASHED GRAVEL WITH FILTER FABRICK AT BASE

NOTE:
1. ALLOW A MINIMUM OF 6-INCHES OF DRIPLINE TUBING IN VALVE BOX IN ORDER TO DIRECT FLUSHED WATER OUTSIDE VALVE BOX.

1 DRIPLINE
NOT TO SCALE

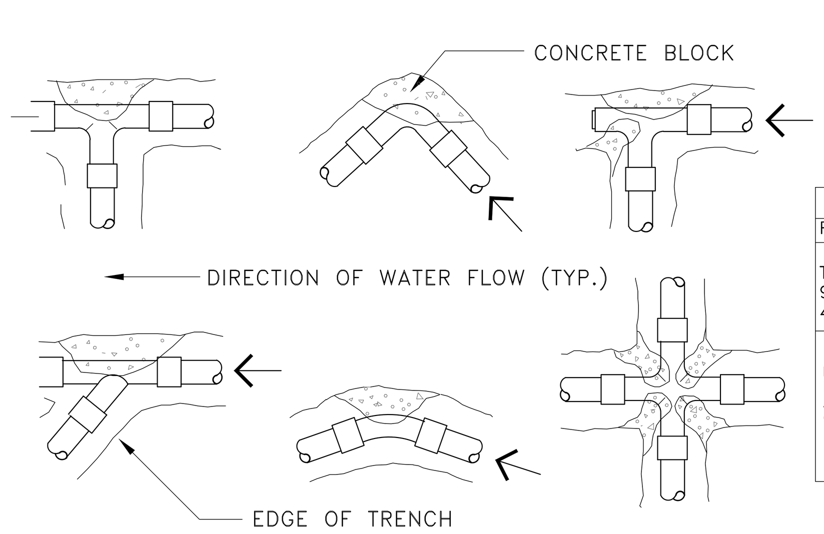

THRUST BLOCK BEARING AREA (SQ. FT.)				
PIPE SIZE	1 1/4" - 2 1/2"	3"	4"	6"
TEES/ELLS	1.00	1.00	1.25	3.2
90 BENDS	1.00	1.25	2.00	4.5
45 BENDS	1.00	1.00	1.00	2.4

NOTE:
INSTALL THRUST BLOCK AT ALL MAINLINE BENDS, TEES OR ELLS AS SHOWN BELOW. THRUST BLOCKS SHALL BE MINIMUM OF (1) CU. FT. REDI-MIX CONCRETE OR 2500 PSI 28 DAY CONCRETE.

2 THRUST BLOCK DETAIL
NOT TO SCALE

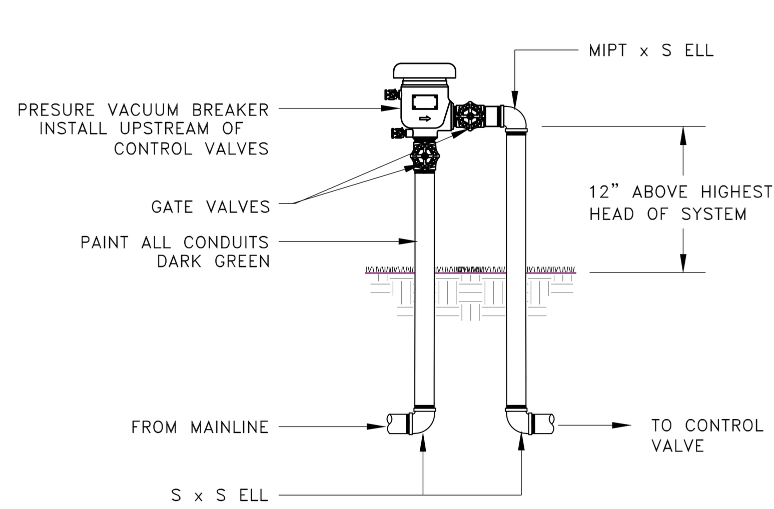

7 PRESSURE VACUUM BREAKER
NOT TO SCALE

NOTE: 1. KBI OR LASSCO SWING JOINT
2. INSTALL PART CIRCLE POP-UP HEADS 6" FROM EDGE OF PAVED AREAS.

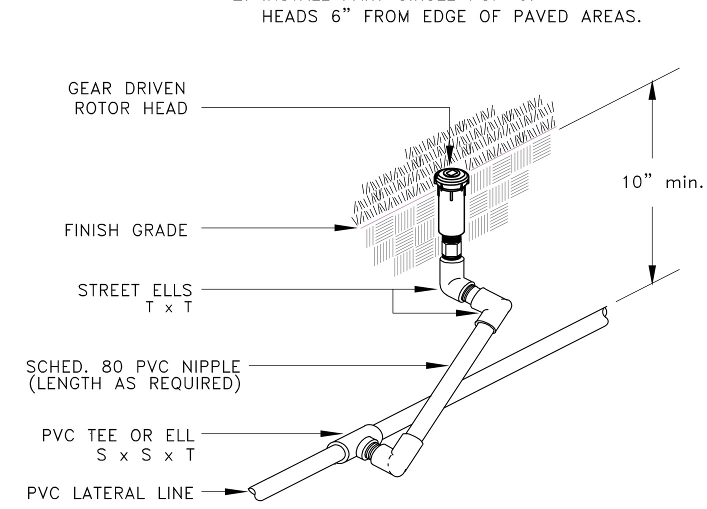

8 ROTOR POP-UP
NOT TO SCALE

NOTE 1. INSTALL PART CIRCLE POP-UP HEADS 6" FROM EDGE OF PAVED AREAS, UNLESS OTHERWISE NOTED.

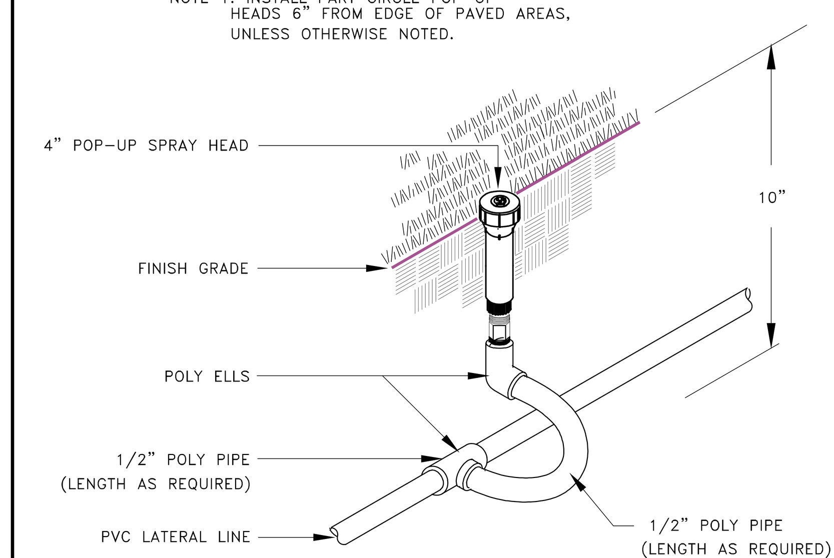

9 LAWN POP-UP HEAD
NOT TO SCALE

NOTE: INSTALL IRRIGATION CONTROLLER AT LOCATIONS SHOWN ON DRAWINGS AND ACCORDING TO MANUFACTURERS RECOMMENDATIONS

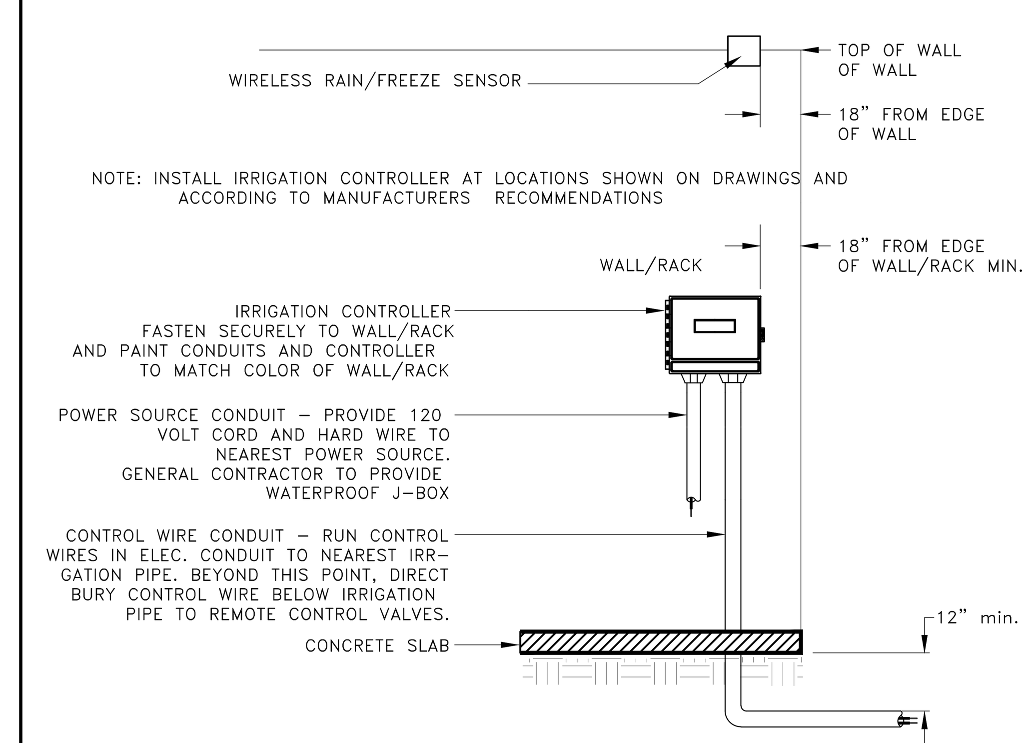

10 WALL/RACK MOUNTED CONTROLLER
NOT TO SCALE

No.	REVISIONS	BY

GMS ARCHITECTS
1150 Paredes Line Rd. Brownsville TX 78526
(956) 546-0110 fax (956) 546-0196

SSP Design

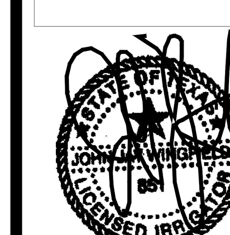

BISD Hanna ECHS
Gymnasium Facility

© Copyright 2018 Gomez Mendez Saenz Inc. Architects-Planners Interior Designers

Date:	June 12, 2019
Scale:	As Noted
Project Architect:	David Monreal, AIA
Drawn By:	
Job No.	BISD Hanna Gymnasium
Sheet:	L1.02

NOTE:

CONTRACTOR SHALL PROTECT EXISTING LANDSCAPE, IRRIGATION AND LAWNS. ANY DAMAGE CAUSED BY CONSTRUCTION ACTIVITY, LAY-DOWN/STORAGE AREAS, ETC. SHALL BE REPAIRED TO MATCH CONDITIONS PRIOR TO CONSTRUCTION. THIS MAY INCLUDE IRRIGATION REPAIRS, SODDING, SEEDING, PLANTING AND CLEANUP.

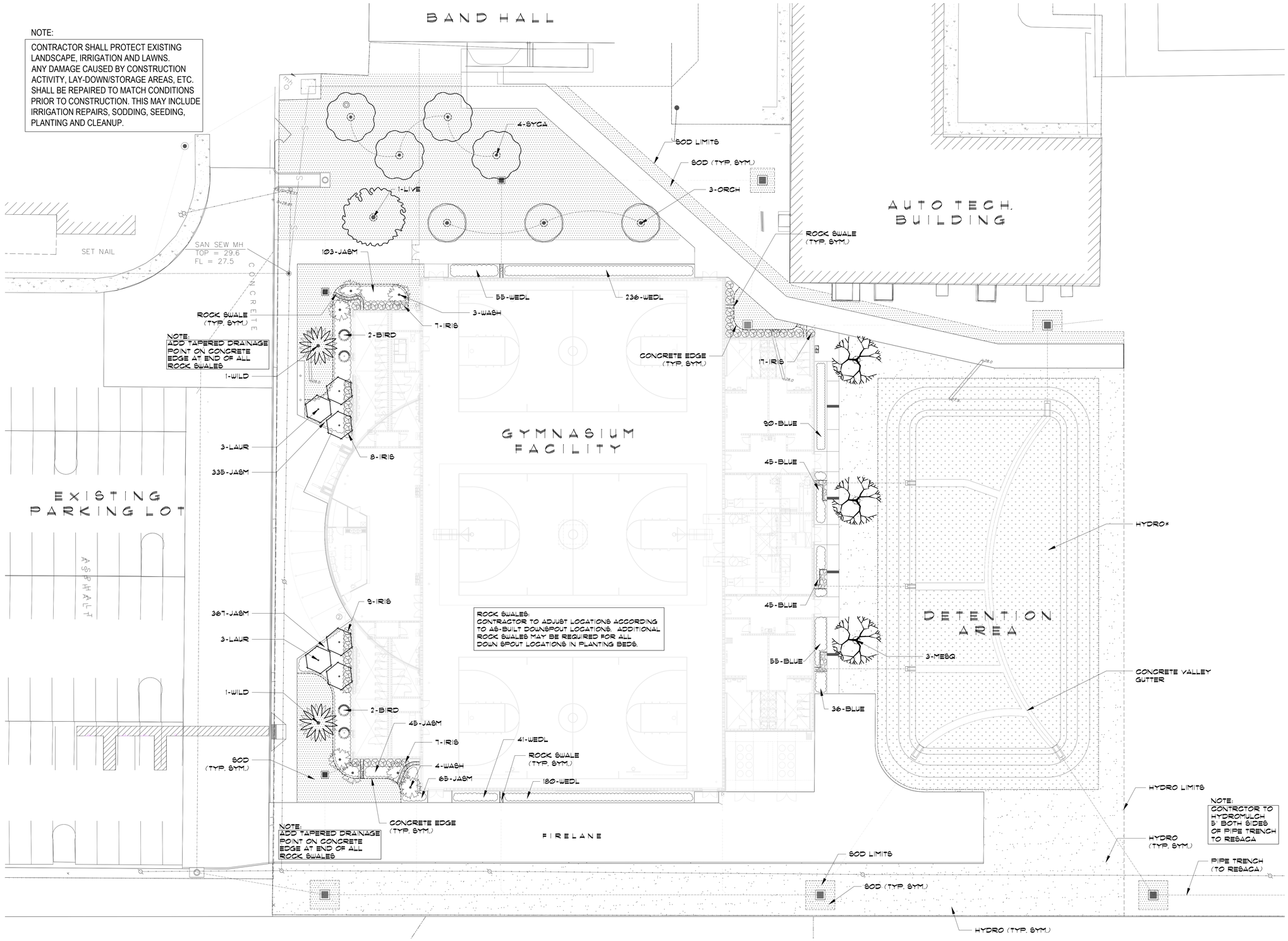

LANDSCAPE PLAN

SCALE: 1/16" = 1'-0"

No.	REVISIONS	BY

GMS ARCHITECTS

1150 Paredes Line Rd. Brownsville TX 78526
(956) 546-0110
fax (956) 546-0196

SSP Design

789 EAST WASHINGTON STREET
BROWNSVILLE, TEXAS 78520
TEL(956) 547-9788
FAX(956) 547-9977
SPAJESKI@SSPDESIGN.COM

BISD Hanna ECHS
Gymnasium Facility

© Copyright 2018
Gomez Mendez Saenz Inc.
Architects-Planners
Interior Designers

Date: June 12, 2019
Scale: As Noted
Project Architect: David Monreal, AIA
Drawn By:
Job No. BISD Hanna Gymnasium
Sheet: L2.01

PLANT SCHEDULE

CODE	BOTANICAL NAME	COMMON NAME	TYPE	SIZE	SPACING	QTY
	PALMS					
WASH	WASHINGTONIA ROBUSTA	MEXICAN FAN PALM	B/B	15-20' TRUNK	A.S.	7
WILD	PHOENIX SYLVESTRIS	WILD DATE PALM	B/B	8-10' TRUNK	A.S.	2
	TREES					
LAUR	SOPHORA SECUNDIFLORA	MOUNTAIN LAUREL (CONT. GRN)	24" BOX	MULTI-TRUNK - 6'-0" HT	A.S.	6
LIVE	QUERCUS VIRGINIANA	LIVE OAK (CONTAINER GROWN)	24" BOX	2-3" CAL. 11' HT X 6' W	A.S.	1
MESQ	PROSOPIS GLANDULOSA	HONEY MESQUITE	B/B	2-3" CAL.	A.S.	3
ORCH	BAUHINA BLAKEANA	'HONG KONG' ORCHID TREE	30 GAL	3-4" CAL. 10'H X 5'W	A.S.	3
SYCA	PLATANUS MEXICANA	MEXICAN SYCAMORE	B/B	3" CAL. - 10'H X 6'W	A.S.	4
	SHRUBS					
BIRD	STRELITZIA REGINAE	BIRD OF PARADISE	15 GAL	20-25 CANES	A.S.	4
IRIS	DIETES IRIDIOIDES	WHITE AFRICAN IRIS	3 GAL	18"HT-BUSHY	18" O.C.	48
	GROUND COVERS					
BLUE	RUELLIA SQUARROSA	BLUE SHADE RUELLIA	1 GAL		12" O.C.	271
JASM	TRACH. ASIATICUM	ASIAN JASMINE	1 GAL		12" O.C.	906
WEDL	WEDELIA TRILOBATA	WEDELIA	4" POTS		A.S.	512
	GRASS					
HYDRO	CYNODON DACTYLON	COMMON BERMUDA HYDROMULCH				20,300 S.F.
HYDRO*	CYNODON DACTYLON	COMMON BERMUDA HYDROMULCH (WITH TACKIFIER)				14,400 S.F.
SOD	CYNODON DACTYLON	# 1 CERTIFIED '419' HYBRID BERMUDA SOD				1,500 S.Y.

NOTE: CONTAINER GROWN MATERIAL SHALL BE GLEN FLORA FARMS OR APPROVED EQUAL.

MATERIAL SCHEDULE

DESCRIPTION	NOTES	QUANTITY
PREMIUM COMPOST	2" LAYER PREMIUM COMPOST (EARTHWISE ORGANICS MIX)	18 C.Y.
SCREENED TOP SOIL	8" FOR ALL PLANTING BEDS	83 C.Y.
MULCH (HARDWOOD)	2" MIN. FOR ALL PLANTING BEDS AND WATERING BASINS (TEXAS NATIVES HARDWOOD)	306 BAGS (2 C.F.)
HERBICIDE	ALL PLANTING BED AREAS AS SPECIFIED	3,400 S.F.
FERTILIZER	ALL PLANT MATERIAL PER DETAILS	3,400 S.F.
PLANTING TABLETS	PER DETAILS / AS SPECIFIED	--
PRE-EMERGENT	ALL PLANTING BED AREAS AS SPECIFIED	3,400 S.F.
GUYING / STAKING	ALL TREES/PALMS PER DETAILS	--
CONCRETE EDGE	6" X 4" EXTRUDED COLORED CONCRETE EDGING 'TEXAS BUFF' COLOR PER PLANS/DETAILS	336 L.F.
ROCK SWALE	18" WIDE WASHED GRAVEL (1" - 1 1/2") SWALE PER DETAILS AT RAIN GUTTER LOCATIONS	150 L.F.
TREE RINGS	36" DIA. 5" COMMERCIAL GRADE ALUMINUM EDGE 'DREAMSCAPE' TREE RINGS PER PLAN/DETAILS	13
IRRIGATION SYSTEM	COMPLETE AUTOMATIC IRRIGATION SYSTEM/ADJUSTMENTS BY LICENSED CONTR.	--

NOTE: CONTRACTORS MUST REVIEW TECHNICAL SPECIFICATIONS FOR ADDITIONAL PRODUCT INFORMATION AND PROJECT REQUIREMENTS.

LANDSCAPE CONSTRUCTION NOTES

1. WORK UNDER THIS CONTRACT INCLUDES SITE REVIEW AND COORDINATION WITH EXISTING CONDITIONS, SITE CLEANUP, EXCAVATION, BED PREP, TILLING, EDGING, PLANTING, STAKING, IRRIGATION, MAINTENANCE, AND GUARANTEE.
2. LANDSCAPE CONTRACTOR SHALL FIELD VERIFY ALL QUANTITIES AND DIMENSIONS PRIOR TO BIDDING. QUANTITIES SHOWN IN SCHEDULE ARE FOR CONVENIENCE ONLY.
3. NOTIFY SSP DESIGN PRIOR TO BID OF ANY DISCREPANCIES IN DRAWINGS/DETAILS OR INSUFFICIENT QUANTITIES DUE TO DIFFERENCES IN PLAN AND ACTUAL FIELD CONDITIONS.
4. LANDSCAPE CONTRACTOR SHALL BE RESPONSIBLE FOR LOCATING AND PROTECTING ALL EXISTING UTILITIES. SPOTTING OF ALL UTILITIES IS REQUIRED.
5. NOTIFY AND MEET WITH SSP DESIGN PRIOR TO ANY CONSTRUCTION FOR VERIFICATION/INTERPRETATION OF PLANS.
6. LANDSCAPE CONTRACTOR SHALL VERIFY ALL PROPERTY BOUNDARIES AND LIMITS OF WORK WITH GENERAL CONTRACTOR/CIVIL ENGINEER. DO NOT BEGIN LANDSCAPE CONSTRUCTION UNTIL ALL BOUNDARIES, EASEMENTS AND RIGHTS-OF-WAY HAVE BEEN VERIFIED IN THE FIELD.
7. LANDSCAPE CONTRACTOR SHALL STAKE OUT ALL BEDS, TREES, PALM LOCATIONS PRIOR TO INSTALLATION FOR APPROVAL BY SSP DESIGN.
8. LANDSCAPE CONTRACTOR TO COORDINATE WITH SSP DESIGN TO ENSURE PROPER PLACEMENT OF PLANT MATERIAL AND IRRIGATION EQUIPMENT.
9. LANDSCAPE CONTRACTOR TO INSTALL EXTRUDED CONCRETE EDGING AS SHOWN ON PLANS.
10. LANDSCAPE CONTRACTOR TO SUPPLY/INSTALL 36" DIA. TREE RINGS AS SHOWN ON PLANS/DETAILS.
11. NOTIFY SSP DESIGN PRIOR TO PLANTING OPERATIONS FOR APPROVAL OF ALL PLANT MATERIAL ON SITE. ANY PLANT MATERIAL NOT APPROVED BY SSP DESIGN WILL BE SUBJECT TO REJECTION.
12. IRRIGATION CONTRACTOR SHALL SUPPLY AND INSTALL COMPLETE AUTOMATIC IRRIGATION SYSTEM MAINLINE, SLEEVES, LATERALS, AND POP-UP HEADS, AND ADJUSTMENTS, TO COVER ALL LANDSCAPE AREAS AS PER PLANS/DETAILS. IRRIGATION SYSTEM SHALL BE INSTALLED BY A TEXAS LICENSED IRRIGATOR ONLY.
13. LANDSCAPE CONTRACTOR SHALL REMOVE ALL EXISTING GRASS/WEEDS BY HERBICIDING PRIOR TO BED PREP AND SOIL REPLACEMENT.
14. LANDSCAPE CONTRACTOR SHALL REMOVE 12" OF EXST'G SOIL WITHIN ALL BED AREAS AND REPLACE WITH IMPORTED TOP SOIL/PREMIUM COMPOST MIX.
15. LANDSCAPE CONTRACTOR SHALL CONSTRUCT 6"x36" WATERING BASINS AROUND ALL TREES/PALMS WITH A MIN. 2" LAYER OF CYPRESS MULCH.
16. LANDSCAPE CONTRACTOR SHALL LOOSEN / GRADE ALL LAWN AREAS PRIOR TO HYDRO-MULCHING/SODDING TO ENSURE PROPER DRAINAGE AND UNIFORM SURFACE.
17. LANDSCAPE CONTRACTOR SHALL REMOVE ALL EXISTING GRASS AND WEEDS BY HERBICIDING, DISKING, FLOATING AND LIGHT GRADING OF ENTIRE PROJECT AREA PRIOR TO SODDING/HYDROMULCHING.
18. LANDSCAPE CONTRACTOR SHALL ESTABLISH AND MAINTAIN ALL PLANT MATERIAL FOR 90 DAYS AFTER 'SUBSTANTIAL COMPLETION' AND SHALL GUARANTEE ALL TREES/PALMS FOR A PERIOD OF ONE YEAR.
19. IRRIGATION CONTRACTOR SHALL GUARANTEE ALL SYSTEM COMPONENTS FOR A PERIOD OF ONE YEAR.
20. SEE SPECIFICATIONS FOR FURTHER INSTRUCTIONS/REQUIREMENTS.

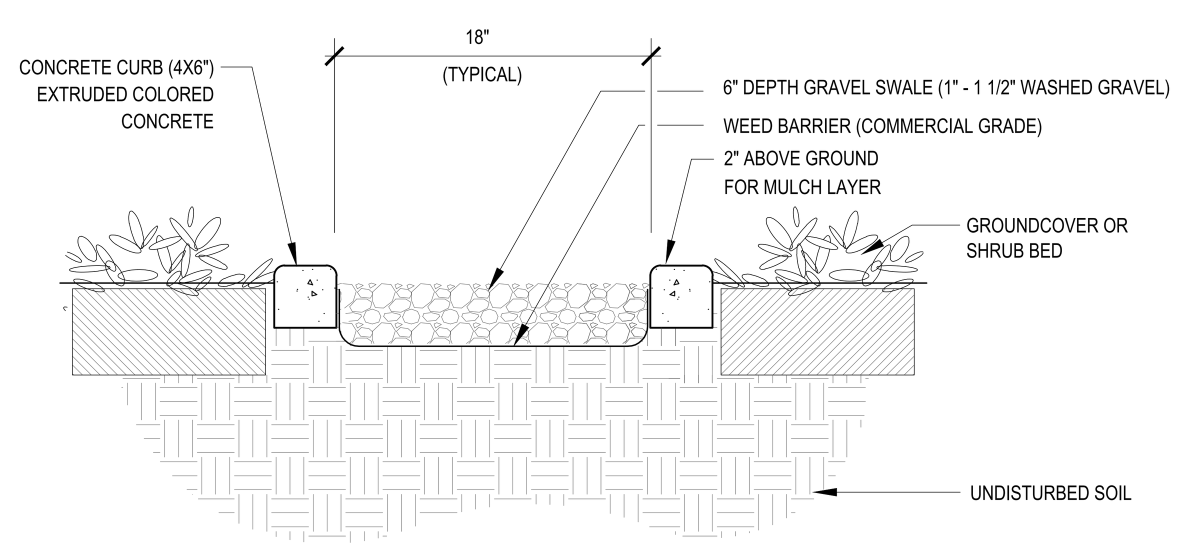

NOTES:

1. CONCRETE CURBING TO HAVE 1 1/2" DEEP CONTRACTION JOINTS @ 5'-0" SPACING.
2. CONCRETE CURBING TO HAVE TAPERED DRAINAGE POINTS AT 10' O.C.
3. 2500-3000 PSI COMPRESSIVE STRENGTH, 490 PSI FLEXURAL STRENGTH.
4. USE HALF-INCH POLYPROPYLENE FIBER REINFORCEMENT.
5. NATURAL FINISH AND TEXAS BUFF COLOR.
6. EQUAL TO 'CURB APPEAL' EDGING (956-867-8350).

1 ROCK SWALE DETAIL
NOT TO SCALE

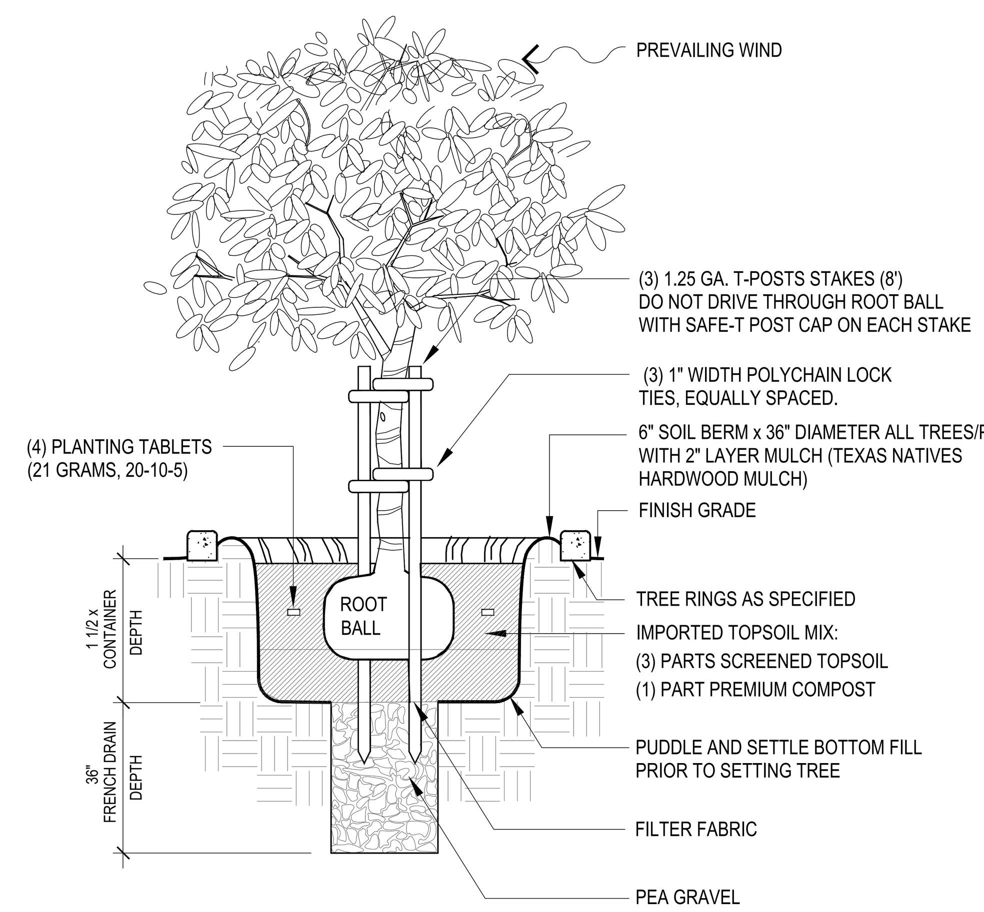

2 TREE PLANTING DETAIL
NOT TO SCALE

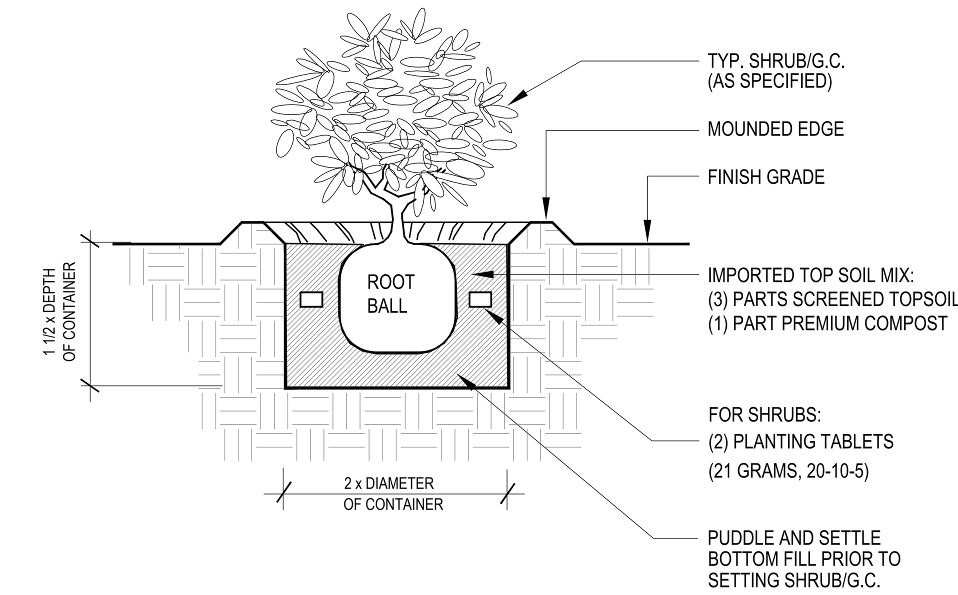

3 SHRUB/G.C. PLANTING DETAIL
NOT TO SCALE

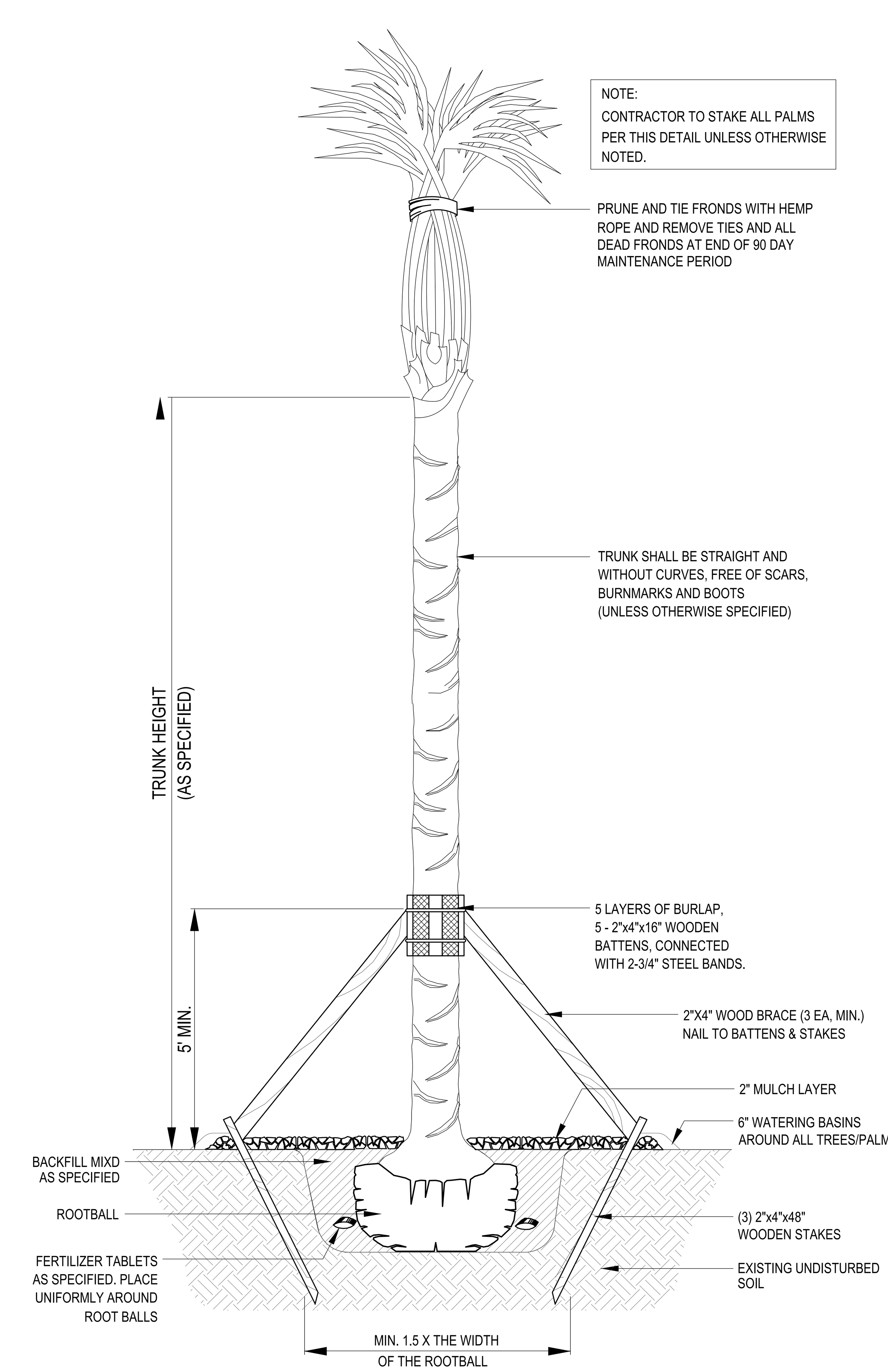

7 PALM PLANTING DETAIL
NOT TO SCALE

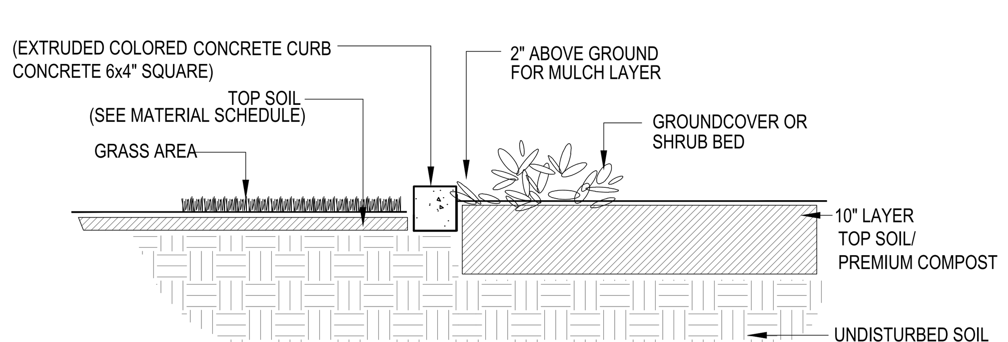

NOTES:

1. CONCRETE CURBING TO HAVE 1 1/2" DEEP CONTRACTION JOINTS @ 5'-0" SPACING.
2. CONCRETE CURBING TO HAVE TAPERED DRAINAGE POINTS AT 10' O.C.
3. 2500-3000 PSI COMPRESSIVE STRENGTH, 490 PSI FLEXURAL STRENGTH.
4. USE HALF-INCH POLYPROPYLENE FIBER REINFORCEMENT.
5. SMOOTH NATURAL FINISH, COLOR TO MATCH BUILDING.
6. EQUAL TO 'CURB APPEAL' EDGING (956-867-8350).

4 CONCRETE EDGE DETAIL
NOT TO SCALE

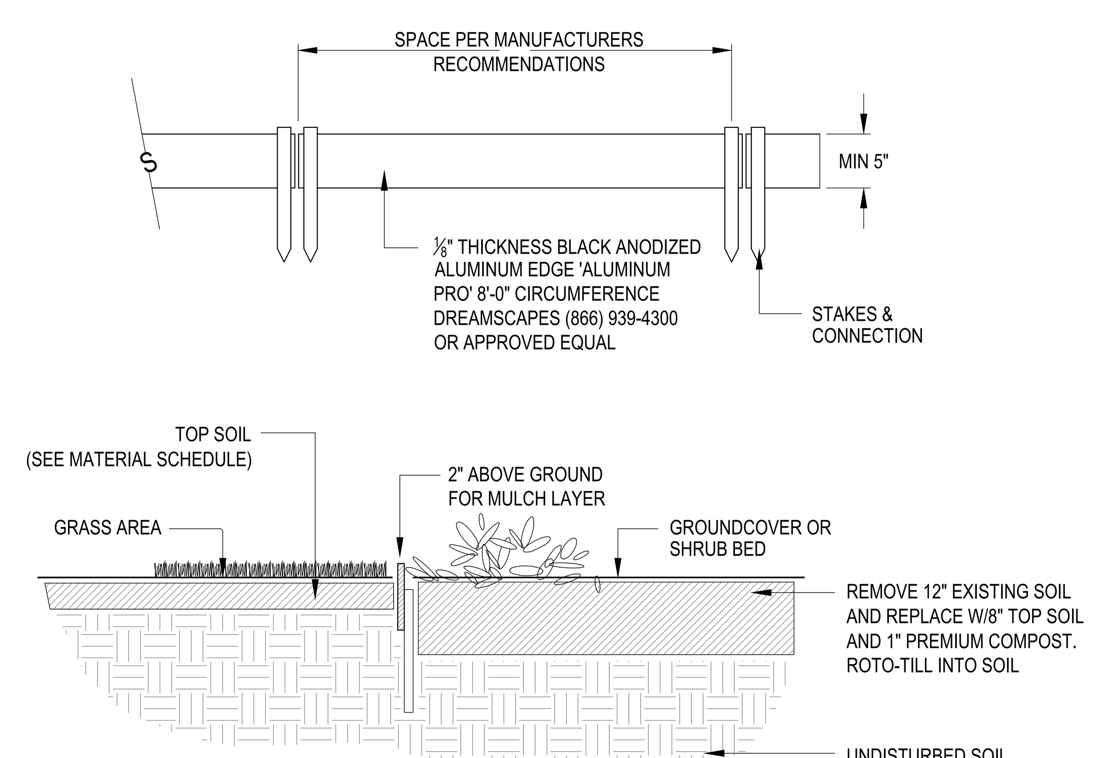

NOTE:

ALL EDGING TO BE ANGLED WITH 6" OVERLAP
AND FLUSH WITH ADJACENT PAVEMENT

5 TREE RING DETAIL
NOT TO SCALE

NOTE:

1. S = SPACING, (REFER PLANT LIST FOR AMOUNT OF SPACING.)
2. USE SPACING LAYOUT FOR SHRUBS, GROUNDCOVERS AND ANNUALS.

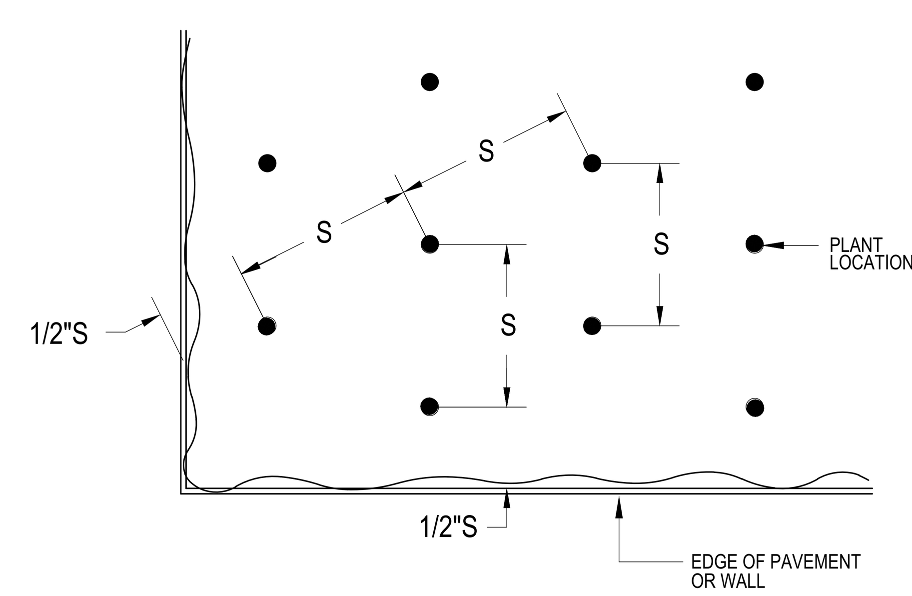

6 TRIANGULAR PLANT SPACING DIAGRAM
NOT TO SCALE

No.	REVISIONS	BY

GMS ARCHITECTS
1150 Paredes Line Rd. Brownsville TX 78526
(956) 546-0110
fax (956) 546-0196

SSP Design
789 EAST WASHINGTON STREET
BROWNSVILLE, TEXAS 78520
TEL(956) 547-9788
FAX(956) 547-9977
SPAJESKI@SSPDESIGN.COM

BISD Hanna ECHS
Gymnasium Facility

© Copyright 2018
Gomez Mendez Saenz Inc.
Architects-Planners
Interior Designers

Date: June 12, 2019
Scale: As Noted
Project Architect: David Monreal, AIA
Drawn By:
Job No. BISD Hanna Gymnasium
Sheet:

L2.02

4.2 SPACE ALLOWANCES AND REACH RANGES

TAS SECTIONS 4.2.1 – WHEELCHAIR PASSAGE WIDTH

A. The minimum clear width for single wheelchair passage shall be 32" at a point and 36" continuously

TAS SECTIONS 4.2.2 – WIDTH FOR WHEELCHAIR PASSING

A. The minimum clear width for two wheelchairs to pass is 60"

TAS SECTIONS 4.2.4.1 – SIZE AND APPROACH

A. Minimum clear floor space for a wheelchair and occupant shall be 30" wide x 48" long. Clear floor space shall be centered on the element it serves.

4.3 ACCESSIBLE ROUTE

TAS SECTIONS 4.3.2 – LOCATION

A. At least one accessible route shall be provided from public transportation stops, accessible parking and loading zones, and public streets or sidewalks to the accessible building entrance.

TAS SECTIONS 4.3.3 – WIDTH

A. The minimum clear width of an accessible route shall be 36" except at doors.

TAS SECTIONS 4.3.4 – PASSING SPACE

A. If an accessible route is less than 60" in width, then passing spaces of at least 60"x60" shall be provided at 200' max. spacing.

TAS SECTIONS 4.3.5 – HEAD ROOM

A. Accessible routes shall have 80" min. clear head room.

TAS SECTIONS 4.3.7 – SLOPE

A. Running slope shall not exceed 1:20. (If slope exceeds 1:20, refer to section 4.8)

B. Cross slope shall not exceed 1:50

4.4 PROTRUDING OBJECTS (REFERENCE DETAIL 4.4.1 & 4.4.2)

TAS SECTIONS 4.4.1 – GENERAL

A. Objects projecting from walls (for example, telephones) with their leading edges between 27"-80" above the finished floor shall protrude no more than 4" into walks, halls, corridors, passageways, or aisles. Objects mounted with their leading edges at or below 27" above the finished floor may protrude any amount. Free-standing objects mounted on posts or pylons may overhang 12" maximum from 27"-80" above the ground or finished floor. Protruding objects shall not reduce the clear width of an accessible route or maneuvering space.

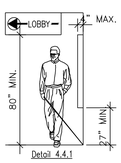

Detail 4.4.1

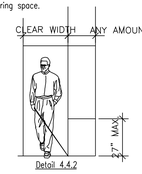

Detail 4.4.2

4.5 GROUND AND FLOOR SURFACES

TAS SECTIONS 4.5.2 – CHANGES IN LEVEL (REFERENCE DETAIL 5.1)

A. Changes in level up to 1/4" may be verticle and without edge treatment

B. Changes in level between 1/4" and 1/2" shall be beveled with a slope no greater than 1:2.

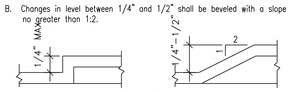

Detail 5.1

TAS SECTIONS 4.5.3 – CARPET

A. Carpet provided on a floor surface shall be securely attached; have a firm pad or backing, or no pad; and have a level loop, textured loop, level cut pile, or level cut/uncut pile texture. Maximum pile thickness shall be 1/2". Exposed edges of carpet shall be fastened to floor surfaces and have trim along the exposed edges.

TAS SECTIONS 4.5.4 – GRATINGS

A. If gratings are located in walking surfaces or along accessible routes, then they shall have spaces no greater than 1/2" wide in one direction.

B. If gratings have elongated openings, then they shall be placed so that the long dimension is perpendicular to the dominant direction of travel.

4.6 PARKING AND PASSENGER LOADING ZONES

TAS SECTIONS 4.6.3 – PARKING SPACES

A. Accessible parking shall be at least 96" wide.

B. Parking access aisles shall be 60" wide.
Van accessible access aisles shal be 96" wide.

C. Surface slope shall not exceed 1:50 in all directions
(Note : no built up curb ramp may be located in an accessible parking access aisle.)

TAS SECTIONS 4.6.4 – SIGNAGE

A. Each accessible parking space must have individual verticcilly mounted or suspended sign. Required van accessible spaces must be designatred.

A. Characters and symbols on such signs shall be located 60" minimum above the ground.

B. Signage located within an accessible route shall be located 80" min. above the walking surface.

TAS SECTIONS 4.6.5 – VERTICAL CLEARANCE

A. Provide minimum verticle clearance of 114" at accessible passenger loading zones and along at least one vehicle access route from site entrances and exits.

TAS SECTIONS 4.6.6 – PASSENGER LOADING ZONE

A. Passenger loading zones shall provide an access aisle at least 60" wide and 20 ft long adjacent and parallel to the vehicle pull-up space. If there are curbs between the access aisle and the vehicle pull-up space, then a curb ramp complying with 4.7 shall be provided. Vehicle standing spaces and access aisles shall be level with surface slopes not exceeding 1:50 in all directions.

4.7 CURB RAMPS

TAS SECTIONS 4.7.2 – SLOPE (REFERENCE DETAIL 4.7)

A. Slopes of curb ramps shall comply with 4.8.2.

B. Maximum slopes of adjoining gutters, road surface immediately adjacent to the curb ramp, or accessible route shall not exceed 1:20.

TAS SECTIONS 4.7.3 – WIDTH (REFERENCE DETAIL 4.7)

A. The minimum width of a curb ramp shall be 36", exclusive of flared sides.

TAS SECTIONS 4.7.5 – SIDES OF CURB RAMPS (REFERENCE DETAIL 4.7)

A. If a curb ramp is located where pedestrians must walk across the ramp or where it is not protected by handrails or guardrails, it shall have flared sides; the maximum slope of the flare shall be 1:10

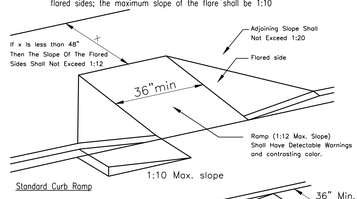

Standard Curb Ramp

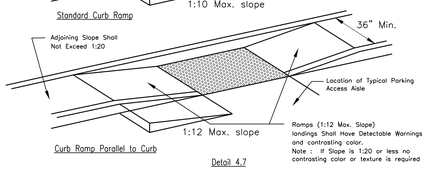

Curb Ramp Parallel to Curb

Detail 4.7

TAS SECTIONS 4.7.10 – DIAGONAL CURB RAMPS

A. If diagonal curb ramps have returned curbs or other well-defined edges, such edges shall be parallel to the direction of pedestrian flow. The bottom of diagonal curb ramps shall have 48" minimum clear space. If diagonal curb ramps are provided at marked crossings, the 48" clear space shall be within the markings. If diagonal curb ramps have flared sides, they shall also have at least a 24" long segment of straight curb located on each side of the curb ramp and within the marked crossing.

TAS SECTIONS 4.7.11 – ISLANDS

A. Any raised islands in crossings shall be cut through level with the street or curb ramps at both sides and a level area at least 48" long between the curb ramps in the part of the island intersected by the crossings.

4.8 RAMPS

TAS SECTIONS 4.8.1 – GENERAL

A. Any part of an accessible route with a slope greater than 1:20 shall be considered a ramp and shall comply with 4.8

TAS SECTIONS 4.8.2 – SLOPE AND RISE

A. The least possible slope shall be used for any ramp. The maximum slope of a ramp in new construction shall be 1:12. The maximum rise for any run shall be 30".

TAS SECTIONS 4.8.3 – CLEAR WIDTH

A. The minimum clear width of a ramp 30 ft or less in length shall be 36". Ramps more than 30 ft. in length shall have a minimum clear width of 44".

TAS SECTIONS 4.8.4 – LANDINGS

A. Level landings required at top and bottom of each run, with the following features:
1. Minimum Width: Equal to width of ramp
2. Length: Minumum 60" clear
3. At change of direction landing shal be 60" x 60" min.

TAS SECTION 4.8.5 – HANDRAILS

A. Handrails are required at all ramps with > 6" rise.

B. Height: 34-38" above ramp surface

C. The clear space between the handrail and the wall shall be 1-1/2".

TAS SECTIONS 4.8.7 – EDGE PROTECTION

A. Ramps and landings with drop offs shall have curbs, walls, railings, or projecting surfaces that prevent slipping off the ramp. Curbs shall be a minimum of 2" high.

4.9 STAIRS

TAS SECTIONS 4.9.2 – TREADS AND RISERS

A. All steps on a flight of stairs shall have uniform riser heights and tread widths
1. Minimum tread depth shall be 11", measured from riser to riser (not including nosing)
2. Open risers are not permitted

TAS SECTION 4.9.4 – HANDRAILS

A. Non-continuous handrails shall extend 12" beyond the top riser and 12" plus the width of one tread beyond the bottom riser. At the top, the extension shall be parallel to the floor. At the bottom, the handrail shall continue to slope for a distance of one tread width (11"); the remaining extension shall be horizontal.

B. Height: 34" – 38", measured from the stair nosing.

4.10 ELEVATORS

TAS SECTIONS 4.10.3 – HALL CALL BUTTONS

A. Shall be centered 42" above floor

TAS SECTIONS 4.10.4 – HALL LANTERNS

A. Visible signals shall have the following features:
1. Fixtures shall be mounted with centerline at least 72" above the lobby floor
2. Visual elements shall be at least 2-1/2" in the smallest dimension

TAS SECTIONS 4.10.5 – RAISED AND BRAILLE CHARACTERS ON HOISTWAY ENTRANCES

A. All elevator hoistway entrances shall have raised and Braille floor no. designations provided on both jambs. Centerline of the characters shall be 60" above the floor. Characters shall be 2" high.

TAS SECTIONS 4.10.6 – DOOR PROTECTIVE AND REOPENING DEVICE

A. Elevator doors shall open and close automatically. They shall be provided with a reopening device that will stop and reopen a car door and hoistway door automatically if the door becomes obstructed by an object or person.

TAS SECTIONS 4.10.12 – CAR CONTROLS

A. All floor buttons shall be:
1. All control buttons shall be at least 3/4" in their smallest dim. They shall be flush or raised.
2. All control buttons shall be designated by Braille and by raised standard alphabet characters for letters, arabic characters for numerals. The call button for the main entry floor shall be designated by a raised star at the left of the floor designation.
3. Maximum 54" above floor where side approach is provided
4. Maximum 48" where forward approach is provided

B. Emergency Controls:
1. Shall have centerlines 35" minimum above floor
2. Shall be grouped at bottom of panel

C. The emergency communication system shall not require voice communication.

4.11 PLATFORM LIFTS

NOTE : REQUIRES A VARIANCE FROM THE T.D.L.R. TO USE IN LIEU OF AN ELEVATOR

TAS SECTIONS 4.11.2, 4.27.3 – OTHER REQUIREMENTS CONTROLS AND OPERATING SYSTEMS

A. Heights permitted:
Controls and operating mechanisms shall be located for either a forward or side approach from any direction of travel. They shall be located 28" min. and 48" maximum above the floor. They shall be operable with one hand. There shall be at least one handrail complying with 4.26.
Wheelstops and guardrails shall be provided where necessary.

4.13 DOORS

TAS SECTION 4.13.4 – DOUBLE – LEAF DOORWAYS

A. Doorways with two independently operated leaves shall have at least one active leaf that meets the requirements in 4.13.5 and 4.13.6.

TAS SECTION 4.13.5 – CLEAR WIDTH

A. Doorways shall provide a clear opening of 32" minimum, with the door open 90°.
1. Clear opening shall be measured between the face of the door and opposite stop.
2. Openings more than 24" in depth shall provide a clear opening of 36" minimum.
Exception: Doors not requiring full user passage, such as shallow closets, shall have a clear opening of 20" minimum.

TAS SECTION 4.13.6 – MANEUVERING CLEARANCES AT DOORS

Provide level (1:50 max. slope) and clear maueuvering area at doors as follows:

A. Front approach pull side – 60" min. width & 18" min. beside strike edge
Front approach push side – 48" min width & 0" beside strike edge
(12" @ strike if door has both a closer and a latch)

B. Hinge side approach pull side – 60" min. width; 36" min. beside strike edge
or – 54" min. width; 42" min. beside strike edge
Hinge side approach push side – 42" min. width & 18" min. bside hinge edge
(48"min. width if door has both a closer and a latch)

C. Latch side approach pull side – 48" min. width and 24" min. beside strike edge
(54"min. width if door has a closer)
Latch side approach push side – 42" min. width and 24" min. beside strike edge
(46"min. width if door has a closer)

TAS SECTION 4.13.8 – THRESHOLDS AT DOORWAYS

A. Maximum threshold height: 1/2" (3/4" at exterior sliding doors). Raised thresholds and floor level changes shall be beveled with a slope no greater than 1:2.

TAS SECTION 4.13.9 – DOOR HARDWARE

A. Handles, pulls, latches, locks, and other operating devices shall have a shape that is easy to grasp with one hand and does not require tight grasping, tight pinching, or twisting of the wrist to operate.
1. Lever-operated mechanisms, push-type mechanisms, and U-shaped handles are acceptable designs.
2. When sliding doors are fully open, operating hardware shall be exposed and usable from both sides.
3. Hardware required for accessibel door passage shall be mounted no higher than 48" above finished floor.

TAS SECTION 4.13.10 – DOOR CLOSERS

A. If a door has a closer, then the sweep period of the closer shall be adjusted so that from an open position of 70°, the door will take at least 3 seconds to move to a point 3" from the latch, measured to the leading edge of the door.

TAS SECTION 4.13.11 – DOOR OPENING FORCE

A. The maximum force for pushing or pulling open a door shall be as follows:
1. Fire doors shall have the minimum opening force allowable by the appropriate administrative authority.
2. Other doors
a. Exterior hinged doors: no requirement.
b. Interior hinged doors: 5.0 lbf.
c. Sliding or folding doors: 5.0 lbf.
These forces do not apply to the force required to retract latch bolts or disengage othe devices that may hold the door in a closed position.

4.15 DRINKING FOUNTAINS

TAS SECTION 4.15.2 – SPOUT HEIGHT (REFERENCE DETAIL 4.15 for accessible unit)

A. Accessible spouts shall be no higher than 36", measured from the floor or ground surface to the spout outlet.

B. In addition to accessible unit, at least one drinking fountain shall be at standard height (may be "high/low" type if located in one location).

TAS SECTION 4.15.3 – SPOUT LOCATION

A. Spouts shall be located at the front of the unit and shall direct the water flow in a trajectory that is parallel or nearly parallel to the front of the unit.
1. The spout shall provide a flow of water at least 4" high.
2. If the fountain has a round or oval bowl, the spout must be positioned so the flow of water is within 3" of the front edge of the fountain.

TAS SECTION 4.15.4 – CONTROLS

A. Unit controls shall be front mounted or side mounted near the front edge.

TAS SECTION 4.15.5 – CLEARANCES (REFERENCE DETAIL 4.15).

A. Wall and post mounted cantilever fountains shall have clear knee space as follows:
1. Minimum 27" high (from apron bottom to floor) minimum 30" wide, and 17" – 19" deep.
2. A minimum 30" by 48" clear floor space allowing a forward approach to the unit shall be provided.

B. Free standing or built-in units not having a clear knee space shall have a minimum 30" by 48" clear floor space allowing a parallel approach to the unit.

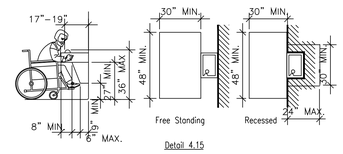

Detail 4.15

4.16 WATER CLOSETS

TAS SECTION 4.16.2 – CLEAR FLOOR SPACE

A. Clear floor space for water closets not in stalls shall be provided as follows:
Front approach – 48" min. wide x 66" min. long
Side approach – 56" min. to front of toilet x 48" min. wide
Both approach – 60" min. wide x 56" min. long (Reference Detail 4.16)

B. No doorswings are allowed in clear floor area.

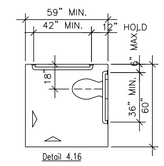

Detail 4.16

TAS SECTION 4.16.3 – HEIGHT (REFERENCE DETAIL 4.16.2)

A. The height to the top of the toilet seat shall be 17" – 19" above floor.
1. Seats shall not be sprung to return to a lifted position.

TAS SECTIONS 4.16.4, 4.26 – GRAB BARS (REFERENCE DETAILS 4.16.1, 4.16.2 & 4.16.3)

A. For water closets not located in toilet stalls, the following grab bars shall be provided, 33" – 36" above the finish floor:
1. Side wall: 42" long minimum, hold 12" min. from back wall.
2. Back wall: 36" long minimum, 12" minimum each side of water closet centerline.

Refer to 4.26 Grab Bars for size and structural elements.

TAS SECTIONS 4.16.5, 4.27.4 – FLUSH CONTROLS (REFERENCE DETAIL 4.16.3)

A. Controls shall be 44" maximum above the finish floor.
1. Lever controls or flush valves shall be mounted on the wide side of toilet areas.
2. Controls shall be hand operated or automatic.
3. Controls shall be operable with one hand and shall not require tight grasping, pinching, or twisting of the wrist.
4. The force required to activate controls shall be no greater than 5lbf.

TAS SECTION 4.16.6 – DISPENSERS (REFERENCE DETAIL 4.16.2)

A. Toilet paper dispensers shall be installed on the side wall, a minimum 19" above the floor, and a maximum 36" from the rear wall.
1. Dispensers that control delivery or do not permit continuous paper flow shall not be used.

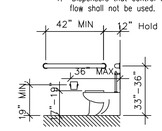

Detail 4.16.2

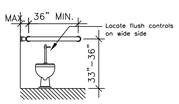

Detail 4.16.3

4.17 TOILET STALLS

TAS SECTION 4.22.4 – WHERE APPLICABLE

A. If toilet stalls are provided in a toilet room or bathroom, then at least one shall be a "standard" accessible toilet stall (for wheelchair users) complying with this section. (REFERENCE DETAIL 4.17.1)

B. If 6 or more toilet stalls are provided in a toilet room or bathroom in addition to the 'standard' accessible stall required; an additional 'alternate A' accessible stall 36" wide (for ambulatory persons with disabilities) complying with this section shall be provided. (REFERENCE DETAIL 4.17.2)

C. Alterations/Existing Conditions: In alteration work, where provision of a 'standard' accessible stall is technically infeasible, or where plumbing code requirements prevent combining existing stalls to provide space, either 'alternate' stall (A or B) complying with this section may be provided in lieu of the standard stall. (Note :requires a variance from T.D.L.R.)

TAS SECTION 4.17.3 – SIZE AND ARRANGEMENT (REFERENCE DETAIL 4.17)

A. Toilet stalls may be arranged to provide either a left or a right handed approach. Accessible toilet stalls shall have the following dimensions:
1. 'Standard' Accessible Stall
60" minimum width.
59" minimum depth, with floor mounted water closet
56" minimum depth, with wall mounted water closet
Door: outward swinging (if door swings into stall, depth shall be increased by 36". Stall doors must have 18" on pull strike jamb.
2. 'Alternate A' Accessible Stall (required when more than 6 stalls provided, permitted in lieu of standard stall only with a variance from T.D.L.R.)
36" width – hold this dim.
69" minimum depth, with floor mounted water closet.
66" minimum depth with wall mounted water closet
Door: outward swinging.
3. 'Alternate B' Accessible Stall (permitted in lieu of standard stall only with variance from T.D.L.R.)
48" minimum width.
54" minimum depth.
Door : outward swinging.

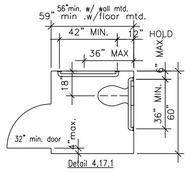

Detail 4.17.1

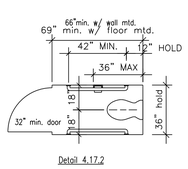

Detail 4.17.2

TAS SECTION 4.17.4 – TOE CLEARANCES

A. In 'Standard' accessible stalls, the front partition and at least one side partition shall provide a toe clearance of at least 9" above the floor.

B. If the depth of the stall is greater than 60", the toe clearance is not required.

TAS SECTION 4.17.5 – DOORS

A. Toilet stall doors, including hardware, shall comply with 4.13 DOORS

B. If toilet stall approach is from the latch side of the stall door, clearance between the door side of the stall and any obstruction shall be 42" minimum. (This is an exception from typical door maneuvering clearances)

TAS SECTION 4.17.6 – GRAB BARS (REFERENCE DETAILS 4.16.2, 4.16.3, 4.17.1 & 4.17.2)

A. Grab Bars shall be mounted 33" – 36" above the floor.

Refer to 4.26 Grab Bars for size and structural requirements.

4.18 URINALS

TAS SECTION 4.18.2 – HEIGHT (REFERENCE DETAIL 12.3.1)

A. Urinals shall be stall-type or wallhung with a tapered, elongated rim at 17" maximum above the finished floor.
The rim shall extend a minimum of 14" from the wall.

TAS SECTION 4.18.3 – CLEAR FLOOR SPACE (REFERENCE DETAIL 4.18.1)

A. A clear floor space 30" wide by 48" deep minimum shall be provided in front of urinal to allow forward approach.
1. This space shall adjoin or overlap an accessible route.
2. Urinal shield that do not extend beyond the front edge of the urinal rim may be provided with 29" clearence between them.
3. Urinals installed in alcoves deeper than 24" require a maneuvering area of at least 36" minimum wide, centered on fixture.

TAS SECTION 4.18.4 – FLUSH CONTROLS (REFERENCE DETAIL 4.18.2)

A. Controls shall be 44" maximum above the finished floor.
1. Controls shall be hand operated or automatic.
2. Controls shall be operable with one hand and shall not require tight grasping, pinching, or twisting of the wrist.
3. The force required to activate controls shall be no greater than 5 lfb.

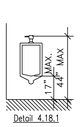

Detail 4.18.1

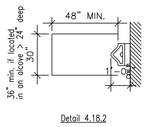

Detail 4.18.2

4.19 LAVATORIES & MIRRORS

TAS SECTION 4.19.2 – HEIGHT & CLEARANCES (REFERENCE DETAIL 4.19.1 & 4.19.2)

A. Lavatories shall be mounted with the rim or counter surface no higher than 34" above the finished floor.
1. Lavatories shall extend 17" minimum from the wall.
2. Clearance of 29" minimum shall be provided from the finished floor to bottom of apron.
3. Knee clearance of 27" minimum shall extend 8" minimum under the edge of the lavatory.
4. Toe clearance of 9" minimum shall be provided for the full depth of the lavatory.

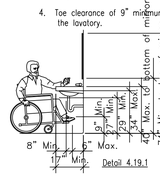

Detail 4.19.1

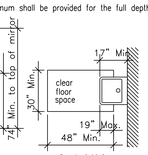

Detail 4.19.2

No.	REVISIONS	BY

GMS ARCHITECTS
1150 Paredes Line Rd.
Brownsville TX 78526
(956) 546-0110
fax (956) 546-0196

BISD Hanna ECHS
Gymnasium Facility

REGISTERED ARCHITECT DAVID A. MONREAL 78556 STATE OF TEXAS
6-14-2019

© Copyright 2019
Gomez Mendez Saenz Inc.

Architects-Planners
Interior Designers

Date:	JUNE, 2019
Scale:	As Noted
Project Architect:	David Monreal, AIA
Drawn By:	RB
Job No.	BISD Hanna Gymnasium
Sheet:	G1.00

TAS SECTION 4.19.4 – EXPOSED PIPES AND SURFACES

A. Hot water and drain pipes under lavatories shall be insulated or otherwise configured to protect against contact.

B. There shall be no sharp or abrasive surfaces under lavatories.

TAS SECTIONS 4.19.5, 4.27.4 – FAUCETS

A. Controls shall be operable with one hand and shall not require tight grasping, pinching, or twisting of the wrist.

B. The force required to activate controls shall be no greater than 5 lbf.

C. Lever-operated, push-type, and electronically controlled mechanisms are examples of acceptable designs.

D. If self-closing valves are used the faucet shall remain open for at least 10 seconds.

TAS SECTION 4.19.6 – MIRRORS (REFERENCE DETAIL 4.19.1)

A. Mirrors shall be mounted with the bottom edge of the reflecting surface 40" maximum above the finished floor.

B. The top edge of the reflecting surface must be at least 74" AFF.

4.20 BATHTUBS

TAS SECTION 4.20.2 – FLOOR SPACE

A. Clear floor space shall be provided in front of bathtubs as follows:
30" wide x 60" long beside the bathtub for side approach
48" wide x 60" long beside the bathtub for front approach

with seat at head of tub – 30" wide x 75" long beside tub

TAS SECTION 4.20.3 – SEAT

A. An in-tub seat or a seat at the head end of the tub shall be provided. Seats shall be mounted securely and shall not slip during use.

TAS SECTIONS 4.20.4 – GRAB BARS

A. Heights permitted:

1. With in Tub Seat:
Foot Control wall: 24" long minimum, from outside wall, 33–36" above floor
Back wall: 2 bars, 24" long minimum, 12" maximum from foot wall, 24" maximum from head wall; one 33–36" above floor, one 9" above the tub
Head wall: 12" minimum, from outside wall, 33–36" above floor

2. With Seat at Head of Tub:
Control wall: 24" long minimum, from outside wall, 33–36" above floor
Back wall: 2 bars, 48" long minimum, 12" maximum from foot end, 15" maximum from head end; one 33–36" above floor, one 9" above the tub

Head wall: none

TAS SECTION 4.20.5

A. Controls must be located up front to the open side of tub

TAS SECTION 4.20.6 – SHOWER UNIT

A. A shower spray unit with a hose at least 60" long shall be provided that they can be used both as fixed and hand held.

4.21 SHOWER STALLS

TAS SECTION 4.21.2 – SIZE AND CLEARANCES

A. Shower stalls shall be either 36"x36" clear inside dimension (hold) at transfer type or 30" min. x 60" min. clear inside dimension at roll in type.

TAS SECTIONS 4.21.3 – SEAT

A. Seat is required in 36"x 36" stalls, and shall have the following features:

1. Shall be 17"–19" above bathroom floor
2. Shall extend the full depth of the stall
3. Shall be located on the wall opposite control wall
4. Maximum space between wall and seat edge shall be 1–1/2"
5. Shall project 16" maximum into stall width, except at the rear 15" maximum of the stall, where the seat may project 23"
6. Where a seat is provided in a roll in type shower it must be the fold-up type.

TAS SECTIONS 4.21.4 – GRAB BARS

A. Grab bars shall be mounted 33–36" above floor

TAS SECTIONS 4.21.5 – CONTROLS

A. All shower controls shall be located 38" minimum and 48" maximum above the floor, up front on the open side.

TAS SECTION 4.21.6 – SHOWER UNIT

A. A shower spray unit with a hose at least 60" long that can be used both as a fixed shower head and as a hand held shower shall be provided. The mounting device shall comply with the requirements for Forward Reach.

TAS SECTIONS 4.21.7 – CURBS

A. If provided, curbs on transfer showers shall be no higher than 1/2" roll-in showers shall not have curbs

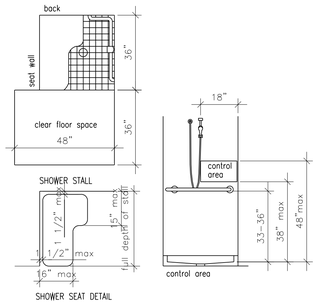

4.22 TOILET ROOMS

TAS SECTIONS 4.22.2 – DOORS

A. All doors to accessible toilet rooms shall comply with 4.13. Doors shall not swing into clear floor space required for any fixture. Clear floor turning space may overlap door swings.

TAS SECTIONS 4.22.3 – CLEAR FLOOR SPACE

A. The accessible fixtures and controls required in 4.22.4, 4.22.5, 4.22.6 4.22.7 shall be on an accessible route. An unobstructed turning space complying with 4.2.3 shall be provided within an accessible toilet room. The clear floor space at fixtures and controls, the accessible route, and the turning space may overlap, however; the only turning space provided shall not be located within a stall.

TAS SECTIONS 4.22.4 – WATER CLOSETS

A. If toilet stalls are provided, then at least one shall be a standard toilet stall complying with 4.17; where 6 or more stalls are provided in addition to the stall complying with 4.17.3, at least one stall 36" wide with an outward swinging, self-closing door and parallel grab bars shall be provided. Water closets in such stalls shall comply with 4.16.

TAS SECTIONS 4.22.5 – URINALS

A. If urinals are provided, then at least one shall comply with 4.18.

TAS SECTIONS 4.22.6 – LAVATORIES AND MIRRORS

A. If lavatories and mirrors are provided, then at least one of each shall comply with 4.19. Accessible lavatories and mirrors shall not be located within toilet stalls unless other accessible lavatories and mirrors are provided in the toilet room.

TAS SECTIONS 4.22.7 – CONTROLS AND DISPENSERS

A. If controls, dispencers, receptacles, or other equipment are provided, then at least one of each shall be on an accessible route and shall comply with 4.27 – (Controls & Operating Mechanisms).

4.23 – BATHROOMS, BATHING FACILITIES, AND SHOWER ROOMS

TAS SECTION 4.23.8 – BATHING AND SHOWER FACILITIES

A. In addition to the requirements of 4.22. toilet rooms :
If tubs and showers are provided, then at least one accessible tub that complies with 4.20 or at least one accessible shower that complies with 4.21 shall be provided

4.24 – SINKS

TAS SECTION 4.24.2 – HEIGHT

A. Sinks shall be mounted with the rim or counter surface no higher than 34" above the finished floor.

TAS SECTIONS 4.24.3 – KNEE CLEARANCE

A. Knee clearance of 27" high minimum, 30" wide minimum, and 19" deep minimum shall be provided underneath sinks.

TAS SECTION 4.24.4 – DEPTH

A. Each sink shall be a maximum of 6–1/2" deep.

TAS SECTION 4.24.6 – EXPOSED PIPES AND SURFACES

A. Hot water and drain pipes under sinks shall be insulated or otherwise configured to protext against contact.

B. There shall be no sharp or abrasive surfaces under sinks.

TAS SECTIONS 4.24.7, 4.27.4 – FAUCETS

A. Controls shall be operable with one hand and shall not require tight grasping, pinching, or twisting of the wrist.

B. The force required to activate controls shall be no greater than 5 lbf.

C. Lever-operated, push-type, and electronically controlled mechanisms are examples of acceptable designs.

D. If self-closing valves are used the faucet shall remain open for at least 10 seconds.

4.25 – STORAGE

TAS SECTION 4.25.1 – DEPTH (REFERENCE DETAIL 4.25.1)

A. Storage areas may be 36" in depth or less. If more than 36" in depth then area must allow 60" diameter of clear floor space for turning.

TAS SECTION 4.25.2 – CLEAR FLOOR SPACE: (REFERENCE DETAIL 4.25.2)

TAS SECTION 4.25.3 – HEIGHT (REFERENCE DETAIL 14.3 AND 4.25.3 & 4.25.4)

A. Where a forward reach is required, accessible storage spaces shall be 48" maximum and 15" minimum above the floor. If the forward reach is over an obstruction (with knee space equal to or greater than reach distance) 20"–25" deep, the maximum height shall be 44"; if the obstruction is less than 20", maximum height shall be 48".

B. Where a side reach is provided, accessible storage spaces shall be 54" maximum and 9" minimum above the floor. Maximum height shall be 46" for side reach over an obstruction 34" maximum high and 24" maximum deep.

C. Clothes rods or shelves shall be a maximum 54" above floor where a side reach is required.

D. Where the distance from the wheelchair to the clothes rod or shelf exceeds 10" (as at closets with inaccessible doors) the following criteria shall be met:

1. Shelves: Reach: 21" maximum; height: 48" maximum, 9" minimum.

2. Clothes rods: reach 21" maximum; height: 48" maximum.

TAS SECTIONS 4.25.4, 4.27.4 – HARDWARE

A. Hardware for accessible storage facilities shall be operable with one hand and shall not require tight grasping, pinching, or tisting of the wrist.

B. The force required to activate the hardware shall be no greater than 5 lbf

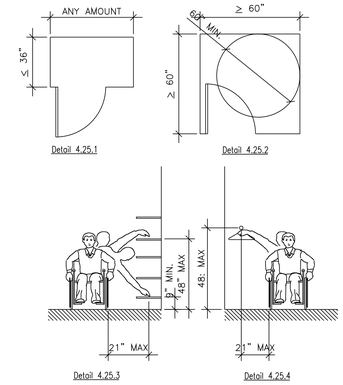

4.26 – GRAB BARS

TAS SECTION 4.26.2 – SIZE AND SPACING

A. Diameter or width of gripping surface shall be 1–1/4" to 1–1/2", or the shape shall provide an equivalent gripping surface.

1. The space between grab bars and adjacent walls shall be 1–1/2"

TAS SECTION 4.26.3 – STRUCTURAL STRENGTH

A. Grab bars and mounting devices shall meet the following requirements:

1. Bending stress induced by maximum bending moment from application of 250 lbf shall be less than allowable stress for material used.

2. Shear stress induced by application of 250 lbf shall be less than allowable shear stress for material used. If connection between grab bar and mounting bracket is considered to be fully restrained, then direct and torsional shear stresses shall be totaled for the combined shear stress, which shall not exceed the allowable shear stress.

3. Shear force induced in a fastener or mounting device from application of 250 lbf shall be less than allowable lateral load of either the fastener or mounting device or the supporting structure, whichever is the smaller allowable load.

4. Tensile force induced in a fastener by a direct tension force of 250 lbf plus the maximum moment from the application of 250 lbf shall be less than the allowable withdrawal load between the fastener and the supporting structure.

5. Grab bars shall not rotate within their fittings.

TAS SECTION 4.26.4 – ELIMINATING HAZARDS

A. Grab bars and adjacent wall surfaces shall be free of sharp or abrasive surfaces.

B. Edges shall have a radius of 1/8" minimum.

4.27 – CONTROLS AND OPERATING MECHANISMSS

TAS SECTION 4.27.3 – HEIGHT (REFERENCE DETAIL 4.30.3)

A. Front approach – 48" max. to 15" min.
Controls located in an alcove >24" deep must have 36" clear floor width.

B. Side approach – 54" max. to 9" min., except per below.

C. Electrical & communication system recepticals shall be mounted no less than 15" above the floor.

4.28 – ALARMS

TAS SECTION 4.28.1 – GENERAL

A. When required, visual alarms shall be provided in each of the following areas, as a minimum: restrooms and any other general usage areas (e.g., meeting rooms), hallways, lobbies, and any other area for common use.

TAS SECTION 4.28.2 – AUDIBLE ALARMS

A. If provided, audible alarms shall produce a sound that exceeds the prevailing equivalent sound level in the room or space by at least 15 dba or exceeds any maximum sound level with a duration of 60 seconds by 5 dba, whichever is louder.

B. Sound levels for alarm signals shall not exceed 120 dba.

TAS SECTION 4.28.3 – VISUAL ALARMS

A. Visual alarm signal appliances shall be integrated into the building or facility alarm system. If single station audible alarms are provided then single station visual alarm signals shall be provided.

Visual Alarm appliances shall have the following features:

1. The lamp shall be a xenon strobe type or equivalent.

2. The color shall be clear or nominal white (i.e. unfiltered or clear filtered white light).

3. The maximum pulse duration shall be two-tenths of one second with a maximum duty cycle of 40%. (The pulse duration is defined as the time interval between initial and final points of 10% of max signal)

4. The intensity shall be a minimum of 75 candela.

5. The flash rate shall be a minimum of 1 Hz and a maximum of 3 Hz

6. The appliance shall be placed 80" above the highest floor level within the space or 6" below the ceiling, whichever is lower.

7. In general, no place in any room or space shall be more than 50' from the signal (measured in a horizontal plane).

a. In large rooms and spaces exceeding 100' across, without obstructions 6' above the finished floor, such as auditoriums, devices may be place around the perimeter, spaced a maximum 100' apart, in lieu of suspending appliances from the ceiling.

8. No place in common corridors or hallways shall be more than 50' from the signal.

4.30 – SIGNAGE

TAS SECTIONS 4.1.2(7), 4.1.3(16)(a) – WHERE APPLICABLE

A. Signs which designate permament rooms and spaces shall comply with the requirements listed below for:

1. Raised and Braille Characters, and Pictograms

2. Finish and Contrast

Exception: Employee name signs are not required to comply.

TAS SECTIONS 4.1.2(7), 4.1.3(16)(b) – WHERE APPLICABLE

A. Signs which provide direction to, or information about, functional spaces of the building shall comply with the requirements listed below for:

1. Character Proportion

2. Character Height

3. Finish and Contrast

Exception: Building directories, menus, and all other signs which are temporary are not required to comply.

TAS SECTION 4.1.2(7) – WHERE APPLICABLE (REFERANCE DETAIL 4.30.1)

A. Element and spaces of accessible facilities which shall be identified by the International Symbol of Accessibility are:

1. Parking spaces designated as reserved for persons with disabilities.

2. Accessible passenger loading zones.

3. Accessible entrances when not all are accessible (inaccessible entrances shall have directional signage to indicate route to nearest accessible entrance).

4. Accessible toilet and bathing facilities when not all are accessible.

TAS SECTION 4.30.2 – CHARACTER PROPORTION (REFERENCE DETAIL 4.30.2)

A. Letters and numbers on signs shall have a width-to-height ratio between 3:5 and 1:1, and a stroke-width-to-height ratio between 1:5 and 1:10.

TAS SECTION 4.30.3 – OVERHEAD SIGNS

A. Characters and numbers on overhead signs shall be sized according to the viewing distance from which they are to be read.

1. For signs higher than 80" above the finished floor, character size shall be 3" minimum.

2. The minimum height is measured using an upper case X.

3. Lower case letters are permitted.

TAS SECTION 4.30.4 – RAISED AND BRAILLE CHARCTERS AND PICTOGRAMS

A. Letter and numerals shall be raised 1/32", upper case, sans serif and shall be accompanied by grade 2 Braille.

1. Raised character height: 5/8" minimum, 2" high maximum

2. Pictograms shall be accompanied by the equivalent verbal description placed directly below the pictogram.

3. The border dimension of the pictogram shall be 6" minimum

TAS SECTION 4.30.5 – FINISH AND CONTRAST

A. The character and background of the signs shall be eggshell, matte, or other non-glare finish. Charcters and symbols shall contrast with their background (either light characters on a dark background or dark characters on a light background).

TAS SECTION 4.30.6 – MOUNTING LOCATION AND HEIGHT (REFERENCE DETAIL 4.30.3)

A. Where permanent identification is provided for rooms and spaces, signs shall be installed on the wall adjacent to the latch side of the door.

B. Where there is no wall space to the latch side of the door, including at double-leaf doors, signs shall be placed on the nearest adjacent wall.

C. Mounting height shall be 60" above the finished floor to the centerline of the sign.

D. Mounting location for such signage shall be so that a person may approach within 3" of signage without encountering protruding objects or standing within the swing of a door.

International Symbol of Accessibilty

Detail 4.30.1

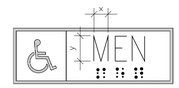

Letter & numbers on signs shall have a width to height ratio of between 3:5 & 1:1 and a stroke – width to height ratio between 1:5 & 1:10. Letters and numbers shall be raised 1/32", upper case, sans serif or simple serif type and shall be accompanied with grade 2 Braille, raised characters shall be at least 5/8" high, but no higher than 2".

Detail 4.30.2

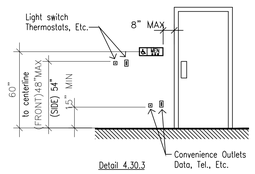

Detail 4.30.3

4.31 – PUBLIC TELEPHONES

TAS SECTION 4.1.3(17)(a) – WHERE APPLICABLE

A. If public pay telephones, public closed circuit telephones, or other public telephones if provided, then they shall comply with this section in the quantities below:

1. If one or more single unit of a type of public telephone is provided on a floor, then at least one of those phones shall comply with this section.

2. If one bank (defined as two or more adjacent public telephones, often installed as a unit) of a type of telephone is provided on a floor, then at least one of the telephones at the bank shall comply with this section.

3. If two or more banks of a type of public telephone are provided on a floor, then at least one telephone per bank shall comply with this section. The accessible unit may be installed as a single unit in proximity (either visible or with signage) to the bank. At least one public telephone per floor shall meet the requirements for a forward reach telephone.

Additional public telephones may be installed at any height.

Unless otherwise specified, accessible telephones may be either forward or side reach telephones.

TAS SECTION 4.1.3(17)(b) – WHERE APPLICABLE

A. All telephones required to be accessible shall be equipped with a volume control.

B. In addition, 25%, but never less than one, of all other public telephones provided shall be equipped with a volume control and shall be dispersed all type of telephones, including closed cirult telephones, throughout the building or facility.

C. Signage displaying the International Symbol of Access for Hearing Loss shall be provided at each telephone equipped with a volume control.

TAS SECTION 51.3 – MOUNTING HEIGHT (REFERENCE DETAIL 4.31)

A. The highest operable part of the telephone shall be 48" maximum above the floor where a forward reach is required, and 54" maximum where a side reach is required.

B. If the forward reach is over an obstruction (with knee space equal to or greater than reach distance) 20"–25" deep the maximum height shall be 44"; if the obstruction is less than 20", maximum height shall be 48"

C. Maximum height shall be 46" for side reach over an obstruction 34" maximum high and 24" maximum deep.

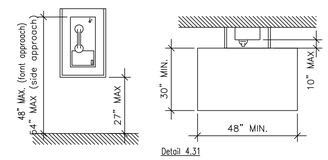

Detail 4.31

4.32 – SEATING AND TABLES

TAS SECTION 4.32.2 – SEATING

A. If seating spaces for people in wheelchairs are provided at fixed tables or counters, clear floor space of 30" x 48" shall be provided. Floor space shall not overlap required knee space by more than 19"

TAS SECTION 4.32.3 – KNEE SPACE

B. If seating for people in wheelchairs is provided at fixed tables or counters, knee space at least 27" high, 30" wide and 19" deep shall be provided.

TAS SECTION 4.32.4 – HEIGHT OF TABLES OR COUNTER

C. The tops of accessible tables and counters shall be 28" minimum, and 34" maximum, above the finished floor.

4.34 – AUTOMATIC TELLER MACHINES

TAS SECTIONS 4.34.2 – CLEAR FLOOR SPACE

A. Floor space shall comply with 4.2.4 to allow a forward, parallel approach or both.

TAS SECTIONS 4.34.3 – REACH RANGES

A. Forward approach only: controls within forward approach specified in 4.2.5.

B. Parallel approach: controls within unobstructed reach range from clear floor space at protrusion of teller machinr surround per table as follows:

Reach Depth	Maximum Height	Reach Depth	Maximum Height	Reach Depth	Maximum Height
in inches	in inches	in inches	in inches	in inches	in inches
10 or less	54	15	51	20	48 1/2
11	53 1/2	16	50 1/2	21	47 1/2
12	53	17	50	22	47
13	52 1/2	18	49 1/2	23	46 1/2
14	51 1/2	19	49	24	46

Note : above does not apply to drive up machines.

4.35 DRESSING AND FITTING ROOMS

TAS SECTIONS 4.35.2

A. Clear floor area with a 60" dia. wheelchair turnaround is required. The turnaround area must be clear of door swings.

TAS SECTIONS 4.35.4 – BENCH

A. Every accessible dressing room shall have a 24"x 48" bench fixed to the wall along the larger dimension. The bench shall be mounted 17" to 19" above the finish floor.

TAS SECTIONS 4.35.5 – MIRROR

A. A full-length mirror, measuring at least 18" wide by 54" high, shall be mounted in a position affording a view to a person on the bench as well as to a person in a standing position.

No.	REVISIONS	BY

GMS ARCHITECTS
1150 Paredes Line Rd.
Brownsville TX 78526
(956) 546-0110
fax (956) 546-0196

BISD Hanna ECHS Gymnasium Facility

REGISTERED ARCHITECT DAVID A. MONREAL 19556 STATE OF TEXAS
6-14-2019

© Copyright 2019
Gomez Mendez Saenz Inc.
Architects-Planners
Interior Designers

Date: JUNE, 2019
Scale: As Noted
Project Architect: David Monreal, AIA
Drawn By: RB
Job No. BISD Hanna Gymnasium
Sheet: G1.01

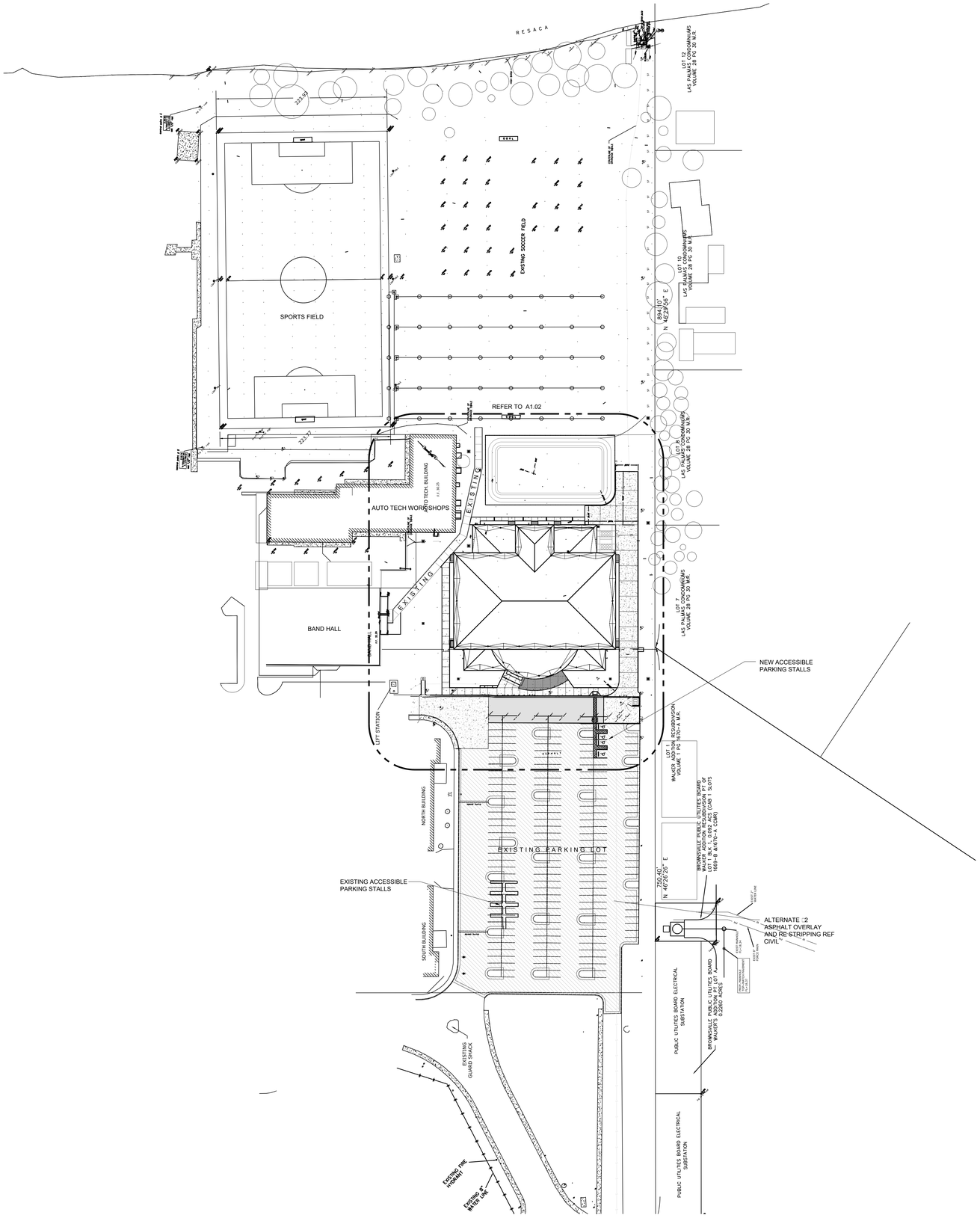

01 OVERALL SITE PLAN
SCALE : 1=60

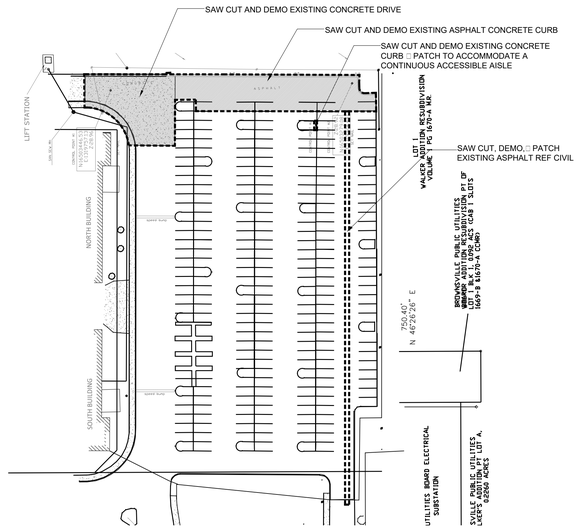

02 SITE PLAN DEMO
SCALE : 1=60

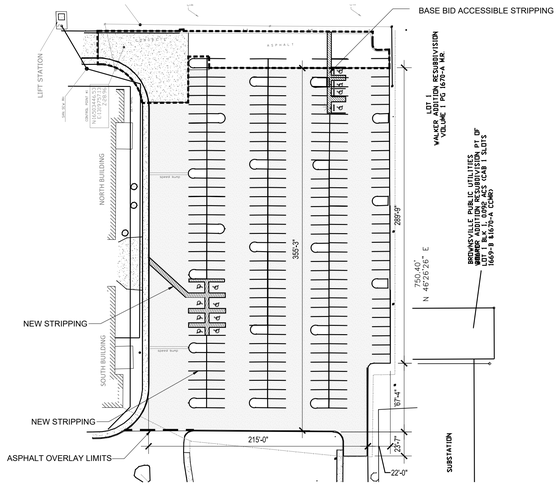

03 ALTERNATE #2 PARKING LOT PLAN
SCALE : 1=60

NOTE: PROVIDE PARKING STALL STRIPPING AND ACCESSIBLE STALL STRIPPING AS SHOWN

No.	REVISIONS	BY

GMS ARCHITECTS
1150 Paredes Line Rd.
Brownsville TX 78526
(956) 546-0110
fax (956) 546-0196

BISD Hanna ECHS Gymnasium Facility

REGISTERED ARCHITECT DAVID A. MONREAL 19556 STATE OF TEXAS
6-14-2019

© Copyright 2019
Gomez Mendez Saenz Inc.
Architects-Planners
Interior Designers

Date:	JUNE, 2019
Scale:	As Noted
Project Architect:	David Monreal, AIA
Drawn By:	RB
Job No.	BISD Hanna Gymnasium
Sheet:	A1.01

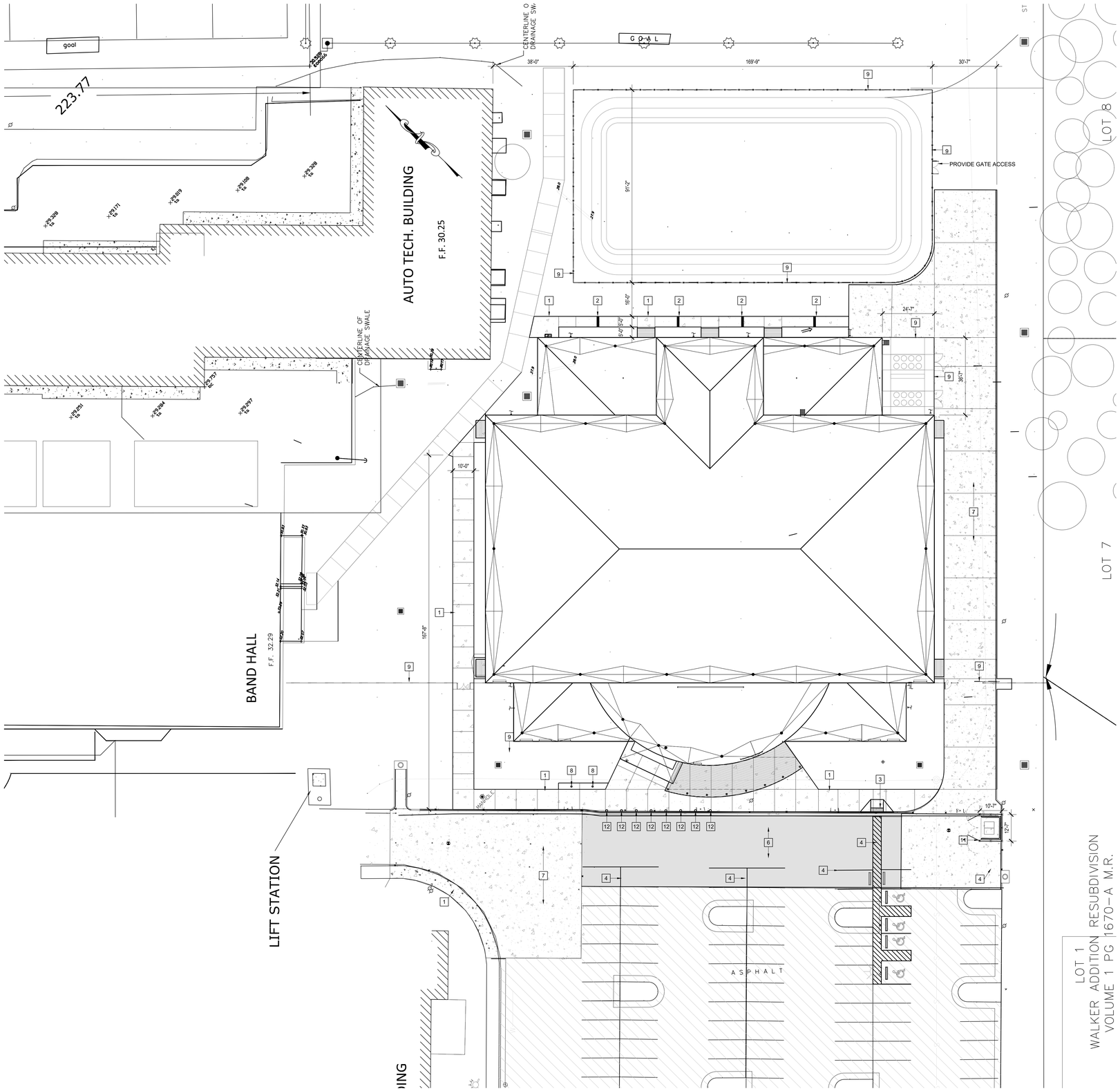

01 SITE PLAN W/ IMPROVEMENTS

SCALE : 1/8"=1'-0"

SITE NOTES:

1. FINISH GRADE TO BE 6" BELOW FINISH FLOOR ELEVATION SLOPE AWAY FROM ALL IMPROVEMENTS AT A RATE OF 1/4" PER FOOT FOR THE FIRST 10'-0".,THEN AT A RATE OF 1/8" PER FOOT FOR THE NEXT 20'-0"
2. SIDE WALK SLOPE IS NOT TO EXCEED 1:20 WITH A CROSS SLOPE OF 1:50 AT ANY INSTANCE.
3. REFER TO CIVIL, LANDSCAPE AND MECHANICAL DRAWINGS FOR ADDITIONAL WORK TO BE PERFORMED UNDER THIS CONTRACT.
4. AT ALL ENTRIES OF NEW BUILDINGS WARP CONCRETE SIDEWALKS SO AS TO PROVIDE A FLAT SURFACE WITH FINISHED FLOOR
5. PROVIDE EXPANSION JNT MATERIAL AT ALL SIDEWALK AND FOUNDATION TRANSITIONS

KEYED NOTES

DETAIL		
01,02/A1.03 04,05/A1.03	1	CONCRETE WALK REFER TO DTL'S
03/A1.03	2	METAL TRENCH COVERS. REFER TO DTL. (1'-0" WIDE)
09/A1.03	3	ACCESSIBLE CURB RAMP AT 1:12
	4	PAINT STRIPING TRAFFIC FOR PEDESTRIAN CROSSWALKS, LOADING ZONE AND TRAFFIC CONTROL. PROVIDE FIRE LANE STRIPPING TO BE LOCATED BY FIRE MARSHALL
07/A1.04	5	ACCESSIBLE PARKING SPACE WITH POLE MOUNTED SIGN SHOWING INTERNATIONAL SYMBOL OF ACCESSIBILITY. REFER TO 10/A1.03.
REF CIVIL	6	ASPHALT PAVING WITH CONCRETE CURB AND GUTTER. REFER TO CIVIL FOR ADDITIONAL INFORMATION.
REF CIVIL	7	CONCRETE PAVING WITH CONCRETE CURB AND GUTTER. REFER TO CIVIL FOR ADDITIONAL INFORMATION.
07/A1.03	8	30'-0" FLAGPOLE AS SPECIFIED.
12,13/A1.03	9	6'-0" HD GALV. CHAIN LINK FENCE WITH • (1) - 3' WIDE PEDESTRIAN GATES AND LOCKING MECHANISM • (3) - DOUBLE 4'-0" WIDE GATE (8' OPEN) WITH LOCKING MECHANISM AND FOOT BOLTS AS SHOWN • (1) - 15' WIDE SLIDING GATE WITH HEAVY DUTY WHEELS.
06/A1.03	10	CONCRETE TIRE STOP
08/A1.03	11	6'-0" TALL CEDAR FENCING WITH DOUBLE SWINGING GATE.
06/A1.3	12	3'-0" TALL PIPE BOLLARD

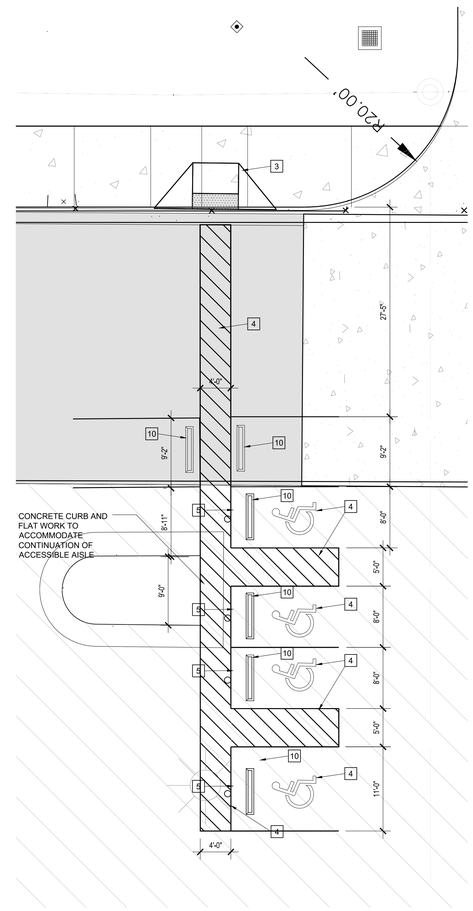

02 SITE ENLARGEMENT

SCALE : 1/8" =1'-0"

No.	REVISIONS	BY

GMS ARCHITECTS
1150 Paredes Line Rd.
Brownsville TX 78526
(956) 546-0110
fax (956) 546-0196

BISD Hanna ECHS
Gymnasium Facility

REGISTERED ARCHITECT DAVID A. MONREAL 78556 STATE OF TEXAS
6-14-2019

© Copyright 2019
Gomez Mendez Saenz Inc.
Architects-Planners
Interior Designers

Date:	JUNE, 2019
Scale:	As Noted
Project Architect:	David Monreal, AIA
Drawn By:	RB
Job No.	BISD Hanna Gymnasium
Sheet:	A1.02

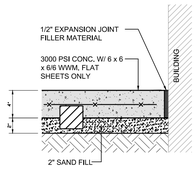

05 SIDEWALK DETAIL
SCALE: 1-1/2" = 1'-0"

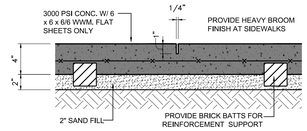

01 SIDEWALK CONTROL JT.
SCALE: 1-1/2"=1'-0"

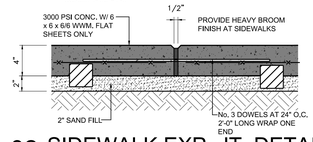

02 SIDEWALK EXP. JT. DETAIL
SCALE: 1-1/2"=1'-0"

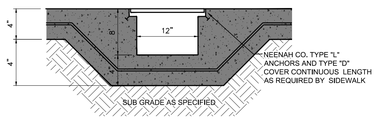

03 TRENCH DETAIL
SCALE 1 1/2" = 1'-0"

1.) CONTRACTOR TO VERIFY ALL BUILDING ROOF DRAINS & DOWN SPOUTS THAT WILL SPILL ONTO A SIDEWALK AND PROVIDE A TRENCH GUTTER AT THAT LOCATION TO ALLOW FOR RAIN WATER TO DRAIN THRU GUTTER AND NOT OVER SIDEWALK (WHICH COULD CAUSE A TRIPPING HAZARD). CONTRACTOR TO VERIFY TRENCH GUTTERS NEEDED PRIOR TO ANY POURING OF SIDEWALKS AROUND PERIMETER OF BUILDING. TYPICAL AT ALL BUILDINGS.

2.) REFER TO CIVIL DRAWINGS FOR ALL OTHER LOCATIONS OF TRENCH GUTTERS

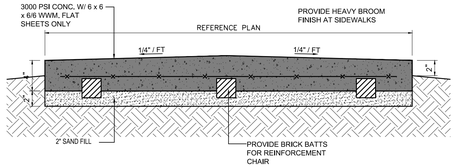

04 SIDEWALK DETAIL
SCALE: 1-1/2" = 1'-0"

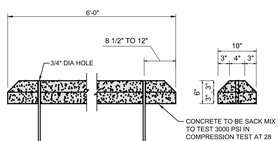

06 CONCRETE TIRE STOP
SCALE: 1-1/2" = 1'-0"

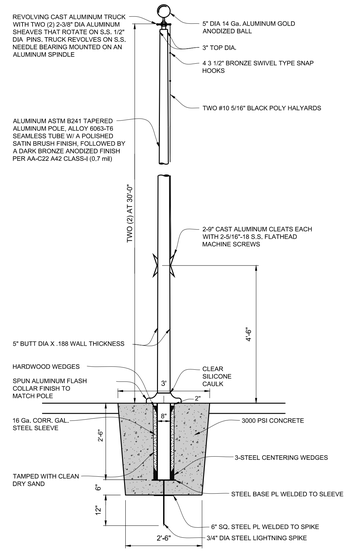

07 FLAG POLE DETAIL
SCALE : NTS

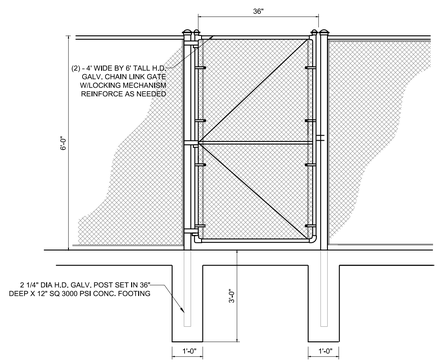

12 CHAIN LINK FENCE GATE
SCALE : NTS

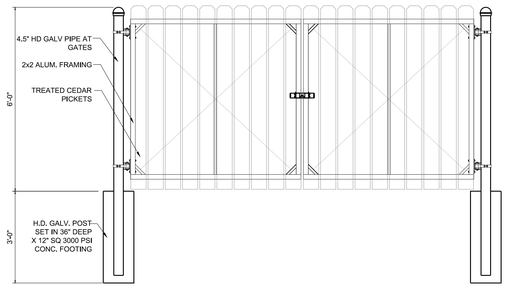

11 WOOD FENCE DETAIL
SCALE : 1/2" = 1'-0"

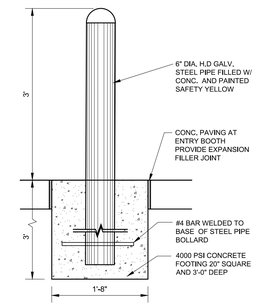

08 STEEL BOLLARD DETAIL
SCALE: 1" = 1'-0"

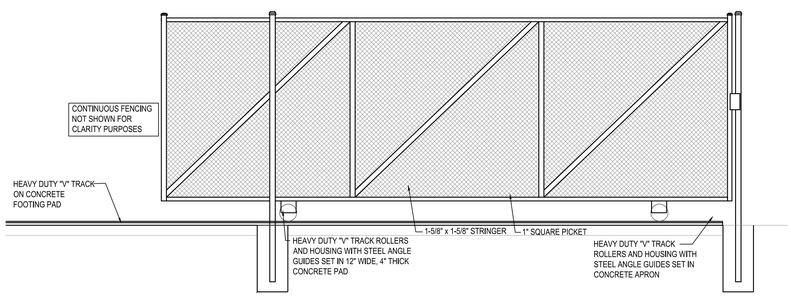

13 SLIDING GATE ELEVATION
SCALE: 1/2"=1'-0"
NOTES:
1. INSTALLATION TO BE COMPLETED IN ACCORDANCE WITH MANUFACTURER'S SPECIFICATIONS.
2. ALL DIMENSIONS ARE CONSIDERED TRUE AND REFLECT MANUFACTURER'S SPECIFICATIONS.

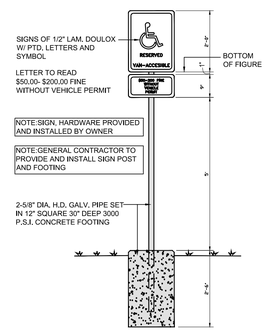

10 SIGN ANCHOR DETAIL
SCALE : 1/2" = 1'-0"

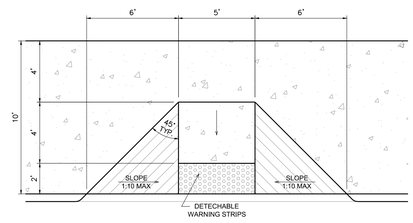

09 ACCESSIBLE RAMP ENLARGEMENT
SCALE: 1/4"=1'-0"

No.	REVISIONS	BY

GMS ARCHITECTS
1150 Paredes Line Rd.
Brownsville TX 78526
(956) 546-0110
fax (956) 546-0196

BISD Hanna ECHS
Gymnasium Facility

REGISTERED ARCHITECT DAVID A. MONREAL 19556 STATE OF TEXAS
6-14-2019

© Copyright 2019
Gomez Mendez Saenz Inc.
Architects-Planners
Interior Designers

Date: JUNE, 2019
Scale: As Noted
Project Architect: David Monreal, AIA
Drawn By: RB
Job No. BISD Hanna Gymnasium
Sheet: A1.03

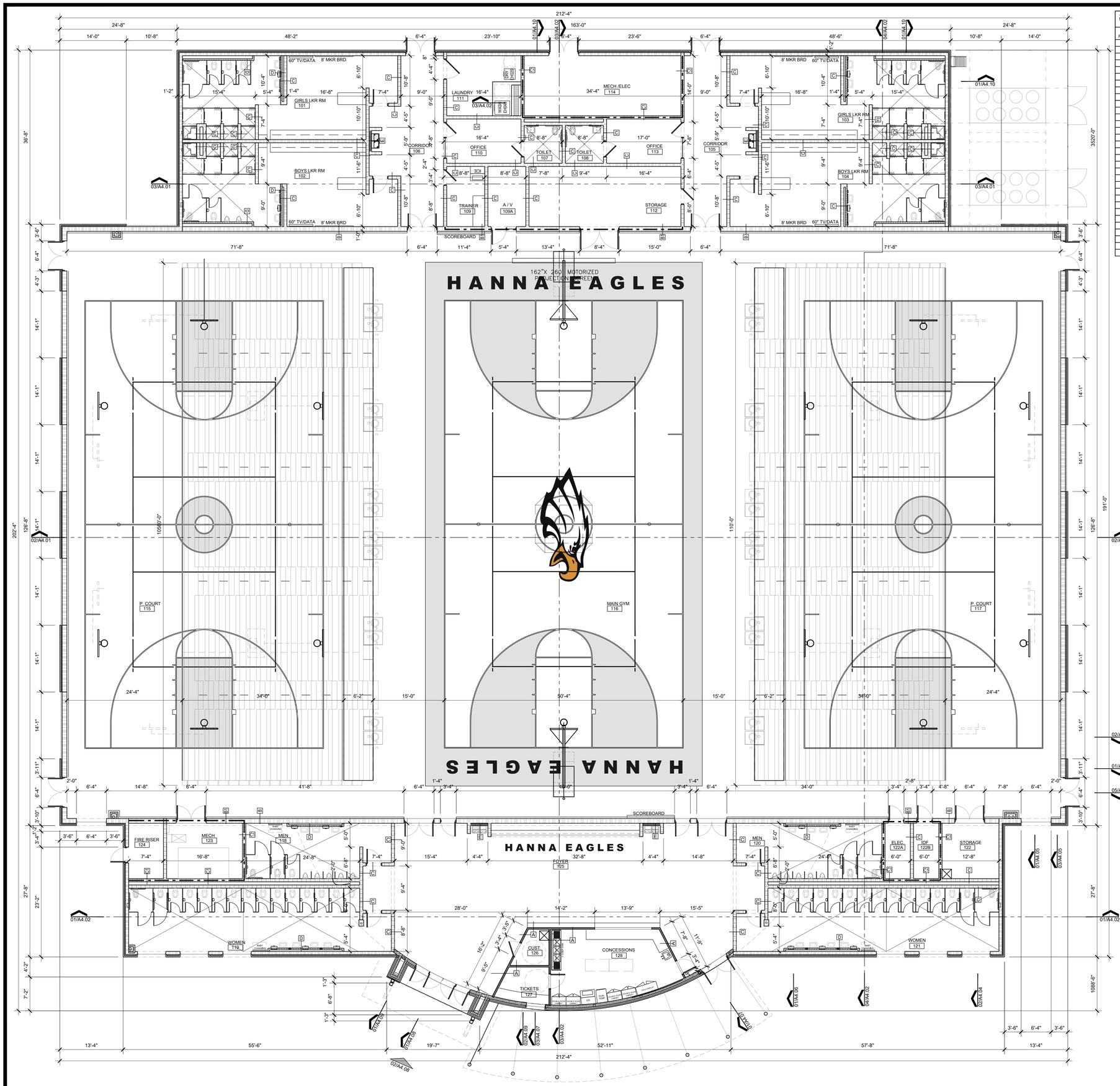

ROOM FINISH SCHEDULE

ALL WALLS TO BE PAINTED UNLESS NOTED OTHERWISE

THIS SCHEDULE BASED ON PLAN NORTH ORIENTATION

ROOM	ROOM NAME	BASE	FLR.	WALLS N	WALLS S	WALLS E	WALLS W	CLG.	CLG. HEIGHTS	REMARKS
101	GIRLS LOCKER ROOM	RUBBER	RT	CMU/PTD	CMU/PTD	CMU/PTD	CMU/PTD	GYP/PTD	9'-0"	
102	BOYS LOCKEROOM	RUBBER	RT	CMU/PTD	CMU/PTD	CMU/PTD	CMU/PTD	GYP/PTD	9'-0"	
103	GIRLS LOCKER ROOM	RUBBER	RT	CMU/PTD	CMU/PTD	CMU/PTD	CMU/PTD	GYP/PTD	9'-0"	
104	BOYS LOCKEROOM	RUBBER	RT	CMU/PTD	CMU/PTD	CMU/PTD	CMU/PTD	GYP/PTD	9'-0"	
105	CORRIDOR	RUBBER	VCT	CMU/PTD	CMU/PTD	CMU/PTD	CMU/PTD	SAC	9'-0"	
106	CORRIDOR	RUBBER	VCT	CMU/PTD	CMU/PTD	CMU/PTD	CMU/PTD	SAC	9'-0"	
107	TOILET	CT	CT	CMU/PTD	CMU/PTD	CMU/PTD	CMU/PTD	SAC	9'-0"	6'-0" CT WAINSCOT
108	TOILET	CT	CT	CMU/PTD	CMU/PTD	CMU/PTD	CMU/PTD	SAC	9'-0"	6'-0" CT WAINSCOT
109	TRAINER	RUBBER	VCT	CMU/PTD	CMU/PTD	CMU/PTD	CMU/PTD	SAC	9'-0"	
109A	AUDIO VISUAL	RUBBER	VCT	CMU/PTD	CMU/PTD	CMU/PTD	CMU/PTD	SACII	9'-0"	
110	OFFICE	RUBBER	VCT	CMU/PTD	CMU/PTD	CMU/PTD	CMU/PTD	SAC	9'-0"	
111	LAUNDRY	RUBBER	VCT	CMU/PTD	CMU/PTD	CMU/PTD	CMU/PTD	SAC	9'-0"	
112	STORAGE	RUBBER	VCT	CMU/PTD	CMU/PTD	CMU/PTD	CMU/PTD	SAC	9'-0"	
113	OFFICE	RUBBER	VCT	CMU/PTD	CMU/PTD	CMU/PTD	CMU/PTD	SAC	9'-0"	
114	MECHELEC	RUBBER	VCT	CMU/PTD	CMU/PTD	CMU/PTD	CMU/PTD			
115	PRACTICE COURT	RUBBER	WD	CMU/PTD	CMU/PTD	CMU/PTD	CMU/PTD			
116	MAIN COURT	RUBBER	WD	CMU/PTD	CMU/PTD	CMU/PTD	CMU/PTD			
117	PRACTICE COURT	RUBBER	WD	CMU/PTD	CMU/PTD	CMU/PTD	CMU/PTD			
118	MENS TOILETS	CT	CT	CMU/PTD	CMU/PTD	CMU/PTD	CMU/PTD	GYP/PTD	9'-0"	
119	WOMEN TOILETS	CT	CT	CMU/PTD	CMU/PTD	CMU/PTD	CMU/PTD	GYP/PTD	9'-0"	
120	MENS TOILETS	CT	CT	CMU/PTD	CMU/PTD	CMU/PTD	CMU/PTD	GYP/PTD	9'-0"	
121	WOMEN TOILETS	CT	CT	CMU/PTD	CMU/PTD	CMU/PTD	CMU/PTD	GYP/PTD	9'-0"	
122	STORAGE	RUBBER	VCT	CMU/PTD	CMU/PTD	CMU/PTD	CMU/PTD	SAC	9'-0"	
122A	ELECTRICAL		CONC	CMU/PTD	CMU/PTD	CMU/PTD	CMU/PTD			
122B	IDF	RUBBER	VCT	CMU/PTD	CMU/PTD	CMU/PTD	CMU/PTD	SACII	9'-0"	
123	MECHANICAL	RUBBER	VCT	CMU/PTD	CMU/PTD	CMU/PTD	CMU/PTD	SAC	9'-0"	
124	FIRE RISER		CONC	CMU/PTD	CMU/PTD	CMU/PTD	CMU/PTD			
125	FOYER	TERAZ	TERAZ	CMU/PTD	GYP/PTD	CMU/PTD	CMU/PTD	EXP/PTD		CLOUDS AS SPEC.
126	CUSTODIAN	RUBBER	VCT	GYP/PTD	GYP/PTD	GYP/PTD	GYP/PTD	SAC	9'-0"	
127	TICKETS	RUBBER	VCT	GYP/PTD	GYP/PTD	GYP/PTD	GYP/PTD	SAC	9'-0"	
128	CONCESSIONS	RUBBER	TERAZ	FRP	FRP	FRP	FRP	SACIII	9'-0"	SAC

F I N I S H L E G E N D :

RUBBER — RUBBER BASE
PTD — PAINTED
CMU/PTD — CONC. MASONRY UNIT PAINTED
GYP/PTD — GYPSUM BOARD PAINTED
CONC. — SEALED CONCRETE
MTL — METAL SOFFIT PANELS
C.T. — CERAMIC TILE BY DAL-TILE
FRP — FRP WALL PANEL
TERAZ — TERRAZO

W A L L T Y P E L E G E N D

3 4 — INDICATES 1HR FIRE RATED CMU WALL REFER TO INTERIOR PARTITION SECTIONS FOR ADDITIONAL INFORMATION (ABOVE CMU PROVIDE 5/8" TYPE X FIRE RATED GYP BRD EACH SIDE OF STUD AS NEEDED)

B — INDICATES 12" CMU WALL REFER TO INTERIOR PARTITION SECTIONS FOR ADDITIONAL INFORMATION

C — INDICATES 8" CMU WALL REFER TO INTERIOR PARTITION SECTIONS FOR ADDITIONAL INFORMATION

D — INDICATES 4" CMU WALL REFER TO INTERIOR PARTITION SECTIONS FOR ADDITIONAL INFORMATION

A — INDICATES 2X4 WOOD WALL REFER TO INTERIOR PARTITION SECTIONS FOR ADDITIONAL INFORMATION

E — INDICATES METAL STUD WALL REFER TO STRUCTURAL FOR ADDITIONAL INFORMATION

INDICATES METAL STUD :: BRICK WALL REFER TO STRUCTURAL FOR ADDITIONAL INFORMATION

01 FLOOR PLAN

SCALE : 1/8" = 1'=0"

G E N E R A L N O T E S:

1. REFERENCE **A4.00 SERIES** FOR WALL SECTIONS NOTED ON THIS PLAN.
2. PROVIDE MASONRY CONTROL JOINTS AS PER STRUCTURAL STRUCTURAL .
3. PROVIDE TRANSITION STRIPS AT ALL DISSIMILAR FLOOR CONDITIONS
4. REFERENCE FIXTURE PLANS SHEET FOR FIXTURES, ACCESSORY RE□UIREMENTS AND FLOOR TILE PATTERN LAYOUT
5. REFERENCE SHEET A3.01 FOR TOILET ENLARGEMENTS

No.	REVISIONS	BY

GMS ARCHITECTS
1150 Paredes Line Rd.
Brownsville TX 78526
(956) 546-0110
fax (956) 546-0196

BISD Hanna ECHS
Gymnasium Facility

REGISTERED ARCHITECT DAVID A. MONREAL 19556 STATE OF TEXAS
6-14-2019

© Copyright 2019
Gomez Mendez Saenz Inc.
Architects-Planners
Interior Designers

Date: JUNE, 2019
Scale: As Noted
Project Architect: David Monreal, AIA
Drawn By: RB
Job No. BISD Hanna Gymnasium
Sheet: A2.01

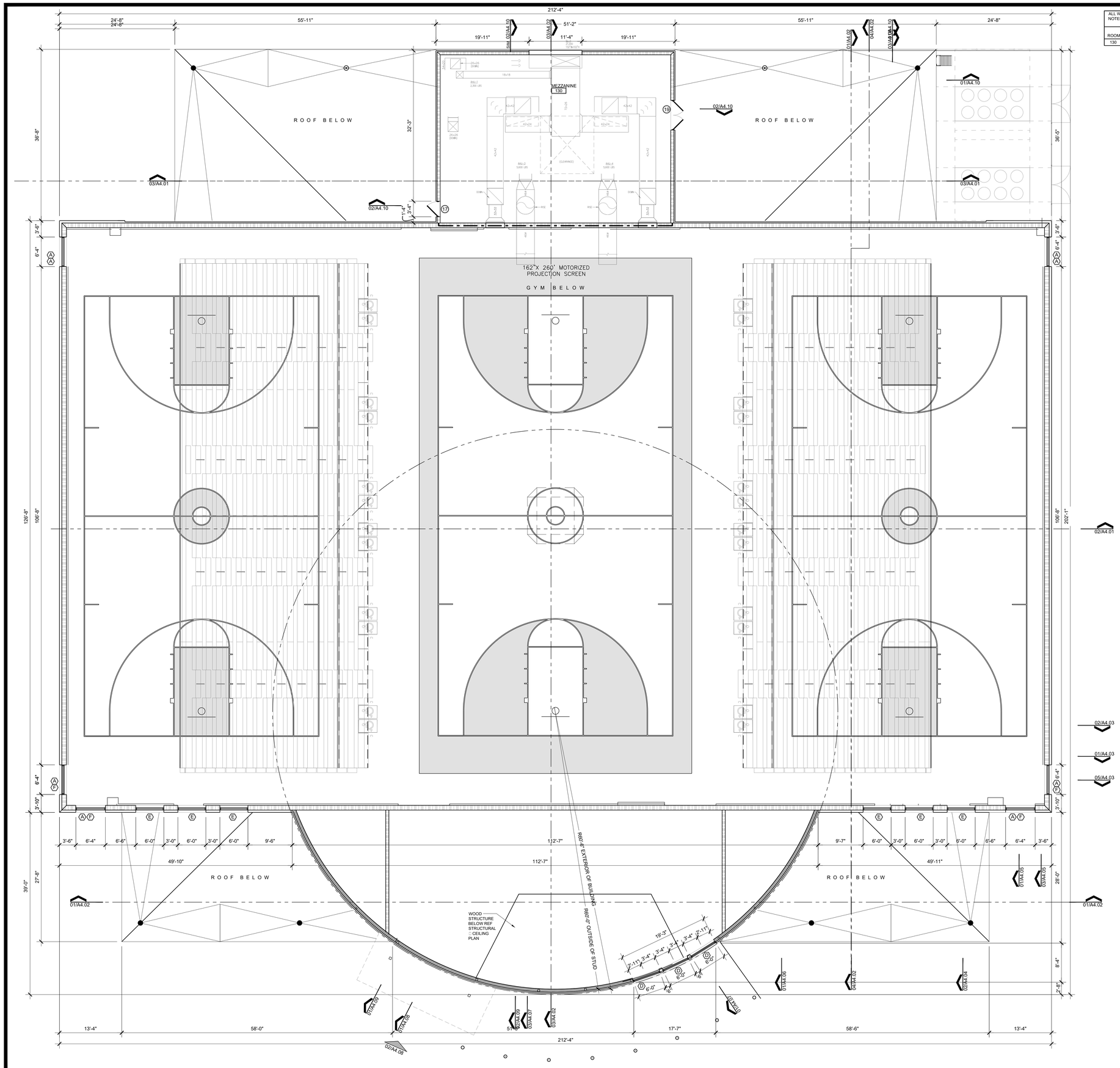

ALL WALLS TO BE PAINTED UNLESS NOTED OTHERWISE	ROOM FINISH SCHEDULE									THIS SCHEDULE BASED ON PLAN NORTH ORIENTATION
				WALLS						
ROOM	ROOM NAME	BASE	FLR.	N	S	E	W	CLG.	CLG. HEIGHTS	REMARKS
130	MEZZANINE		CONC.	CMU/PTD	CMU/PTD	CMU/PTD	CMU/PTD			

F I N I S H L E G E N D :

RUBBER ——— RUBBER BASE
PTD ——— PAINTED
CMU/PTD ——— CONC. MASONRY UNIT PAINTED
GYP/PTD ——— GYPSUM BOARD PAINTED
CONC. ——— SEALED CONCRETE
MTL ——— METAL SOFFIT PANELS
C.T. ——— CERAMIC TILE BY DAL-TILE
FRP ——— FRP WALL PANEL
TERAZ ——— TERRAZO

W A L L T Y P E L E G E N D

INDICATES 1HR FIRE RATED 8" CMU WALL REFER TO INTERIOR PARTITION SECTIONS FOR ADDITIONAL INFORMATION (ABOVE CMU PROVIDE 5/8" TYPE X FIRE RATED GYP BRD EACH SIDE OF STUD)

INDICATES 12" CMU WALL REFER TO INTERIOR PARTITION SECTIONS FOR ADDITIONAL INFORMATION

INDICATES 8" CMU WALL REFER TO INTERIOR PARTITION SECTIONS FOR ADDITIONAL INFORMATION

INDICATES 4" CMU WALL REFER TO INTERIOR PARTITION SECTIONS FOR ADDITIONAL INFORMATION

INDICATES METAL STUD □ BRICK WALL REFER TO STRUCTURAL FOR ADDITIONAL INFORMATION

INDICATES 2X4 WOOD WALL REFER TO INTERIOR PARTITION SECTIONS FOR ADDITIONAL INFORMATION

01 2nd Level FLOOR PLAN

SCALE : 1/8" = 1"=0"

G E N E R A L N O T E S:

1. REFERENCE **A4.00 SERIES** FOR WALL SECTIONS NOTED ON THIS PLAN.
2. PROVIDE MASONRY CONTROL JOINTS AS PER STRUCTURAL STRUCTURAL .
3. PROVIDE TRANSITION STRIPS AT ALL DISSIMILAR FLOOR CONDITIONS
4. REFERENCE FIXTURE PLANS SHEET FOR FIXTURES, ACCESSORY RE□UIREMENTS AND FLOOR TILE PATTERN LAYOUT
5. REFERENCE SHEET A3.01 FOR TOILET ENLARGEMENTS

No.	REVISIONS	BY

GMS ARCHITECTS
1150 Paredes Line Rd.
Brownsville TX 78526
(956) 546-0110
fax (956) 546-0196

BISD Hanna ECHS
Gymnasium Facility

REGISTERED ARCHITECT DAVID A. MONREAL 19556 STATE OF TEXAS
6.14.2019

© Copyright 2019
Gomez Mendez Saenz Inc.
Architects-Planners
Interior Designers

Date:	JUNE, 2019
Scale:	As Noted
Project Architect:	David Monreal, AIA
Drawn By:	RB
Job No.	BISD Hanna Gymnasium
Sheet:	A2.02

Jun 14, 2019 - 4:40pmC:\Users\Station-1\appdata\local\temp\AcPublish_3964\Hanna Gym_FP.dwg

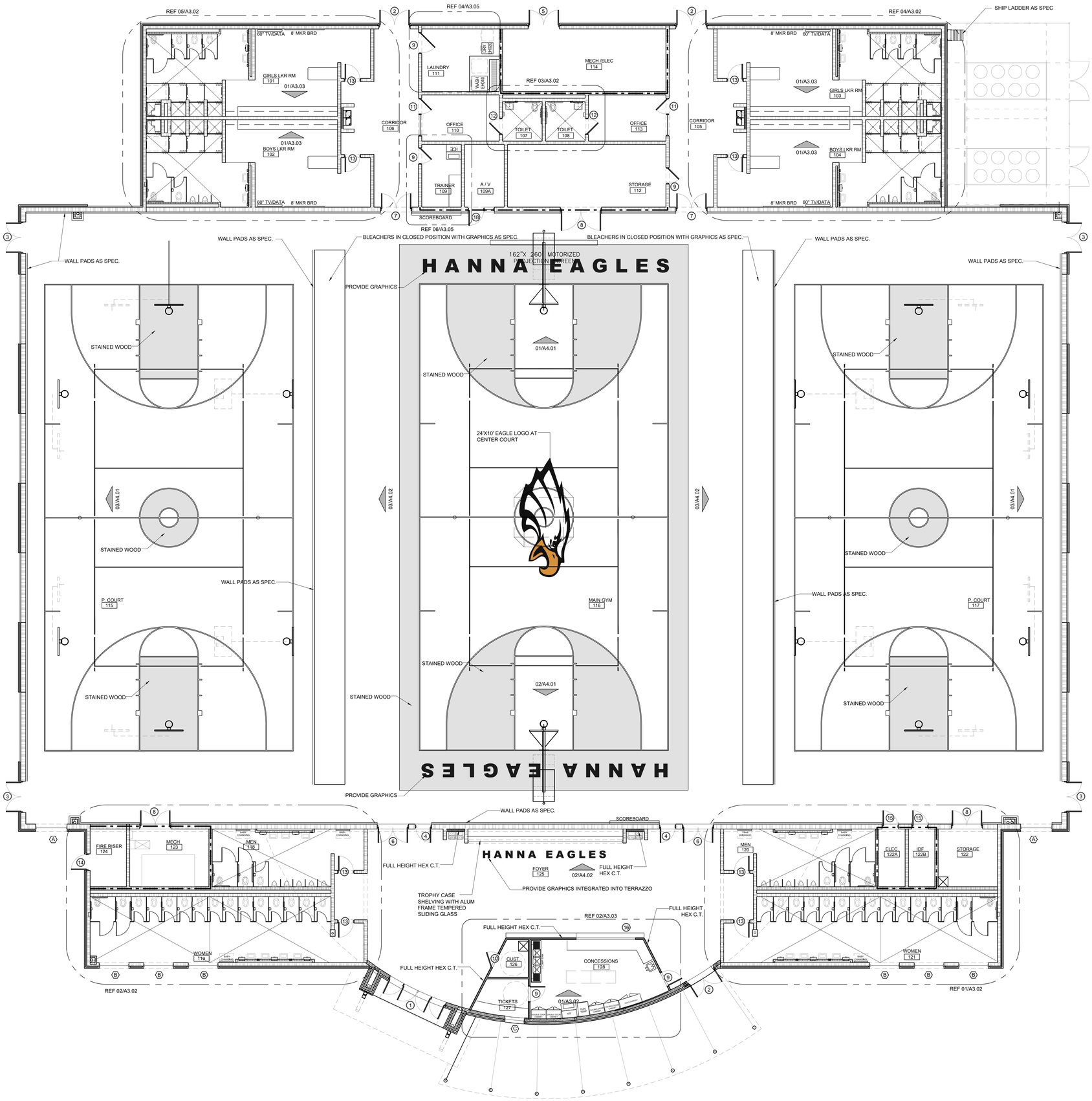

01 FIXTURE PLAN

SCALE : 1/8" = 1'=0"

NOTE: FEC INDICATES FIRE EXTINGUISHER PROVIDE TWO ADDITIONAL FIRE EXTINGUISHERS AS LOCATED BY ARCHITECT.

NOTE:
PROVIDE FOR THE FOLLOWING STRIPPED COURTS

- 3- FULL SIZE VOLLEYBALL COURTS
- 3- FULL SIZE BASKETBALL COURTS
- MAIN COURT CUSTOM GRAPHICS AT CENTER CIRCLE AND END COURT
- MAIN COURT STAINED BORDER AREA AND 3 POINT LANE AREA
- PRACTICE COURT STAINED FREE THROW LANE AREA'S
- PRACTICE COURT STAINED CENTER CIRCLE AREA'S
- 8 CROSS COURT FREE THROUGH HASH MARKS

NOTE: PROVIDE DIRECT ATTACH TECTUM PANELS AT WALLS REFERENCE SHEET A4.01 FOR ELEVATIONS

GENERAL NOTES:

1.) PROVIDE FOR TWO (2) FIRE EXTINGUISHERS AND CABINETS IN ADDITION TO THOSE SHOWN ON THIS PLAN - TO BE LOCATED AS PER ARCHITECT'S OFFICE.

2.) GENERAL CONTRACTOR TO CONTACT ARCHITECTS OFFICE IF ANY FLOOR TILE DESIGN IS UNCLEAR REGARDING SIZE, COLOR, OR LOCATION

3.) PROVIDE TRANSITION STRIPS AT ALL DISSIMILAR FLOOR CONDITIONS

4.) REFERENCE ROOM FINISH SCHEDULE ON SHEET A2.01 FOR ROOM FINISH INFORMATION

5.) PROVIDE FOR UP TO THREE VCT COLORS IN CORRIDORS AND WAITING.

6.) ALLOW FOR ONE ACCENT WALL IN EACH CLASSROOM, LAB, AND OFFICES

No.	REVISIONS	BY

GMS ARCHITECTS
1150 Paredes Line Rd.
Brownsville TX 78526
(956) 546-0110
fax (956) 546-0196

BISD Hanna ECHS
Gymnasium Facility

REGISTERED ARCHITECT DAVID A. MONREAL 19556 STATE OF TEXAS
6-14-2019

© Copyright 2019
Gomez Mendez Saenz Inc.
Architects-Planners
Interior Designers

Date: JUNE, 2019
Scale: As Noted
Project Architect: David Monreal, AIA
Drawn By: RB
Job No. BISD Hanna Gymnasium.
Sheet: A2.03

Jun 14, 2019 - 4:40pmC:\Users\Station-1\appdata\local\temp\AcPublish_3964\Hanna Gym_FP.dwg

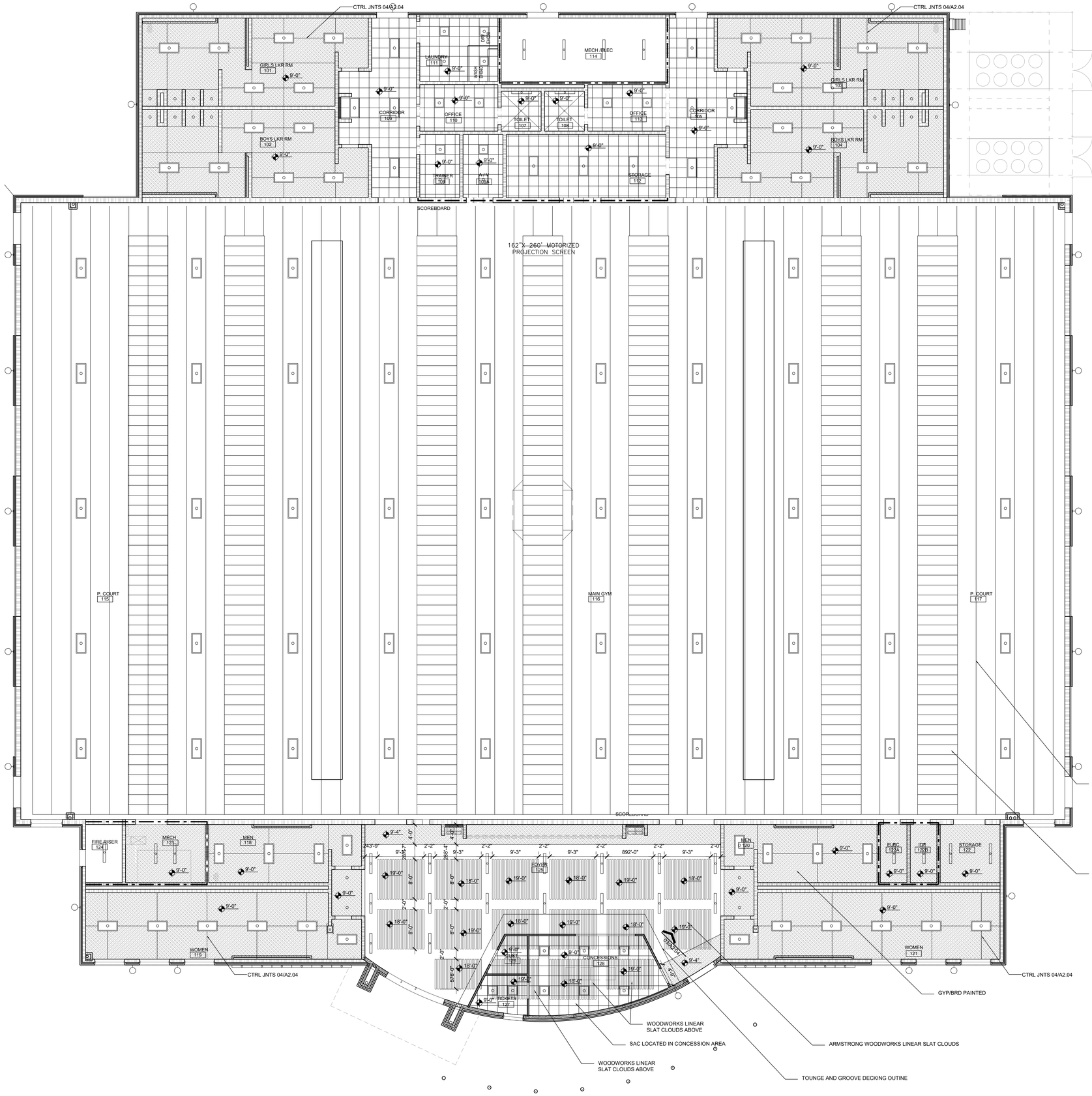

01 REFLECTED CEILING PLAN

SCALE : 1/8" = 1'-0"

NOTE: REFER TO ROOM FINISHED SCHEDULE FOR CEILING TYPES TO BE USED ON THIS PLAN

PROVIDE FOR ALL STRUCTURE INCLUDED BUT NOT LIMITED TO PIPING, CONDUITS AND ANY METAL SUPPORT OR ANCHORING TO BE PAINTED WITH TNEMEC PAINT SYSTEM

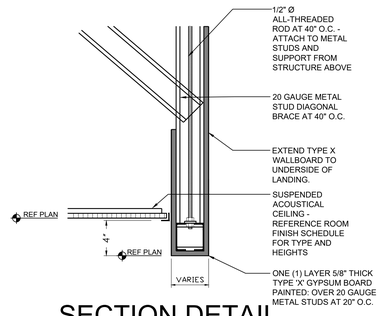

02 SECTION DETAIL

SCALE 1" = 1'-0"

NOTE: AT COOLER/FREZZER PROVIDE FURRDOWN DEPTH AS PER MFG. RE□UIREMENTS

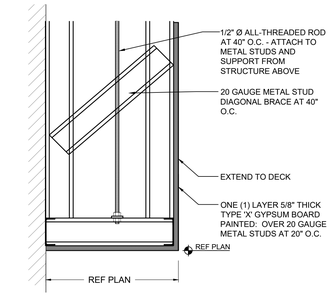

03 SECTION DETAIL

SCALE 1" = 1'-0"

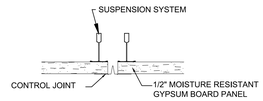

04 GYP BRD CTRL JNT

No.	REVISIONS	BY

GMS ARCHITECTS
1150 Paredes Line Rd.
Brownsville TX 78526
(956) 546-0110
fax (956) 546-0196

BISD Hanna ECHS
Gymnasium Facility

REGISTERED ARCHITECT DAVID A. MONREAL 78556 STATE OF TEXAS
6-14-2019

© Copyright 2019
Gomez Meindez Saenz Inc.
Architects-Planners
Interior Designers

Date:	JUNE, 2019
Scale:	As Noted
Project Architect:	David Monreal, AIA
Drawn By:	RB
Job No.	BISD Hanna Gymnasium
Sheet:	A2.04

Jun 14, 2019 - 4:40pmC:\Users\Station-1\appdata\local\temp\AcPublish_3964\Hanna Gym_FP.dwg

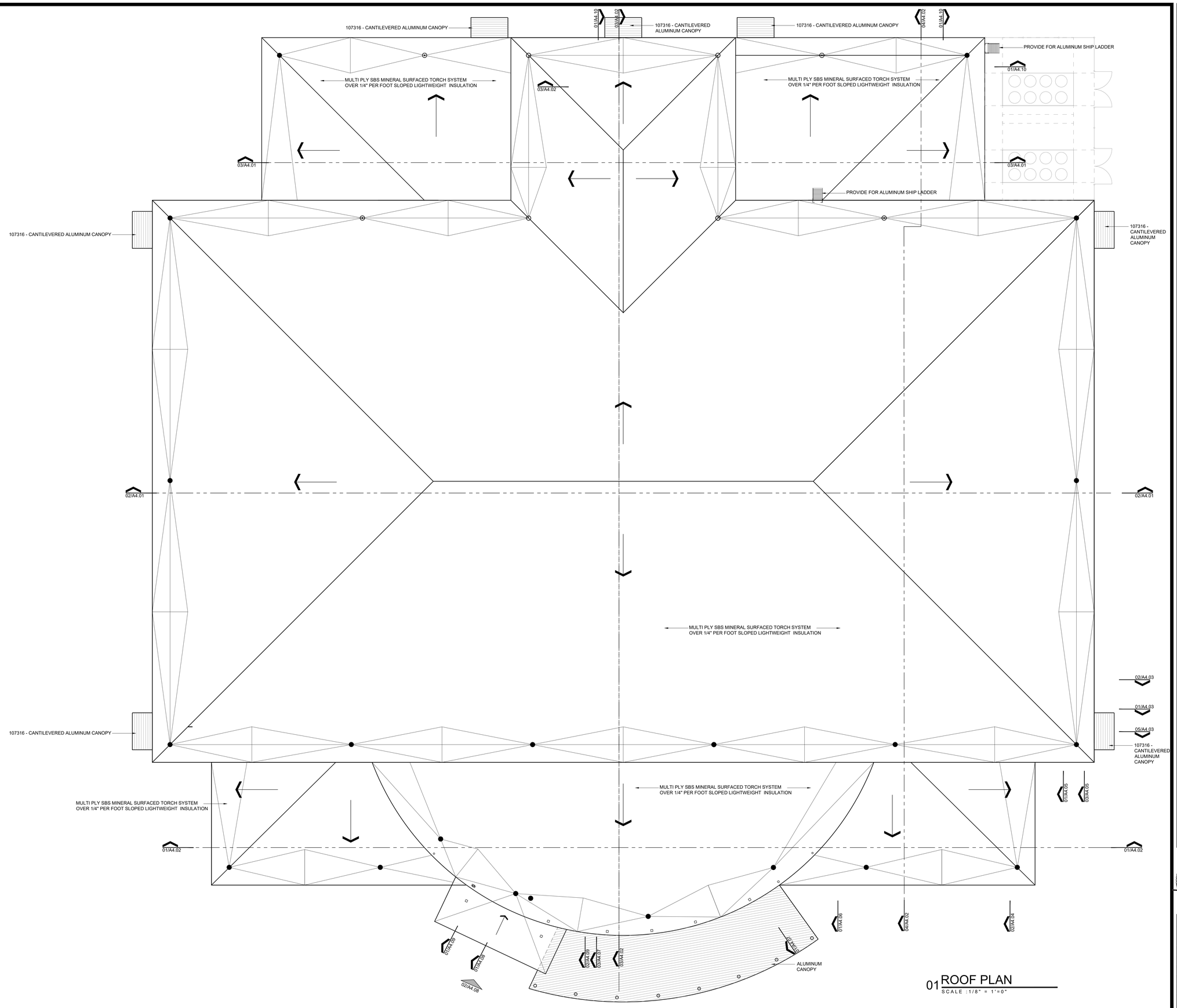

01 ROOF PLAN
SCALE : 1/8" = 1'=0"

No.	REVISIONS	BY

GMS ARCHITECTS
1150 Paredes Line Rd.
Brownsville TX 78526
(956) 546-0110
fax (956) 546-0196

BISD Hanna ECHS
Gymnasium Facility

REGISTERED ARCHITECT DAVID A. MONREAL 79556 STATE OF TEXAS
6-14-2019

© Copyright 2019
Gomez Mendez Saenz Inc.
Architects-Planners
Interior Designers

Date:	JUNE, 2019
Scale:	As Noted
Project Architect:	David Monreal, AIA
Drawn By:	RB
Job No.	BISD Hanna Gymnasium
Sheet:	A2.05

Jun 14, 2019 - 4:40pmC:\Users\Station-1\appdata\local\temp\AcPublish_3964\Hanna Gym_FP.dwg

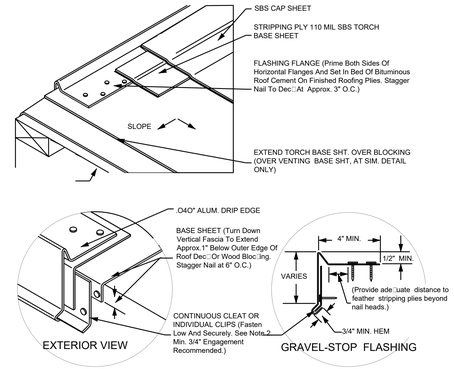

08 EDGE DETAIL

NOT TO SCALE

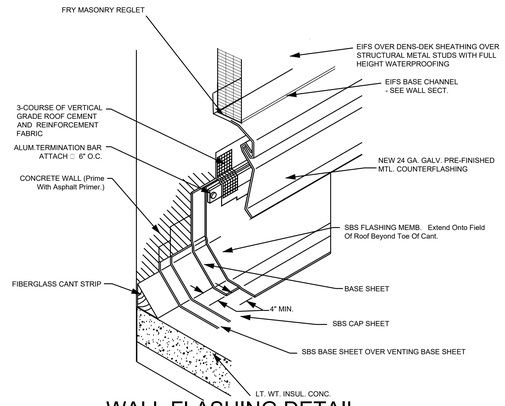

07 WALL FLASHING DETAIL

NOT TO SCALE

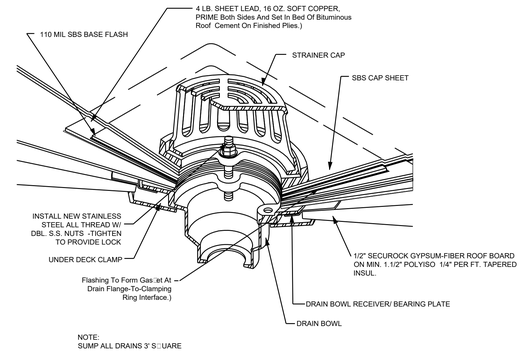

NOTE:
SUMP ALL DRAINS 3' S□UARE

04 TYP. ROOF DRAIN DETAIL

NOT TO SCALE

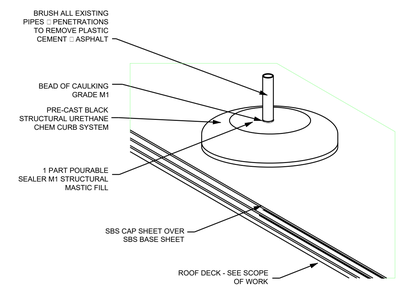

03 TYP. CHEM CURB DETAIL

NOT TO SCALE

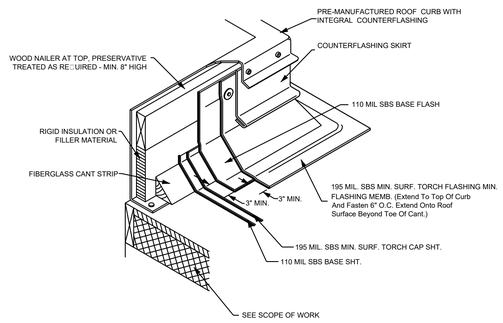

06 TYP. A/C CURB DETAIL

NOT TO SCALE

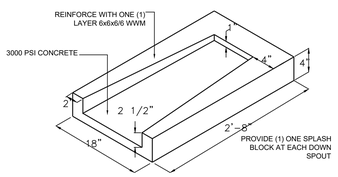

02 SPLASH BLOCK DTL

SCALE 1-1/2" = 1'-0"

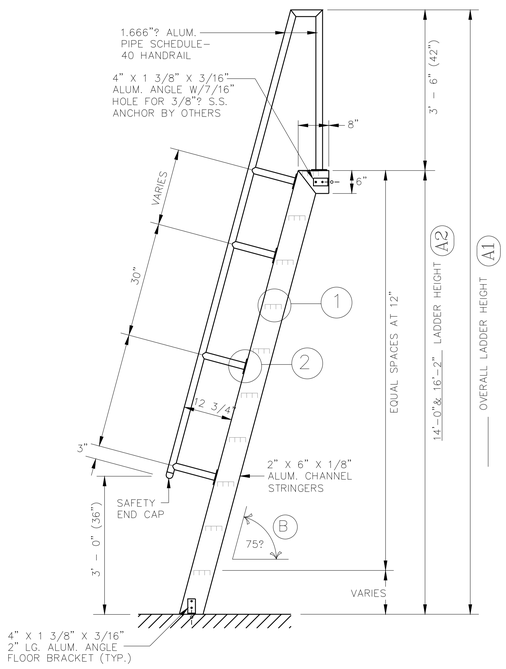

05 TYP. SHIP LADDER

NOT TO SCALE

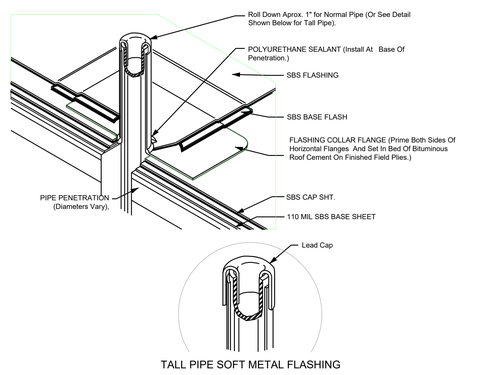

05 TYP. VENT PIPE DETAIL

NOT TO SCALE

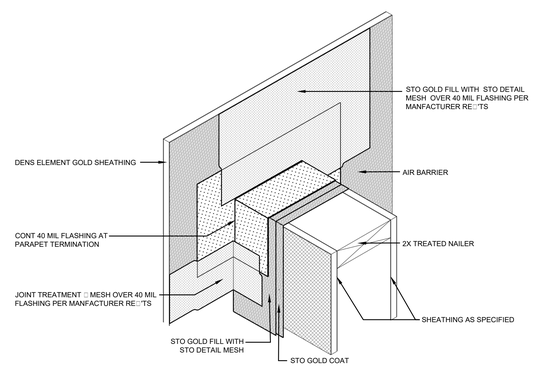

01 PARAPET TERMINATION ISO

SCALE □ NONE

No.	REVISIONS	BY

GMS ARCHITECTS
1150 Paredes Line Rd.
Brownsville TX 78526
(956) 546-0110
fax (956) 546-0196

BISD Hanna ECHS
Gymnasium Facility

REGISTERED ARCHITECT DAVID A. MONREAL 19556 STATE OF TEXAS
6-14-2019

© Copyright 2019
Gomez Mendez Saenz Inc.
Architects-Planners
Interior Designers

Date:	JUNE, 2019
Scale:	As Noted
Project Architect:	David Monreal, AIA
Drawn By:	RB
Job No.	BISD Hanna Gymnasium
Sheet:	A2.06

WINDOW SCHEDULE

WDW NO.	MATL	SIZE W	SIZE H	ELEVATION HEAD	ELEVATION SILL	GLASS	DETAIL JAMB	DETAIL HEAD	DETAIL SILL	REMARKS
A	BRNZ-ALUM	6'-4"	6'-0"	SEE SHEET SERIES 5.00 FOR WINDOW HEIGHTS		LOW- E INSUL OPAQUE	02/A3.02	03/A3.02	04/A3.02	
B	BRNZ-ALUM	6'-0"	1'-4"			LOW- E INSUL OPAQUE	10/A3.02	12/A3.02	11/A3.02	
C	BRNZ-ALUM	4'-0"	4'-0"			LOW- E INSUL OPAQUE	02/A3.02	03/A3.02	04/A3.02	
D	BRNZ-ALUM	5'-3"	7'-6"			LOW- E INSUL OPAQUE	10/A3.02	12/A3.02	11/A3.02	
E	BRNZ-ALUM	6'-0"	6'-0"			LOW- E INSUL OPAQUE	02/A3.02	03/A3.02	04/A3.02	
F	BRNZ-ALUM	6'-4"	8'-8"			LOW- E INSUL OPAQUE	02/A3.02	03/A3.02	04/A3.02	
G	BRNZ-ALUM	31'-4"	5'-4"			TEMPERED GLASS				SLIDING GLASS HARDWARE

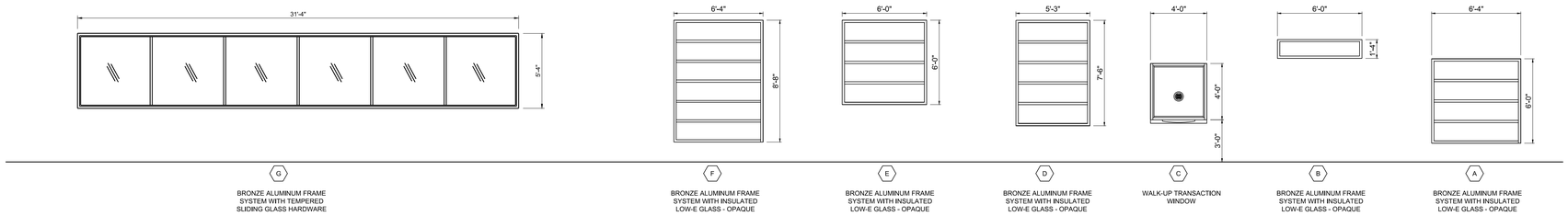

BRONZE ALUMINUM FRAME SYSTEM WITH TEMPERED SLIDING GLASS HARDWARE

BRONZE ALUMINUM FRAME SYSTEM WITH INSULATED LOW-E GLASS - OPAQUE

BRONZE ALUMINUM FRAME SYSTEM WITH INSULATED LOW-E GLASS - OPAQUE

BRONZE ALUMINUM FRAME SYSTEM WITH INSULATED LOW-E GLASS - OPAQUE

WALK-UP TRANSACTION WINDOW

BRONZE ALUMINUM FRAME SYSTEM WITH INSULATED LOW-E GLASS - OPAQUE

BRONZE ALUMINUM FRAME SYSTEM WITH INSULATED LOW-E GLASS - OPAQUE

WINDOW ELEVATIONS

SCALE 1/4" = 1'-0"

N O T E: 1.) ALL EXTERIOR WINDOW FRAMES AND GLAZING TO MEET STRUCTURAL WIND LOAD PRESSURES.

REFERENCE SHEET SERIES A5.00 FOR WINDOW ELEVATIONS AND HEIGHTS

D O O R S C H E D U L E

DOOR NO.	DOOR MATL.	DOOR W	DOOR H	DOOR T	FRAME MATL.	FRAME W	FRAME H	FRAME T	HDWR	DETAIL JAMB	DETAIL HEAD	DETAIL SILL	REMARKS
1	ALUM.	SEE REMARKS	7'-0"	1 3/4"	ALUM.	12'-8"	23'-10"	VERIFY		11/A3.02	12/A3.02	01/A3.02	1 PAIR 2 SINGLE
2	ALUM.	PR - 3'-0"	7'-0"	1 3/4"	ALUM.	6'-4"	7'-2"	VERIFY		11/A3.02	12/A3.02	01/A3.02	
3	H.M.	PR - 3'-0"	7'-0"	1 3/4"	H.M.	6'-4"	7'-4"	VERIFY		11/A3.02	12/A3.02	01/A3.02	
4	H.M.	3'-0"	7'-0"	1 3/4"	H.M.	3'-4"	7'-4"	VERIFY		11/A3.02	12/A3.02	01/A3.02	
5	H.M.	PR - 3'-0"	7'-0"	1 3/4"	H.M.	6'-4"	7'-4"	VERIFY		11/A3.02	12/A3.02	01/A3.02	
6	S.C.	SEE REMARKS	7'-0"	1 3/4"	H.M.	6'-4"	7'-4"	VERIFY		11/A3.02	12/A3.02		1 PAIR 1 SINGLE
7	S.C.	3'-0"	7'-0"	1 3/4"	H.M.	6'-4"	7'-4"	VERIFY		09/A3.02	08/A3.02		
8	S.C.	3'-0"	7'-0"	1 3/4"	H.M.	6'-4"	7'-4"	VERIFY		09/A3.02	08/A3.02		
9	S.C.	3'-0"	7'-0"	1 3/4"	H.M.	3'-4"	7'-4"	VERIFY		09/A3.02	08/A3.02		
10	S.C.	3'-0"	7'-0"	1 3/4"	H.M.	3'-4"	7'-4"	VERIFY		09/A3.02	08/A3.02		
11	S.C.	3'-0"	7'-0"	1 3/4"	H.M.	7'-8"	7'-4"	VERIFY		09/A3.02	08/A3.02		
12	S.C.	3'-0"	7'-0"	1 3/4"	H.M.	3'-4"	7'-4"	VERIFY		09/A3.02	08/A3.02		
13	S.C.	3'-0"	7'-0"	1 3/4"	H.M.	3'-4"	7'-4"	VERIFY		09/A3.02	08/A3.02		
14	H.M.	3'-0"	7'-0"	1 3/4"	H.M.	3'-4"	7'-4"	VERIFY		09/A3.02	08/A3.02		
15	S.C.	3'-0"	7'-0"	1 3/4"	H.M.	3'-4"	7'-4"	VERIFY		09/A3.02	08/A3.02		
16	ALUM.	12'-0"	6'-0"	VERIFY	VERIFY	VERIFY	VERIFY	VERIFY		09/A3.02	08/A3.02		VERIFY FRAME REQUIREMENTS WITH MFG.
17	H.M.	3'-0"	7'-0"	1 3/4"	H.M.	3'-4"	7'-4"	VERIFY		09/A3.02	08/A3.02		ON ROOF TOP MEZZANINE
18	H.M.	3'-0"	7'-0"	1 3/4"	H.M.	5'-4"	7'-4"	VERIFY		09/A3.02	08/A3.02		HI IMPACT GLAZING
19	H.M.	PR - 3'-0"	7'-0"	1 3/4"	H.M.	6'-4"	7'-4"	VERIFY		09/A3.02	08/A3.02		

NOTE : PROVIDE LABELED DOORS AND HARDWARE AT ALL FIRE RATED PARTITIONS
NOTE : ALL EXTERIOR HOLLOW METAL DOORS & FRAMES TO BE HOT DIPPED Galv. - TYP.
NOTE : ALL GIVEN DIMENSIONS OF DOOR LITES ARE VISIBLE GLASS AREA - ACTUAL LIGHT OPENING TO VARY BY MANUFACTURE'S REQUIREMENTS

NOTE : REFER TO FIXTURE PLANS FOR CORRESPONDING DOOR HARDWARE SETS
NOTE : PROVIDE CYLINDERS OF ALL LOCKSETS TO BE KEYED TO EXISTING GRANDMASTER SYSTEM.
NOTE : CONTRACTOR MUST PROVIDE TRANSITION STRIPS AT ALL DISSIMILAR FLOOR CONDITIONS BETWEEN ROOMS AT DOOR SILLS

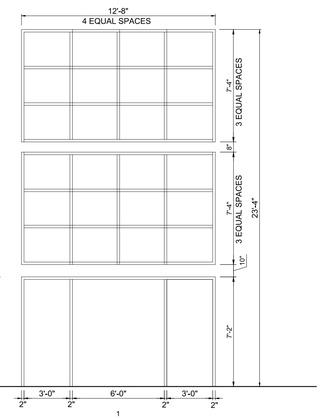

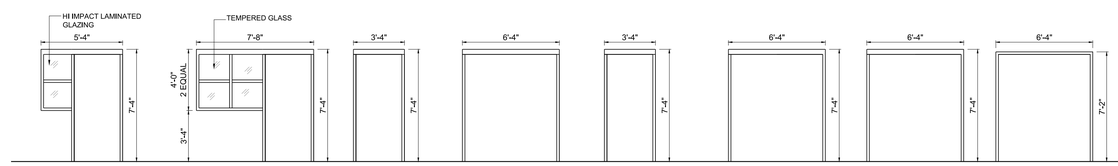

18 HOLLOW METAL

11 HOLLOW METAL

9,10,12,13,14,15,17 HOLLOW METAL FRAMES ON EXTERIOR WALL TO BE HOT DIPPED GALVANIZED

6 HOLLOW METAL

4 HOLLOW METAL

19 HOLLOW METAL FRAMES ON EXTERIOR WALL TO BE HOT DIPPED GALVANIZED

3,5,7,8 HOLLOW METAL

2 BRONZE ALUMINUM FRAME SYSTEM WITH INSULATED LOW-E GLASS TINTED AS SPECIFIED

1 BRONZE ALUMINUM FRAME SYSTEM WITH INSULATED LOW-E GLASS TINTED AS SPECIFIED

DOOR FRAME ELEVATIONS

SCALE 1/4" = 1'-0"

NOTE: ALL EXTERIOR HOLLOW METAL DOOR FRAMES TO BE HOT DIPPED GALVANIZED REGARDLESS WHETHER NOTED OR NOT.

ALL EXTERIOR GLAZING ASSEMBLIES FOR WINDOWS & STOREFRONTS NEED TO BE DESIGNED TO MEET ASCE 7-05 WIND PRESSURES & SHALL BE IMPACT RESISTANT MEETING ASTM E 1996 FOR LARGE MISSILES.

ALL EXTERIOR WINDOWS, DOORS, STOREFRONTS & O.H. DOOR ASSEMBLIES SHALL BE CERTIFIED TO MEET THE PROJECTS MINIMUM DESIGN WIND PRESSURES. REFERENCE STRUCTURAL DRAWINGS FOR DESIGN WIND PRESSURE REQUIREMENTS - TYPICAL THROUGHOUT PROJECT

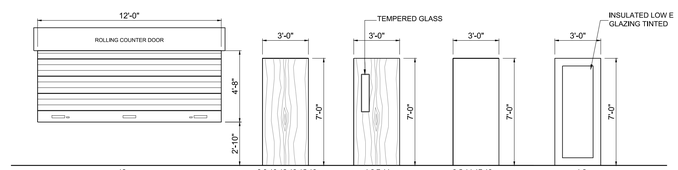

16 ROLLING ALUMINUM

8,9,10,12,13,15,18 SOLID CORE

4,6,7,11 SOLID CORE

3,5,14,17,19 HOLLOW METAL DOORS ON EXTERIOR WALL TO BE HOT DIPPED GALVANIZED

1,2 BRONZE ALUMINUM

DOOR ELEVATIONS

SCALE 1/4" = 1'-0"

NOTE: ALL EXTERIOR HOLLOW METAL DOORS TO BE HOT DIPPED GALVANIZED REGARDLESS WHETHER NOTED OR NOT.

No.	REVISIONS	BY

GMS ARCHITECTS
1150 Paredes Line Rd.
Brownsville TX 78526
(956) 546-0110
fax (956) 546-0196

BISD Hanna ECHS
Gymnasium Facility

REGISTERED ARCHITECT DAVID A. MONREAL 79556 STATE OF TEXAS
6-14-2019

© Copyright 2019
Gomez Mendez Saenz Inc.
Architects-Planners
Interior Designers

Date: JUNE, 2019
Scale: As Noted
Project Architect: David Monreal, AIA
Drawn By: RB
Job No. BISD Hanna Gymnasium
Sheet: A3.01

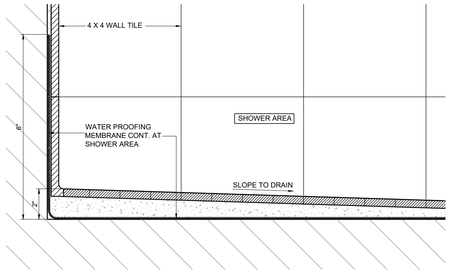

06 PLAN ENLARGEMENT
SCALE= 3" = 1'-0"

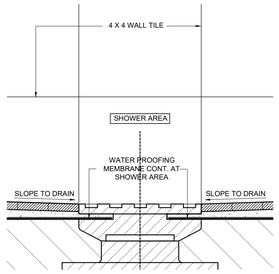

07 PLAN ENLARGEMENT
SCALE= 3" = 1'-0"

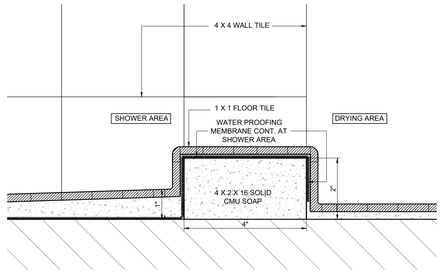

08 PLAN ENLARGEMENT
SCALE= 3" = 1'-0"

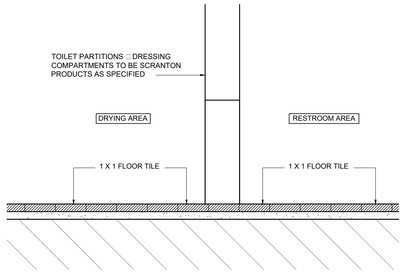

09 PLAN ENLARGEMENT
SCALE= 3" = 1'-0"

ACCESSORY LEGEND

No.	NAME	No.	NAME
A	SS CHANNEL FRAME MIRROR MOD □B-165-1836	Q	SOAP DISH MOD □B-438
B	HOT AIR DRYER (REFER TO M.E.P.)	R	CONTINUOS GRAB BAR MOD □B-6806 SERIES
C	42" LONG GRAB BAR MOD □B-6806 SERIES	S	METAL "J" HOOK BY TOILET PARTITION MFG
D	36" LONG GRAB BAR MOD □B-6806 SERIES	T	REVERSIBLE FOLDING SHOWER SEAT B-5181
E	MOP AND BROOM HOLDER MOD □B-223X36	U	COAT HOOK WITH BUMPER ONE AT EACH STALL DOOR BY TOILET PARTITION MFG.
F	DOUBLE TOILET TISSUE DISPENSER MOD □B-274	V	BABY CHANGING STATION MOD □E□UAL TO KB200-01 KOALA HORIZONTAL
G	DOUBLE TOILET TISSUE DISPENSER MOD □B-2740 (ADA)	W	PROVIDE DOOR PULL ON BOTH SIDES OF ACCESSIBLE AND AMBULATORY STALL DOOR
H	PARTITION MOUNTED SANITARY NAPKIN DISPOSAL MOD □B-354 SERVES TWO STALLS	X	SHOWER CURTAIN BY TOILET PARTITION MFG. PROVIDE 2 AT EACH SHOWER STALL WITH RE□UIRED HOOKS
I	LI□UID SOAP DISPENSER WALL MOUNT MOD □B-2111		TOILET PARTITIONS □ DRESSING COMPARTMENTS ALONG WITH ITEMS: PSWX TO BE SCRANTON PRODUCTS AS SPECIFIED
J	RECESSED SANITARY NAPKIN DISPOSAL MOD □B-35303		GENERAL NOTE FOR ALL TOILET ROOMS: PROVIDE CERAMIC TILE WAINSCOT BEHIND ALL MIRRORS.
K	RECESSED PAPER TOWEL DISPENSER □WASTE RECEPTACLE MOD □B-3904		PROVIDE 4"X4" CONT. TILE BORDER AROUND ALL MIRRORS
L	SHOWER ROD MOD □B-6047- 36"		ALL ACCESSORIES □ FIXTURES SHALL BE MOUNTED FOR ADULT HEIGHT
M	SHOWER ROD MOD □B-6047- 60" NOT USED		
N	SHOWER CURTAIN WITH HOOKS MOD □204-2 42"		
O	SHOWER CURTAIN W/ HOOKS MOD □204-3 -70" NOT USED		
P	GARMENT BAR BY TOILET PARTITION MFG 18"		

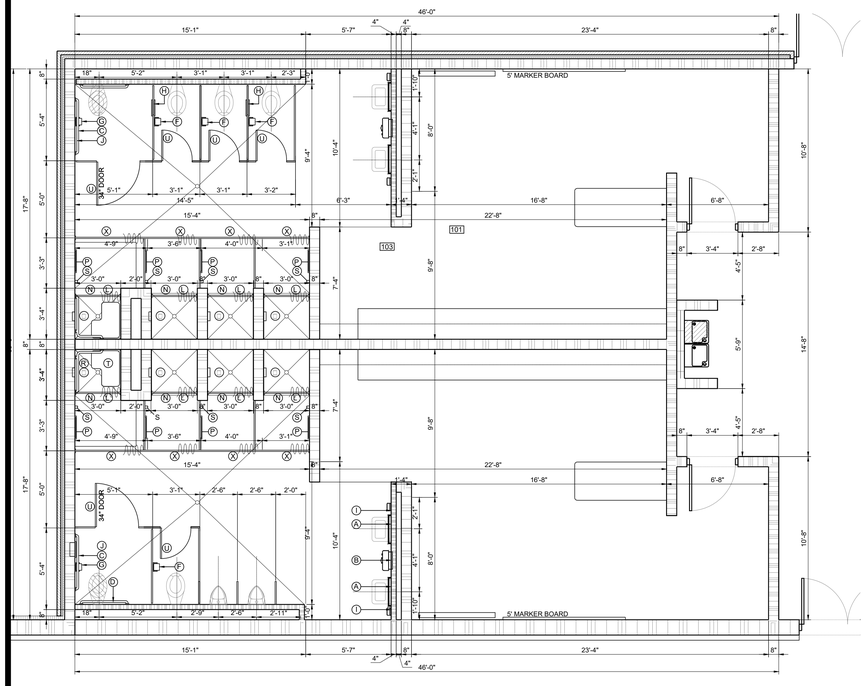

05 PLAN ENLARGEMENT
SCALE= 1/4" = 1'-0"

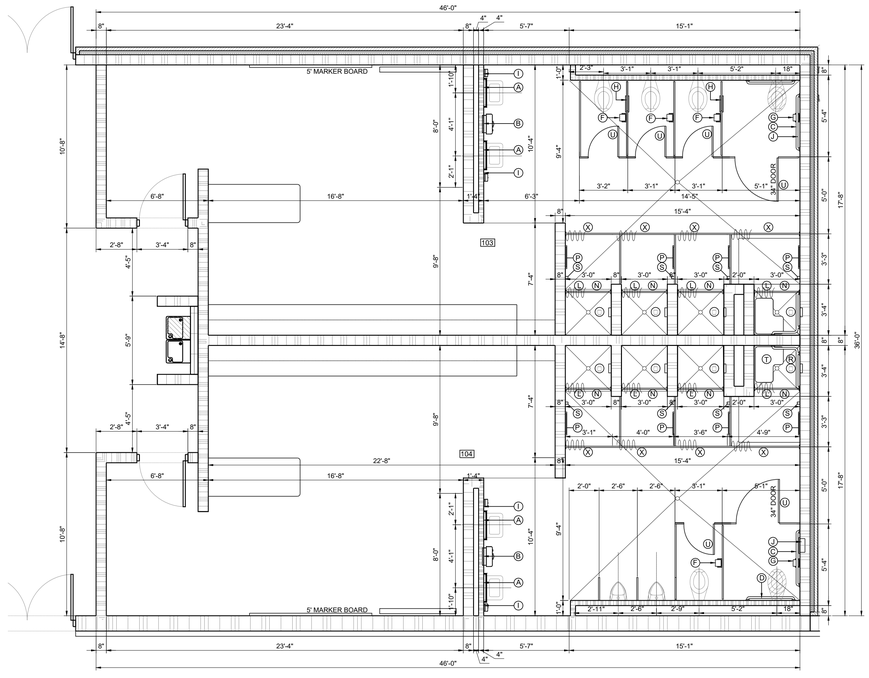

04 PLAN ENLARGEMENT
SCALE= 1/4" = 1'-0"

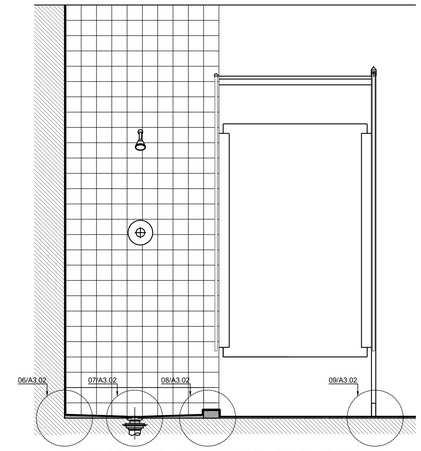

10 TYPICAL SHOWER ELEVATION
SCALE= 3/4" = 1'-0"

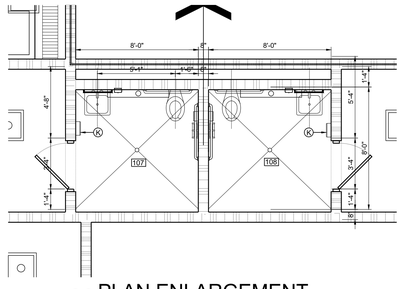

03 PLAN ENLARGEMENT
SCALE= 1/4" = 1'-0"

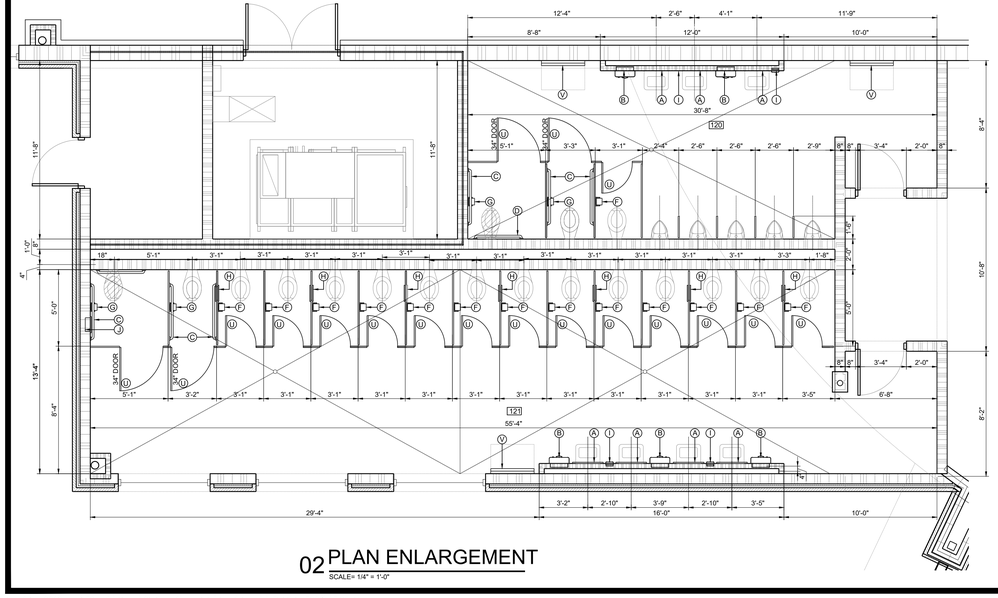

02 PLAN ENLARGEMENT
SCALE= 1/4" = 1'-0"

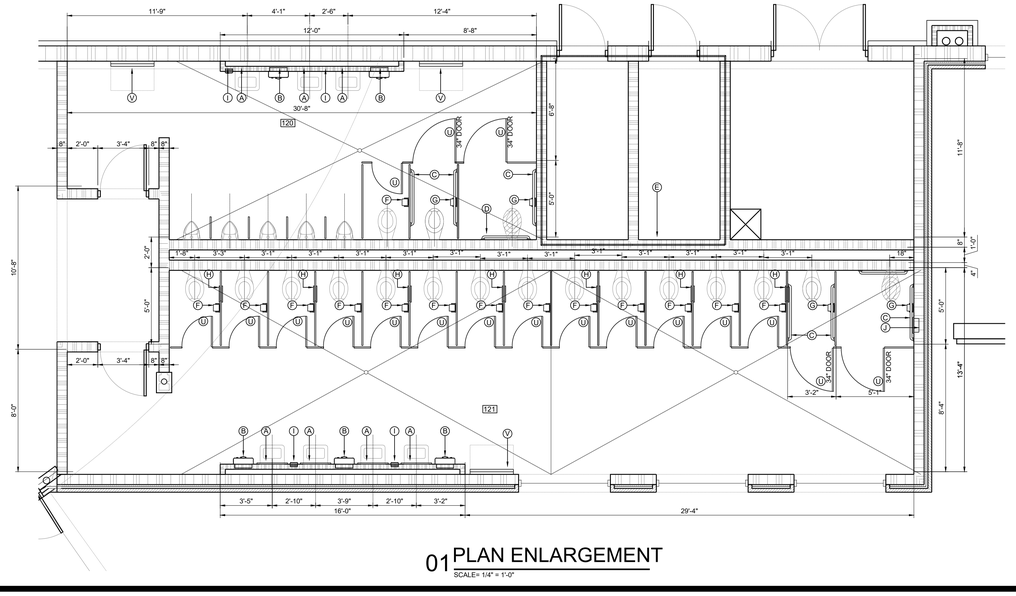

01 PLAN ENLARGEMENT
SCALE= 1/4" = 1'-0"

No.	REVISIONS	BY

GMS ARCHITECTS
1150 Paredes Line Rd.
Brownsville TX 78526
(956) 546-0110
fax (956) 546-0196

BISD Hanna ECHS
Gymnasium Facility

REGISTERED ARCHITECT DAVID A. MONREAL 19556 STATE OF TEXAS
6-14-2019

© Copyright 2019
Gomez Mendez Saenz Inc.
Architects-Planners
Interior Designers

Date: JUNE, 2019
Scale: As Noted
Project Architect: David Monreal, AIA
Drawn By: RB
Job No: BISD Hanna Gymnasium
Sheet: A3.02

CONCESSION LEGEND	
No.	NAME
1	COLD DISPLAY
2	DOUBLE DOOR CABINET RUBBERMAID 7083 72" FOUR SHELF DOUBLE-DOOR RESIN STORAGE CABINETS
3	DUAL TEMP REFIGERATOR/ FREEZER□
4	ICE MACHINE SCOTSMAN C0530SR-1D PLUIS SERIES 30" PROVIDE ALL NECESSARY ACCESSORIES AND PIPING RE□UIRED FOR PROPER INSTALLATION.
5	3 COMPARTMENT SINK (ADVANCE TABCO 18X24 BOWL SIZE□93-63-54-18L)
6	HANDSINK□ADVANCE TABCO□7-PS-50)
7	DRYER CONTINENTAL KDE/KDG 208/60/1□4 PRONG CORD,30 W/ HEATING ELEMENT FROM FACTORY
8	WASHER CONTINENTAL EH040□ELEC AUX HEAT□208/603,2W□G,40AMP

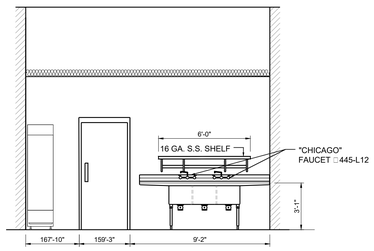

03 ELEVATION DETAIL
SCALE □1/4" = 1'=0"

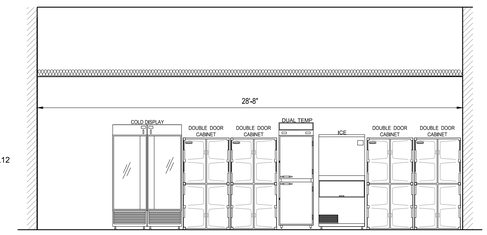

02 ELEVATION DETAIL
SCALE □1/4" = 1'=0"

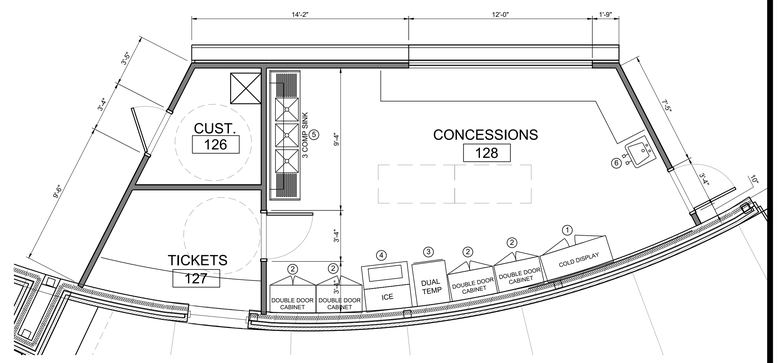

01 CONCESSIONS
SCALE □1/4" = 1'=0"

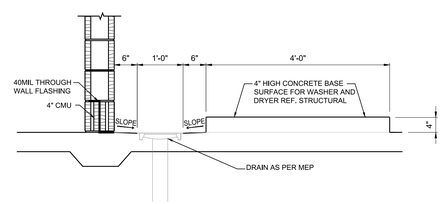

05 LAUNDRY ROOM
SCALE □1/4" = 1'=0"

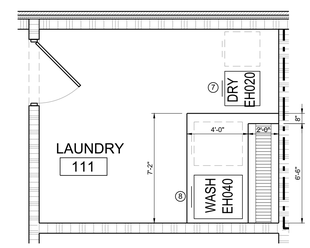

04 LAUNDRY ROOM
SCALE □1/4" = 1'=0"

07 TAPING TABLE IMAGE
SCALE □NTS

PROVIDE FOR PROTEAM BY HAUSMANN A9078 CABINET TREATMENT TABLE □ ACCESORIES
- GAS SPRING BACKREST (69-)
- ELEVATING SPLIT LEGS (A961)
- DOUBLE DOORS (A962)
- MODALITY DRAWER (A964)
- 3 DRAWERS (A966)

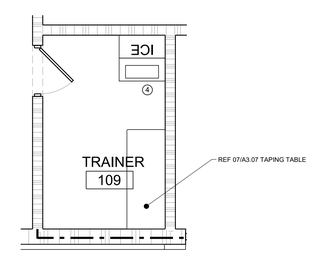

06 TRAINER ROOM ENLARGEMENT
SCALE □1/4" = 1'=0"

No.	REVISIONS	BY

GMS ARCHITECTS

1150 Paredes Line Rd.
Brownsville TX 78526
(956) 546-0110
fax (956) 546-0196

BISD Hanna ECHS
Gymnasium Facility

REGISTERED ARCHITECT DAVID A. MONREAL 78556 STATE OF TEXAS
6-14-2019

© Copyright 2019
Gomez Mendez Saenz Inc.
Architects-Planners
Interior Designers

Date:	JUNE, 2019
Scale:	As Noted
Project Architect:	David Monreal, AIA
Drawn By:	RB
Job No.	BISD Hanna Gymnasium
Sheet:	A3.05

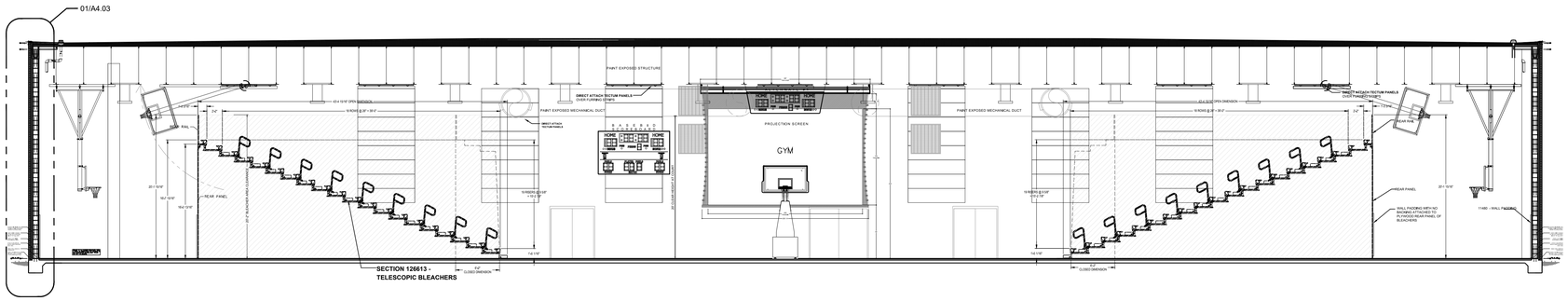

01 BUILDING SECTION
SCALE : 1/4" = 1'=0"

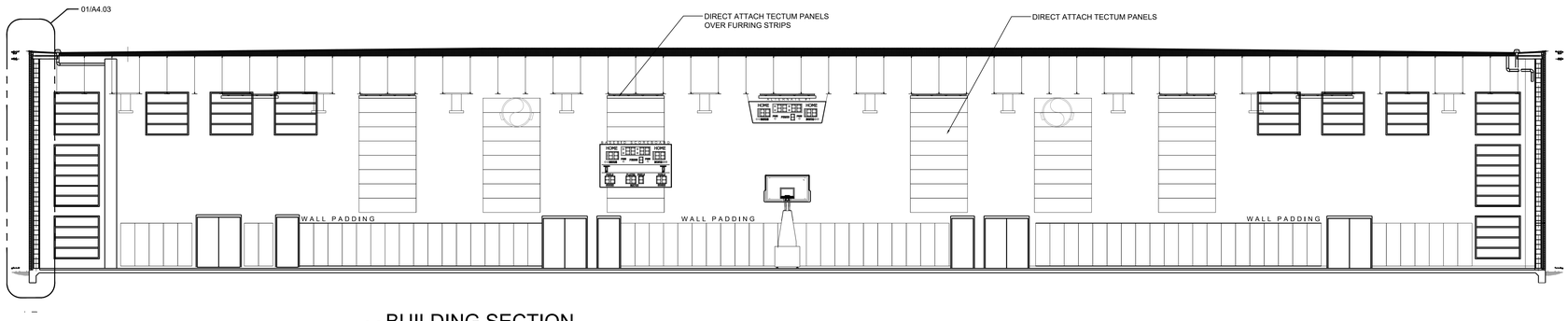

02 BUILDING SECTION
SCALE : 1/4" = 1'=0"

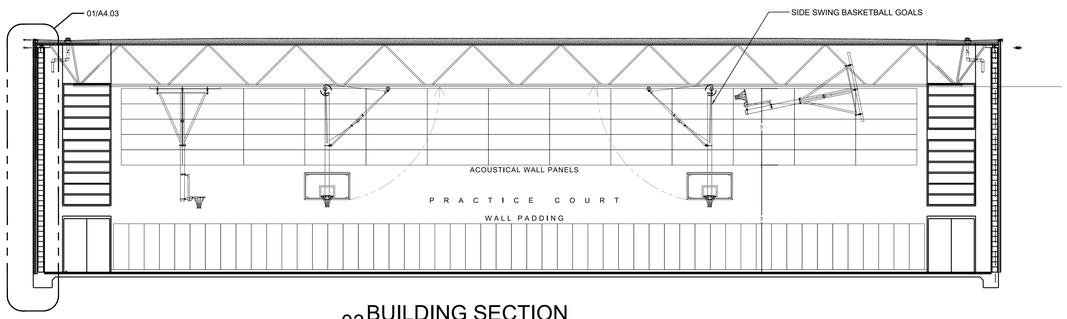

03 BUILDING SECTION
SCALE : 1/4" = 1'=0"

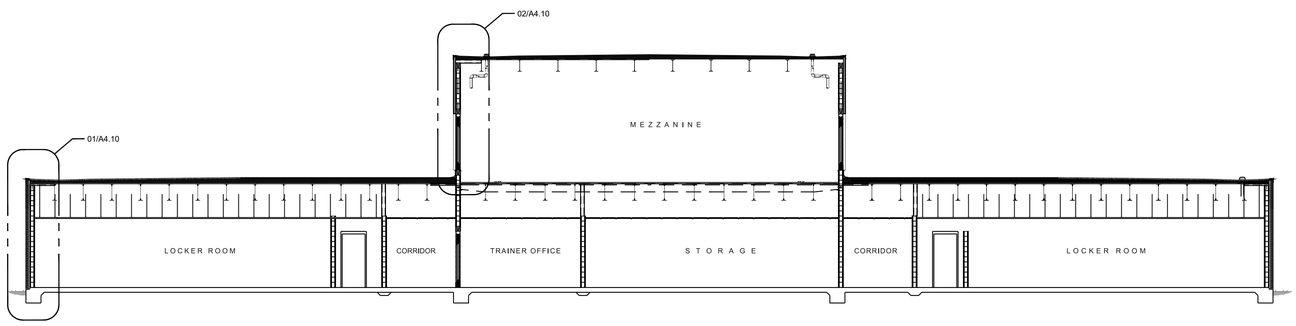

04 BUILDING SECTION
SCALE : 1/4" = 1'=0"

No.	REVISIONS	BY

GMS ARCHITECTS
1150 Paredes Line Rd.
Brownsville TX 78526
(956) 546-0110
fax (956) 546-0196

BISD Hanna ECHS
Gymnasium Facility

REGISTERED ARCHITECT
DAVID A. MONREAL
19556
STATE OF TEXAS
6-14-2019

© Copyright 2019
Gomez Mendez Saenz Inc.
Architects-Planners
Interior Designers

Date: JUNE, 2019
Scale: As Noted
Project Architect: David Monreal, AIA
Drawn By: RB
Job No. BISD Hanna Gymnasium
Sheet: A4.01

Jun 14, 2019 - 4:32pmC:\Users\Station-1\appdata\local\temp\AcPublish_3964\Hanna Gym_WS.dwg

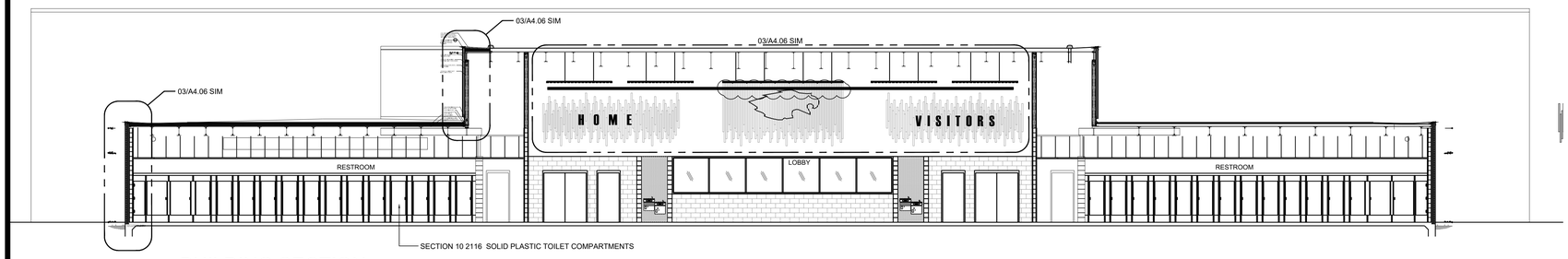

01 BUILDING SECTION
SCALE : 1/4" = 1"=0"

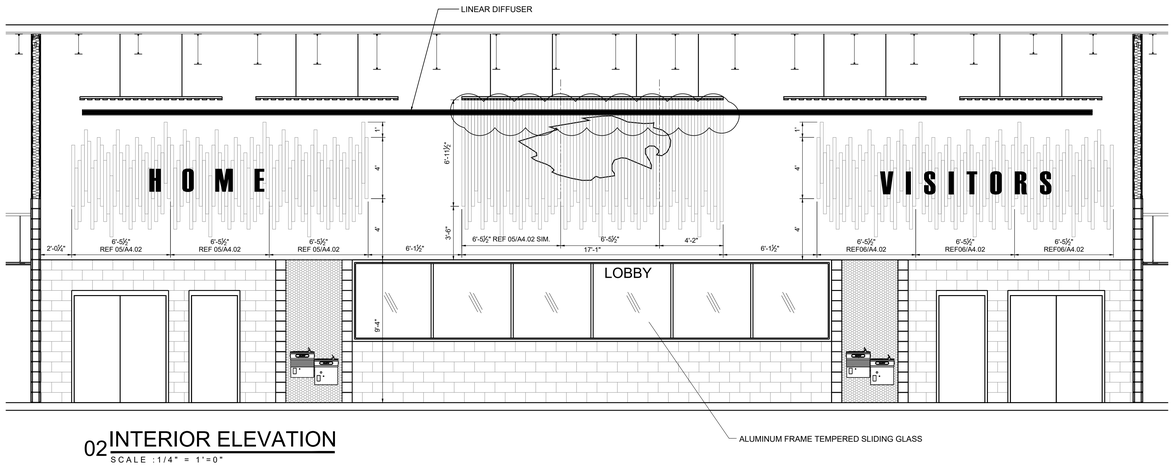

02 INTERIOR ELEVATION
SCALE : 1/4" = 1"=0"

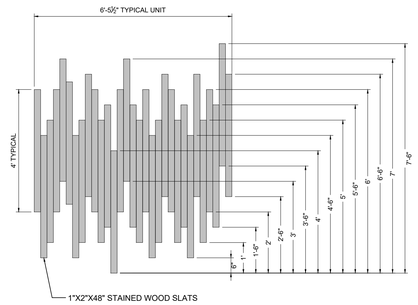

05 ELEVATION DETAIL
SCALE : 1/2" = 1"=0"

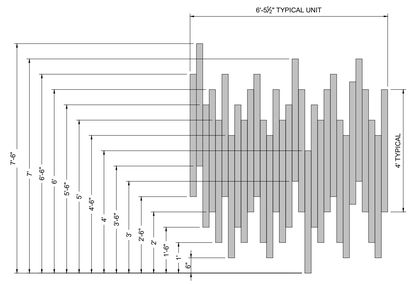

06 ELEVATION DETAIL
SCALE : 1/2" = 1"=0"

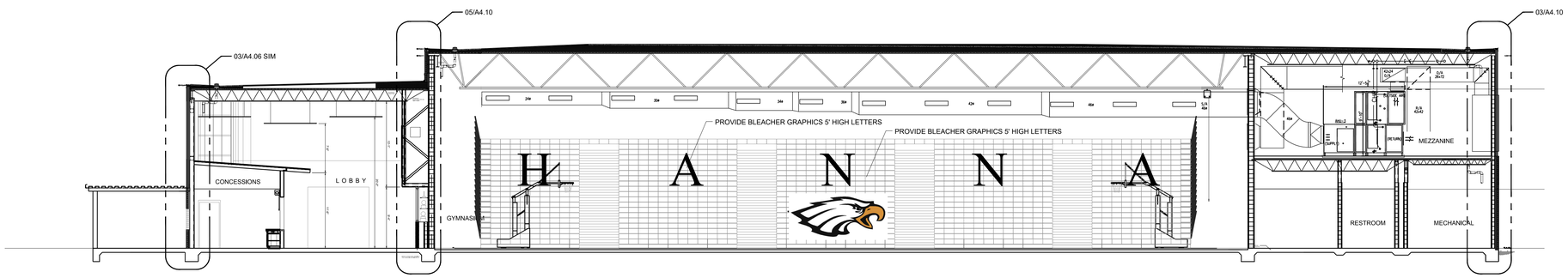

03 BUILDING SECTION
SCALE : 1/4" = 1"=0"

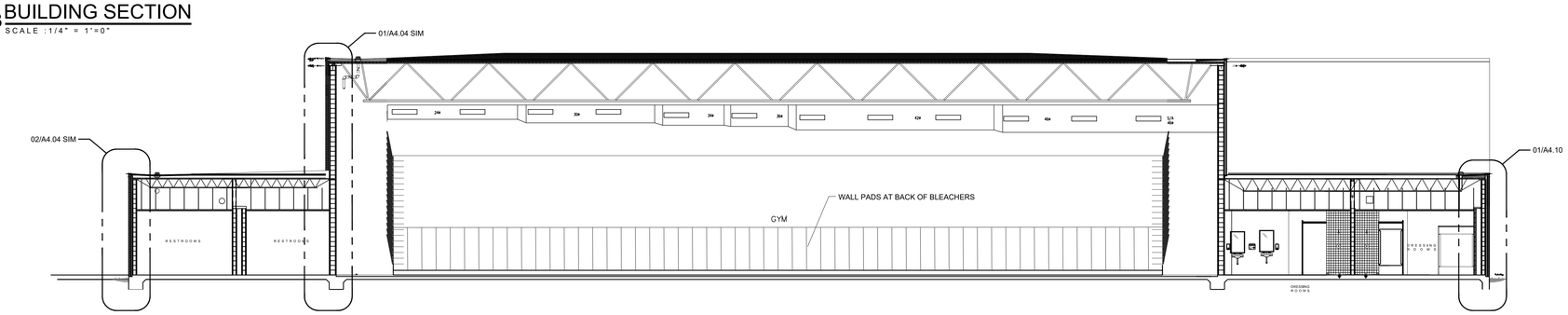

04 BUILDING SECTION
SCALE : 1/4" = 1"=0"

No.	REVISIONS	BY

GMS ARCHITECTS
1150 Paredes Line Rd.
Brownsville TX 78526
(956) 546-0110
fax (956) 546-0196

BISD Hanna ECHS
Gymnasium Facility

REGISTERED ARCHITECT
DAVID A. MONREAL
19556
STATE OF TEXAS
6-14-2019

© Copyright 2019
Gomez Mendez Saenz Inc.
Architects-Planners
Interior Designers

Date: JUNE, 2019
Scale: As Noted
Project Architect: David Monreal, AIA
Drawn By: RB
Job No. BISD Hanna Gymnasium
Sheet: A4.02

Jun 14, 2019 - 4:32pmC:\Users\Station-1\appdata\local\temp\AcPublish_3964\Hanna Gym_WS.dwg

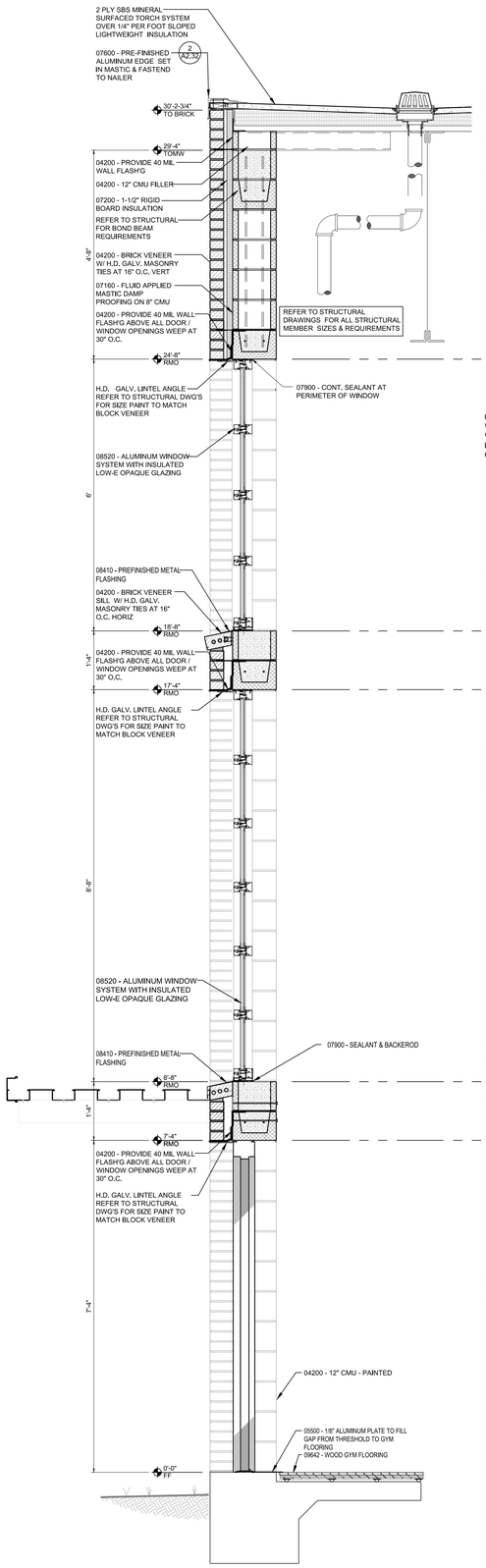

05 WALL SECTION
SCALE : 3/4" = 1'=0"

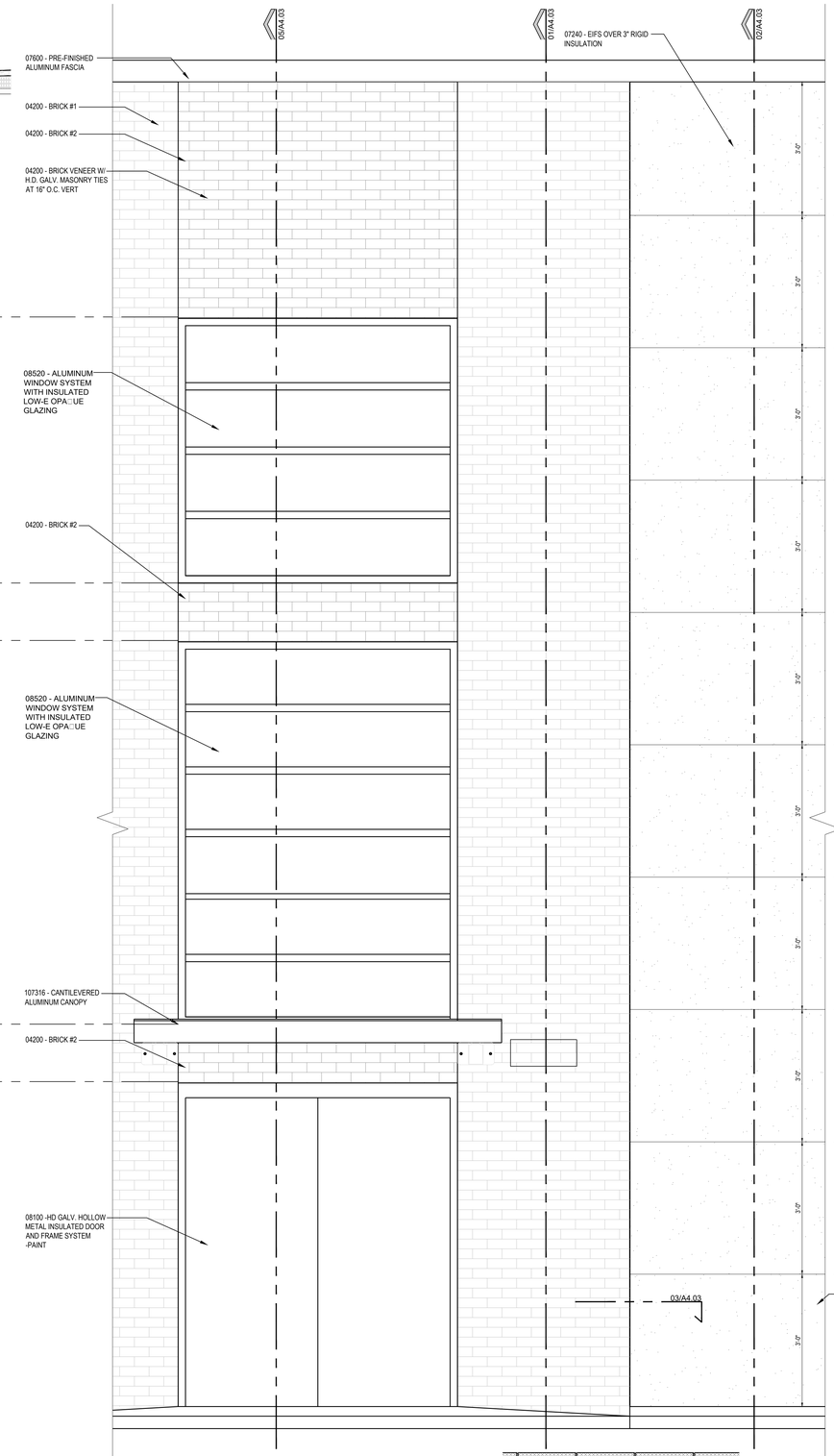

04 PARTIAL ELEVATION
SCALE : 3/4" = 1'=0"

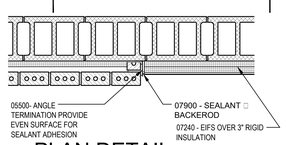

03 PLAN DETAIL
SCALE : 3/4" = 1'=0"

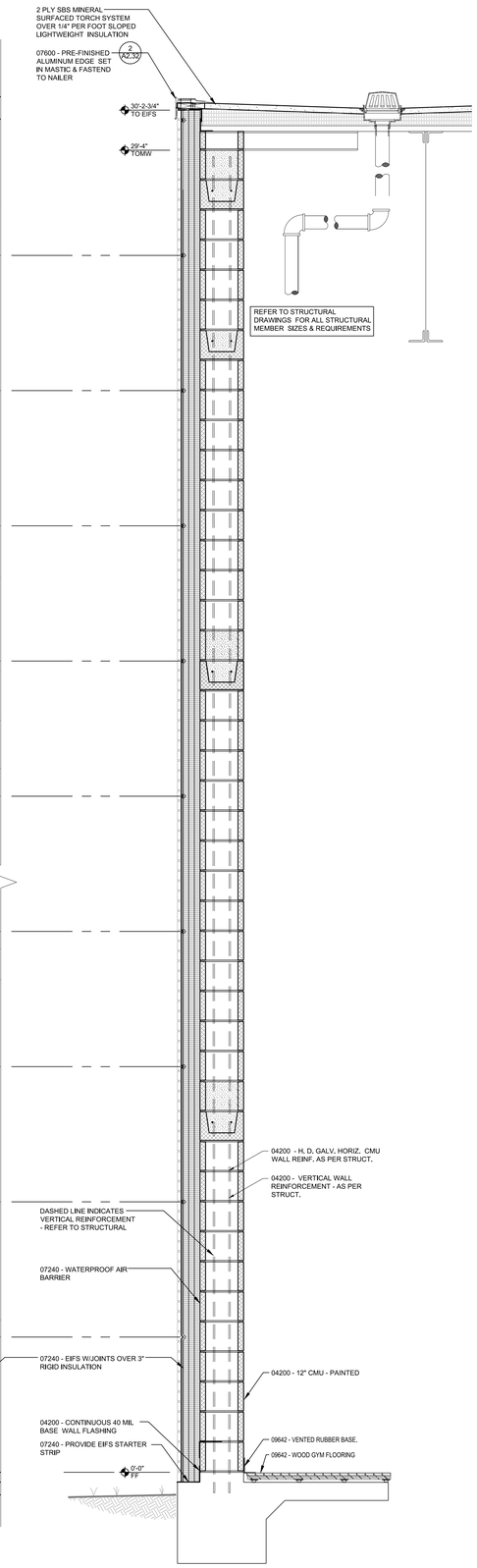

02 WALL SECTION EIFS
SCALE : 3/4" = 1'=0"

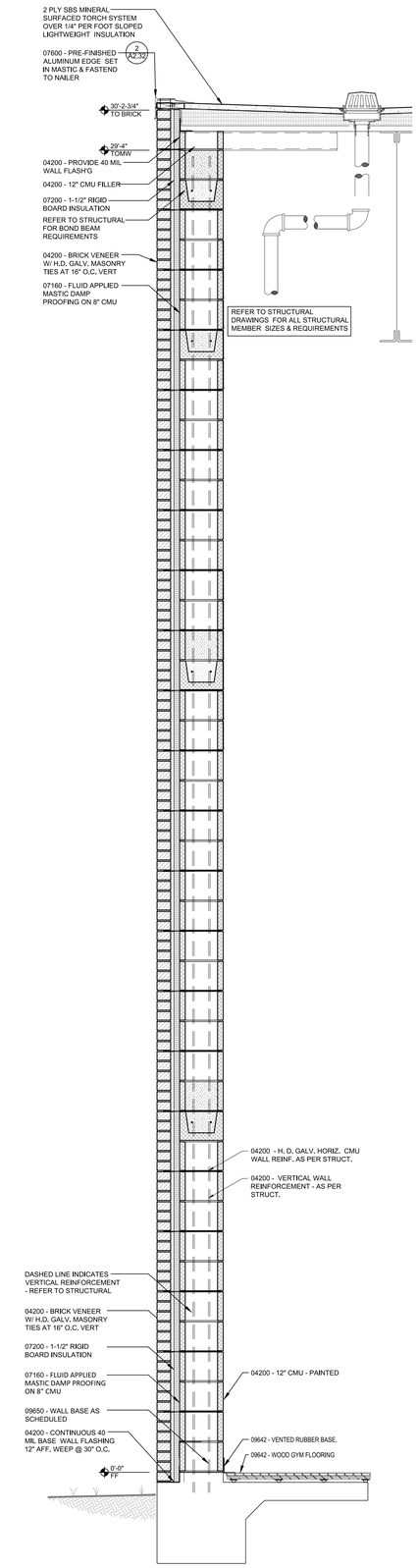

01 WALL SECTION BRICK
SCALE : 3/4" = 1'=0"

No.	REVISIONS	BY

GMS ARCHITECTS
1150 Paredes Line Rd.
Brownsville TX 78526
(956) 546-0110
fax (956) 546-0196

BISD Hanna ECHS
Gymnasium Facility

REGISTERED ARCHITECT DAVID A. MONREAL 78556 STATE OF TEXAS
6-14-2019

© Copyright 2019
Gomez Meindez Saenz Inc.
Architects-Planners
Interior Designers

Date: JUNE, 2019
Scale: As Noted
Project Architect: David Monreal, AIA
Drawn By: RB
Job No. BISD Hanna Gymnasium
Sheet: A4.03

Jun 14, 2019 - 4:32pm C:\Users\Station-1\appdata\local\temp\AcPublish_3964\Hanna Gym_WS.dwg

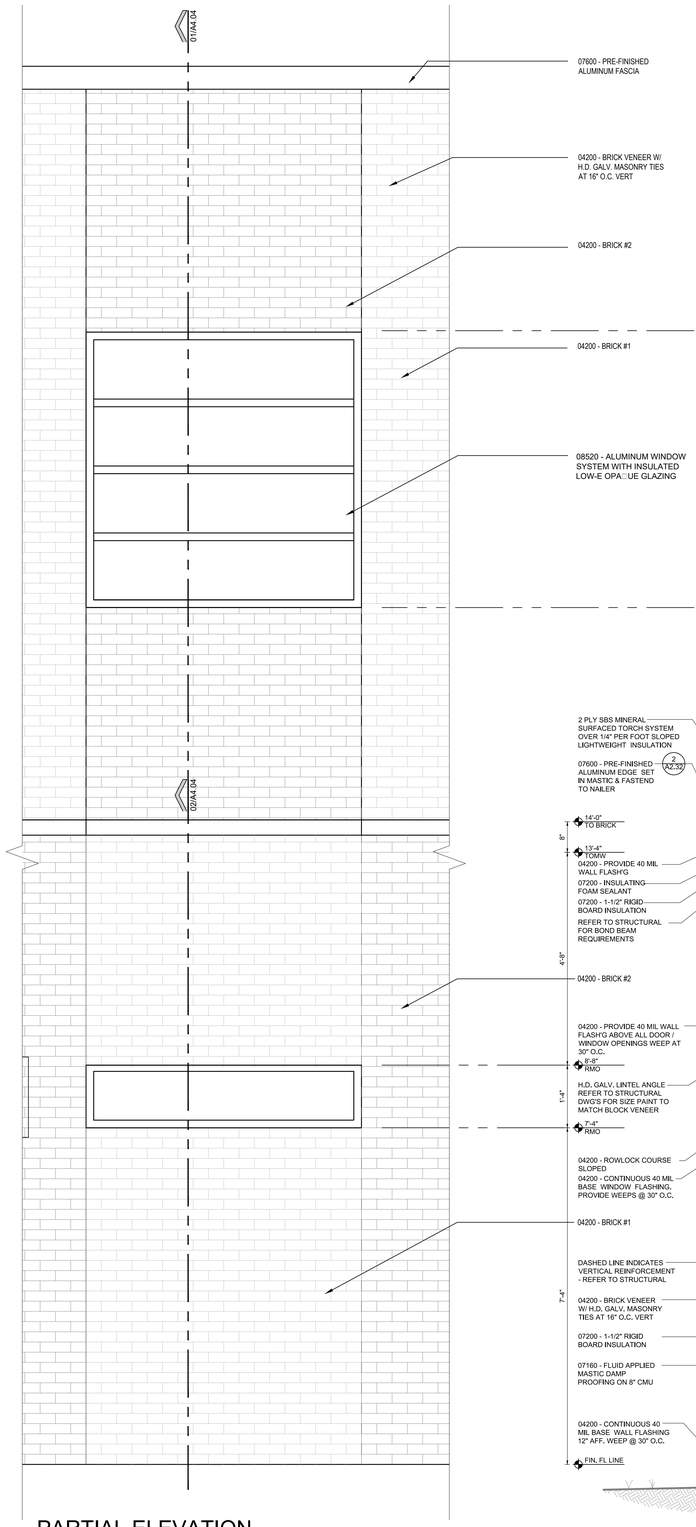

04 PARTIAL ELEVATION
SCALE : 3/4" = 1'=0"

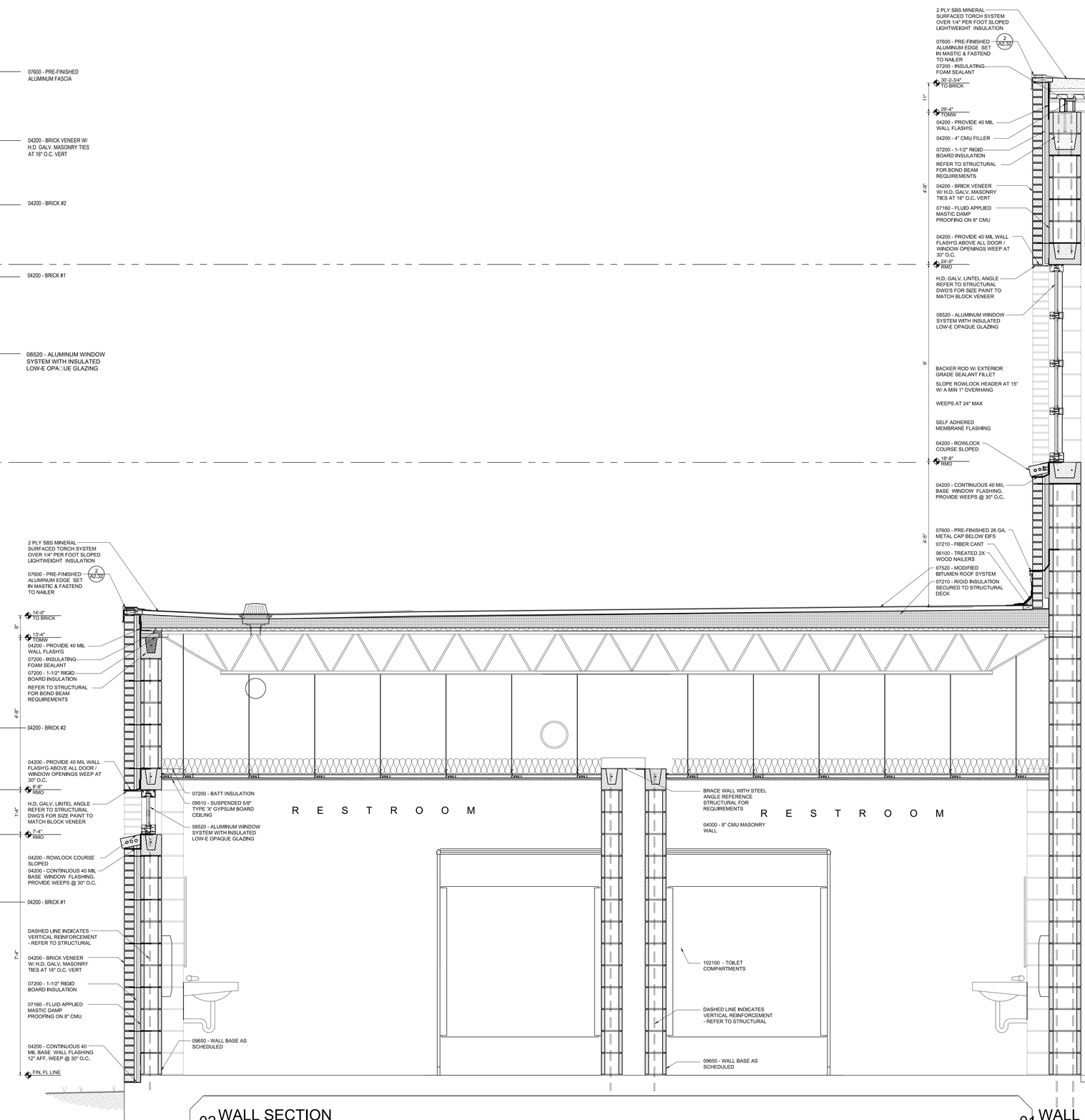

02 WALL SECTION
SCALE : 3/4" = 1'=0"

01 WALL SECTION
SCALE : 3/4" = 1'=0"

No.	REVISIONS	BY

GMS ARCHITECTS
1150 Paredes Line Rd.
Brownsville TX 78526
(956) 546-0110
fax (956) 546-0196

BISD Hanna ECHS
Gymnasium Facility

REGISTERED ARCHITECT DAVID A. MONNEAL 19556 STATE OF TEXAS
6-14-2019

© Copyright 2019
Gomez Mendez Saenz Inc.
Architects-Planners
Interior Designers

Date:	JUNE, 2019
Scale:	As Noted
Project Architect:	David Monneal, AIA
Drawn By:	RB
Job No.	BISD Hanna Gymnasium
Sheet:	A4.04

Jun 14, 2019 - 4:32pm C:\Users\Station-1\appdata\local\temp\AcPublish_3964\Hanna Gym_WS.dwg

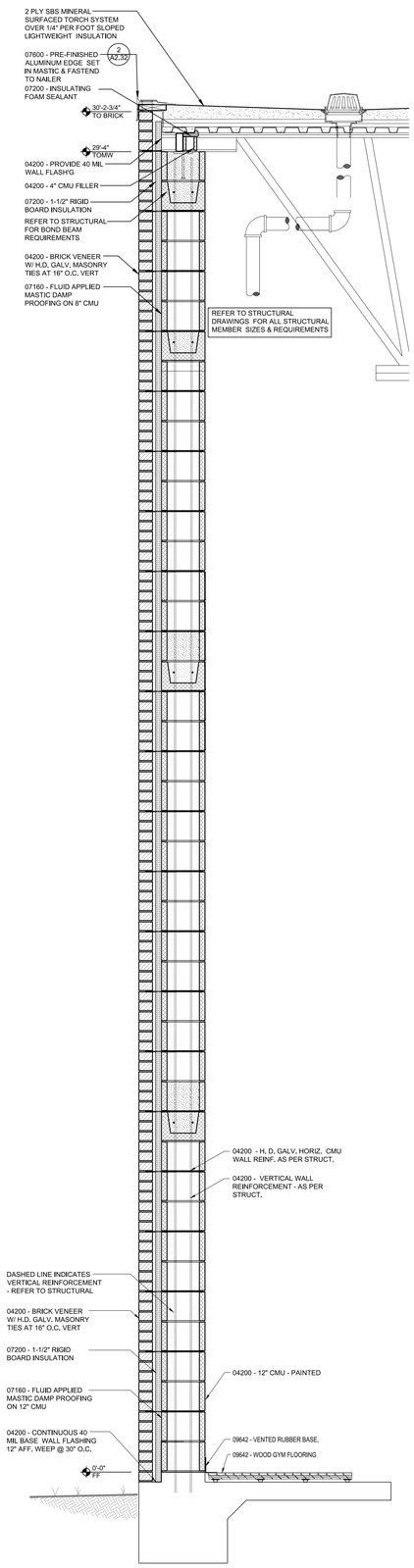

03 WALL SECTION
SCALE : 3/4" = 1'=0"

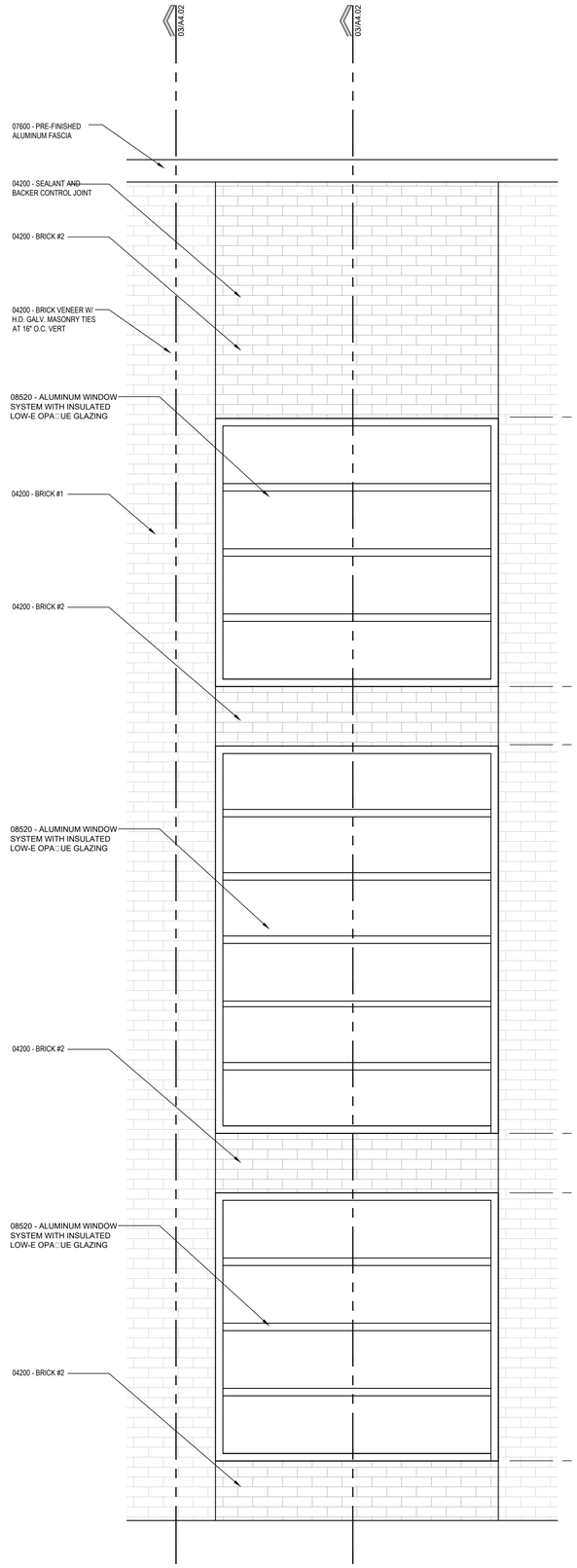

02 PARTIAL ELEVATION
SCALE : 3/4" = 1'=0"

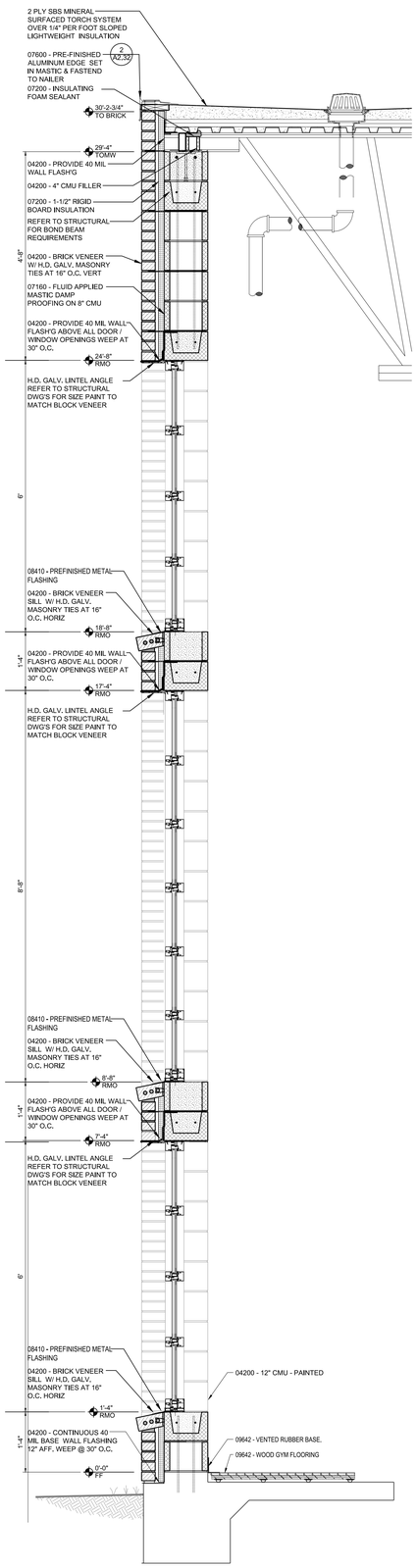

01 WALL SECTION
SCALE : 3/4" = 1'=0"

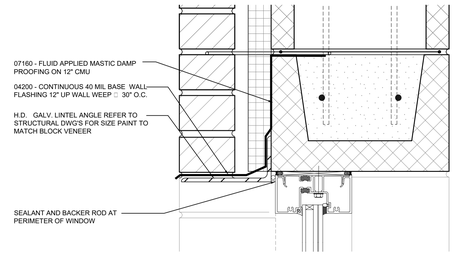

04 WALL SECTION
SCALE : 3/4" = 1'=0"

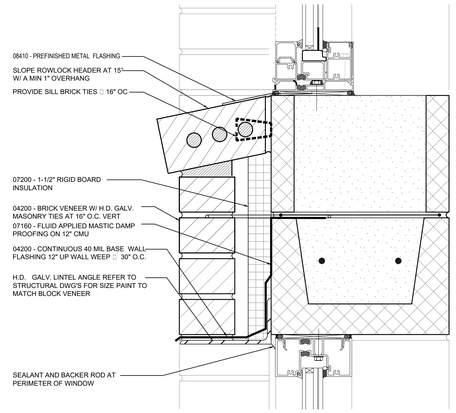

05 WALL SECTION
SCALE : 3/4" = 1'=0"

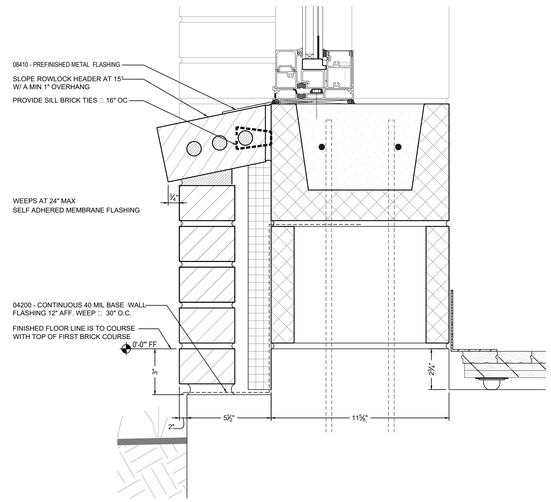

06 WALL SECTION
SCALE : 3/4" = 1'=0"

No.	REVISIONS	BY

GMS ARCHITECTS
1150 Paredes Line Rd.
Brownsville TX 78526
(956) 546-0110
fax (956) 546-0196

BISD Hanna ECHS
Gymnasium Facility

REGISTERED ARCHITECT DAVID A. MONREAL 79556 STATE OF TEXAS
6-14-2019

© Copyright 2019
Gomez Mendez Saenz Inc.
Architects-Planners
Interior Designers

Date: JUNE, 2019
Scale: As Noted
Project Architect: David Monreal, AIA
Drawn By: RB
Job No: BISD Hanna Gymnasium
Sheet: A4.05

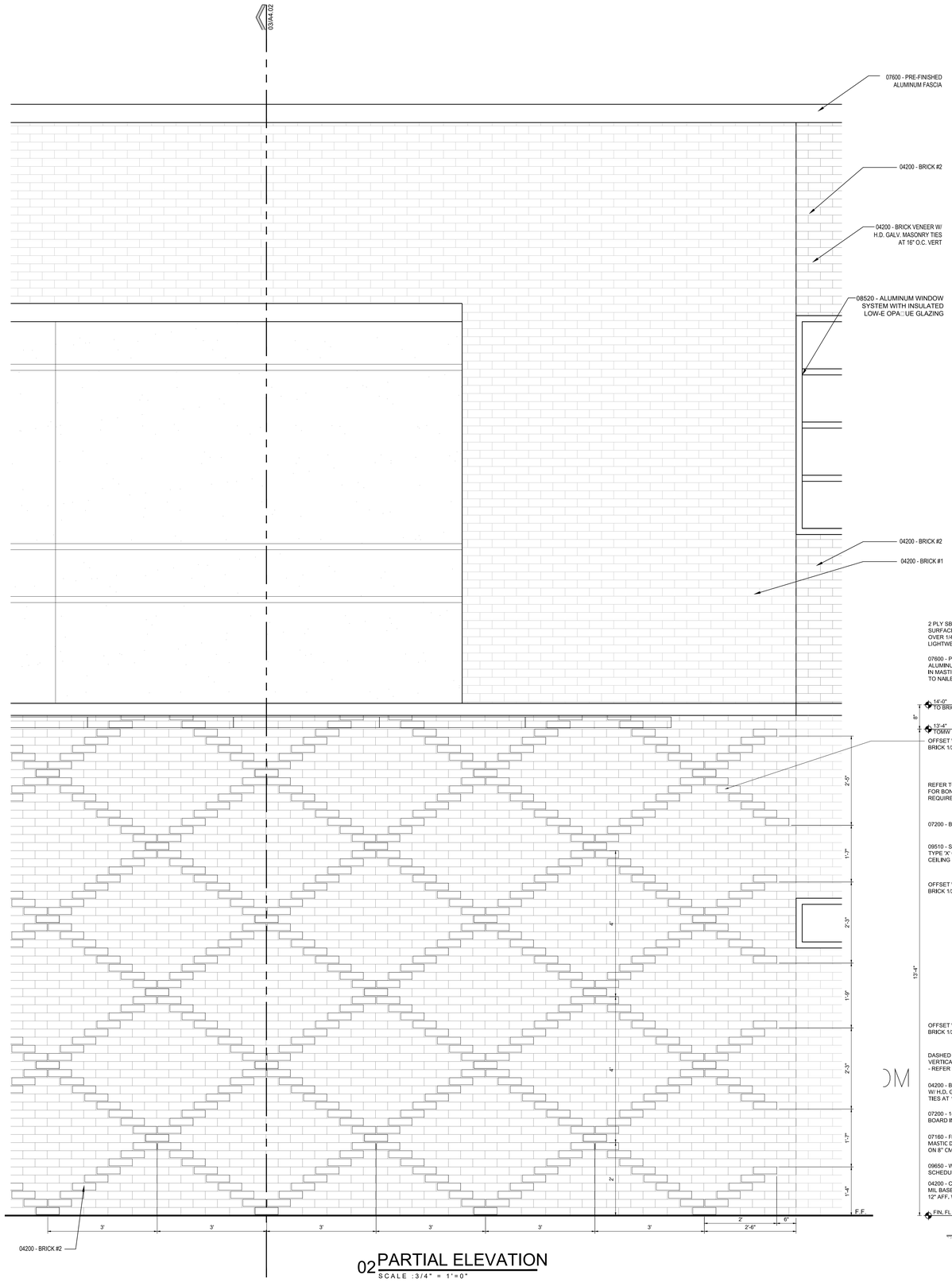

02 PARTIAL ELEVATION
SCALE : 3/4" = 1'=0"

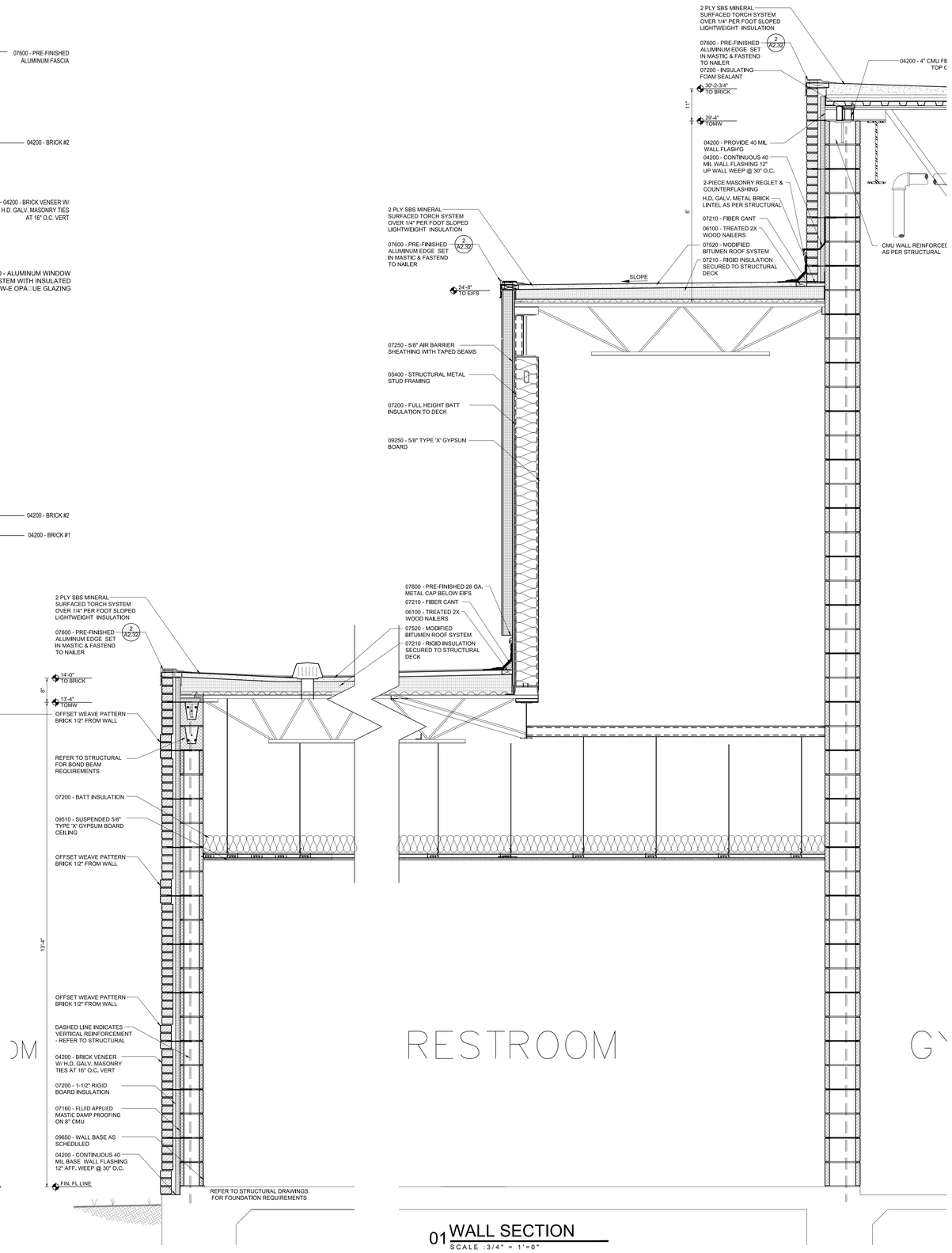

01 WALL SECTION
SCALE : 3/4" = 1'=0"

No.	REVISIONS	BY

GMS ARCHITECTS
1150 Paredes Line Rd.
Brownsville TX 78526
(956) 546-0110
fax (956) 546-0196

BISD Hanna ECHS
Gymnasium Facility

REGISTERED ARCHITECT DAVID A. MONREAL 7955 STATE OF TEXAS
6-14-2019

© Copyright 2019
Gomez Mendez Saenz Inc.
Architects-Planners
Interior Designers

Date:	JUNE, 2019
Scale:	As Noted
Project Architect:	David Monreal, AIA
Drawn By:	RB
Job No.	BISD Hanna Gymnasium
Sheet:	A4.06

Jun 14, 2019 - 4:32pmC:\Users\Station-1\appdata\local\temp\AcPublish_3964\Hanna Gym_WS.dwg

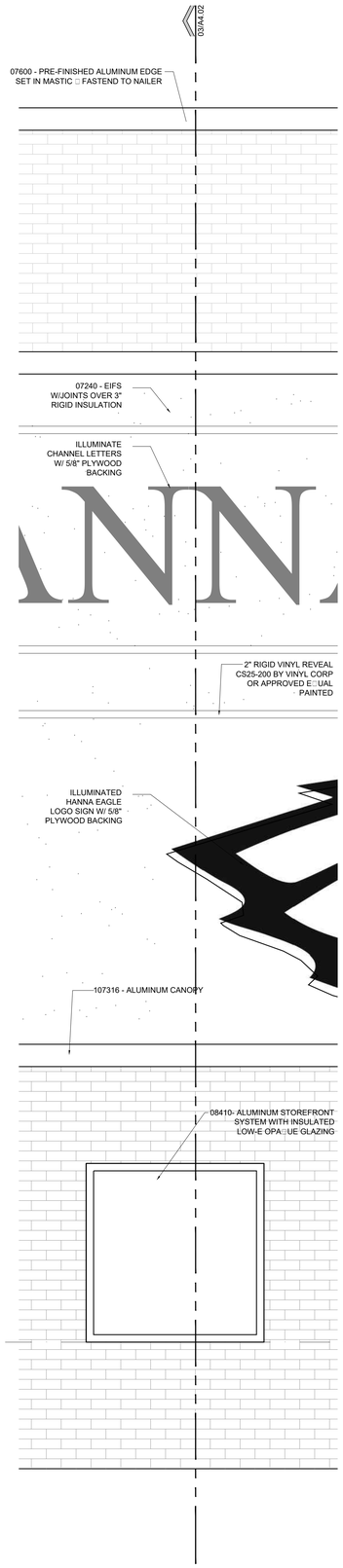

04 PARTIAL ELEVATION
SCALE : 3/4" = 1'=0"

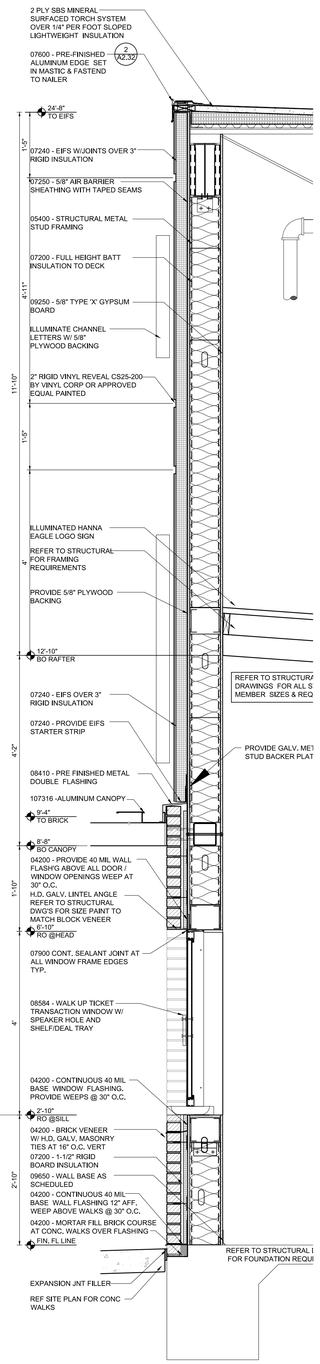

03 WALL SECTION
SCALE : 3/4" = 1'=0"

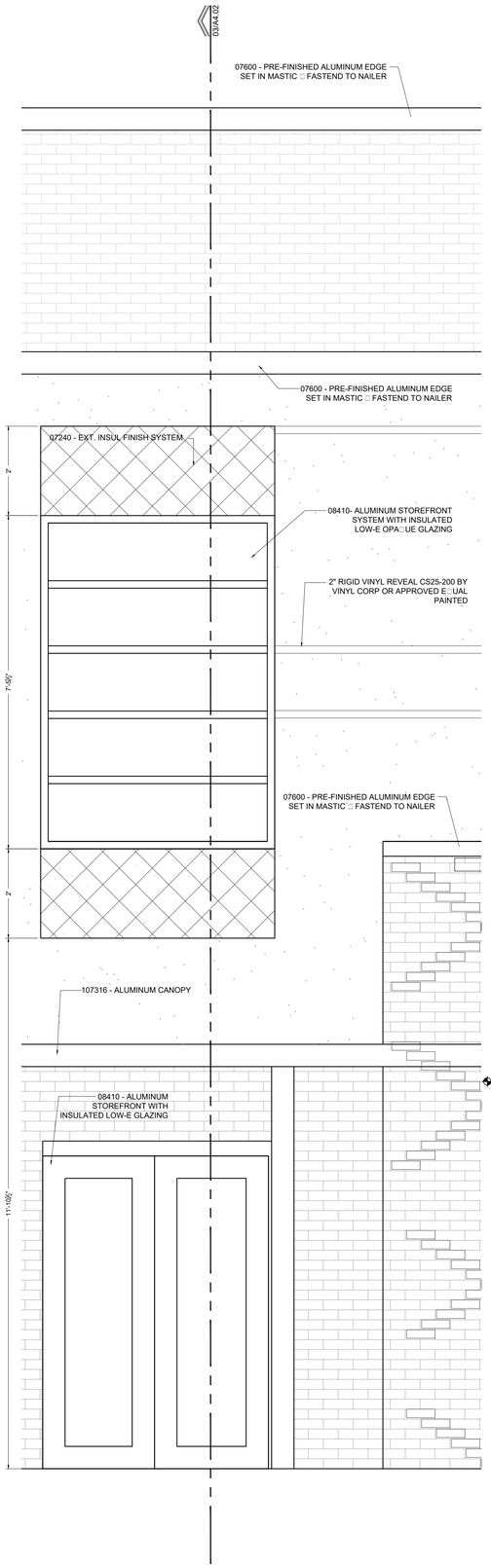

02 PARTIAL ELEVATION
SCALE : 3/4" = 1'=0"

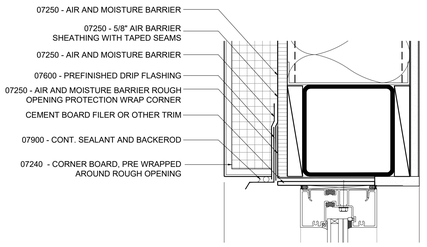

05 WALL SECTION
SCALE : 3/4" = 1'=0"

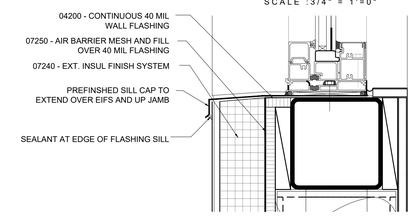

06 WALL SECTION
SCALE : 3/4" = 1'=0"

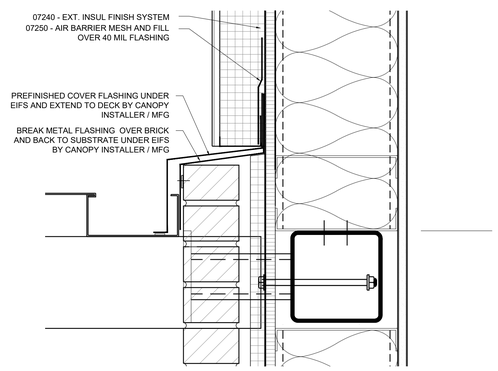

07 WALL SECTION
SCALE : 3/4" = 1'=0"

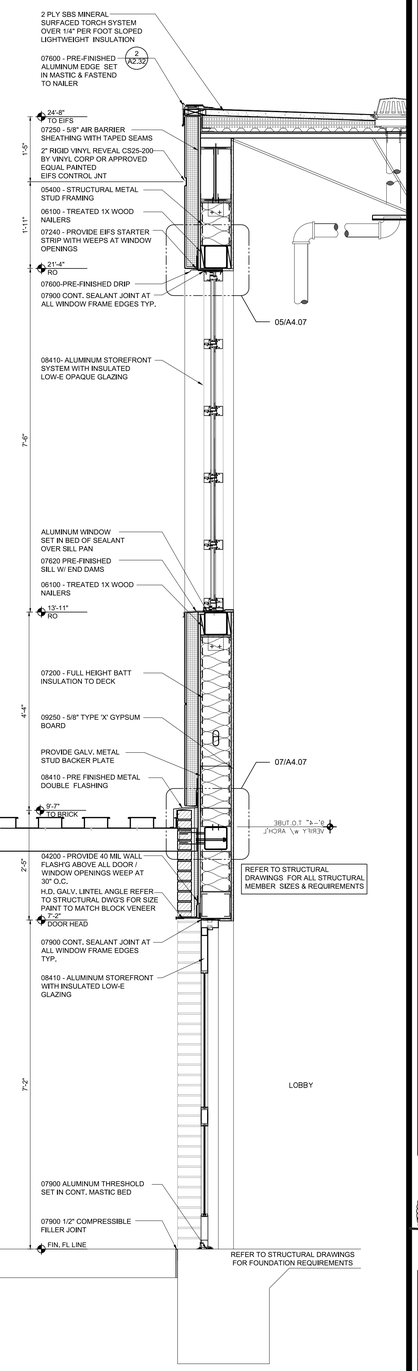

01 WALL SECTION
SCALE : 3/4" = 1'=0"

No.	REVISIONS	BY

GMS ARCHITECTS
1150 Paredes Line Rd.
Brownsville TX 78526
(956) 546-0110
fax (956) 546-0196

BISD Hanna ECHS
Gymnasium Facility

REGISTERED ARCHITECT DAVID A. MONREAL 19556 STATE OF TEXAS
6-14-2019

© Copyright 2019
Gomez Mendez Saenz Inc.
Architects-Planners
Interior Designers

Date: JUNE, 2019
Scale: As Noted
Project Architect: David Monreal, AIA
Drawn By: RB
Job No. BISD Hanna Gymnasium
Sheet:

A4.07

Jun 14, 2019 - 4:32pmC:\Users\Station-1\appdata\local\temp\AcPublish_3964\Hanna Gym_WS.dwg

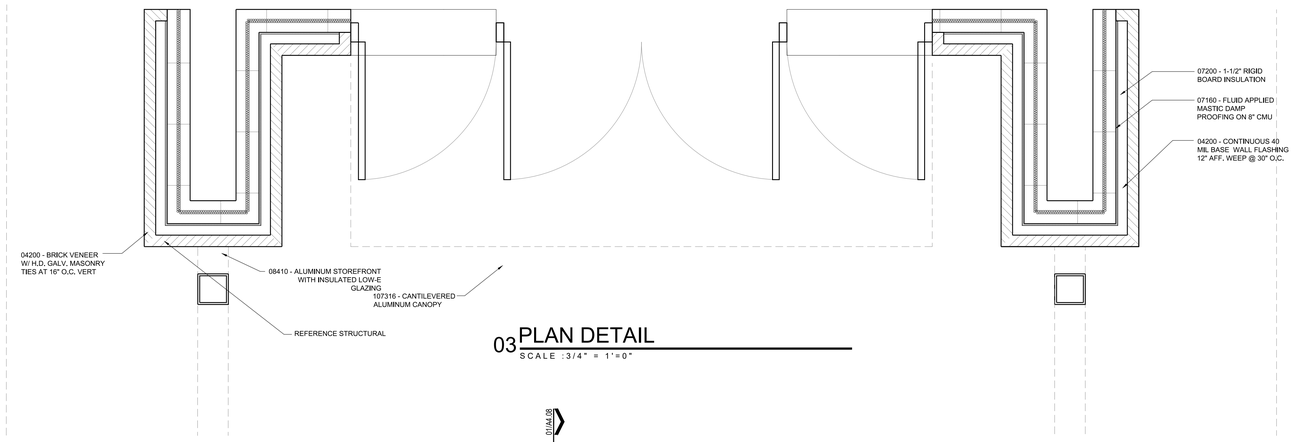

03 PLAN DETAIL
SCALE : 3/4" = 1'=0"

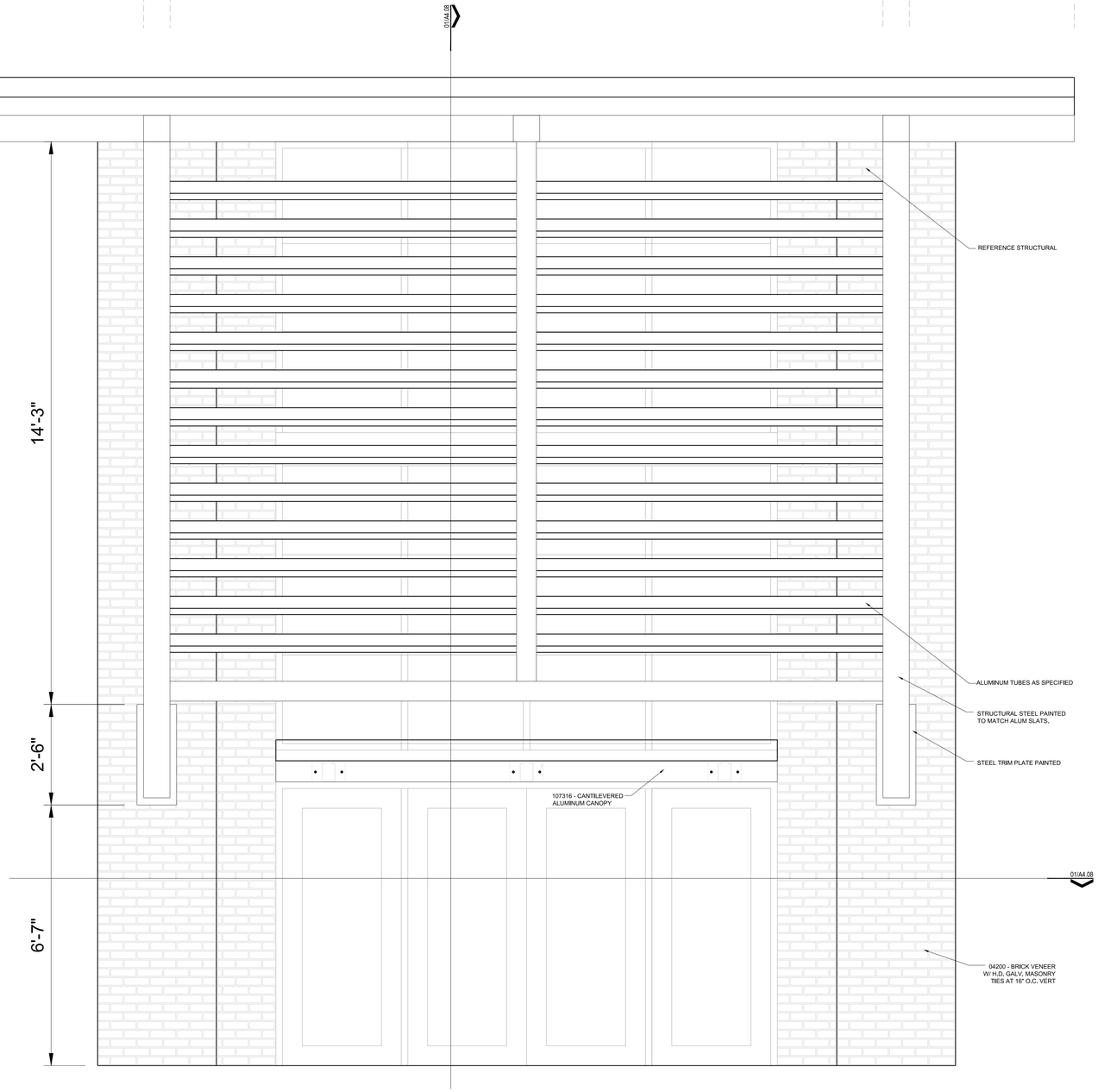

02 ENTRY ELEVATION
SCALE : 3/4" = 1'=0"

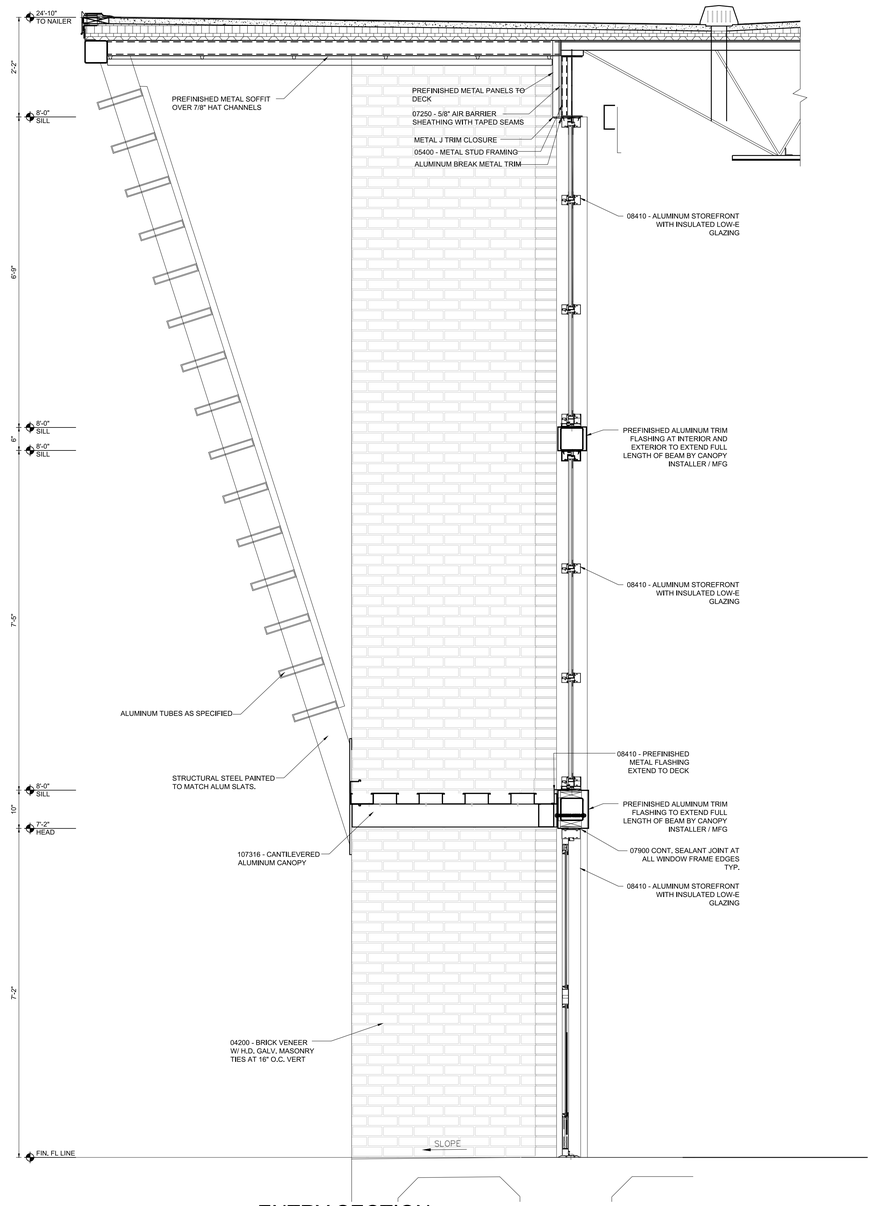

01 ENTRY SECTION
SCALE : 3/4" = 1'=0"

No.	REVISIONS	BY

GMS ARCHITECTS
1150 Paredes Line Rd.
Brownsville TX 78526
(956) 546-0110
fax (956) 546-0196

BISD Hanna ECHS
Gymnasium Facility

REGISTERED ARCHITECT DAVID A. MONREAL 19556 STATE OF TEXAS
6-14-2019

© Copyright 2019
Gomez Mendez Saenz Inc.
Architects-Planners
Interior Designers

Date: JUNE, 2019
Scale: As Noted
Project Architect: David Monreal, AIA
Drawn By: RB
Job No. BISD Hanna Gymnasium
Sheet:
A4.08

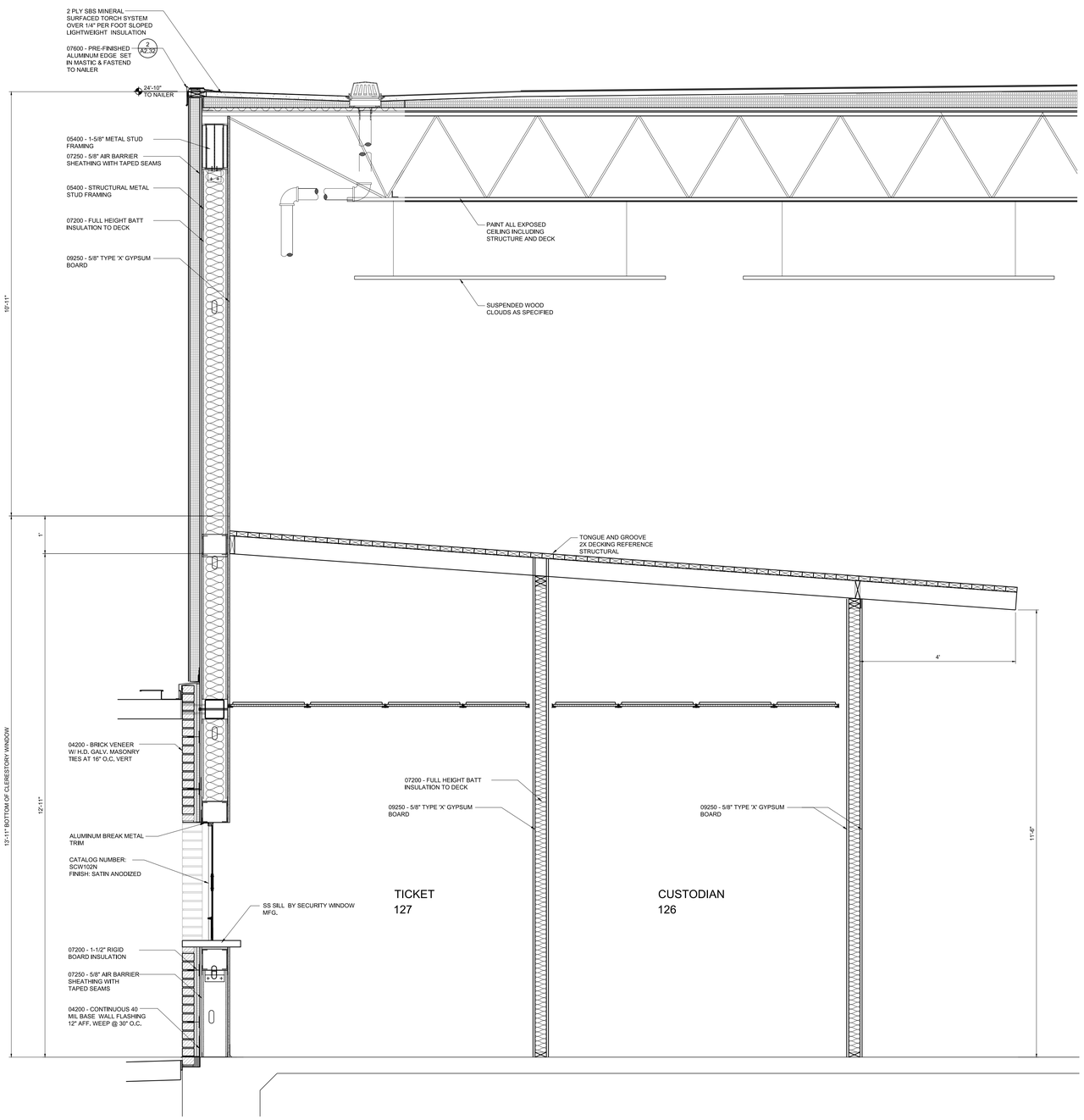

02 CONCESSION SECTION
SCALE : 3/4" = 1'=0"

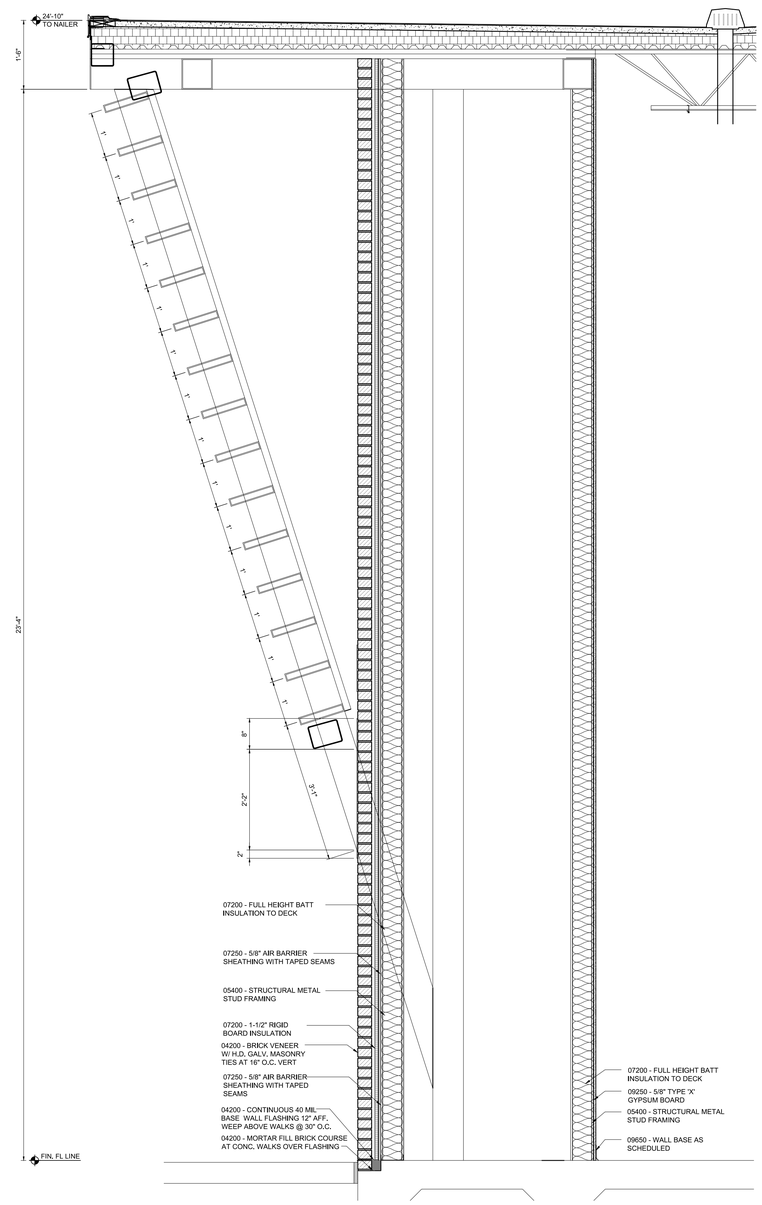

01 ENTRY SECTION
SCALE : 3/4" = 1'=0"

No.	REVISIONS	BY

GMS ARCHITECTS
1150 Paredes Line Rd.
Brownsville TX 78526
(956) 546-0110
fax (956) 546-0196

BISD Hanna ECHS
Gymnasium Facility

REGISTERED ARCHITECT DAVID A. MONREAL 19556 STATE OF TEXAS
6-14-2019

© Copyright 2019
Gomez Mendez Saenz Inc.
Architects-Planners
Interior Designers

Date: JUNE, 2019
Scale: As Noted
Project Architect: David Monreal, AIA
Drawn By: RB
Job No. BISD Hanna Gymnasium
Sheet: A4.09

Jun 14, 2019 - 4:33pmC:\Users\Station-1\appdata\local\temp\AcPublish_3964\Hanna Gym_WS.dwg

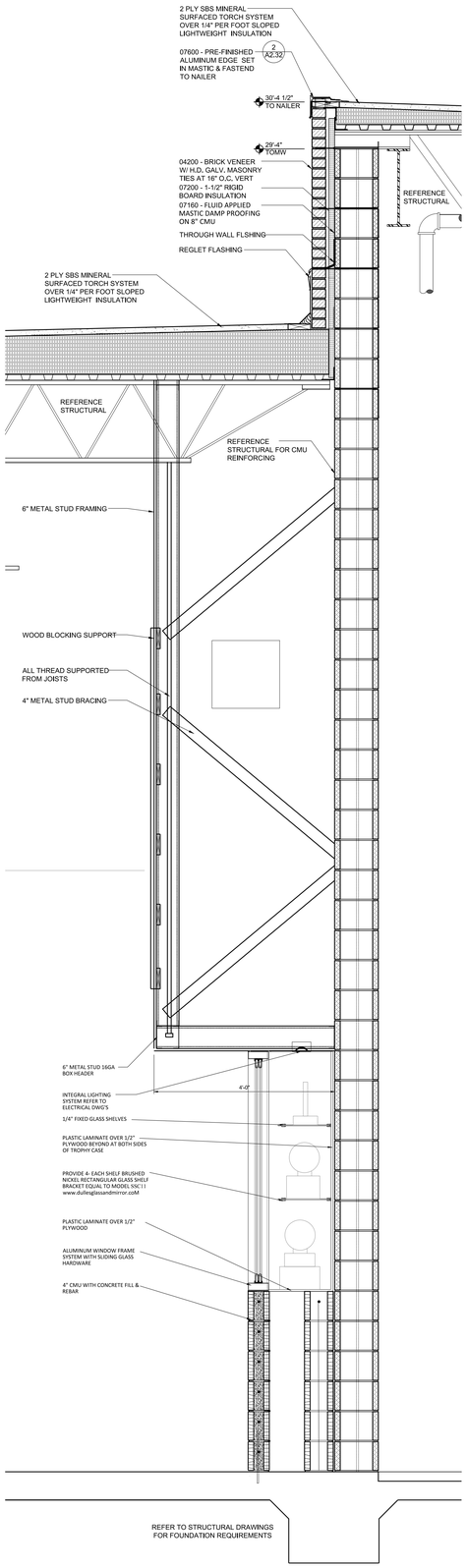

05 WALL SECTION
SCALE : 3/4" = 1'=0"

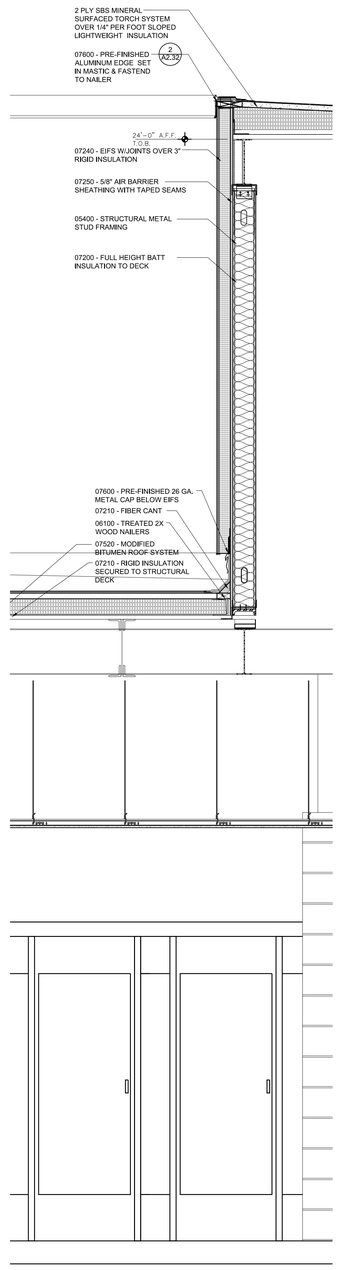

04 WALL SECTION
SCALE : 3/4" = 1'=0"

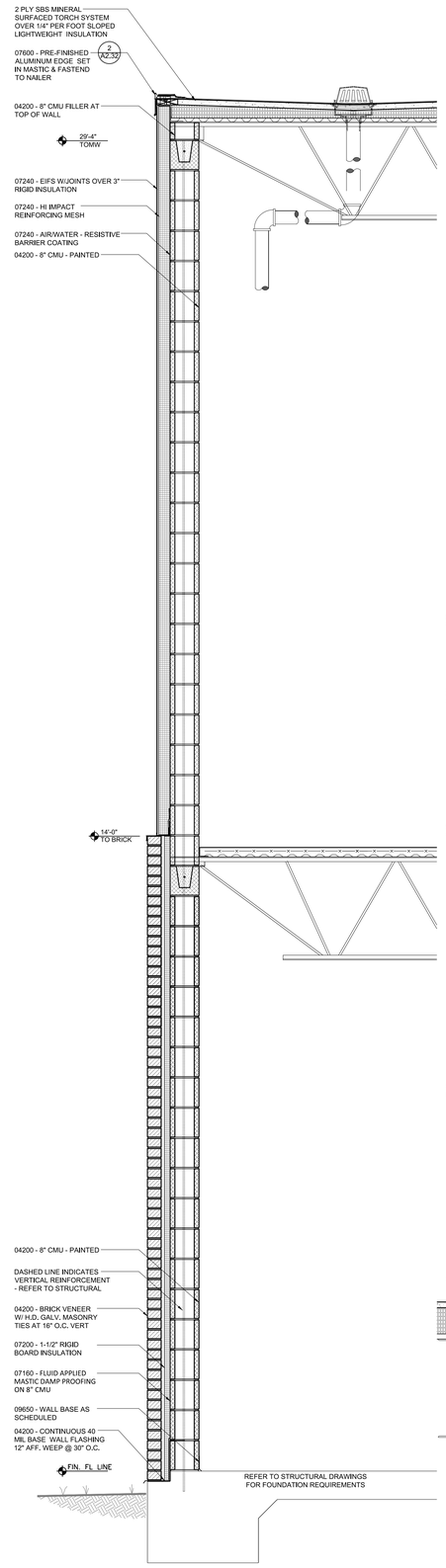

03 WALL SECTION
SCALE : 3/4" = 1'=0"

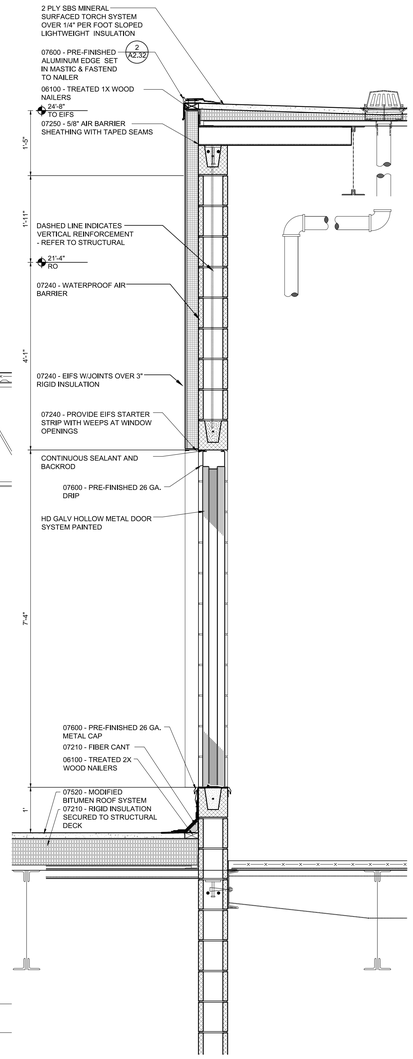

02 WALL SECTION
SCALE : 3/4" = 1'=0"

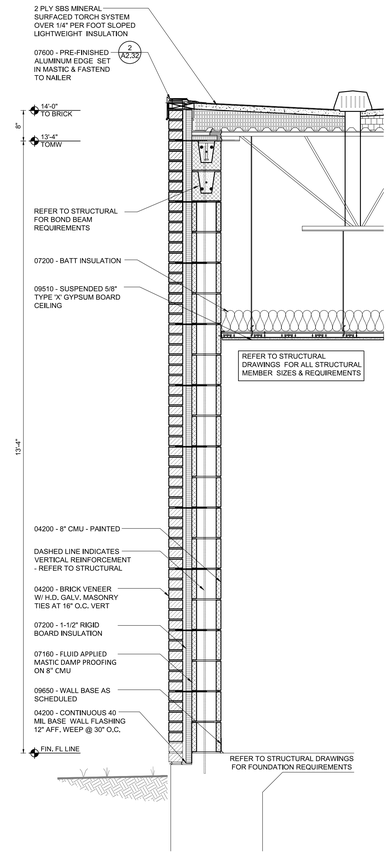

01 WALL SECTION
SCALE : 3/4" = 1'=0"

No.	REVISIONS	BY

GMS ARCHITECTS
1150 Paredes Line Rd.
Brownsville TX 78526
(956) 546-0110
fax (956) 546-0196

BISD Hanna ECHS
Gymnasium Facility

REGISTERED ARCHITECT DAVID A. MONREAL 78556 STATE OF TEXAS
6-14-2019

© Copyright 2019
Gomez Mendez Saenz Inc.
Architects-Planners
Interior Designers

Date: JUNE, 2019
Scale: As Noted
Project Architect: David Monreal, AIA
Drawn By: RB
Job No. BISD Hanna Gymnasium
Sheet: A4.10

Jun 14, 2019 - 4:33pmC:\Users\Station-1\appdata\local\temp\AcPublish_3964\Hanna Gym_WS.dwg

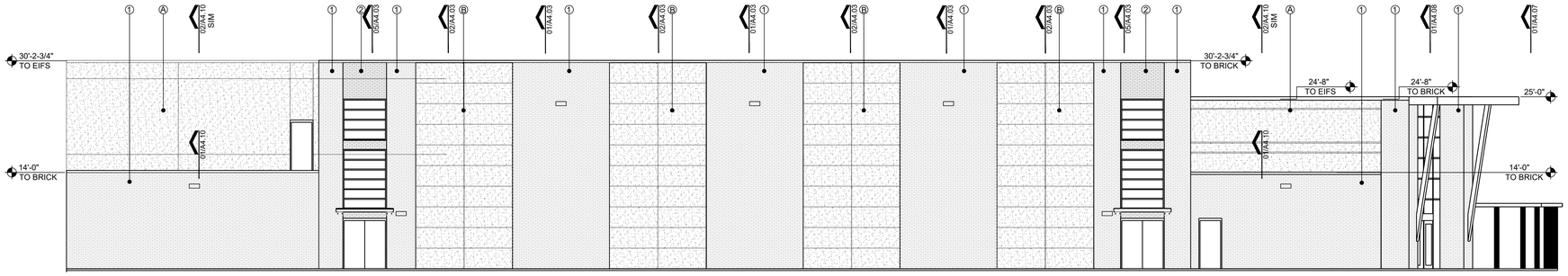

04 WEST ELEVATION
SCALE : 1/8" = 1'=0"

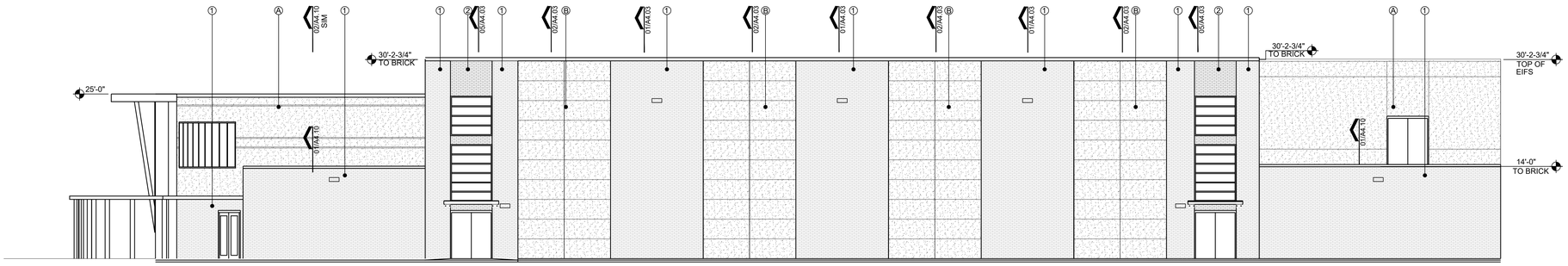

03 EAST ELEVATION
SCALE : 1/8" = 1'=0"

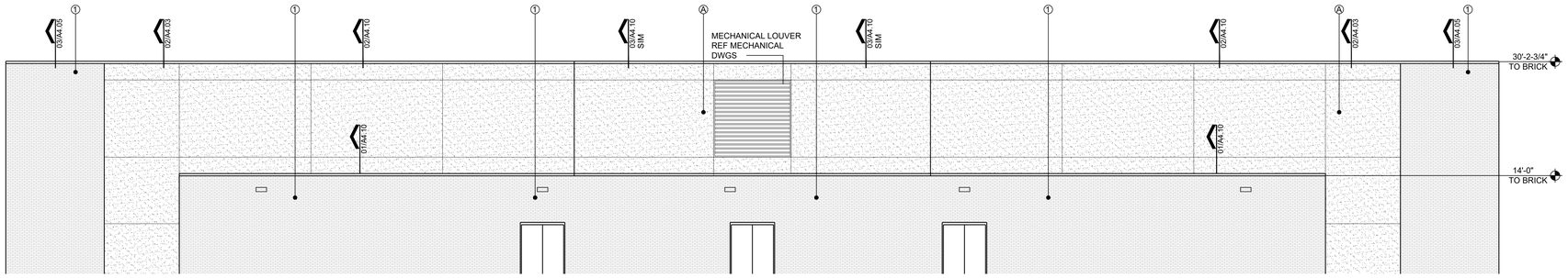

02 SOUTH ELEVATION
SCALE : 1/8" = 1'=0"

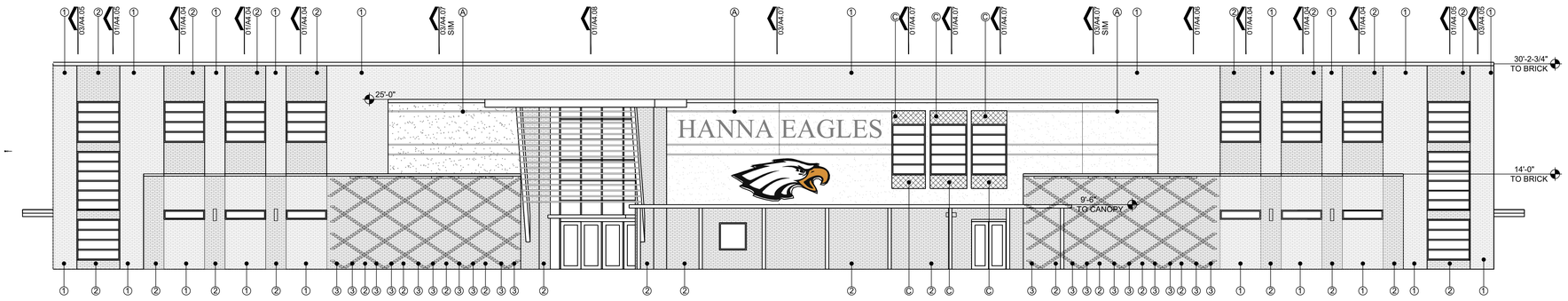

01 NORTH ELEVATION
SCALE : 1/8" = 1'=0"

07240 - EIFS SURFACE
ALLOW FOR ONE FIELD COLOR
□ TWO ACCENT COLORS
(COLORS TO BE SELECTED AT A LATER DATE)
LEGEND

Ⓐ 04200 - BRICK VENEER FIELD COLOR

Ⓑ 04200 - BRICK VENEER ACCENT COLOR 1

Ⓒ 04200 - BRICK VENEER ACCENT COLOR 2

04200 - BRICK VENEER
ALLOW FOR ONE FIELD COLOR
□ TWO ACCENT COLORS
(COLORS TO BE SELECTED AT A LATER DATE)

LEGEND

① 04200 - BRICK VENEER FIELD COLOR

② 04200 - BRICK VENEER ACCENT COLOR 1

③ 04200 - BRICK VENEER ACCENT COLOR 2

No.	REVISIONS	BY

GMS ARCHITECTS
1150 Paredes Line Rd.
Brownsville TX 78526
(956) 546-0110
fax (956) 546-0196

BISD Hanna ECHS
Gymnasium Facility

REGISTERED ARCHITECT
DAVID A. MONREAL
19556
STATE OF TEXAS
6-14-2019

© Copyright 2019
Gomez Mendez Saenz Inc.
Architects-Planners
Interior Designers

Date: JUNE, 2019
Scale: As Noted
Project Architect: David Monreal, AIA
Drawn By: RB
Job No. BISD Hanna Gymnasium
Sheet: A5.01

GENERAL STRUCTURAL NOTES

THESE GENERAL NOTES SHALL APPLY UNLESS OTHERWISE SPECIFICALLY NOTED ON PLANS OR DETAILS. THE CONTRACTOR SHALL VERIFY ALL DIMENSIONS AND SHALL COORDINATE ALL STRUCTURAL PLANS AND DETAILS WITH ARCHITECTURAL & MECHANICAL DRAWINGS BEFORE STARTING WORK. THE ENGINEER SHALL BE NOTIFIED OF ANY DISCREPANCIES PRIOR TO CONSTRUCTION. THE ENGINEER ASSUMES NO RESPONSIBILITY FOR CONTRACTOR MEANS AND METHODS OF CONSTRUCTION OR SITE SAFETY. DESIGN, CONSTRUCTION, WORKMANSHIP AND MATERIALS SHALL COMPLY WITH THE CONTROLLING PROVISIONS OF THE 2012 EDITION OF THE **INTERNATIONAL BUILDING CODE (IBC).**

DESIGN CRITERIA

1. BASIS FOR DESIGN AND CODE COMPLIANCE

   A. GOVERNING BUILDING CODE....................IBC 2012 EDITION

2. WIND DESIGN BASED ON THE GREATER OF:

   A. ASCE 7-10 REQUIREMENTS
   ULTIMATE DESIGN WIND SPEED....................152 MPH (Vasd=118 MPH)
   RISK CATEGORY....................III
   WIND EXPOSURE CATEGORY....................B
   INTERNAL PRESSURE COEFFICIENT (GCpi)....................+/-0.18
   Kzt....................1.0
   Kd....................0.85

   B. ASCE 7-05 REQUIREMENTS
   SERVICE DESIGN WIND SPEED....................120 MPH
   IMPORTANCE FACTOR....................1.0
   WIND EXPOSURE CATEGORY....................B
   INTERNAL PRESSURE COEFFICIENT (GCpi)....................+/-0.18
   Kzt....................1.0
   Kd....................0.85

3. GRAVITY DESIGN

   A. ROOF:
   DEAD LOAD....................SELF-WEIGHT OF STRUCTURE & ROOFING SYSTEM
   LIVE LOAD....................20 PSF
   ADDITIONAL POINT LOADS ....AS NOTED ON DRAWINGS

   B. FLOOR LIVE LOAD:
   MECHANICAL....................125 PSF

4. THESE BUILDINGS ARE DESIGNED TO MEET ASCE 7-05 & ASCE 7-10 WIND PRESSURES. ALL COMPONENTS AND CLADDINGS (E.G. WINDOWS, DOORS, ARCHITECTURAL SIDINGS AND ROOFING); MUST MEET MINIMUM WIND CODE REQUIREMENTS. IN ADDITION, GLAZED EXTERIOR OPENINGS IN THE LOWER 60 FEET OF THE BUILDING SHALL BE IMPACT RESISTANT MEETING ASTM E 1996 FOR LARGE MISSILES OR PROTECTED WITH AN IMPACT RESISTANT COVERING.

5. THE GENERAL CONTRACTOR MUST SUBMIT COMPONENT AND CLADDING WIND PRESSURE & IMPACT RESISTANCE RATINGS AND REQUIRED ATTACHMENT PROCEDURES TO THE STRUCTURAL ENGINEER FOR REVIEW. SUBMITTAL INFORMATION SHALL INCLUDE A THIRD PARTY TESTING REPORT OF THE SUBMITTED ASSEMBLY; REFERENCE EXTERIOR COMPONENTS & CLADDINGS NOTES FOR ADDITIONAL REQUIREMENTS. THE GENERAL CONTRACTOR SHALL CONTACT THE STRUCTURAL ENGINEER TO COORDINATE AND SCHEDULE REQUIRED PERIODIC INSPECTION OF EXTERIOR COMPONENTS AND CLADDINGS.

6. THE GENERAL CONTRACTOR IS RESPONSIBLE FOR PROVIDING CONSTRUCTION SERVICES AS NEEDED TO SATISFY THE REQUIREMENTS OF THE DRAWINGS, THE SPECIFICATIONS, THE REFERENCED BUILDING CODE AND THE TEXAS DEPARTMENT OF INSURANCE WINDSTORM INSPECTION PROGRAM. ALL CONSTRUCTION ADMINISTRATION COSTS ASSOCIATED WITH SUBMITTAL PREPARATION, SUBMITTAL REVIEW, INSPECTION COORDINATION, INCLUDING ALL GENERAL CONDITIONS, OVERHEAD AND PROFIT, SHALL BE INCLUDED IN THE GENERAL CONTRACTOR'S BID.

FOUNDATION DESIGN CRITERIA

1. FOUNDATION DESIGN IS IN ACCORDANCE WITH THE INTERNATIONAL BUILDING CODE, AND IS BASED ON THE GEOTECHNICAL REPORT NO. ABA18-001-00 PREPARED BY RABA-KISTNER CONSULTANTS, INC., McALLEN, TEXAS, DATED FEBRUARY 6, 2018, SUPPLEMENT NO. 1 DATED JUNE 13, 2018, AND SUPPLEMENT NO. 2 DATED MARCH 22, 2019.

   A. BEARING CAPACITY:

   GRADE BEAM (TOTAL LOAD).................... 1.7 KSF
   FOOTINGS (TOTAL LOAD).................... 2.1 KSF

   B. POTENTIAL VERTICAL RISE (PVR).................... 1.0 INCH

   C. DRILLED PIERS ARE SIZED BASED ON THE VALUES BELOW:

DEPTH BELOW EXISTING GRADE (FEET)	ALLOWABLE SIDE SHEAR RESISTANCE (KSF)	ALLOWABLE END BEARING (KSF)
0 TO 8	NEGLECT	NEGLECT
8 TO 15	0.20	NEGLECT
15 TO 25	0.25	3.0
25 TO 35	0.45	5.5
BELOW 35	0.50	5.5

2. GROUNDWATER WAS ENCOUNTERED AT **7.5 FT**. BELOW THE GROUND SURFACE ELEVATION DURING DRILLING OPERATIONS (MAY FLUCTUATE WITH SEASON). CONTRACTOR SHALL DETERMINE ACTUAL GROUNDWATER LEVELS JUST PRIOR TO CONSTRUCTION EXCAVATION ACTIVITIES.

3. THE GEOTECHNICAL ENGINEER OF RECORD SHALL BE RETAINED TO PERFORM TESTING AND INSPECTIONS DURING SITE PREPARATION AND PLACEMENT OF BUILDING PAD FILL AS REQUIRED BY SPECIFICATIONS AND GENERAL STRUCTURAL NOTES.

FOUNDATION NOTES

1. REMOVE **AT LEAST 30 INCHES,** OR AS REQUIRED TO REACH AN **ELEVATION OF 26.50 FT.,** OF THE EXISTING SITE SOIL, VEGETATION, TREE ROOTS, DEBRIS, ETC., FROM THE PROPOSED BUILDING AREA TO A DISTANCE OF 5'-0" OUTSIDE THE BUILDING AREA (EXTERIOR OF THE FOUNDATION, INCLUDING ATTACHED IMPROVEMENTS SUCH AS SIDE WALKS AND CANOPIES). DEPTH OF REMOVAL SHALL BE VERIFIED BY THE GEOTECHNICAL ENGINEER AT THE TIME OF CONSTRUCTION.

2. AFTER TOP SOIL HAS BEEN REMOVED, THE SUBGRADE SHALL BE PROOF-ROLLED WITH APPROPRIATE CONSTRUCTION EQUIPMENT WEIGHING AT LEAST 20 TONS UNTIL THE GRADE OFFERS A RELATIVELY UNYIELDING SURFACE. SOFT SOIL AND YIELDING AREAS, AND AREAS WHERE TREE ROOTS HAVE BEEN REMOVED, SHALL BE OVER EXCAVATED AND REPLACED WITH COMPACTED SELECT FILL IN ACCORDANCE WITH THE REQUIREMENTS BELOW. ALTERNATIVELY, SOFT SOIL AND YIELDING AREAS MAY BE TREATED WITH HYDRATED LIME OR PORTLAND CEMENT PER THE GEOTECHNICAL REPORT REQUIREMENTS.

3. PROOFROLLING OPERATIONS AND EXCAVATION/BACKFILL ACTIVITIES SHOULD BE PERFORMED DURING A PERIOD OF DRY WEATHER AND OBSERVED BY THE GEOTECHNICAL ENGINEER OR HIS REPRESENTATIVE TO DOCUMENT SUBGRADE CONDITIONS AND PREPARATION. IF SUBGRADE SOILS ARE ALLOWED TO BECOME WET OR SATURATED, REMOVAL AND REPLACEMENT OF SOFT SOILS OR LIME STABILIZATION PROCEDURES SHALL BE PERFORMED AT THE CONTRACTOR'S EXPENSE. THE GEOTECHNICAL ENGINEER SHALL BE CONTACTED FOR ADDITIONAL RECOMMENDATIONS, IF REQUIRED.

4. SCARIFY, MOISTURE CONDITION, AND COMPACT THE TOP 6" OF THE EXPOSED SUBGRADE TO 98% OF STANDARD PROCTOR MAXIMUM DRY DENSITY AT OPTIMUM TO +3% ABOVE THE OPTIMUM MOISTURE CONTENT, IN ACCORDANCE WITH TEST METHOD ASTM D-698. MOISTURE CONTENT SHALL BE AS NOTED IMMEDIATELY PRIOR TO PLACING SELECT FILL.

5. RESTORE GRADE USING SELECT FILL, **MINIMUM OF 54 INCHES** OR AS REQUIRED TO PROVIDE THE SPECIFIED **FINISH FLOOR ELEVATION OF 31.50 FT.,** WHICHEVER IS GREATER, AND PROPER SITE DRAINAGE, COMPACTED IN ACCORDANCE WITH THE REQUIREMENTS BELOW. FINISH FLOOR ELEVATIONS SHALL BE VERIFIED WITH ARCHITECT AND CIVIL ENGINEER.

6. SELECT FILL SHALL BE COMPACTED IN THE FIELD IN LIFTS NOT TO EXCEED 8" LOOSE MEASURE (6" COMPACTED LIFT) TO A MINIMUM OF 98% OF STANDARD PROCTOR MAXIMUM DRY DENSITY AT -2% TO +2% OF THE OPTIMUM MOISTURE CONTENT, AS EVALUATED BY ASTM D-698.

7. SELECT FILL MATERIALS SHALL BE CLAYEY SAND (SC), CLAYEY GRAVEL (GC) OR LEAN CLAY (CL), AND COMBINATIONS OF THESE SOILS, WHEN CLASSIFIED IN ACCORDANCE WITH USCS ASTM D2487. SELECT FILL SHALL HAVE A LIQUID LIMIT (LL) LESS THAN 40%, A PLASTICITY INDEX (PI) BETWEEN 7-18 AND NO PARTICLES LARGER THAN 4" IN DIAMETER. IF BLENDED OR MIXED SOILS ARE INTENDED FOR USE, THE GEOTECHNICAL ENGINEER SHOULD BE CONTACTED TO PROVIDE ADDITIONAL RECOMMENDATIONS AND REQUIREMENTS, INCLUDING APPROVAL TO UTILIZE BLENDED OR MIXED SOILS.

8. FOUNDATION CONCRETE SHALL NOT BE PLACED ON SELECT FILL SOILS THAT HAVE BEEN DISTURBED BY RAINFALL OR WATER SEEPAGE. IF BEARING SOILS ARE SOFTENED BY WATER INTRUSION, OR BY DESICCATION, THE UNSUITABLE SOILS SHALL BE REMOVED FROM THE FOUNDATION EXCAVATION AND BE REPLACED WITH PROPERLY COMPACTED SELECT FILL PRIOR TO PLACEMENT OF FOUNDATION CONCRETE. ALL SOIL REMOVAL AND REPLACEMENT COSTS, INCLUDING ASSOCIATED COSTS TO REMOVE AND REINSTALL REINFORCEMENT AND VAPOR BARRIER MATERIALS, SHALL BE THE SOLE RESPONSIBILITY OF THE GENERAL CONTRACTOR. DEPTH OF SOIL REMOVAL AND RECOMPACTION REQUIREMENTS SHALL BE COORDINATED WITH THE GEOTECHNICAL ENGINEER.

FOUNDATION NOTES CONTINUED:

9. SAMPLES OF PROPOSED SELECT FILL SHALL BE FURNISHED TO THE TESTING LABORATORY 7 DAYS PRIOR TO INSTALLATION TO PERMIT TIME FOR SPECIFICATION COMPLIANCE INSPECTION AND REVIEW BY THE GEOTECHNICAL ENGINEER.

10. LABORATORY MOISTURE-DENSITY CURVES SHALL BE DEVELOPED FOR SUBGRADE AND FILL. PROCTOR CURVES AND FIELD DENSITY TESTS SHALL BE SUBMITTED TO THE ENGINEER FOR REVIEW. A MINIMUM OF ONE (1) IN PLACE DENSITY TEST PER 2,000 SQUARE FEET OF SLAB AREA SHALL BE TAKEN ON EACH LIFT DURING PLACEMENT OF SELECT FILL. DENSITY REPORTS SHALL BE TRANSMITTED TO ENGINEER WITHIN 3 DAYS AFTER TESTS ARE MADE.

11. GRAIN SIZE ANALYSIS AND ATTERBERG LIMITS TESTS SHALL BE PERFORMED DURING FILL PLACEMENT AT A RATE OF ONE TEST PER 2,000 CUBIC YARDS OF FILL BROUGHT TO THE SITE. SAMPLES FOR TEST SHALL BE TAKEN FROM JOBSITE MATERIALS.

12. SITE SHALL BE GRADED SO THAT WATER DOES NOT POND WITHIN 10 FEET OF THE PERIMETER FOUNDATION BEAM DURING OR AFTER CONSTRUCTION. THE SLOPE OF THE GROUND SURFACE AWAY FROM THE STRUCTURE SHOULD BE A MINIMUM OF FIVE (5%) PERCENT FOR A DISTANCE OF AT LEAST TEN (10') FEET. ELEVATION OF GROUND SURFACE ADJACENT TO THE FOUNDATION SHOULD BE AT LEAST 6 INCHES BELOW FINISH FLOOR.

13. FINAL DRAINAGE IS VERY IMPORTANT TO THE PERFORMANCE OF THE FOUNDATION. LANDSCAPING, PLUMBING, AND DOWNSPOUT DRAINAGE ARE ALSO VERY IMPORTANT. IT IS VITAL THAT ALL ROOF DRAINAGE BE TRANSPORTED AWAY FROM BUILDINGS SO THAT NO AREAS OF WATER POND AROUND BUILDINGS, WHICH CAN RESULT IN SOIL VOLUME CHANGE UNDER THE FOUNDATION. PLUMBING LEAKS SHOULD BE REPAIRED AS SOON AS POSSIBLE IN ORDER TO MINIMIZE THE MAGNITUDE OF MOISTURE CHANGE UNDER THE SLAB. LARGE TREES AND SHRUBS SHOULD NOT BE PLANTED IN THE IMMEDIATE VICINITY OF THE STRUCTURE, SINCE THE ROOT SYSTEMS CAN CAUSE A SUBSTANTIAL REDUCTION IN SOIL VOLUME IN THE VICINITY OF THE TREE DURING DRY PERIODS. BUSHES AND TREES SHOULD BE PLANTED A REASONABLE DISTANCE AWAY FROM THE STRUCTURE SO THAT THEIR CANOPY OR "DRIP LINE" DOES NOT EXTEND BEYOND THE PERIMETER OF THE FOUNDATION. WATERING OF VEGETATION SHOULD BE PERFORMED IN A TIMELY AND CONTROLLED MANNER. PROLONGED WATERING SHOULD BE AVOIDED.

DRILLED PIERS:

1. CONCRETE MIX FOR ALL DRILLED PIERS SHALL BE DESIGNED TO ACHIEVE MINIMUM OF 4,000 PSI 28-DAY COMPRESSIVE STRENGTH WHEN PLACED WITH A SEVEN (7) INCH (±1) INCH SLUMP.

2. INSTALL ALL PIERS AT THE LOCATIONS AND TO THE DEPTHS INDICATED ON THE DRAWINGS. BID SHALL INCLUDE ALL LABOR, EQUIPMENT, MATERIAL AND GENERAL CONDITIONS REQUIRED FOR INSTALLATION OF STRAIGHT SHAFT DRILLED PIERS WITH CASINGS, AS SHOWN ON THE DRAWINGS.

3. IF DIRECTED BY THE ARCHITECT/ENGINEER, PIERS SHALL BE ADJUSTED IN THE FIELD AS REQUIRED TO MEET DESIGN REQUIREMENTS.

4. PRIOR TO DEVELOPMENT OF THE PIER REINFORCEMENT SUBMITTALS, THE GENERAL CONTRACTOR, FOUNDATION CONTRACTOR, DRILLER, AND THE GEOTECHNICAL ENGINEER SHALL HAVE A PRE-CONSTRUCTION MEETING TO DISCUSS THE CONTRACTOR'S PROPOSED PIER INSTALLATION PROCEDURES. AT THE MEETING, THE CONTRACTOR NEEDS TO PERFORM A "TEST" PIER TO DETERMINE CURRENT SUBSURFACE WATER LEVELS AND THE CONSTRUCTABILITY OF THE STRAIGHT SHAFT DRILLED PIERS SPECIFIED. THE TEST PIER WILL NEED TO BE INSPECTED BY THE GEOTECHNICAL ENGINEER OF RECORD FOR APPROVAL OF THE PROPOSED INSTALLATION PROCEDURES AND/OR ISSUANCE OF ADDITIONAL RECOMMENDATIONS, AS REQUIRED.

5. ALL PIERS SHALL BE CENTERED ON BEAMS UNLESS OTHERWISE SHOWN.

6. DRILL PIER SHAFTS TO THE EXACT SIZE SHOWN. SHAFTS SHALL BE BORED PLUMB WITH A TOLERANCE OF TWO INCHES (2"). INSTALL OFFSET STAKES ON OPPOSITE SIDES OF THE PIER AND USE TO MAINTAIN THE PIER CENTERS AND TO CHECK THE PIER PLUMBNESS. EXCAVATION BOTTOMS SHALL HAVE A MAXIMUM OF ONE INCH (1") OF LOOSE DIRT AND TWO INCHES (2") OF GROUND WATER IMMEDIATELY PRIOR TO PLACING CONCRETE. IF MACHINE CLEANING IS NOT SATISFACTORY TO GEOTECHNICAL ENGINEER, HAND CLEANING WILL BE REQUIRED.

7. EACH PIER SHAFT AND DRILLING OPERATIONS SHALL BE INSPECTED BY QUALIFIED GEOTECHNICAL PERSONNEL TO ENSURE PROPER BEARING AT SCHEDULED ELEVATION AND TO VERIFY STRATAS NOTED IN THE GEOTECHNICAL REPORT. INSPECTIONS SHALL ALSO VERIFY PIER SHAFT DIAMETERS, DEPTH, REINFORCEMENT SIZE, QUANTITIES AND LOCATIONS. INSPECTION REPORTS SHALL BE TRANSMITTED TO ENGINEER WITHIN 3 DAYS OF INSPECTION.

8. PROVIDE SUITABLE ACCESS AND LIGHTING FOR INSPECTION OF THE EXCAVATIONS FOR CLEANLINESS AND FOR CORRECTNESS OF DIMENSIONS AND ALIGNMENT.

9. DUE TO SUBSURFACE STRATIGRAPHY AND WATER LEVELS ENCOUNTERED DURING DRILLING OPERATIONS, IF THE CONTRACTOR CANNOT INSTALL A PIER AT THE SPECIFIED LOCATION OR DEPTH, THE ENGINEER MUST BE CONTACTED IMMEDIATELY FOR FURTHER INSTRUCTIONS.

10. FOR STRAIGHT SHAFT PIERS, CASINGS ARE REQUIRED FOR USE TO CONTROL THE EXCAVATION PROCESS. THE CONTRACTOR SHALL USE CASINGS AND INCLUDE ALL ADDITIONAL COSTS IN THEIR BID. CASING MUST TERMINATE IN CLAYEY SOILS, SHOULD BE METAL WITH AMPLE STRENGTH TO WITHSTAND HANDLING STRESSES, CONCRETE AND EARTH PRESSURES, AND SHALL BE WATERTIGHT.

11. PRECAUTIONS SHOULD BE TAKEN DURING THE PLACEMENT OF THE PIER REINFORCEMENT AND CONCRETE TO PREVENT LOOSE EXCAVATED MATERIAL FROM FALLING INTO THE EXCAVATION.

12. PLACEMENT OF CONCRETE SHALL BE ACCOMPLISHED AS SOON AS POSSIBLE AFTER EXCAVATION IS COMPLETE, REINFORCING CAGE IS PLACED AND INSPECTED, AND APPROVED. THE CONCRETE SHOULD NOT BE ALLOWED TO RICOCHET OFF THE WALLS OF THE PIER EXCAVATION NOR OFF OF THE REINFORCING STEEL. PLACEMENT OF CONCRETE SHALL COMPLY WITH LATEST EDITION OF AMERICAN CONCRETE INSTITUTE (ACI) 318 CODE "BUILDING CODE REQUIREMENTS FOR REINFORCED CONCRETE", ACI 336.3R-14 ENTITLED "SUGGESTED DESIGN AND CONSTRUCTION PROCEDURES FOR PIER FOUNDATIONS", U.S. DEPARTMENT OF TRANSPORTATION-FEDERAL HIGHWAY ADMINISTRATION PUB. NO. FHWA-IF-99-025 "MANUAL ON DRILLED SHAFTS: CONSTRUCTION PROCEDURES AND DESIGN METHODS" AND ADSC: THE INTERNATIONAL ASSOCIATION OF FOUNDATION DRILLING CONTRACTORS PUB. NO. ADSC-TL-4, AUGUST 1999.

13. NO PIER EXCAVATION SHALL BE LEFT OPEN OVERNIGHT WITHOUT CONCRETING.

CONCRETE:

1. ALL CONCRETE WORK SHALL CONFORM TO THE AMERICAN CONCRETE INSTITUTE SPECIFICATION, A.C.I. #301 AND BUILDING CODE REQUIREMENTS, A.C.I. #318, LATEST EDITION.

2. ALL DETAILING, FABRICATION AND ERECTION OF REINFORCING BARS, UNLESS OTHERWISE NOTED, MUST FOLLOW THE A.C.I. "MANUAL OF STANDARD PRACTICE FOR DETAILING REINFORCED CONCRETE", A.C.I. #315, LATEST EDITION.

3. CONCRETE SHALL HAVE A MINIMUM COMPRESSION STRENGTH OF 4,000 PSI AT 28 DAYS.

4. A MAXIMUM OF 25% FLYASH MAY BE USED AS A CEMENT SUBSTITUTE AND SHALL CONFORM TO ASTM C618, CLASS C. THE WATER/CEMENT RATIO SHALL NOT EXCEED 0.6 AND SLUMPS SHALL BE 5 INCHES (±1 INCH). AGGREGATE SHALL BE WELL-GRADED, 1" MAXIMUM FOR THE SLAB ON GRADE, 1" MAXIMUM FOR CAST-IN-PLACE BEAMS AND ABOVE GRADE SLABS. COARSE AGGREGATE SHALL MEET ASTM C33, GRADATION #57. A QUALIFIED TESTING LABORATORY SHALL BE RETAINED TO FURNISH MIX DESIGNS FOR ALL CLASSES OF CONCRETE. A SAMPLE OF FOUR CYLINDERS SHALL BE TAKEN NOT LESS THAN ONCE A DAY, NOR LESS THAN ONCE FOR EACH 100 YD3 OF CONCRETE. ONE CYLINDER SHALL BE TESTED AT 7 DAYS AND TWO AT 28 DAYS. THE FOURTH CYLINDER MAY BE DISPOSED OF AFTER 45 DAYS IF NOT USED.

5. ADMIXTURES CONTAINING WATER SOLUBLE CHLORIDE IONS GREATER THAN 0.06% BY WEIGHT OF CEMENT SHALL NOT BE USED.

6. REINFORCING BARS SHALL BE NEW BILLET STEEL CONFORMING TO ASTM A-615, GRADE 60. #3 BARS MAY BE GRADE 40.

7. WELDED WIRE FABRIC SHALL BE ASTM A185.

8. STANDARD PROTECTIVE COVER OF REINFORCING BARS UNLESS OTHERWISE NOTED SHALL BE:

   WHERE CAST AGAINST DIRT OR FILL .... 3 IN.
   EXPOSED TO EARTH OR WEATHER .... 2 IN.
   SLABS AND WALLS .... 1 IN.
   OTHER .... 1-1/2 IN.

9. ALL ACCESSORIES SHALL BE IN ACCORDANCE WITH THE A.C.I. "MANUAL OF STANDARD PRACTICE FOR DETAILING REINFORCED CONCRETE", A.C.I. #315, LATEST EDITION.

10. SLAB MAT TO BE SUPPORTED BY MASONRY BRICK BATTS (MIN OF 1/2 BRICK) SPACED AT 4 FEET ON CENTER EACH WAY (MAX). BEAM CAGES SUPPORTED BY BATTS AT 4 FEET ON CENTER.

11. VERTICAL CONSTRUCTION JOINTS IN FLOOR SHALL BE COORDINATED WITH STRUCTURAL ENGINEER PRIOR TO FORMING SLAB. CRACK CONTROL JOINTS SHALL BE PROVIDED AT LOCATIONS SHOWN ON THE PLANS. CONTROL JOINTS SHALL BE SAWCUT (IMMEDIATELY SUBSEQUENT TO FINISHING SLAB) WITH "SOFF-CUT" SYSTEM. JOINTS SHALL BE CLEANED AND FILLED WITH "SONOLASTIC SL1" WITHIN TWO (2) DAYS AFTER SAWCUTTING. NO HORIZONTAL JOINTS WILL BE PERMITTED IN SLABS OR BEAMS UNLESS APPROVED BY THE ENGINEER.

12. PROVIDE 2 TOP & BOTTOM CORNER BARS AT ALL DISCONTINUOUS GRADE BEAMS AND FOUNDATION CORNERS. CORNER BARS SHALL BE 4'-0" IN LENGTH (2'-0" LEGS). SIZE OF THE CORNER BARS SHALL MATCH THE SIZE OF THE GRADE BEAM REINFORCING AS SHOWN BY STRUCTURAL DRAWINGS.

13. MAINTAIN A MINIMUM OF ONE AND ONE-HALF (1-1/2) TIMES THE MAXIMUM COARSE AGGREGATE SIZE BETWEEN ALL REINFORCING BARS (EXCEPT AT LAPS).

14. BARS SCHEDULED OR DETAILED "CONT" SHALL BE LAPPED 62 BAR DIAMETERS (36 INCHES MINIMUM) UNLESS OTHERWISE NOTED.

15. WHERE CONCRETE IS TO HAVE UNEXPOSED SURFACES, THE FORMS MAY BE CONSTRUCTED OF #2 LUMBER OR BETTER. WHERE SURFACES ARE EXPOSED, SUCH AS FOR FINISH PAINTING OR STUCCO DASH, THE FORMS SHALL BE COMMERCIAL STANDARD DOUGLAS FIR, MOISTURE-RESISTANT CONCRETE FORM PLYWOOD; MINIMUM 5-PLY AND AT LEAST 9/16" THICK, OR FORMS LINED WITH COMMERCIAL STANDARD DOUGLAS FIR, CONCRETE FORM EXTERIOR, 3-PLY, NOT LESS THAN 1/4" THICK. WHERE CONCRETE IS EXPOSED, A SMOOTH SURFACE IS REQUIRED, FREE FROM FINS, HONEYCOMB, FORM MARKS OR OTHER DEFECTS.

16. EXPOSED SURFACES OF CONCRETE AT THE PERIMETER OF THE FOUNDATION SHALL BE FORMED WITH 2X10 #2 LUMBER OR BETTER. A SMOOTH SURFACE IS REQUIRED, FREE FROM FINS, HONEYCOMB, FORM MARKS OR OTHER DEFECTS.

CONCRETE CONTINUED:

17. CONSTRUCT FORMS SO THAT JOINTS ARE LEAKPROOF. MAINTAIN FORMS SUFFICIENTLY RIGID TO PREVENT DEFORMATION UNDER LOAD.

18. CONCRETE MAY BE PLACED WITH CHUTES UP TO 25' MAXIMUM. SLUMP SHALL NOT EXCEED 6" AT TRUCK DISCHARGE POINT.

19. CONCRETE PLACED BY PUMPING SHALL MEET THE FOLLOWING REQUIREMENTS:

    A. COARSE AGGREGATE SHALL BE GRADED FROM A MAXIMUM OF 1" DOWN

    B. MAXIMUM ALLOWABLE INCREASE IN CEMENT FACTOR SHALL BE 1/2 SACK PER CUBIC YARD OVER NORMAL MIX DESIGN.

    C. MAXIMUM WATER CEMENT RATIO SHALL BE 7-1/2 GALLONS PER SACK OF CEMENT. IF MORE WORKABILITY IS REQUIRED, AN ADMIXTURE MAY BE USED.

    D. MAXIMUM WEIGHT RATIO OF FINE AGGREGATES TO COARSE AGGREGATES SHALL NOT EXCEED 2/3.

    E. REFER TO A.C.I. #301, LATEST EDITION, SECTION 800, FOR OTHER PUMPING REQUIREMENTS.

    F. IN NO CASE SHALL CONCRETE BE PUMPED THROUGH AN ALUMINUM TUBE.

    G. SLUMP SHALL NOT EXCEED 6" AT TRUCK DISCHARGE POINT.

20. FLOOR FINISH (TOLERANCES)

    A. STEEL TROWEL FINISH 1/8" IN 10'

    B. FLOAT FINISH 1/4" IN 10'

    C. SCRATCH FINISH 1/2" IN 10'

21. CONCRETE TO BE CURED IN ACCORDANCE WITH ACI RECOMMENDATIONS. PROPOSED METHOD OF CURING TO BE COORDINATED WITH ENGINEER PRIOR TO CONCRETE PLACEMENT.

22. SHOP DRAWINGS SHALL BE PREPARED FOR ALL REINFORCING STEEL AND SUBMITTED FOR REVIEW BY ENGINEER. SUBMITTALS SHALL INCLUDE ELECTRONIC (PDF) COPIES OF EACH DRAWING. ENGINEERING DRAWINGS SHALL NOT BE REPRODUCED AND USED AS SHOP DRAWINGS.

23. THE CONTRACTOR SHALL REVIEW AND ANNOTATE SHOP DRAWINGS BEFORE SUBMITTING THEM TO THE ARCHITECT/ENGINEER FOR REVIEW. THE CONTRACTOR SHALL ALLOW ARCHITECT/ENGINEER 10 WORKING DAYS FOR REVIEW OF SHOP DRAWINGS.

24. ENGINEER TO BE NOTIFIED 48 HOURS PRIOR TO PLACEMENT OF FOUNDATION AND OF STRUCTURAL CONCRETE TO SCHEDULE REQUIRED OBSERVATIONS.

25. INCLUDE IN BID AN ALLOWANCE FOR **5.0 TON** OF REINFORCING BARS TO BE USED AS DIRECTED IN FIELD FOR SPECIAL CONDITIONS AT A COST OF **$2,000.00 PER TON** (LABOR FOR PLACING SAME TO BE INCLUDED). ANY UNUSED ALLOWANCE WILL BE CREDITED TO THE OWNER AT THE END OF THE PROJECT.

CONCRETE MASONRY

1. THE **GENERAL CONTRACTOR, PROJECT SUPERINTENDENT, TESTING LABORATORY AND THE MASONRY FOREMAN** SHALL MEET WITH THE STRUCTURAL ENGINEER PRIOR TO THE START OF MASONRY WORK TO REVIEW PROJECT REQUIREMENTS AND PROCEDURES.

2. AN INDEPENDENT TESTING LAB SHALL VERIFY PLACEMENT OF VERTICAL REINFORCING IN WALLS AND HORIZONTAL REINFORCING IN BOND BEAMS AND LINTELS PRIOR TO PLACEMENT OF GROUT. INDEPENDENT TESTING LAB SHALL PROVIDE CONTINUOUS VISUAL OBSERVATIONS OF GROUTING PROCEDURES, REBAR PLACEMENT, SITE MIXING OF MORTAR, INSTALLATION OF EMBEDED STEEL CONNECTORS, AND GENERAL PLACEMENT OF MASONRY UNITS AND MORTAR JOINTS. INSPECTION REPORTS ARE TO BE GENERATED DAILY BY THE TESTING LAB. INSPECTION SUMMARY REPORTS SHALL BE EMAILED TO THE STRUCTURAL ENGINEER IN ELECTRONIC (PDF) FORMAT.

3. ALL CONCRETE MASONRY SHALL BE IN ACCORDANCE WITH THE REQUIREMENTS OF THE LOCAL BUILDING CODES AND THE AMERICAN CONCRETE INSTITUTE (ACI 530-02/ ASCE 5-02/ TMS 402-02). DESIGN IS BASED ON MASONRY COMPRESSIVE STRENGTH (f'm) OF 1,900 PSI.

4. HOT AND COLD WEATHER CONSTRUCTION PROCEDURES SHALL BE UTILIZED AS REQUIRED BY THE SPECIFICATIONS AND ACI 530.1.

5. HOLLOW CONCRETE MASONRY UNITS SHALL BE DOMESTIC LIGHTWEIGHT MOISTURE CONTROLLED TYPE I UNITS, CONFORMING TO ASTM C-90-97.

6. MASONRY UNITS SHALL HAVE A MINIMUM AVERAGE COMPRESSIVE STRENGTH OF 1,900 PSI (NET AREA) WHEN TESTED IN ACCORDANCE WITH ASTM C-140, "METHODS OF SAMPLING AND TESTING CONCRETE MASONRY UNITS".

7. MORTAR PROPORTIONS FOR REINFORCED MASONRY SHALL BE ESTABLISHED PER ASTM C270 PROPORTION SPECIFICATIONS, TYPE S USING MASONRY CEMENT. FIELD TESTS OF MORTAR SHALL BE PERFORMED BY A QUALIFIED TESTING LABORATORY IN ACCORDANCE WITH ASTM C780 AT A RATE OF ONE TEST PER 2,000 SF OF WALL SURFACE TO DETERMINE BATCH-TO-BATCH UNIFORMITY OF MORTAR. REFERENCE SPECIFICATIONS FOR NON REINFORCED MASONRY.

8. GROUT FOR ALL REINFORCED HOLLOW MASONRY UNIT WALLS SHALL HAVE A MINIMUM COMPRESSIVE STRENGTH OF 3,000 PSI WITH A MAXIMUM 3/8" AGGREGATE. A MID RANGE WATER REDUCING AGENT SUCH AS "POLYHEED" (MASTER BUILDERS) SHALL BE USED. SLUMP TO BE BETWEEN 8 AND 11 INCHES. **ALL GROUT SHALL BE PUMPED.** PLACING OF GROUT TO FOLLOW AMERICAN CONCRETE INSTITUTE (ACI) RECOMMENDATIONS REGARDING **LOW & HIGH LIFT GROUTING.** MAXIMUM LIFT OF GROUT SHALL NOT EXCEED 5'-0" UNLESS APPROVED BY THE ENGINEER PRIOR TO START OF GROUTING. GROUT TO BE TESTED BY A QUALIFIED TESTING LABORATORY AT A RATE OF ONE TEST PER 25 CY OF GROUT IN ACCORDANCE WITH ASTM C1019.

9. REINFORCING STEEL SHALL CONFORM TO ASTM A-615, GRADE 60. ALL BAR REINFORCING SHALL BE LAPPED 48 BAR DIAMETERS (MIN). BARS SHALL BE PLACED WITHIN 1/2" (CENTERLINE OF BAR TO FACE OF MASONRY) OF LOCATION SHOWN IN STRUCTURAL PLANS. BARS SHALL BE HELD IN POSITION DURING GROUTING WITH BAR POSITIONERS. POSITIONERS SHALL BE LOCATED AT THE BOTTOM AND TOP OF THE WALL AND AT 8 TO 10 FOOT INTERVALS. BARS SPLICED BY NON-CONTACT LAP SPLICES SHALL NOT BE SPACED TRANSVERSELY FARTHER APART THAN ONE-FIFTH THE REQUIRED LENGTH OF LAP NOR MORE THAN 8 INCHES.

10. VERTICAL BARS SHALL EXTEND TO THE TOP OF THE PARAPET WALL OR BOND BEAM WHEN A 16" DEEP BEAM IS SPECIFIED. HOOKED DOWELS SHALL BE PROVIDED AT ROOF BOND BEAMS (W/O PARAPETS) LESS THAN 16" DEEP. DOWELS SHALL BE 30" LONG WITH 12" HOOKS.

11. ALL EXTERIOR MASONRY WALLS SHALL BE REINFORCED WITH 9 GA. HOT DIPPED GALVANIZED HORIZONTAL WIRE REINFORCEMENT (LADDER TYPE) EMBEDDED IN MORTAR JOINTS AT 16" O.C. NOMINAL WIDTH OF JOINT REINFORCING SHALL EQUAL WALL THICKNESS. (INTERIOR WALLS MAY BE MILL GALVANIZED). WIRE REINFORCEMENT SHALL CONFORM TO ASTM DESIGNATION A-82, AND SHALL BE LAPPED AT LEAST 8" WITH AT LEAST ONE CROSS WIRE WITHIN THE LAP. JOINT REINFORCING SHALL BE INSTALLED IN THE FIRST AND SECOND MORTAR BED JOINTS IMMEDIATELY ABOVE AND BELOW ALL OPENINGS. WIRE REINFORCING SHALL BE DISCONTINUOUS AT CONTROL JOINTS.

12. EXTERIOR WALLS SHALL BE BONDED WITH CONCRETE MASONRY UNITS AT BUILDING CORNERS.

13. ONE GROUTED #5 BAR SHALL BE PROVIDED AROUND THE PERIMETER OF ALL WALL OPENINGS AND AT BUILDING CORNERS UNLESS NOTED OTHERWISE ON THE STRUCTURAL PLANS.

14. NEATLY TOOL INTERIOR AND EXTERIOR JOINTS IN MASONRY TO FORM A SLIGHTLY CONCAVE PROFILE WHEN MORTAR IS THUMBPRINT HARD UNLESS SHOWN OTHERWISE. ALL MORTAR JOINTS SHALL BE TOOLED THE ENTIRE HEIGHT OF WALL.

15. BOND BEAMS SHALL BE REINFORCED WITH TWO CONTINUOUS #5 BARS UNLESS NOTED OTHERWISE ON THE STRUCTURAL PLANS. REINFORCING SHALL BE CONTINUOUS AT ALL CORNERS AND INTERSECTING WALLS. (PROVIDE CORNER BARS). WHERE SIDE WALL AND END WALL BOND BEAMS DO NOT COURSE CONTINUE THE LOWER BOND BEAM AROUND THE BUILDING CORNER TO THE FIRST VERTICAL REINFORCED CELL.

16. CONTROL JOINTS SHALL BE CONSTRUCTED WITH SLOTTED MASONRY UNITS AND FACTORY MOLDED JOINT FILLER. JOINTS SHALL BE CAULKED WITH AN APPROVED MATERIAL. JOINTS SHALL BE PROVIDED AT MAXIMUM SPACING OF 22 FT. AND AT ALL LOCATIONS WHERE COLUMNS ARE PLACED IN CMU CELLS. (EXTERIOR AND INTERIOR WALLS). JOINT LOCATIONS, IF NOT SHOWN ON PLANS, SHALL BE COORDINATED WITH ARCHITECT.

17. CONTROL JOINTS SHALL NOT EXTEND THROUGH BOND BEAMS UNLESS INDICATED ON THE STRUCTURAL PLANS.

18. CONTROL JOINTS IN CMU WALLS SHALL NOT BE LOCATED CLOSER THAN 2'-0" FROM AN EDGE OF OPENING WITHOUT REVIEW OF STRUCTURAL ENGINEER.

19. COLUMNS WHICH EXTEND THROUGH BOND BEAMS SHALL BE WRAPPED WITH 2 LAYERS OF 30# BUILDING PAPER. REINFORCING SHALL BE CONTINUOUS PAST COLUMNS WHEN ADEQUATE CLEARANCE EXISTS.

20. LINTELS OVER ALL OPENINGS IN INTERIOR MASONRY PARTITIONS, NOT OTHERWISE COVERED, ARE TO BE OF STANDARD CMU LINTEL BLOCK WITH THICKNESS EQUAL TO WALL THICKNESS. DEPTH SHALL BE 8" FOR OPENINGS UP TO 6'-0", REINFORCED WITH TWO #5's, LOCATED 2-1/2" ABOVE THE BOTTOM EXTERIOR FACE OF THE UNIT.

21. AN L6x4x5/16 (LLH) CONT. (HD GALV) WITH 3/4"øx6" LONG EXP. BOLTS AT ALL FILLED CELLS (40" ON CENTER MAXIMUM) STEEL SHELF ANGLE SHOULD BE PROVIDED AT VENEER TRANSITION LOCATIONS AS REQUIRED BY THE ARCHITECT (COORDINATE SHELF ANGLE HEIGHTS AND LOCATIONS WITH ARCHITECT).

22. INCLUDE IN BID AN ALLOWANCE OF **5.0 TON** OF REINFORCING BARS TO BE USED AS DIRECTED IN FIELD FOR SPECIAL CONDITIONS AT A COST OF **$2,000.00 PER TON** (LABOR AND GROUT FOR PLACING SAME TO BE INCLUDED). ANY UNUSED ALLOWANCE WILL BE CREDITED TO THE OWNER AT THE END OF THE PROJECT.

STRUCTURAL STEEL

1. TOP OF BEAM/PLATE (TOB OR TOP) IS USED INTERCHANGEABLY ON PLANS. REFERENCE APPLICABLE SECTION FOR CLARIFICATION.

2. STRUCTURAL STEEL WIDE FLANGE MEMBERS SHALL CONFORM TO ASTM SPECIFICATION A 572 AND/OR ASTM A 992 (Fy = 50 KSI) UNLESS OTHERWISE SHOWN OR NOTED. PLATE AND ANGLES MAY BE A36 (Fy = 36 KSI).

3. ALL STRUCTURAL STEEL TUBING SHALL CONFORM TO ASTM SPECIFICATION A-500, GRADE B (Fy=46 KSI). STEEL PIPE SHALL COMPLY WITH ASTM A53 TYPE E OR S (Fy=35 KSI).

4. ALL STRUCTURAL STEEL SHALL BE DESIGNED, FABRICATED AND ERECTED IN ACCORDANCE WITH THE LATEST SPECIFICATIONS OF THE AMERICAN INSTITUTE OF STEEL CONSTRUCTION AND STEEL JOIST INSTITUTE.

5. ALL STEEL BAR JOISTS SHALL BE DESIGNED AND FABRICATED BY A MEMBER OF THE STEEL JOIST INSTITUTE. IF REQUESTED BY THE A/E, THE CONTRACTOR SHALL PROVIDE WRITTEN CERTIFICATE OF FABRICATOR'S MEMBERSHIP TO THE STEEL JOIST INSTITUTE AT TIME OF SHOP DRAWING SUBMITTAL.

6. BAR JOISTS SHALL BE BOLTED WHERE COLUMNS ARE FRAMED WITH STRUCTURAL STEEL MEMBERS IN ONLY ONE DIRECTION TO PROVIDE LATERAL STABILITY DURING CONSTRUCTION/ERECTION AS REQUIRED BY OSHA.

7. TOTAL LOAD DEFLECTION OF SPECIAL BAR JOIST SHALL NOT EXCEED L/240, UNLESS NOTED OTHERWISE.

8. JOIST MANUFACTURER SHALL PROVIDE BRIDGING AS REQUIRED TO ADEQUATELY BRACE JOISTS AGAINST LATERAL MOVEMENT AND NET UPLIFT OF 25 PSF.

9. ALL BOLTS SHALL BE 3/4 DIAMETER ASTM A325. WASHERS SHALL BE PROVIDED AT OVERSIZED HOLES AND AT SLOTTED CONNECTIONS AT EXPANSION JOINTS. A325 CONNECTIONS SHALL BE BEARING TYPE CONNECTIONS UNLESS NOTED OTHERWISE. ANCHOR BOLTS MAY BE ASTM A307 UNLESS NOTED OTHERWISE.

10. REFER TO ARCHITECTURAL & MECHANICAL PLANS FOR VERIFICATION OF ALL BOLTS, BLOCKING ANCHORS, ETC., FOR THE ANCHORAGE OF THEIR RESPECTIVE ITEMS.

11. ALL BEAMS AND COLUMNS SHALL BE FULL LENGTH WITHOUT SPLICES UNLESS INDICATED ON PLANS OR APPROVED BY THE ENGINEER IN WRITING.

12. ALL SHOP AND FIELD WELDS SHALL BE MADE BY WELDERS WHO HAVE BEEN QUALIFIED AND CERTIFIED TO MAKE THE REQUIRED WELDS IN ACCORDANCE WITH THE LATEST AMERICAN WELDING SOCIETY SPECIFICATIONS (A.W.S. D-1.1).

13. WELDS SHALL BE MADE WITH COVERED MILD STEEL ELECTRODES COMPLYING WITH AWS D1-72 CODE AND SERIES E 70XX.

14. ERECTION CONNECTORS SHALL BE PROVIDED IN ORDER TO PROPERLY ALIGN AND BE TRUE AND PLUMB WHEN WELDS ARE MADE.

15. ALL COMPLETE PENETRATION WELDS, BOTH SHOP AND FIELD, SHALL BE TESTED BY A QUALIFIED TESTING LABORATORY UTILIZING ULTRA SONIC TESTING PROCEDURES IN ACCORDANCE WITH A.W.S. D-1.1. ANY WELDS FOUND DEFECTIVE SHALL BE REMOVED AND REPLACED AT NO ADDITIONAL COST TO THE OWNER. ALL X-RAYED WELDS SHALL BE GROUND SMOOTH.

16. THE FABRICATOR SHALL SUPPLY BACK-UP PLATES AND EXTENSION TABS FOR ALL COMPLETE PENETRATION WELDS.

17. ALL STEEL MEMBERS, UNLESS NOTED OTHERWISE, SHALL BE PAINTED W/ ONE COAT OF SHOP PRIMER. DO NOT PRIME ITEMS TO BE EMBEDDED IN CONCRETE OR FIRE PROOFED W/ SPRAY ON MATERIAL WITHOUT COORDINATION W/ THE ARCHITECT. GALVANIZED DECK SHALL BE CONFORM TO ASTM A525, G60 (MINIMUM).

18. REINFORCE STEEL DECK OPENINGS (FLOOR & ROOF) FROM 6" TO 18" WITH 2x2x1/4 STEEL ANGLES. PLACE ANGLES PERPENDICULAR TO FLUTES, EXTEND MINIMUM OF TWO FLUTES BEYOND EACH SIDE OF OPENING AND WELD DECK AT EACH FLUTE. OPENING LARGER THAN 18" SHALL BE REINFORCED WITH 3x3x1/4 STEEL ANGLES WELDED TO TOP CHORD OF BAR JOISTS UNLESS SHOWN OTHERWISE ON PLANS. WELD DECK TO ANGLE AT 6" o/c AT PERIMETER OF OPENINGS.

19. STEEL LINTELS SUPPORTING BRICK VENEER AT EXTERIOR SHALL BE HOT-DIPPED GALVANIZED UNLESS NOTED OTHERWISE.

20. WELDED HEADED STUDS (WHS) SHALL BE "NELSON ANCHORS", OR EQUAL, Fs = 60 KSI, DIAMETER AND LENGTH AS SHOWN ON PLANS. STUDS TO BE WELDED& SHOP TESTED IN ACCORDANCE W/ THE MANUFACTURER'S RECOMMENDATIONS.

21. AFTER ERECTION, PRIME WELDS, ABRASIONS AND SURFACES NOT PRIMED. USE PRIMER CONSISTENT WITH SHOP COAT. GALVANIZED SURFACES (HOT DIPPED OR COLD) SHALL BE CLEANED AND PAINTED WITH "ZRC".

22. FIELD WELDS AND BOLTED CONNECTIONS SHALL BE VISUALLY INSPECTED BY A QUALIFIED INDEPENDENT INSPECTOR. THE INSPECTOR SHALL PROVIDE A WRITTEN REPORT TO THE STRUCTURAL ENGINEER.

23. A SINGLE ELECTRONIC FILE (PDF FORMAT) SHOP DRAWINGS SHALL BE PREPARED FOR ALL STRUCTURAL STEEL COMPONENTS AND SUBMITTED FOR REVIEW BY ENGINEER. ENGINEERING DRAWINGS SHALL NOT BE REPRODUCED AND USED AS SHOP DRAWINGS.

24. THE CONTRACTOR SHALL REVIEW AND ANNOTATE SHOP DRAWINGS BEFORE SUBMITTING THEM TO THE ARCHITECT/ENGINEER FOR REVIEW. THE CONTRACTOR SHALL ALLOW ARCHITECT/ENGINEER 10 WORKING DAYS FOR REVIEW OF SHOP DRAWINGS.

25. THE STRUCTURAL ENGINEER SHALL BE NOTIFIED FOR A FRAMING OBSERVATION IMMEDIATELY AFTER ROOF PANELS ARE INSTALLED AND BEFORE INSTALLATION OF THE CEILING.

26. INCLUDE IN BID AN ALLOWANCE FOR **5.0 TON** OF FABRICATED AND PRIMED STRUCTURAL STEEL TO BE USED AS DIRECTED IN THE FIELD FOR SPECIAL CONDITIONS AT A COST OF **$4,000.00 PER TON** (LABOR FOR ERECTING SAME TO BE INCLUDED). ANY UNUSED ALLOWANCE WILL BE CREDITED TO THE OWNER AT THE END OF THE PROJECT.

FASTENERS

1. CAST-IN-PLACE AND POST-INSTALLED ANCHORS SHALL BE PER ANCHOR DIAMETER AND EMBEDMENT DEPTH NOTED ON THE DRAWINGS. POST-INSTALLED ANCHORS SHALL BE UTILIZED ONLY WHERE SPECIFIED. ALL ANCHORS SHALL BE HOT-DIPPED GALVANIZED PER ASTM A153.

2. ALL ANCHORS NOTED BELOW SHALL BE INSTALLED IN ACCORDANCE WITH THE MANUFACTURER'S RECOMMENDATIONS. CONTRACTOR SHALL CONTACT MANUFACTURER'S REPRESENTATIVE FOR THE INITIAL TRAINING AND INSTALLATION OF ANCHORS, AND FOR PRODUCT RELATED QUESTIONS AND AVAILABILITY.

3. SPECIAL INSPECTIONS SHALL BE PROVIDED FOR ALL MECHANICAL AND ADHESIVE ANCHORS PER THE APPLICABLE EVALUATION REPORT NOTED BELOW. SPECIAL INSPECTIONS SHALL BE PERFORMED BY INDEPENDENT TESTING LABORATORY PERFORMING QA/QC SERVICES ON PROJECT.

4. EXPANSION BOLTS (EB) IN CONCRETE/CMU SHALL BE TESTED AND QUALIFIED FOR USE IN ACCORDANCE WITH ACI 355.2 AND ICC-ES AC193. ACCEPTABLE PRODUCTS:

   A. KWIK BOLT III (ICC-ES ESR-2302) BY HILTI (CONCRETE)

   B. KWIK BOLT III (ICC-ES-ESR-1385) BY HILTI (MASONRY)

   C. STRONG-BOLT 2 (ICC-ES ESR-3037) BY SIMPSON STRONG-TIE (CONCRETE)

   D. WEDGE-ALL ANCHOR (ICC-ES ESR-1396) BY SIMPSON STRONG-TIE (MASONRY)

5. HEAVY DUTY SLEEVE ANCHORS IN CONCRETE/CMU SHALL BE TESTED AND QUALIFIED OR USE IN ACCORDANCE WITH ACI 355.2 AND ICC-ES AC193. EXPANSION BOLTS (EB) SHALL NOT BE SUBSTITUTED FOR SLEEVE ANCHORS WITHOUT PRIOR WRITTEN APPROVAL BY STRUCTURAL ENGINEER. ACCEPTABLE PRODUCTS:

   A. HSL-3 (ICC-ES ESR-1545) BY HILTI (CONCRETE)

6. SCREW ANCHORS IN CONCRETE SHALL BE TESTED AND QUALIFIED FOR USE IN ACCORDANCE WITH ACI 355.2 AND ICC-ES AC193. ACCEPTABLE PRODUCTS:

   A. KWIK HUS-EZ (ICC-ES ESR-3027) BY HILTI (CONCRETE)

   B. KWIK HUS-EZ (ICC-ES ESR-3056) BY HILTI (MASONRY)

   C. TITEN HD (ICC-ES ESR-2713) BY SIMPSON STRONG-TIE (CONCRETE)

   D. TAPCON ANCHORS (ICC-ES ESR-1671) (MASONRY)

   E. POWERS WEDGE BOLT (ICC-ES ESR-1678) (MASONRY)

7. UNDERCUT ANCHORS IN CONCRETE SHALL BE TESTED AND QUALIFIED FOR USE IN ACCORDANCE WITH ACI 355.2 AND ICC-ES AC193. ACCEPTABLE PRODUCTS:

   A. HDA (ICC-ES ESR-1546) BY HILTI (CONCRETE)

   B. TORQ-CUT (ICC-ES ESR-2705) BY SIMPSON STRONG-TIE (CONCRETE)

8. POWDER ACTUATED FASTENERS IN CONCRETE/CMU SHALL BE TESTED AND QUALIFIED FOR USE IN ACCORDANCE WITH ACI 355.2 AND ICC-ES AC193. ACCEPTABLE PRODUCTS:

   A. X-U (ICC-ES ESR-2269) BY HILTI (CONCRETE/MASONRY/STEEL)

   B. POWDER ACTUATED FASTENERS (ICC-ES ESR-2138) BY SIMPSON STRONG TIE CONCRETE/MASONRY)

9. ADHESIVE ANCHORS IN CONCRETE/CMU SHALL BE TESTED AND QUALIFIED FOR USE IN ACCORDANCE WITH ACI 355.4 AND ICC-ES AC308. ACCEPTABLE PRODUCTS:

   A. HIT-RE 500-V3 (ICC-ES ESR-3814) BY HILTI (CONCRETE)

   B. HIT-HY 270 (ICC-ES ESR-4143) BY HILTI (MASONRY)

   C. SET-XP (ICC-ES ESR-2508) BY SIMPSON STRONG-TIE (CONCRETE)

   D. SET (ICC-ES ESR-1772) BY SIMPSON STRONG-TIE (MASONRY)

FASTENERS CONTINUED:

10. J-BOLTS SHALL BE FABRICATED FROM ASTM A36/A307 ROD. BOLTS, NUTS AND WASHERS SHALL BE GALVANIZED. EXPANSION BOLTS/SLEEVE ANCHORS SHALL NOT BE SUBSTITUTED FOR J-BOLTS WITHOUT PRIOR WRITTEN APPROVAL BY STRUCTURAL ENGINEER.

11. HEADED ANCHOR RODS SHALL BE FABRICATED FROM ASTM F1554 MATERIAL, FY=36 KSI.

12. SUBSTITUTION REQUESTS FOR PRODUCTS LISTED ABOVE SHALL BE SUBMITTED BY THE CONTRACTOR TO THE STRUCTURAL ENGINEER ALONG WITH CALCULATIONS THAT ARE PREPARED & SEALED BY A REGISTERED PROFESSIONAL ENGINEER. THE CALCULATIONS SHALL DEMONSTRATE THAT THE SUBSTITUTED PRODUCT IS CAPABLE OF ACHIEVING THE PERTINENT EQUIVALENT PERFORMANCE VALUES OF THE SPECIFIED PRODUCT USING THE APPROPRIATE DESIGN PROCEDURE AND/OR STANDARDS. SUBSTITUTED ANCHORS SHALL HAVE A VALID CURRENT EVALUATION (ICC-ES OR IAPMO-ES) REPORT.

13. REFERENCE STRUCTURAL STEEL NOTES FOR BOLTS CONNECTING STRUCTURAL STEEL COMPONENTS.

LIGHTWEIGHT STEEL FRAMING (STEEL STUDS)

1. THE **GENERAL CONTRACTOR, PROJECT SUPERINTENDENT AND THE LIGHTWEIGHT STEEL FRAMING FOREMAN** SHALL MEET WITH THE STRUCTURAL ENGINEER PRIOR TO THE START OF LIGHTWEIGHT STEEL FRAMING WORK TO REVIEW PROJECT REQUIREMENTS AND PROCEDURES.

2. ALL STUDS AND ACCESSORIES SHALL BE OF THE TYPE, SIZE, GAUGE AND SPACING SHOWN ON THE DRAWINGS.

3. ALL STUDS AND JOIST MEMBERS 16 GAUGE AND HEAVIER SHALL BE FORMED FROM STEEL CORRESPONDING TO A TYPE LISTED IN THE A.I.S.I. "SPECIFICATION FOR THE DESIGN OF COLD-FORMED STEEL STRUCTURAL MEMBERS", WITH A MINIMUM YIELD STRENGTH OF 33 KSI UNLESS SPECIFICALLY NOTED OTHERWISE.

4. ALL 18 GAUGE AND LIGHTER MEMBERS, TRACK, BRIDGING, AND ACCESSORY ITEMS SHALL BE FORMED FROM STEEL "SPECIFICATION FOR THE DESIGN OF COLD-FORMED STEEL STRUCTURAL MEMBERS", WITH A MINIMUM YIELD STRENGTH OF 33 KSI UNLESS SPECIFICALLY NOTED OTHERWISE.

5. ALL FRAMING PRODUCTS SHALL BE FORMED FROM STEEL POSSESSING A COATING CORRESPONDING TO THE MINIMUM REQUIREMENTS OF ASTM C955.

6. ALL FRAMING COMPONENTS SHALL BE CUT SQUARELY FOR ATTACHMENT TO PERPENDICULAR EMBERS, OR, AS REQUIRED, FOR AN ANGULAR FIT AGAINST ABUTTING MEMBERS.

7. ALL FIELD CUTTING OF STUDS MUST BE DONE BY SAWING OR SHEARING. TORCH CUTTING OF COLD FORMED MEMBERS IS UNACCEPTABLE.

8. WHEN REQUIRED FOR BRIDGING PURPOSES, THE FRAMING FABRICATOR IS TO ENSURE PUNCH OUT ALIGNMENT WHEN ASSEMBLING FRAMING AND FIELD CUTTING STUDS TO LENGTH. REFER TO TYPICAL STUD/TRACK CONNECTION AND INDEXING DETAILS.

9. NO SPLICES IN STUDS, JOISTS, OR OTHER LOAD CARRYING MEMBERS MAY BE MADE WITHOUT PRIOR ENGINEERING REVIEW AND SPECIFIC DETAILS FOR ANY SUCH SPLICE(S).

10. NO NOTCHING OR COPING OF STUDS, JOISTS OR RAFTERS IS ALLOWED, UNLESS STATED WITHIN THIS DRAWING PACKAGE.

11. WHERE SPLICING OF WALL TRACK IS NECESSARY BETWEEN STUDS, A PIECE OF STUD SHALL BE PLACED IN THE ADJOINING TRACK SECTIONS AND FASTENED TO THE TRACK FLANGES AT BOTH SIDES OF THE WALL OR THE TRACKS SHALL BE BUTTED TIGHT TOGETHER AND FASTENED TO STRUCTURE EITHER SIDE OF THE JOINT.

12. FOR ALL TRACKS USED IN COMPOSITE MEMBERS SUCH AS TRUSSES, POSTS, HEADERS AND JAMBS, THE TRACK MUST BE INSTALLED AS A SINGLE PIECE; NO SPLICING IS PERMITTED.

13. ALL SCREWS SHALL BE OF THE DIAMETER AND SIZE INDICATED ON THE DRAWINGS, AND SHALL BE THOSE MANUFACTURED AND TESTED BY ITW BUILDEX OR EQUIVALENT. A MINIMUM ½ INCH EDGE DISTANCE AND 1/2 INCH SCREW SPACING IS REQUIRED, UNLESS NOTED OTHERWISE ON THE DRAWINGS. SCREW PENETRATION THROUGH JOINED MATERIALS SHALL NOT BE LESS THAN THREE EXPOSED THREADS. SCREW DESIGN IS BASED ON A TYPE 'T3' SCREW. (UNLESS NOTED OTHERWISE)

14. ALL POWDER ACTUATED FASTENERS (P.A.F.) SUBJECTED TO TENSION SHALL HAVE A 15MM (MINIMUM) DIAMETER STEEL WASHERS. THE FOLLOWING MINIMUM EDGE DISTANCES AND FASTENER SPACING APPLY:

	EDGE DISTANCE		MINIMUM SPACING		PENETRATION	
PIN DIAMETER	STEEL	CONCRETE	STEEL	CONCRETE	STEEL	CONCRETE
0.157"ø	1/2"	3"	1"	4"	FULL	1.1/4"

ROUGH CARPENTRY NOTES

1. ROUGH CARPENTRY SHALL COMPLY WITH THE PROVISIONS OF THE 2012 EDITION OF THE INTERNATIONAL BUILDING CODE AND THE NATIONAL DESIGN STANDARD, SPECIAL DESIGN PROVISIONS FOR WIND AND SEISMIC (SDPWS).

2. ALL LUMBER USED FOR LOAD SUPPORTING PURPOSES SHALL BE IDENTIFIED BY THE GRADE MARK OF AN APPROVED LUMBER GRADING OR INSPECTION BUREAU OR AGENCY.

3. ALL LUMBER AND PLYWOOD REQUIRED TO BE PRESERVATIVELY TREATED SHALL BEAR AN APPROVED AWPB QUALITY MARK.

4. FRAMING LUMBER MOISTURE CONTENT SHALL NOT EXCEED 19 PERCENT AT TIME OF INSTALLATION.

5. MATERIALS

   A. FRAMING LUMBER

USE-ITEM	LUMBER SPECIES	MINIMUM GRADE	GRADING AGENCY
BOTTOM PLATE	SOUTHERN YELLOW PINE	#2	SPIB
STUDS	SPRUCE PINE FIR	#2	SPIB
TOP PLATES	SOUTHERN YELLOW PINE	#2	SPIB
HEADERS	SOUTHERN YELLOW PINE	#2	SPIB
RAFTERS, JOISTS	SOUTHERN YELLOW PINE	#2	SPIB

   * ALL MEMBERS IN CONTACT WITH MASONRY OR CONCRETE SHALL BE PRESSURE TREATED.

   B. PLYWOOD

USE-ITEM	THICKNESS	EXPOSURE	APA SPAN RATING
WALL SHEATHING	7/16"	1	24/16

   C. FASTENERS

COMMON NAIL	SHANK DIAMETER	HEAD DIAMETER	LENGTH
20d	0.192"	0.406"	4"
16d	0.162"	0.344"	3.1/2"
10d	0.148"	0.312"	3"
8d	0.131"	0.281"	2.1/2"

   1. THE NUMBER AND SIZE OF NAILS CONNECTING WOOD MEMBERS SHALL BE AS SHOWN ON PLAN BUT NOT LESS THAN SPECIFIED IN THE IBC 2012 TABLE 2304.9.1.

   2. ALL NAILS EXPOSED TO MOISTURE SHALL BE HOT-DIPPED GALVANIZED.

6. VERTICAL FRAMING MEMBERS SHALL BE CONTINUOUS LENGTH WITHOUT SPLICING. SPLICES IN HORIZONTAL MEMBERS SHALL OCCUR ONLY OVER BEARING POINTS. LAP MEMBERS WHICH BEAR ON PLATES TO PROVIDE FULL BEARING FOR EACH MEMBER.

7. STRUCTURAL MEMBERS WHOSE STRENGTH IS IMPAIRED BY IMPROPER CUTTING, DRILLING, OR EXCESSIVE DEFECTS SHALL BE REPLACED OR REINFORCED IN A MANNER ACCEPTABLE TO THE ENGINEER.

8. STUDS IN WALLS LABELED AS SHEAR WALLS SHALL NOT BE BORED OR NOTCHED.

9. STUDS SHALL NOT BE NOTCHED OR BORED IN THE MIDDLE 1/3 OF SPAN.

10. STUDS IN EXTERIOR OR LOAD BEARING WALLS ARE PERMITTED TO BE CUT OR NOTCHED AT THE OUTER 1/3 OF THE SPAN TO A DEPTH NOT EXCEEDING 25% OF THE WIDTH.

11. STUDS IN EXTERIOR OR LOAD BEARING WALLS ARE PERMITTED TO BE BORED AT THE OUTER 1/3 OF THE SPAN TO A DIAMETER NOT GREATER THAN 40% OF THE ACTUAL STUD WIDTH. IN NO CASE SHALL THE EDGE OF THE BORED HOLE BE NEARER THAN 5/8 INCH TO THE EDGE OF THE STUD.

12. RAFTERS SHALL NOT BE NOTCH AT THE END SUPPORTS OR THE MIDDLE 1/3 OF THE RAFTER SPAN.

13. RAFTERS ARE PERMITTED TO BE NOTCHED IN THE TOP OR BOTTOM OF THE RAFTERS AT THE OUTER 1/3 OF THE SPAN. NOTCHES SHALL NOT EXCEED IN DEPTH 1/6 THE ACTUAL RAFTER DEPTH AND SHALL NOT EXCEED IN LENGTH 1/3 THE ACTUAL FASTER DEPTH.

14. RAFTERS ARE PERMITTED TO BE BORED TO A DIAMETER NOT GREATER THAN 1/3 THE ACTUAL RAFTER DEPTH AND NOT BE CLOSER THAN 2 INCHES FROM THE TOP OR BOTTOM EDGE OF THE RAFTER.

GREEN, RUBIANO & ASSOCIATES
CONSULTING STRUCTURAL ENGINEERS
1220 WEST HARRISON
HARLINGEN, TEXAS 78551
(956)428-4461 (956)428-0287 FAX
FIRM REGISTRATION # F-4145

COPYRIGHT 2019 BY GREEN, RUBIANO & ASSOCIATES

No.	REVISIONS	BY

GMS ARCHITECTS
1150 Paredes Line Rd.
Brownsville TX 78526
(956) 546-0110
fax (956) 546-0196

BISD Hanna ECHS
Gymnasium Facility

© Copyright 2019
Gomez Mendez Saenz Inc.
Architects-Planners
Interior Designers

Date: June 12, 2019
Scale: As Noted
Drawn By: IG, JA
Checked By: BD, JS, CG
Job No.: 192-511
Sheet: **S1.1**

GENERAL STRUCTURAL NOTES

ROUGH CARPENTRY NOTES CONTINUED:

15. NOT LESS THAN THREE (3) STUDS SHALL BE INSTALLED AT EVERY CORNER OF A LOAD–BEARING WALL.

16. ALL OPENINGS IN PERIMETER WALLS AND INTERIOR BEARING PARTITIONS LESS THAN 6'–0" IN WIDTH SHALL HAVE ONE FULL STUD ON EACH SIDE OF THE OPENING, CONTINUOUS FROM THE BOTTOM PLATE TO THE TOP PLATES, PLUS A STUD CRIPPLER UNDER THE HEADER CARRIED DOWN TO THE BOTTOM PLATE. OPENINGS 6'–0" OR LARGER SHALL HAVE TWO FULL STUDS EACH SIDE OF THE OPENING CONTINUOUS FROM THE BOTTOM PLATE TO THE TOP PLATES AND AN ADDITIONAL STUD CRIPPLER UNDER THE HEADER. FOR EVERY 2'–8" OF OPENING BEYOND 6'–0", ADD ONE ADDITIONAL CONTINUOUS STUD ON EACH END OF THE OPENING.

17. TOP PLATES FOR BEARING WALLS AND PARTITIONS SHALL CONSIST OF 2 – 2x6 OR 2x8's (AS INDICATED ON PLAN). MEMBERS SHALL BE LAPPED AT CORNERS AND INTERSECTING PARTITION. TOP PLATES FOR NON–BEARING PARTITION MAY BE SINGLE. WHEN TOP PLATE IS PARALLEL TO CEILING FRAMING, INSTALL CROSS BLOCKING NOT MORE THAN FOUR (4') FEET O.C.

18. SHEATHING SHALL BE INSTALLED CONTINUOUS OVER TWO OR MORE SPANS WITH FACE GRAIN PERPENDICULAR TO SUPPORTS AND JOINTS STAGGERED. A 1/8" SPACE SHALL BE PROVIDED AT PANEL EDGES AND END JOINTS UNLESS RECOMMENDED OTHERWISE BY THE MANUFACTURER.

19. SHEATHING SHALL BE ATTACHED TO STRUCTURE AS SPECIFIED ON SHEATHING NAILING SCHEDULES.

20. ALL METAL CONNECTORS, ANCHORS, HOLD DOWNS AND ETC., SHALL BE MANUFACTURED BY "SIMPSON STRONG TIE" OR APPROVED EQUIVALENT. ALL METAL CONNECTORS SHALL BE STAINLESS STEEL, U.N.O.

21. ENGINEER SHALL BE CONTACTED FOR FRAMING INSPECTIONS PRIOR TO INSTALLING OF CEILINGS, WALL SHEATHING, WALL FINISHES, AND/OR ROOF COVERINGS (INCLUDING BUILDING PAPER).

EXTERIOR COMPONENTS & CLADDINGS

ALL EXTERIOR COMPONENT AND CLADDING SYSTEMS (E.G. WINDOWS, CURTAIN WALLS, STOREFRONTS, DOORS, ARCHITECTURAL SIDINGS, METAL WALL AND ROOF PANELS, ROOFING SYSTEMS, SKYLIGHTS) MUST MEET MINIMUM WIND CODE REQUIREMENTS. CONTRACTOR MUST SUBMIT COMPONENT AND CLADDING ASSEMBLY WIND PRESSURE AND IMPACT RESISTANCE TESTING RATINGS AND REQUIRED ATTACHMENT PROCEDURES TO STRUCTURAL ENGINEER FOR REVIEW. ROOF TOP MECHANICAL EQUIPMENT AND THEIR SUPPORT COMPONENTS, AND ANCHORING OF THESE ITEMS TO THE STRUCTURE, SHALL BE DELEGATED DESIGN TO BE PERFORMED BY THE EQUIPMENT'S MANUFACTURER, TO MEET THE WIND PRESSURES CALCULATED PER ASCE 7–10 SECTION 29.5.1 AND ASCE 7–05 SECTION 6.5.15.1, WHICHEVER PRODUCES GREATER WIND LOADS BY USING THE WIND DESIGN PARAMETERS LISTED ON THE GENERAL STRUCTURAL NOTES DESIGN CRITERIA.

1. TESTED ASSEMBLIES

   A. THE CONTRACTOR SHALL INSTALL PROJECT SPECIFIC ASSEMBLIES THAT HAVE BEEN TESTED AND MEET THE APPLICABLE PERFORMANCE REQUIREMENTS LISTED BELOW. PROJECT ASSEMBLIES SHALL BE INSTALLED IN SAME MANNER AS TESTED ASSEMBLIES INCLUDING SYSTEM COMPONENTS, REINFORCEMENT, GLAZING, HARDWARE, ANCHORS AND FASTENING LOCATIONS, SEALANTS & ALL ACCESSORIES, AS APPLICABLE.

2. ASSEMBLY PERFORMANCE REQUIREMENTS

   A. STRUCTURAL PERFORMANCE: TESTED ASSEMBLY THAT PASSES STRUCTURAL PERFORMANCE REQUIREMENTS WHEN TESTED IN ACCORDANCE WITH THE APPLICABLE PERFORMANCE STANDARD(S) LISTED BELOW, AT A MINIMUM OF THE POSITIVE AND NEGATIVE DESIGN WIND–LOAD PRESSURES INDICATED ON THE STRUCTURAL DRAWINGS. TESTED ASSEMBLY SHALL BE NO SMALLER IN WIDTH AND LENGTH THAN ASSEMBLY INDICATED FOR USE ON THE PROJECT AND SHALL MATCH PROJECT ASSEMBLY INCLUDING ALL COMPONENTS AND SUBSTRATE(S).

   B. WINDBORNE–DEBRIS–IMPACT RESISTANCE: TESTED ASSEMBLY THAT PASSES LARGE–MISSILE IMPACT PROTECTION TESTING REQUIREMENTS ACCORDING TO ASTM E 1996 WHEN TESTED ACCORDING TO ASTM E 1886. TESTED ASSEMBLY SHALL BE NO SMALLER IN WIDTH AND LENGTH THAN ASSEMBLY INDICATED FOR USE ON THE PROJECT AND SHALL MATCH PROJECT ASSEMBLY INCLUDING ALL COMPONENTS AND SUBSTRATE(S).

3. ASSEMBLY PERFORMANCE STANDARDS

   A. ASTM E 330 – STANDARD TEST METHOD FOR STRUCTURAL PERFORMANCE OF EXTERIOR WINDOWS, DOORS, SKYLIGHTS AND CURTAIN WALLS BY UNIFORM STATIC AIR PRESSURE DIFFERENCE

   B. ASTM E 1592 – STANDARD TEST METHOD FOR STRUCTURAL PERFORMANCE OF SHEET METAL ROOF AND SIDING SYSTEMS BY UNIFORM STATIC AIR PRESSURE DIFFERENCE

   C. ASTM E 1886 – STANDARD TEST METHOD FOR PERFORMANCE OF EXTERIOR WINDOWS, CURTAIN WALLS, DOORS, AND STORM SHUTTERS IMPACTED BY MISSILE(S) AND EXPOSED TO CYCLIC PRESSURE DIFFERENTIALS

   D. ASTM E 1996 – STANDARD SPECIFICATION FOR PERFORMANCE OF EXTERIOR WINDOWS, CURTAIN WALLS, DOORS AND IMPACT PROTECTIVE SYSTEMS IMPACTED BY WINDBORNE DEBRIS IN HURRICANES

   E. FM 4450 – APPROVAL STANDARD FOR CLASS 1 INSULATED STEEL DECK ROOFS

   F. FM 4470 – APPROVAL STANDARD FOR SINGLE–PLY, POLYMER–MODIFIED BITUMEN SHEET, BUILT–UP ROOF (BUR) AND LIQUID APPLIED ROOF ASSEMBLIES FOR USE IN CLASS 1 AND NONCOMBUSTIBLE ROOF DECK CONSTRUCTION

   G. FM 4474 – AMERICAN NATIONAL STANDARD FOR EVALUATING THE SIMULATED WIND UPLIFT RESISTANCE OF ROOF ASSEMBLIES USING STATIC POSITIVE AND/OR NEGATIVE DIFFERENTIAL PRESSURES

   H. UL 580 – STANDARD FOR TESTS FOR UPLIFT RESISTANCE OF ROOF ASSEMBLIES

   I. UL 1897 – STANDARD FOR UPLIFT TESTS FOR ROOF COVERING SYSTEMS

4. ASSEMBLY SUBMITTALS

   A. SUBMITTALS SHALL CONSIST OF PROJECT SPECIFIC SHOP DRAWINGS AND ASSEMBLY TEST REPORTS, AS DESCRIBED BELOW. SUBMITTALS SHALL BE COMPLETE, CLEAR AND LEGIBLE; INCOMPLETE SUBMITTALS WILL BE REJECTED.

   B. SHOP DRAWINGS SHALL INCLUDE THE FOLLOWING ITEMS:

      1) SYSTEM DESCRIPTION INCLUDING MANUFACTURER'S NAME AND SPECIFIC PRODUCT MODEL NUMBER, NAME OR DESIGNATION.

      2) MANUFACTURER'S PRODUCT DATA/TECHNICAL INFORMATION AND DETAILS.

      3) SYSTEM LAYOUT PLANS, ELEVATIONS, CROSS–SECTIONS AND DETAILS AS APPLICABLE TO THE PROJECT.

      4) DESCRIPTION OF SYSTEM'S ASSEMBLY COMPONENTS (E.G. ROOF LAYERS, FRAME MEMBERS, REINFORCEMENT, DOOR TYPE, GLAZING, HARDWARE, ANCHORS AND FASTENING LOCATIONS, SEALANTS, ACCESSORIES). ALL COMPONENTS SHALL MATCH THOSE SPECIFIED ON ASSEMBLY TEST REPORTS.

      5) SHOP DRAWINGS SHALL INDICATE THE SYSTEM ATTACHMENT METHOD INCLUDING ANCHOR TYPE AND FASTENER LOCATIONS FOR EACH DIFFERENT TYPE OF SUBSTRATE. SYSTEM ATTACHMENT SHALL BE PER ASSEMBLY TEST REPORTS.

      6) ASSEMBLY TEST REPORTS OFTEN PROVIDE OPTIONS FOR MATERIALS AND FASTENING METHODS. SHOP DRAWINGS SHALL BE SPECIFIC TO THE MATERIAL OR METHOD THAT THE CONTRACTOR IS PROPOSING TO INSTALL ON THE PROJECT.

      7) CROSS–REFERENCING BETWEEN THE SHOP DRAWINGS AND THE ASSEMBLY TEST REPORTS IS ENCOURAGED, BUT THE SHOP DRAWINGS SHALL BE DETAILED ENOUGH TO STAND INDEPENDENT OF THE TEST REPORTS.

   C. ASSEMBLY TEST REPORTS SHALL INCLUDE THE FOLLOWING ITEMS:

      1) PERFORMANCE RATINGS BASED ON EVALUATION OF COMPREHENSIVE TESTING IN ACCORDANCE WITH THE APPLICABLE PERFORMANCE STANDARD(S) LISTED ABOVE.

      2) TESTING AND DEVELOPMENT OF REPORTS SHALL BE PERFORMED BY A QUALIFIED THIRD–PARTY TESTING AGENCY.

      3) TEST REPORTS SHALL BE SEALED BY THE QUALIFIED PROFESSIONAL ENGINEER RESPONSIBLE FOR THEIR PREPARATION.

      4) TEST REPORTS SHALL BE RECENT TO INCLUDE THE MOST CURRENT SYSTEM MANUFACTURER'S COMPONENTS AND AVAILABLE FASTENERS AND ACCESSORIES. EXPIRED TEST REPORTS SHALL BE REJECTED.

      5) TEST REPORTS SHALL BE SUBMITTED FOR EACH DIFFERENT TYPE OF ASSEMBLY ON THE PROJECT INCLUDING VARIATIONS OF SYSTEM COMPONENTS AND SUBSTRATES.

SPECIAL INSPECTIONS

SPECIAL INSPECTIONS INDEPENDENT OF THE CONTRACTOR, THE ARCHITECT, OR THE ENGINEER, SHALL BE PROVIDED BY A SPECIAL INSPECTOR EMPLOYED BY THE OWNER ACCORDING TO CHAPTER 17 OF THE IBC 2012. THE SPECIAL INSPECTOR SHALL OBSERVE THE WORK FOR CONFORMANCE WITH THE CONTRACT DOCUMENTS. THE SPECIAL INSPECTOR SHALL SEND WRITTEN REPORTS TO THE OWNER, THE ARCHITECT, THE ENGINEER AND THE CONTRACTOR. THE REPORTS SHALL INDICATE IF WORK INSPECTED WAS DONE IN CONFORMANCE WITH THE CONTRACT DOCUMENTS. ALL DISCREPANCIES SHALL BE BROUGHT TO THE IMMEDIATE ATTENTION OF THE CONTRACTOR FOR CORRECTION. IF THE DISCREPANCIES ARE NOT CORRECTED, THE SPECIAL INSPECTOR SHALL BRING THE DISCREPANCIES TO THE ATTENTION OF THE REGISTERED DESIGN PROFESSIONAL IN RESPONSIBLE CHARGE PRIOR TO THE COMPLETION OF THAT PHASE OF THE WORK. THE SPECIAL INSPECTOR SHALL SUBMIT A FINAL SIGNED REPORT STATING THAT THE SPECIAL INSPECTION WORK WAS, TO THE BEST OF THEIR KNOWLEDGE, IN OR NOT IN CONFORMANCE WITH THE DRAWINGS, SPECIFICATIONS AND APPLICABLE WORKMANSHIP PROVISIONS OF THE IBC 2012.

CONTINUOUS OR PERIODIC SPECIAL INSPECTION IS REQUIRED FOR THE FOLLOWING WORK:

REQUIRED VERIFICATION AND INSPECTION OF SOILS

VERIFICATION AND INSPECTION TASK	CONTINUOUS DURING TASK LISTED	PERIODICALLY DURING TASK LISTED
VERIFY SOILS BELOW SHALLOW FOUNDATIONS ARE SUITABLE TO ACHEIVE THE BEARING CAPACITY FOR WHICH THEY WERE DESIGNED		X
VERIFY EXCAVATIONS ARE EXTENDED TO PROPER DEPTH AND HAVE REACHED PROPER MATERIAL		X
PERFORM CLASSIFICATION AND TESTING OF COMPACTED SELECT FILL MATERIALS		X
VERIFY USE OF PROPER MATERIALS, DENSITIES AND LIFT THICKNESSES DURING PLACEMENT AND COMPACTION OF SELECT FILL	X	
PRIOR TO PLACEMENT OF COMPACTED SELECT FILL, OBSERVE SUBGRADE AND VERIFY THAT SITE HAS BEEN PREPARED PROPERLY		X

REQUIRED VERIFICATION AND INSPECTION OF PIER FOUNDATION

VERIFICATION AND INSPECTION TASK	CONTINUOUS DURING TASK LISTED	PERIODICALLY DURING TASK LISTED
OBSERVE DRILLING OPERATIONS AND MAINTAIN COMPLETE AND ACCURATE RECORDS OF EACH PIER	X	
VERIFY PLACEMENT LOCATIONS AND PLUMBNESS, CONFIRM PIER DIAMETERS, BELL DIAMETERS (IF APPLICABLE), LENGTHS, EMBEDMENT INTO BEDROCK (IF APPLICABLE) AND ADEQUATE END BEARING STRATA CAPACITY	X	
FOR CONCRETE PIERS, PERFORM ADDITIONAL INSPECTIONS AS REQUIRED FOR CONCRETE CONSTRUCTION		

REQUIRED VERIFICATION AND INSPECTION OF CONCRETE CONSTRUCTION

VERIFICATION AND INSPECTION	CONTINUOUS	PERIODIC
INSPECTION OF REINFORCING STEEL, INCLUDING PRESTRESSING TENDONS, AND PLACEMENT		X
INSPECT BOLTS TO BE INSTALLED IN CONCRETE PRIOR TO AND DURING PLACEMENT OF CONCRETE	X	
VERIFY USE OF REQUIRED DESIGN MIX		X
PERFORM SLUMP AND AIR CONTENT TEST, AND DETERMINE THE TEMPERATURE OF THE CONCRETE AT THE TIME OF SAMPLING FRESH CONCRETE FOR MAKING SPECIMENS FOR STRENGTH TESTS PER ACI 318	X	
INSPECTION OF CONCRETE AND SHOTCRETE PLACEMENT FOR PROPER APPLICATION TECHNIQUES	X	
INSPECTION FOR MAINTENANCE OF SPECIFIED CURING TEMPERATURE AND TECHNIQUES		X
INSPECTION OF PRESTRESSED CONCRETE APPLICATION OF PRESTRESSING FORCES	X	
VERIFICATION OF IN–SITU CONCRETE STRENGTH, PRIOR TO STRESSING OF TENDONS IN POST–TENSIONED CONCRETE AND PRIOR TO REMOVAL OF SHORES AND FORMS FROM BEAMS AND STRUCTURAL SLABS		X
ERECTION OF PRECAST CONCRETE MEMBERS		X
INSPECT FORMWORK FOR SHAPE, LOCATION AND DIMENSIONS OF THE CONCRETE MEMBER BEING FORMED		X

REQUIRED VERIFICATION AND INSPECTION OF ANCHORS

VERIFICATION AND INSPECTION	CONTINUOUS	PERIODIC
CAST–IN–PLACE, POST–INSTALLED, MECHANICAL AND EPOXY SET ANCHORS: AS APPLICABLE, THE INSPECTION PROGRAM SHALL VERIFY THE ANCHOR TYPE, EMBEDMENT, TIGHTENING TORQUE, DIMENSIONS, HOLE DEPTH & DIAMETER AND CLEANOUT, EPOXY MIXING AND PLACEMENT PROCEDURES IN ACCORDANCE WITH THE CONTRACT DOCUMENTS AND THE CURRENT ICC–ES EVALUATION REPORT	FREQUENCY OF INSPECTION SHALL BE IN ACCORDANCE WITH THE CURRENT ICC–ES EVALUATION REPORT, OR PER THE SPECIAL INSPECTION REQUIREMENTS OF THE ANCHOR SUBSTRATE, WHICHEVER IS MORE STRINGENT	

REQUIRED VERIFICATION AND INSPECTIONS OF OPEN–WEB STEEL JOISTS AND JOIST GIRDERS

VERIFICATION AND INSPECTION TASK	CONTINUOUS DURING TASK LISTED	PERIODICALLY DURING TASK LISTED
INSPECT THE INSTALLATION OF OPEN–WEB STEEL JOISTS AND JOIST GIRDERS		X
INSPECT WELDED OR BOLTED END CONNECTIONS		X
INSPECT HORIZONTAL OR DIAGONAL STANDARD BRIDGING AND BRIDGING THAT DIFFERS FROM SJI SPECIFICATIONS		X

REQUIRED VERIFICATION AND INSPECTION OF STEEL CONSTRUCTION

VERIFICATION AND INSPECTION	CONTINUOUS	PERIODIC
MATERIAL VERIFICATION OF HIGH–STRENGTH BOLTS, NUTS AND WASHERS		X
INSPECTION OF HIGH STRENGTH BOLTING		X
INSPECTION OF WELDING:		
COMPLETE AND PARTIAL PENETRATION GROOVE WELDS	X	
MULTIPASS FILLET WELDS	X	
SINGLE–PASS FILLET WELDS		X
FLOOR AND ROOF DECK WELDS		X
INSPECTION OF STEEL FRAME JOINT DETAILS FOR COMPLIANCE WITH APPROVED CONSTRUCTION DOCUMENTS		X

REQUIRED VERIFICATION AND INSPECTION OF COLD–FORMED LIGHTWEIGHT STEEL FRAME CONSTRUCTION (EXTERIOR METAL STUDS)

VERIFICATION AND INSPECTION TASK	CONTINUOUS DURING TASK LISTED	PERIODICALLY DURING TASK LISTED
MATERIAL VERIFICATION OF COLD–FORMED LIGHTWEIGHT FRAMING MEMBERS AND ACCESSORIES		X
TYPE, SIZE AND GAGE OF FRAMING MEMBERS AND ACCESSORIES (AS PER SHOP DRAWINGS)		X
SPACING OF FRAMING MEMBERS, BRACING, BLOCKING, AND BRIDGING (AS PER SHOP DRAWINGS)		X
INSPECTION OF WELDING; TYPE, LENGTH, SPACING (AS PER SHOP DRAWINGS)		X
INSPECTION OF FASTENER ATTACHMENT: BOLTING, ANCHORING, AND OTHER FASTENING OF COMPONENTS.		X

REQUIRED LEVEL 1 SPECIAL INSPECTION OF MASONRY CONSTRUCTION (OCCUPANCY CATEGORY I, II, III)

INSPECTION TASK	CONTINUOUS DURING TASK LISTED	PERIODICALLY DURING TASK LISTED
AS MASONRY CONSTRUCTION BEGINS, THE FOLLOWING SHALL BE VERIFIED TO ENSURE COMPLIANCE:		
PROPORTIONS OF SITE–PREPARED MORTAR		X
PLACEMENT OF MASONRY UNITS AND CONSTRUCTION OF MORTAR JOINTS		X
LOCATION OF REINFORCEMENT, CONNECTORS AND ANCHORAGES		X
THE INSPECTION PROGRAM SHALL VERIFY:		
SIZE AND LOCATION OF STRUCTURAL ELEMENTS		X
TYPE, SIZE AND LOCATION OF ANCHORS, INCLUDING OTHER DETAILS OF ANCHORAGE OF MASONRY TO STRUCTURAL MEMBERS, FRAMES OR OTHER CONSTRUCTION		X
SPECIFIED SIZE, GRADE AND TYPE OF REINFORCEMENT		X
PROTECTION OF MASONRY DURING COLD WEATHER (TEMPERATURE BELOW 40°F) OR HOT WEATHER (TEMPERATURE ABOVE 90°F)		X
PRIOR TO GROUTING, THE FOLLOWING SHALL BE VERIFIED TO ENSURE COMPLIANCE:		
GROUT SPACE IS CLEAN		X
PLACEMENT OF REINFORCEMENT, CONNECTORS AND ANCHORAGES		X
CONSTRUCTION OF MORTAR JOINTS		X
GROUT PLACEMENT SHALL BE VERIFIED TO ENSURE COMPLIANCE WITH CODE AND CONSTRUCTION DOCUMENT PROVISIONS	X	
PREPARATION OF ANY REQUIRED GROUT SPECIMENS, MORTAR SPECIMENS AND/OR PRISMS SHALL BE OBSERVED	X	
COMPLIANCE WITH REQUIRED INSPECTION PROVISIONS OF THE CONSTRUCTION DOCUMENTS AND THE APPROVED SUBITTALS SHALL BE VERIFIED		X

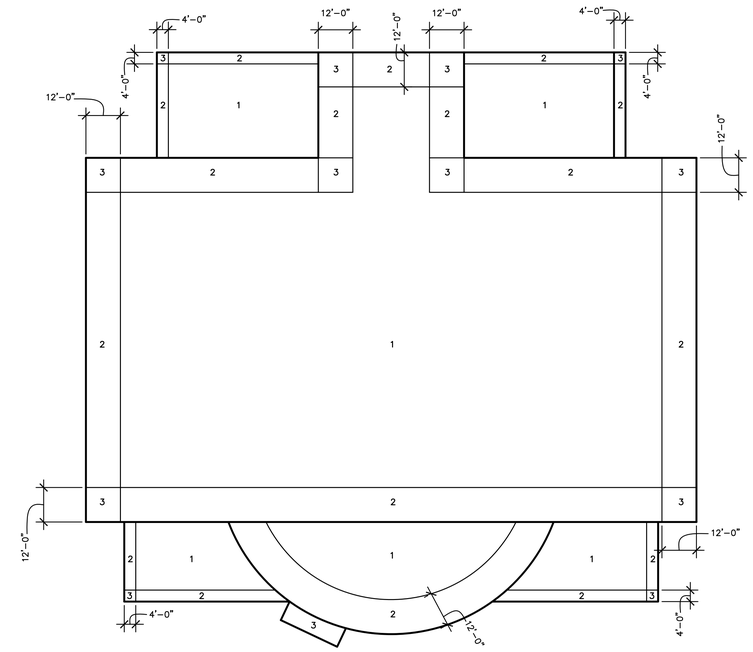

BISD HANNA ECHS GYMNASIUM FACILITY
ROOF DESIGN WIND PRESSURE (SERVICE)

DESIGN WIND PRESSURE FOR ROOF COMPONENTS & CLADDING	
ZONE	P– (UPLIFT)
1	–26 PSF
2	–44 PSF
3	–66 PSF

EXTERIOR FINISHES, DOORS & WINDOWS MAXIMUM DESIGN WIND PRESSURES
P+ = +24 PSF TOWARDS THE SURFACE
P– = –32 PSF AWAY FROM THE SURFACE

No.	REVISIONS	BY

GMS ARCHITECTS
1150 Paredes Line Rd.
Brownsville TX 78526
(956) 546-0110
fax (956) 546-0196

BISD Hanna ECHS
Gymnasium Facility

STATE OF TEXAS
HERMINIO CAVAZOS
103450
LICENSED
PROFESSIONAL ENGINEER
6/12/19

© Copyright 2019
Gomez Mendez Saenz Inc.
Architects-Planners
Interior Designers

Date:	June 12, 2019
Scale:	As Noted
Drawn By:	IG, JA
Checked By:	BD, JS, CG
Job No.	192-511
Sheet:	S1.2

GREEN, RUBIANO & ASSOCIATES
CONSULTING STRUCTURAL ENGINEERS
1230 WEST HARRISON
HARLINGEN, TEXAS 78501
(956)428-4461 (956)428-0287 FAX
FIRM REGISTRATION # F-4146

COPYRIGHT 2019 BY GREEN, RUBIANO & ASSOCIATES

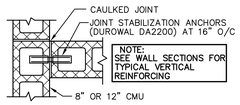

1 TYPICAL UNBONDED WALL INTERSECTION

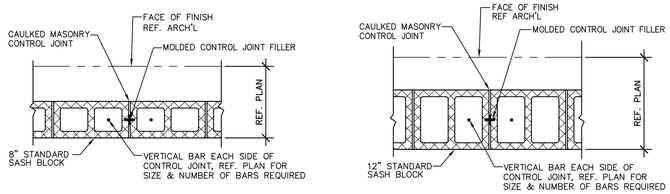

2 TYPICAL CRACK CONTROL JOINT

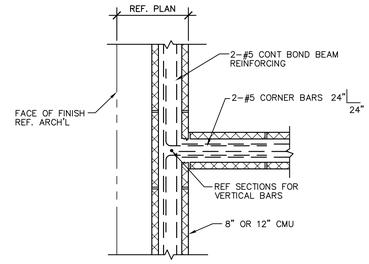

3 TYPICAL BOND BEAM AT INTERSECTING WALL

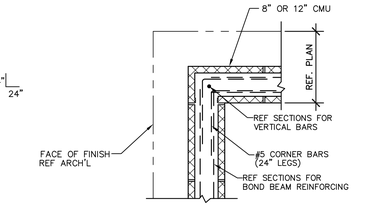

4 BOND BEAM AT EXTERIOR CORNERS

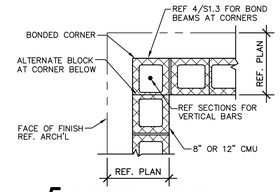

5 BONDED CORNER

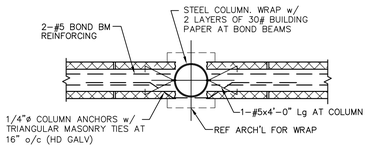

6 TYPICAL JOINT AT COLUMN IN WALL w/ WRAP

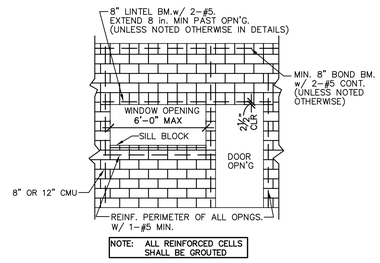

7 TYPICAL REINFORCING AT OPENINGS (U.N.O.)
(NON-LOAD-BEARING WALLS ONLY)

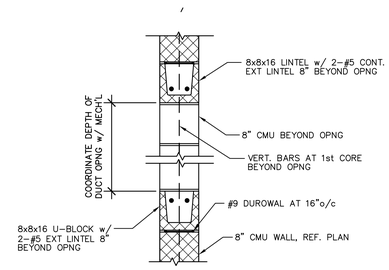

8 DUCT OPENING 4'-0" OR SMALLER THRU NON-LOAD-BEARING 8" CMU WALL

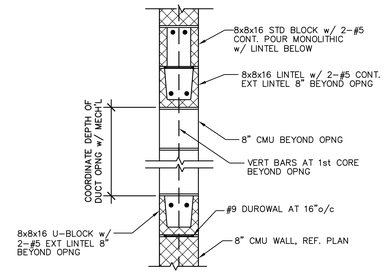

9 DUCT OPENING 4'-0" TO 8'-0" THRU NON-LOAD-BEARING 8" CMU WALL

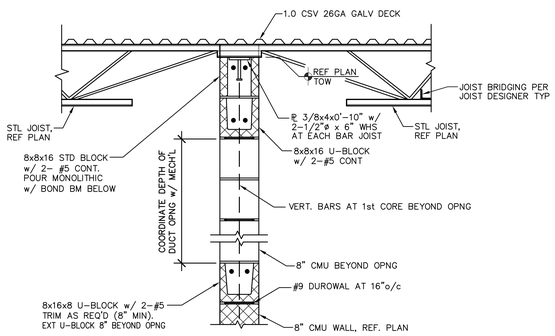

10 TYPICAL DUCT OPENING 4'-0" OR SMALLER THRU LOAD-BEARING 8" CMU WALL

NOTES:

1. COORDINATE DUCT OPENING LOCATION w/ MECHANICAL.

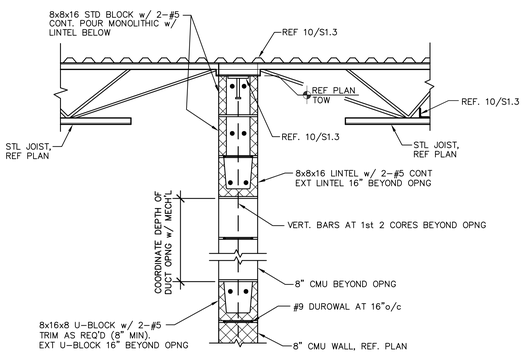

11 TYPICAL DUCT OPENING 4'-0" TO 6'-0" THRU LOAD-BEARING 8" CMU WALL

NOTES:

1. ALL DUCTS PENETRATING CORRIDOR WALLS MUST START 24" BELOW JOIST BEARING.
2. COORDINATE DUCT OPENING LOCATION w/ MECHANICAL.

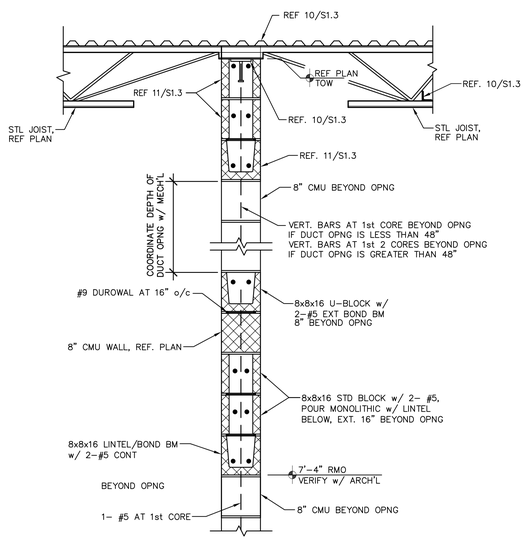

12 TYPICAL DUCT OPENING THRU LOAD BEARING 8" CMU WALL ABOVE DOOR

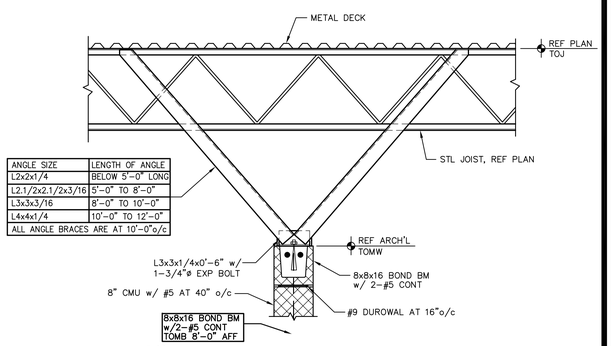

ANGLE SIZE	LENGTH OF ANGLE
L2x2x1/4	BELOW 5'-0" LONG
L2.1/2x2.1/2x3/16	5'-0" TO 8'-0"
L3x3x3/16	8'-0" TO 10'-0"
L4x4x1/4	10'-0" TO 12'-0"
ALL ANGLE BRACES ARE AT 10'-0"o/c	

13 TYPICAL CMU WALL BRACE PERPENDICULAR TO WALL

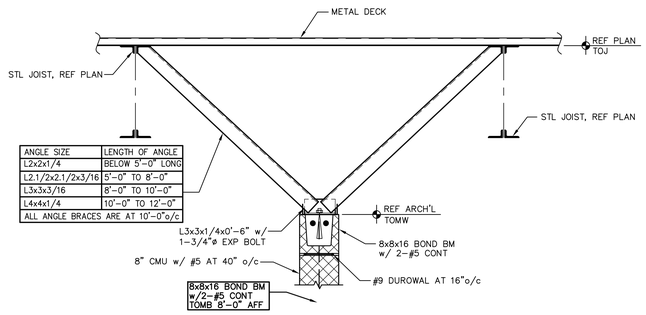

ANGLE SIZE	LENGTH OF ANGLE
L2x2x1/4	BELOW 5'-0" LONG
L2.1/2x2.1/2x3/16	5'-0" TO 8'-0"
L3x3x3/16	8'-0" TO 10'-0"
L4x4x1/4	10'-0" TO 12'-0"
ALL ANGLE BRACES ARE AT 10'-0"o/c	

14 TYPICAL CMU WALL BRACE PARALLEL TO WALL

No.	REVISIONS	BY

GMS ARCHITECTS
1150 Paredes Line Rd.
Brownsville TX 78526
(956) 546-0110
fax (956) 546-0196

BISD Hanna ECHS
Gymnasium Facility

STATE OF TEXAS
HERMBERTO CAVAZOS
103450
LICENSED
PROFESSIONAL ENGINEER
6/12/19

© Copyright 2019
Gomez Mendez Saenz Inc.
Architects-Planners
Interior Designers

Date:	June 12, 2019
Scale:	As Noted
Drawn By:	IG, JA
Checked By:	BD, JS, CG
Job No.	192-511
Sheet:	S1.3

GREEN, RUBIANO & ASSOCIATES
CONSULTING STRUCTURAL ENGINEERS
1220 WEST HARRISON
HARLINGEN, TEXAS 78551
(956)428-4461 (956)428-0287 FAX
FIRM REGISTRATION # F-4145

COPYRIGHT 2019 BY GREEN, RUBIANO & ASSOCIATES

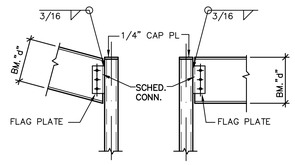

BEAM TO TUBE COLUMN CONNECTION SCHEDULE		
BEAM SIZE	PL SIZE	BOLTS
W8 & W10	PL 3/8x3.1/2x0'-6"	2-3/4"DIA.
W12 & W14	PL 3/8x3.1/2x0'-9"	3-3/4"DIA.
W16	PL 3/8x3.1/2x1'-0"	4-3/4"DIA.
W18	PL 3/8x3.1/2x1'-3"	5-3/4"DIA.
W21	PL 3/8x3.1/2x1'-6"	6-3/4"DIA.
W24	PL 3/8x3.1/2x1'-9"	7-3/4"DIA.
W27	PL 3/8x3.1/2x1'-10"	8-3/4"DIA.
W30	PL 3/8x3.1/2x2'-2"	9-3/4"DIA.

1

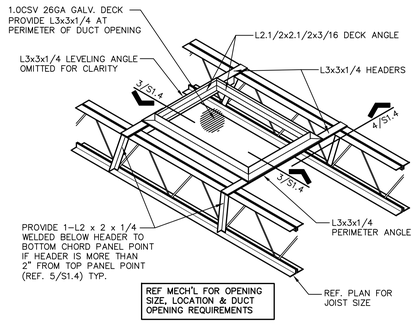

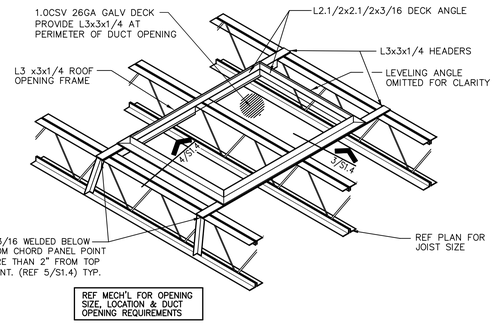

2 ROOF OPENING FRAME DETAIL

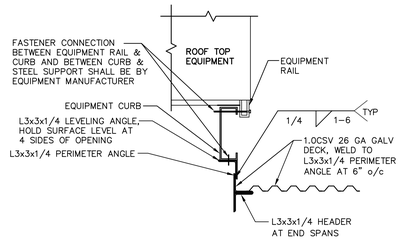

3 EQUIPMENT SUPPORT FRAME

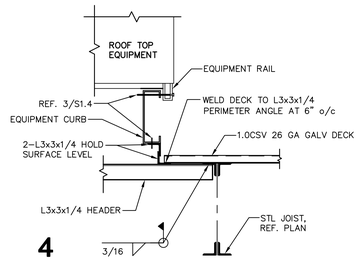

4

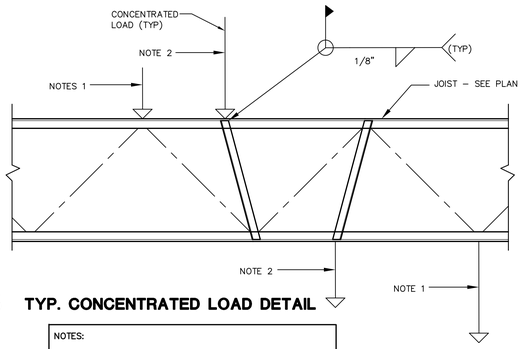

5 TYP. CONCENTRATED LOAD DETAIL

NOTES:

1. CONCENTRATED LOAD LOCATED AT JOIST PANEL POINT LOCATION - NO ADDTIONAL ANGLES REQUIRED.
2. CONCENTRATED LOAD (100 LBS. OR HEAVIER) NOT LOCATED AT JOIST PANEL POINT LOCATION - PROVIDE L2x2x3/16 TO PANEL POINT AS SHOWN.

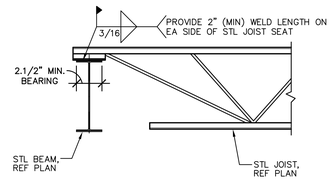

6 TYPICAL WELD LENGTH ON STL JOIST TO STL BEAM/STL PLATE CONNECTION

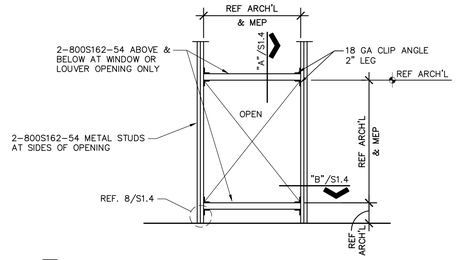

7 TYPICAL WINDOW/DOOR/LOUVER OPENING

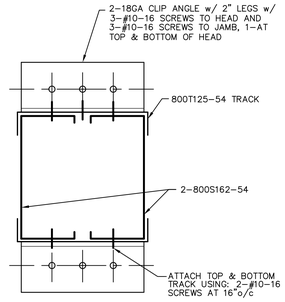

"A"

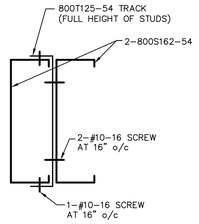

"B"

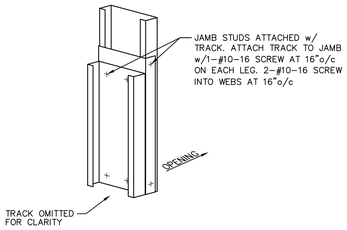

8

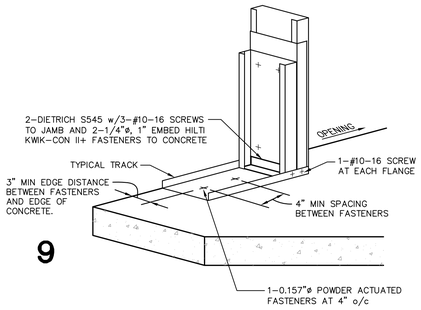

9

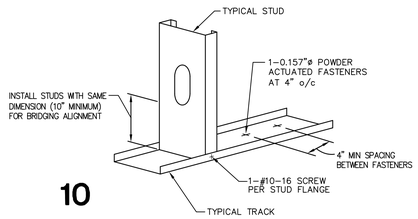

10

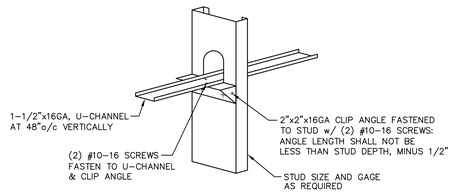

11 METAL STUD BRIDGING

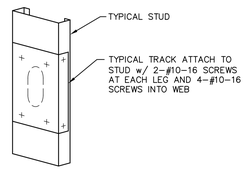

12 TYPICAL PUNCH-OUT REINFORCMENT DETAIL

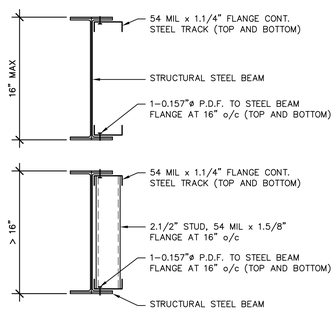

13 TYPICAL STEEL BEAM INFILL STUD DETAIL

No.	REVISIONS	BY

GMS ARCHITECTS
1150 Paredes Line Rd.
Brownsville TX 78526
(956) 546-0110
fax (956) 546-0196

BISD Hanna ECHS
Gymnasium Facility

STATE OF TEXAS
HUMBERTO CAVAZOS
103450
LICENSED
PROFESSIONAL ENGINEER
6/12/19

© Copyright 2019
Gomez Mendez Saenz Inc.
Architects-Planners
Interior Designers

Date:	June 12, 2019
Scale:	As Noted
Drawn By:	IG, JA
Checked By:	BD, JS, CG
Job No.	192-511
Sheet:	S1.4

GREEN, RUBIANO & ASSOCIATES
CONSULTING STRUCTURAL ENGINEERS
1250 NORTH HARRISON
HARLINGEN, TEXAS 78551
(956)428-4481 (956)428-4487 FAX
FIRM REGISTRATION # F-4145

COPYRIGHT 2019 BY GREEN, RUBIANO & ASSOCIATES

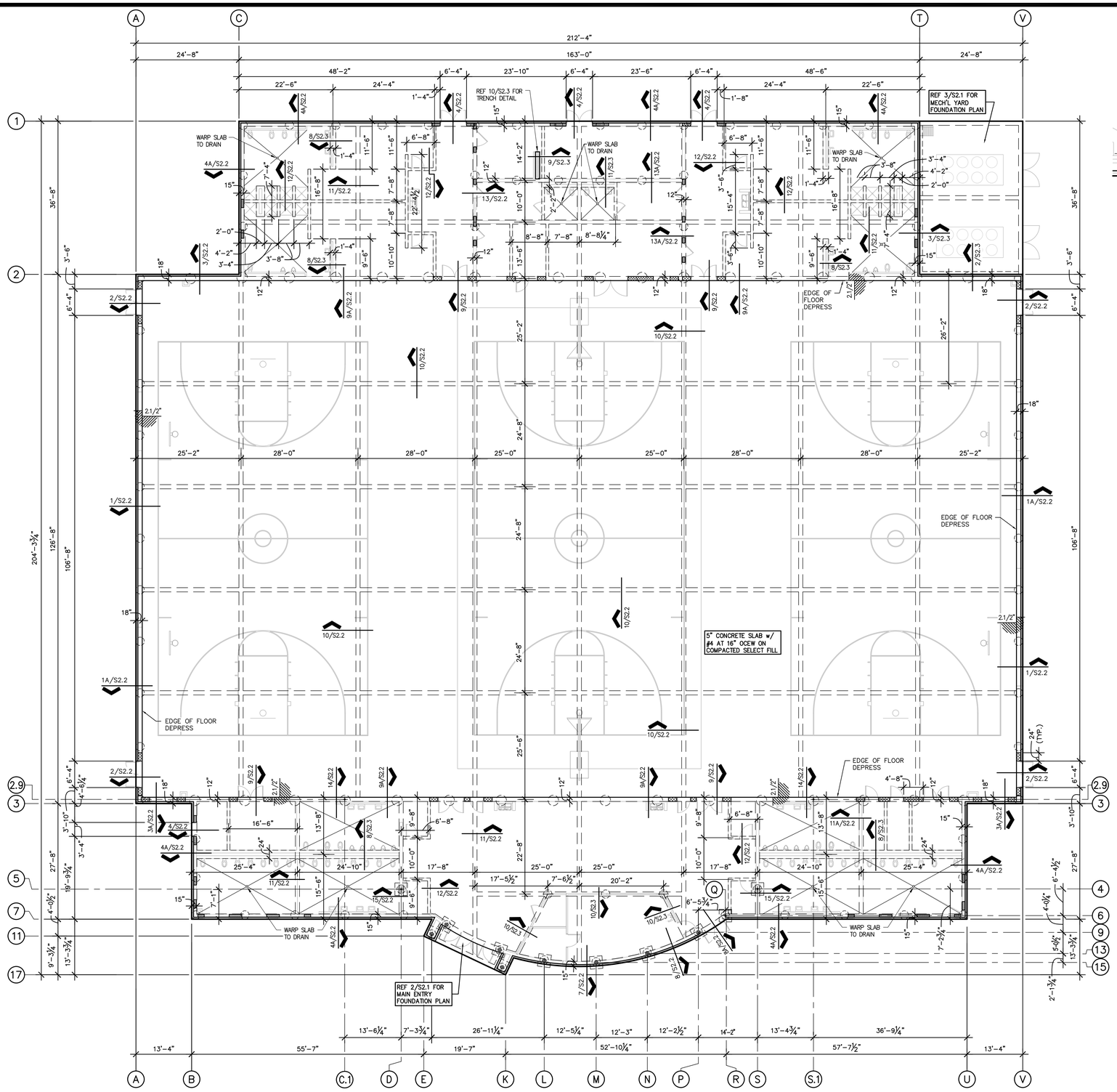

1 FOUNDATION PLAN

3/32" = 1'-0" GYMNASIUM

N
PLAN NORTH

NOTES:

1. REFERENCE ROOF FRAMING PLAN FOR COLUMN / BASEPLATE LOCATIONS. FOUNDATION PLAN DIMENSIONS GENERALLY DENOTE GRADE BEAM CENTERLINE AND OUTSIDE FACE OF CONCRETE.
2. SPLICE JOINTS FOR TOP BARS FOR REINFORCED CONCRETE GRADE BEAMS SHALL BE LOCATED AT MIDDLE THIRD OF THE SPAN OF THE BEAMS.
3. SPLICE JOINTS FOR BOTTOM BARS FOR REINFORCED CONCRETE GRADE BEAMS SHALL BE LOCATED AT SUPPORTS.
4. CONSTRUCTION JOINTS OF CONCRETE GRADE BEAMS SHALL BE LOCATED WITHIN THE MIDDLE THIRD OF THE SPAN. CONTRACTOR TO SUBMIT PROPOSED LOCATION OF CONSTRUCTION JOINTS TO ARCHITECT/ENGINEER FOR APPROVAL.
5. LAPPING OF SPLICE BARS AT SPLICE JOINTS SHALL BE 62 BAR DIAMETER OR A MINIMUM OF 36" LONG.
6. ALL CONDUIT GREATER THAN 1.1/2" IN DIAMETER (O.D.) SHALL BE RECESSED TO PROVIDE 1.1/2" CLEAR DISTANCE BETWEEN SLAB REBAR & CONDUIT.
7. MAINTAIN 2" MINIMUM CLEAR DISTANCE BETWEEN ALL CONDUIT IN SLAB.
8. A SINGLE CONDUIT (MAX 3" O.D.) MAY BE PLACED WITHIN THE BEAM CAGE. ALL CONDUIT IN BEAM CAGES TO BE TIED TO STIRRUPS MINIMUM OF 4" FROM HORIZONTAL BARS.
9. PLUMBING LINES SHALL NOT BE PLACED IN BOTTOM OF GRADE BEAM TRENCHES.
10. PLUMBING LINES PASSING THROUGH GRADE BEAMS SHALL BE SLEEVED. BEAMS SHALL BE DEEPENED AND BENT REBAR PROVIDED IF LOCATION OF DRAIN LINES REQUIRES CUTTING BOTTOM BARS. REFERENCE 1/S2.3.
11. REFERENCE PLUMBING DRAWINGS FOR EXACT LOCATION OF FLOOR DRAINS AND OTHER SLAB PENETRATIONS.
12. INDICATES 8" CMU w/ #5 VERTICAL BARS AT 8" o/c.
13. INDICATES 12" CMU w/ 2-#6 VERTICAL BARS AT 8" o/c.
14. REFERENCE 1/S2.1C FOR CONTROL JOINT PLAN.
15. REFERENCE 1/S2.1P FOR PIER PLAN.

BASEPLATE SCHEDULE

COLUMN	PLATE TxWxL	ANCHORS
HSS8x8x1/4	1" x 12" x 12"	4-3/4" DIA x 8" WHS
4" DIA XS PIPE	3/4" x 9" x 9"	4-3/4" DIA x 8" WHS
5" DIA XS PIPE	1" x 10" x 10"	4-3/4" DIA x 8" WHS

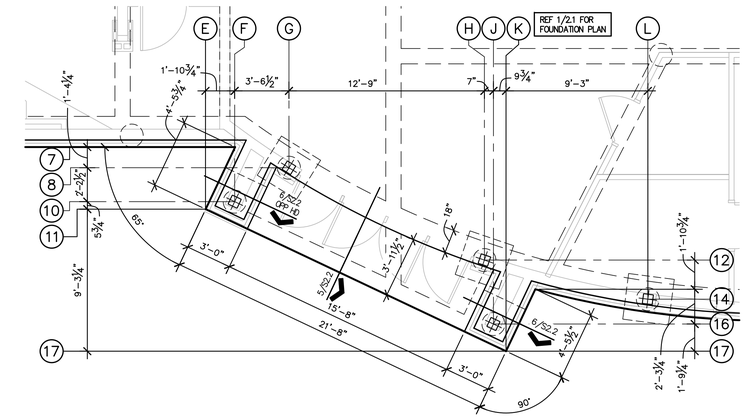

2 MAIN ENTRY FOUNDATION PLAN

1/4" = 1'-0" GYMNASIUM

NOTES:

1. REFERENCE 1/S2.1 FOR FOUNDATION PLAN AND NOTES.

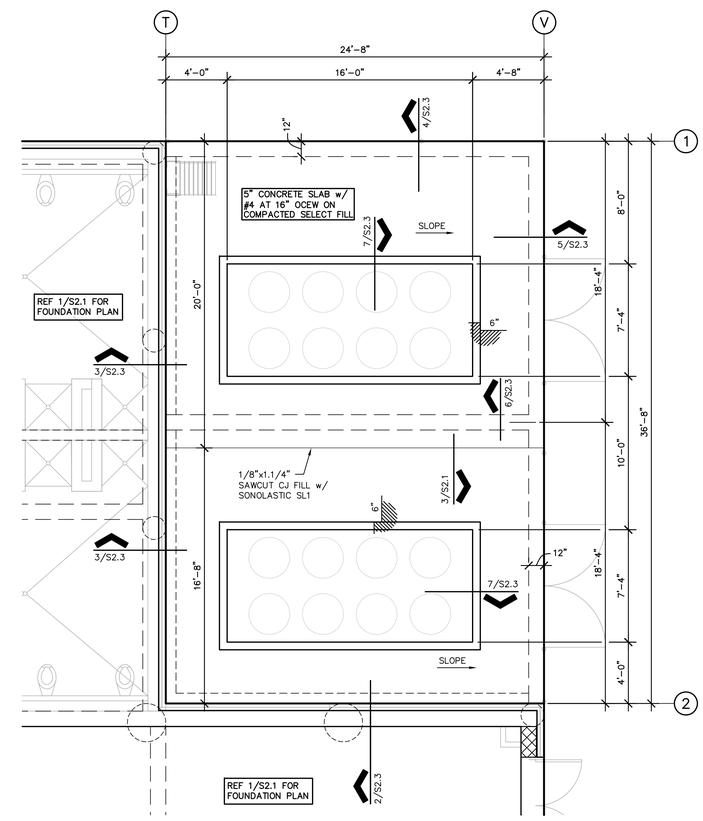

3 MECHANICAL YARD FOUNDATION PLAN

1/4" = 1'-0"

NOTES:

1. REFERENCE 1/S2.1 FOR FOUNDATION PLAN AND NOTES.

No.	REVISIONS	BY

GMS ARCHITECTS
1150 Paredes Line Rd.
Brownsville TX 78526
(956) 546-0110
fax (956) 546-0196

BISD Hanna ECHS
Gymnasium Facility

STATE OF TEXAS
HERMINIO CAMAZOS
103450
6/12/19

© Copyright 2019
Gomez Mendez Saenz Inc.
Architects-Planners
Interior Designers

Date:	June 12, 2019
Scale:	As Noted
Drawn By:	IG, JA
Checked By:	BD, JS, CG
Job No.	192-511
Sheet:	S2.1

GREEN, RUBIANO & ASSOCIATES
CONSULTING STRUCTURAL ENGINEERS
1220 WEST HARRISON
HARLINGEN, TEXAS 78551
(956)428-4481 (956)428-0287 FAX
FIRM REGISTRATION # F-4146

COPYRIGHT 2019 BY GREEN, RUBIANO & ASSOCIATES

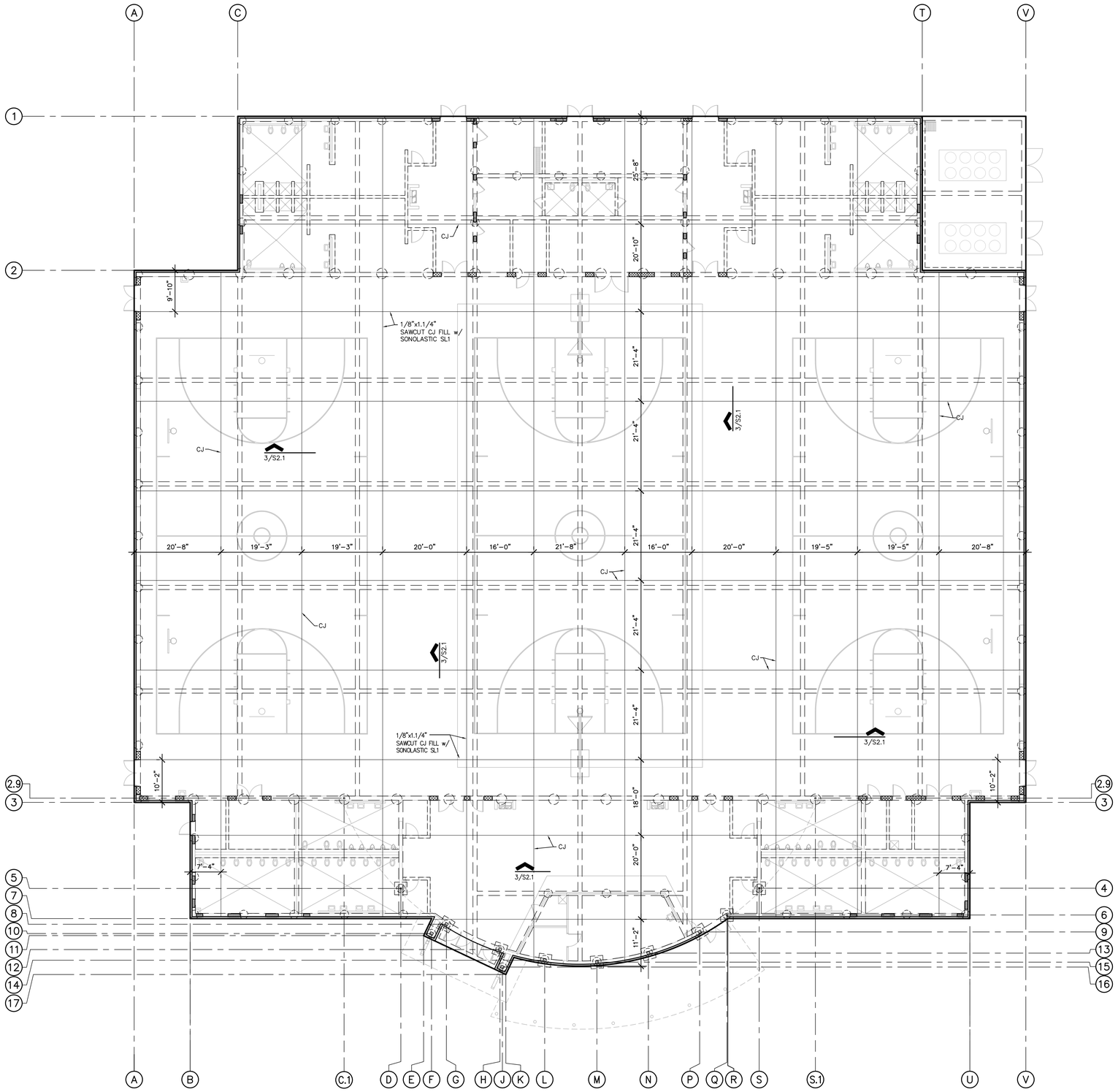

1 CONTROL JOINT PLAN

3/32" = 1'-0" GYMNASIUM

N

PLAN NORTH

NOTES:

1. CRACK CONTROL JOINTS ARE NOTED ON THE PLANS. CONTRACTOR TO COORDINATE CHANGES WITH THE ENGINEER PRIOR TO FORMING FOUNDATION.
2. ALL JOINTS TO BE CLEANED AND FILLED w/ SONOLASTIC SL1 (SONNEBORN). REFERENCE 2/S2.1C.
3. REFERENCE 1/S2.1 FOR ADDITIONAL FOUNDATION NOTES AND REFERENCES.

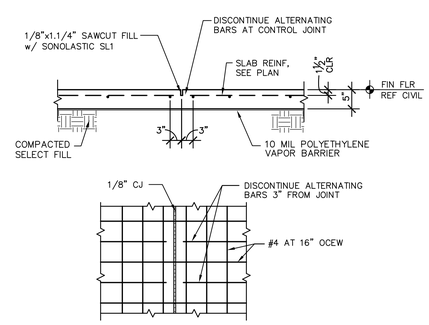

2 CONTROL JOINT

NOTE: ALL JOINTS ARE TO BE CLEANED AND FILLED WITH SONOLASTIC SL1 (SONNEBORN).

No.	REVISIONS	BY

GMS ARCHITECTS
1150 Paredes Line Rd.
Brownsville TX 78526
(956) 546-0110
fax (956) 546-0196

BISD Hanna ECHS
Gymnasium Facility

STATE OF TEXAS
HERIBERTO CANAZOS
103450
LICENSED PROFESSIONAL ENGINEER
6/12/19

© Copyright 2019
Gomez Mendez Saenz Inc.
Architects-Planners
Interior Designers

Date:	June 12, 2019
Scale:	As Noted
Drawn By:	IG, JA
Checked By:	BD, JS, CG
Job No.	192-511
Sheet:	S2.1C

GREEN, RUBIANO & ASSOCIATES
CONSULTING STRUCTURAL ENGINEERS
1220 WEST HARRISON
HARLINGEN, TEXAS 78501
(956)428-4481 (956)428-0287 FAX
FIRM REGISTRATION # F-4146

COPYRIGHT 2019 BY GREEN, RUBIANO & ASSOCIATES

RText (RText)

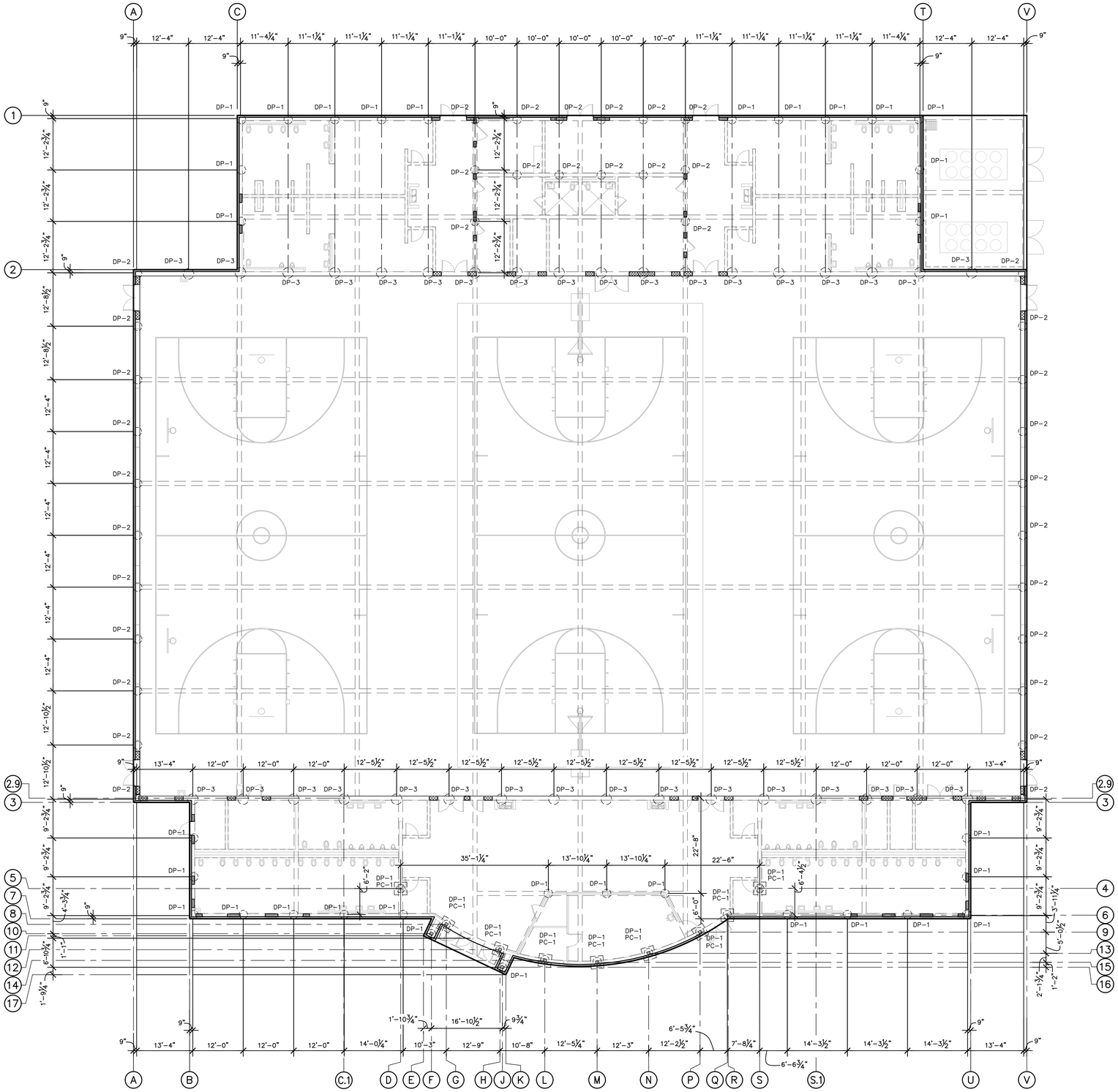

1 DRILLED PIER PLAN

3/32" = 1'-0" GYMNASIUM

N

PLAN NORTH

NOTES:

1. REFERENCE 1/S2.1 FOR FOUNDATION PLAN.
2. REFERENCE 1/S2.1C FOR CONTROL JOINT PLAN.
3. REFERENCE 2/S2.1P FOR DRILLED PIER SCHEDULE

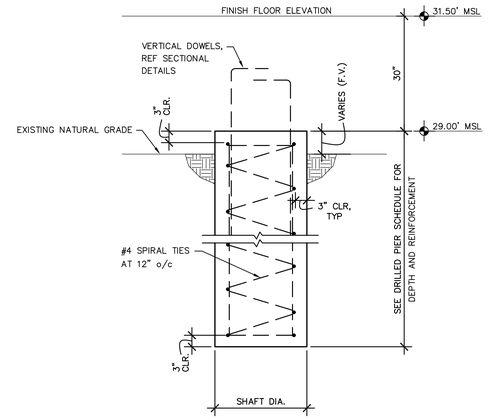

2 DRILLED PIER PROFILE

3/4"=1'-0"

DRILLED PIER SCHEDULE				
MARK	SHAFT DIA. FEET	VERTICAL REINFORCING	DEPTH (FEET)	BEARING DEPTH BELOW MEAN SEA LEVEL (FEET MSL)
DP-1	1'-6"	8-#6	35'-0"	-6.00'
DP-2	1'-6"	8-#6	45'-0"	-16.00'
DP-3	2'-6"	10-#8	45'-0"	-16.00'

PIER CAP SCHEDULE		
MARK	SIZE	REINFORCING
PC-1	3'-0"x3'-0"	#5 AT 12" OCEW

No.	REVISIONS	BY

GMS ARCHITECTS
1150 Paredes Line Rd.
Brownsville TX 78526
(956) 546-0110
fax (956) 546-0196

BISD Hanna ECHS
Gymnasium Facility

STATE OF TEXAS
HERMBERTO CAVAZOS
103450
LICENSED PROFESSIONAL ENGINEER
6/12/19

© Copyright 2019
Gomez Mendez Saenz Inc.
Architects-Planners
Interior Designers

Date:	June 12, 2019
Scale:	As Noted
Drawn By:	IG, JA
Checked By:	BD, JS, CG
Job No.	192-511
Sheet:	S2.1P

GREEN, RUBIANO & ASSOCIATES
CONSULTING STRUCTURAL ENGINEERS
1250 WEST HARRISON
HARLINGEN, TEXAS 78551
(956)428-4481 (956)428-0287 FAX
FIRM REGISTRATION # F-4146

COPYRIGHT 2019 BY GREEN, RUBIANO & ASSOCIATES

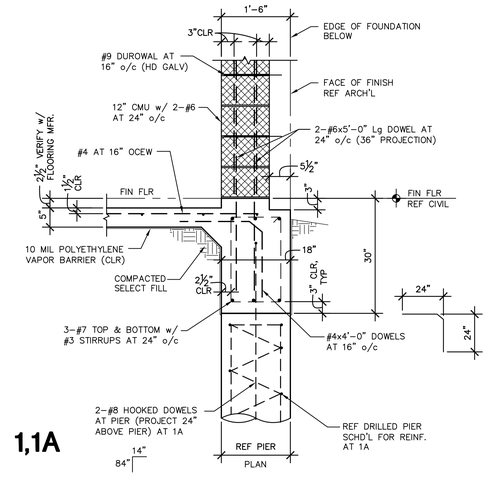

1,1A

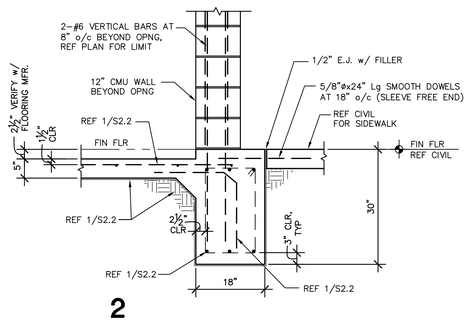

2

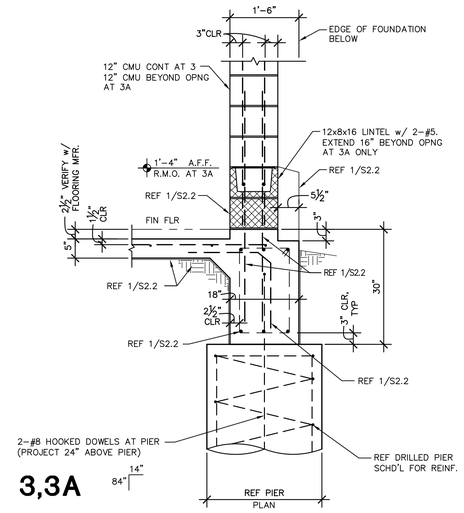

3,3A

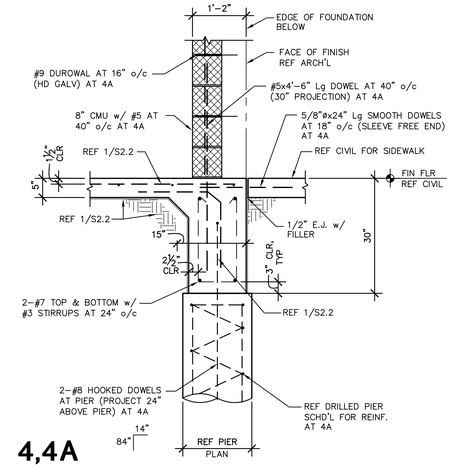

4,4A

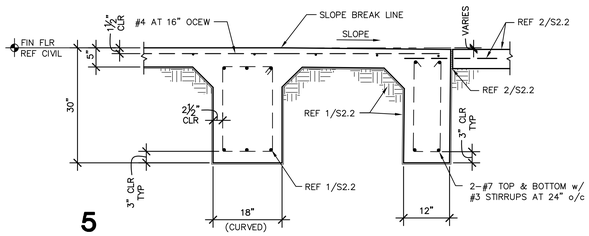

5

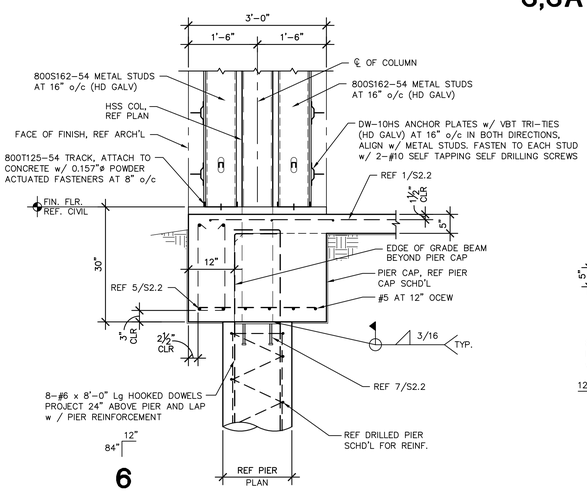

6

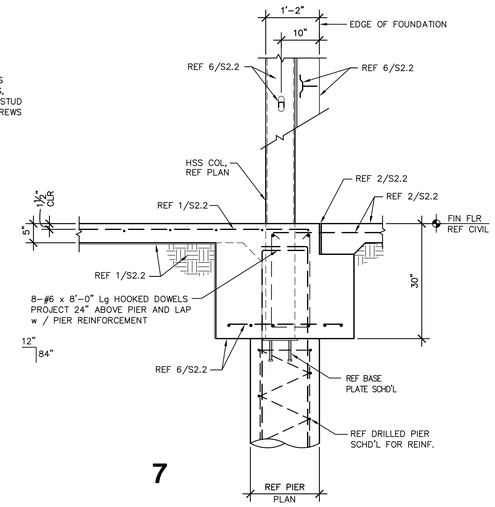

7

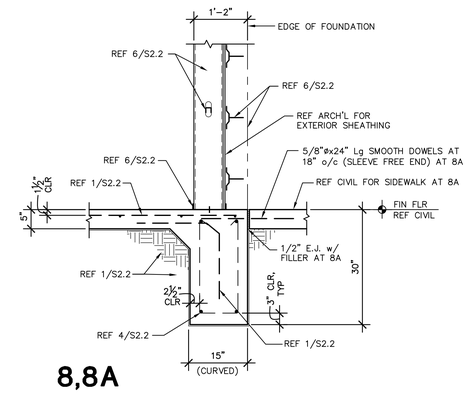

8,8A

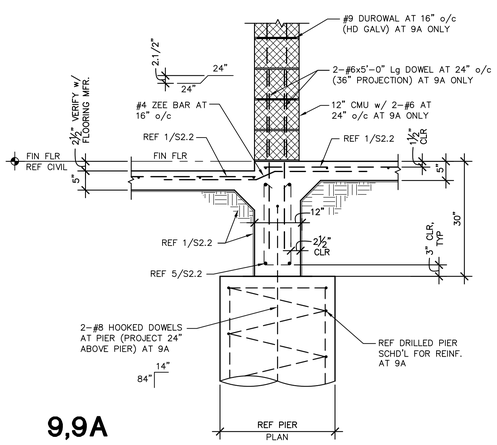

9,9A

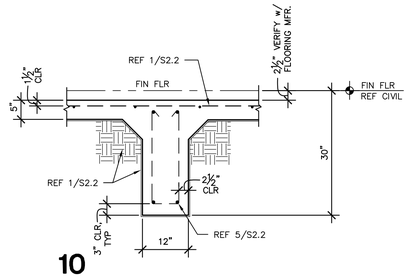

10

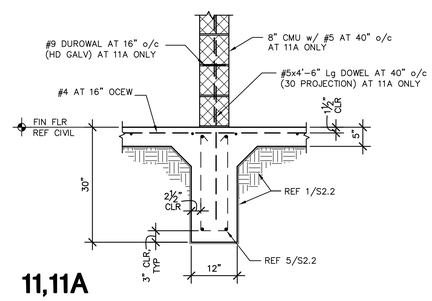

11,11A

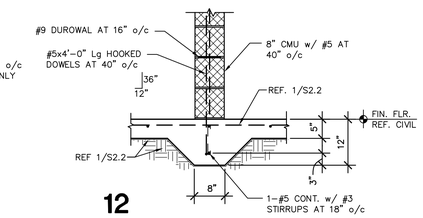

12

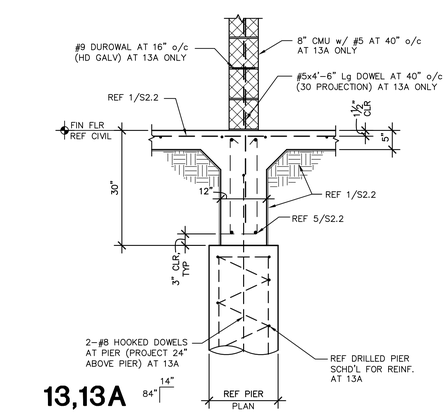

13,13A

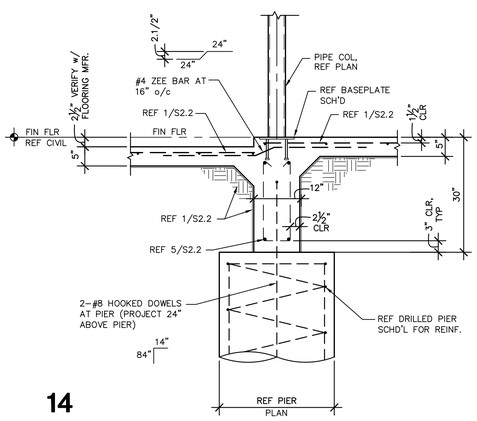

14

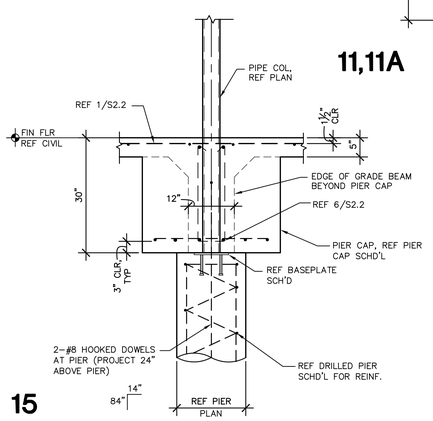

15

No.	REVISIONS	BY

GMS ARCHITECTS
1150 Paredes Line Rd.
Brownsville TX 78526
(956) 546-0110
fax (956) 546-0196

BISD Hanna ECHS
Gymnasium Facility

STATE OF TEXAS
HUMBERTO CAVAZOS
103450
LICENSED
PROFESSIONAL ENGINEER
6/12/19

© Copyright 2019
Gomez Mendez Saenz Inc.
Architects-Planners
Interior Designers

Date:	June 12, 2019
Scale:	As Noted
Drawn By:	IG, JA
Checked By:	BD, JS, CG
Job No.	192-511
Sheet:	S2.2

GREEN, RUBIANO & ASSOCIATES
CONSULTING STRUCTURAL ENGINEERS
1220 WEST HARRISON
HARLINGEN, TEXAS 78551
(956)428-4461 (956)428-0267 FAX
FIRM REGISTRATION # F-4145

COPYRIGHT 2019 BY GREEN, RUBIANO & ASSOCIATES

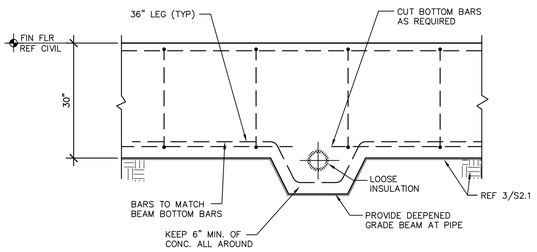

1 TOP OF SLEEVE INTERRUPTS REINFORCING

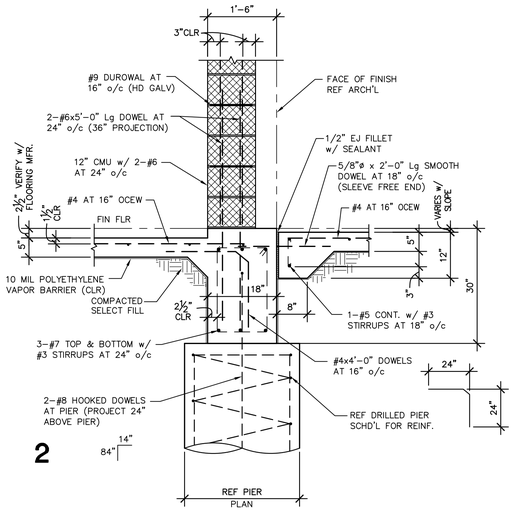

2

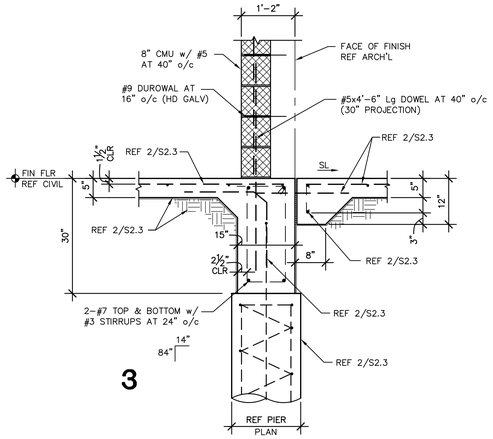

3

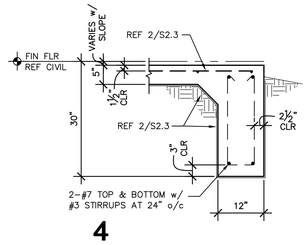

4

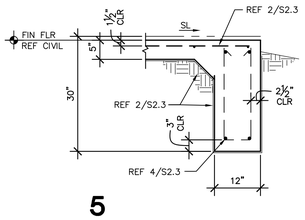

5

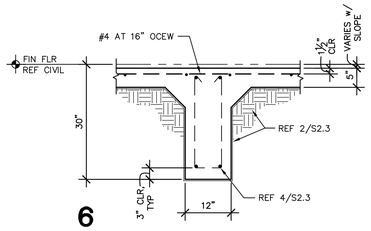

6

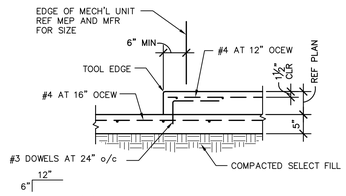

7 HOUSEKEEPING PAD

NOTE:
1. COORDINATE SIZE, LOCATION AND QUANTITIES OF HOUSEKEEPING PADS WITH MEP.

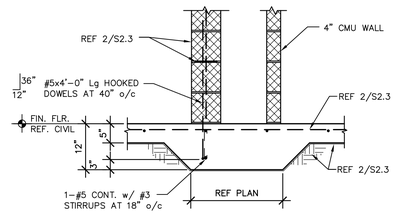

8

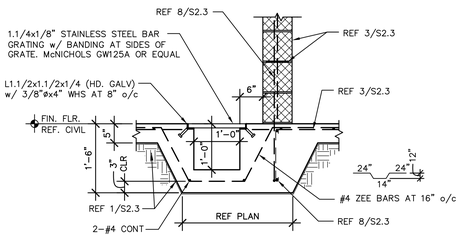

9 TRENCH DETAIL

VERIFY SIZE & LOCATION OF TRENCH WITH PLUMBING PRIOR TO POURING

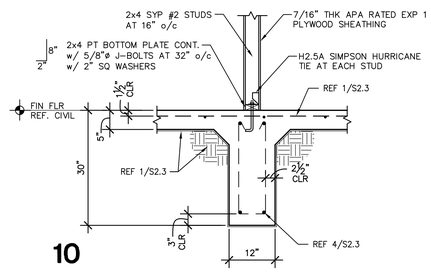

10

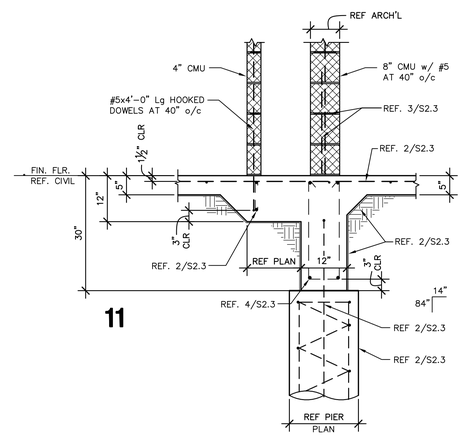

11

No.	REVISIONS	BY

GMS ARCHITECTS
1150 Paredes Line Rd.
Brownsville TX 78526
(956) 546-0110
fax (956) 546-0196

BISD Hanna ECHS
Gymnasium Facility

STATE OF TEXAS
HERMINIO CAVAZOS
103459
LICENSED
PROFESSIONAL ENGINEER
6/12/19

© Copyright 2019
Gomez Mendez Saenz Inc.
Architects-Planners
Interior Designers

Date:	June 12, 2019
Scale:	As Noted
Drawn By:	IG, JA
Checked By:	BD, JS, CG
Job No.	192-511
Sheet:	S2.3

GREEN, RUBIANO & ASSOCIATES
CONSULTING STRUCTURAL ENGINEERS
1320 WEST HARRISON
HARLINGEN, TEXAS 78551
(956)428-4481 (956)428-0287 FAX
FIRM REGISTRATION # F-4145

COPYRIGHT 2019 BY GREEN, RUBIANO & ASSOCIATES

RText (RText)

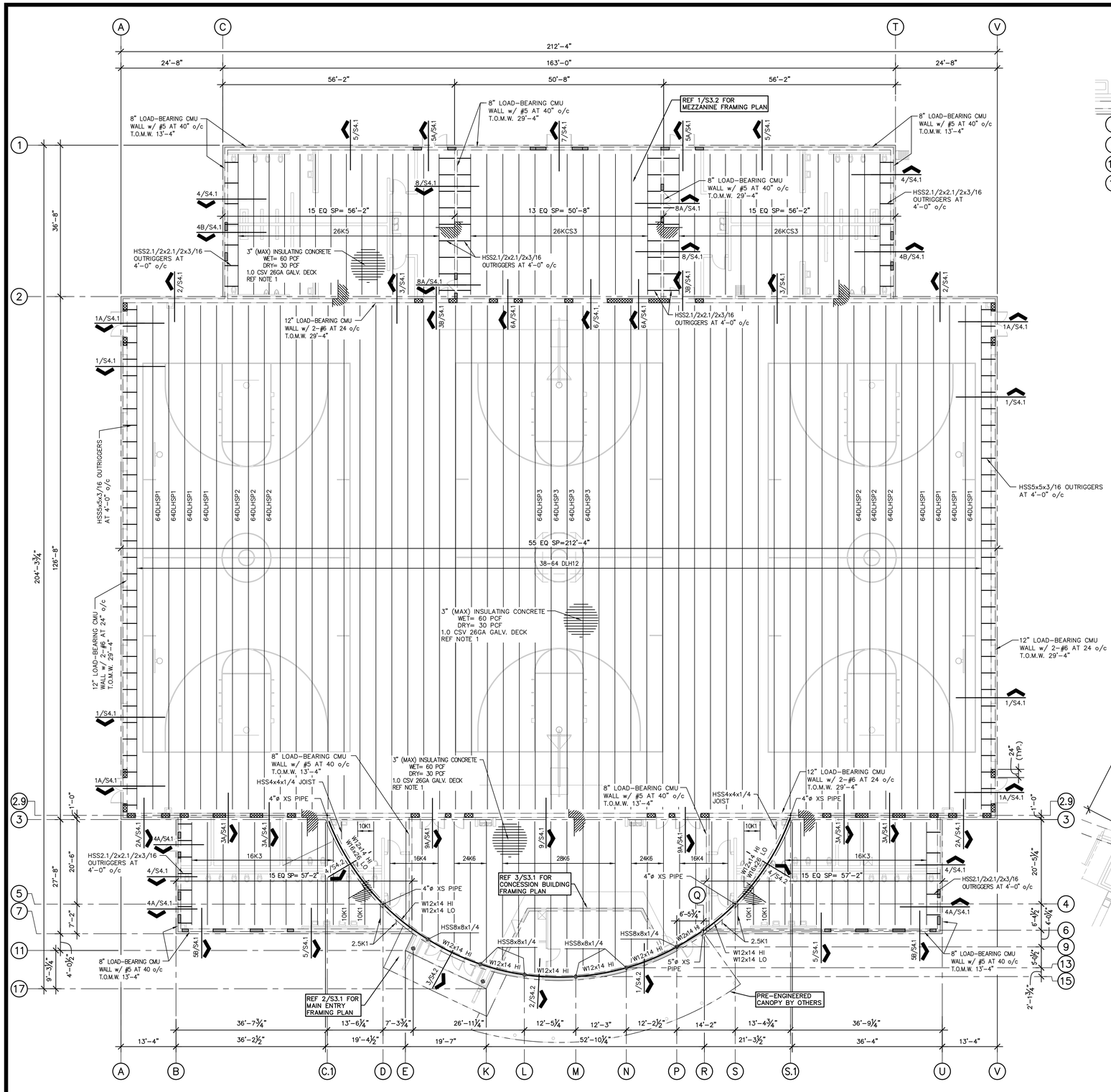

1 ROOF FRAMING PLAN

3/32" = 1'-0" GYMNASIUM

N PLAN NORTH

NOTES:

1. ROOF DECK SHALL BE 1.0CSV 26GA GALV DECK BY VULCRAFT OR APPROVED EQUAL. (I=0.042 IN^4/FT; Sp=0.067 IN^3/FT; Sn=0.071 IN^3/FT; Fy=60KS1). ATTACH DECK TO SUPPORTS USING 5/8" PUDDLE WELDS ON A 33/4 PATTERN AND 2-#10 TEK SCREW SIDE LAP FASTENERS.
2. INDICATES 8" CMU w/ #5 VERTICAL BARS AT 8" o/c.
3. INDICATES 12" CMU w/ 2-#6 VERTICAL BARS AT 8" o/c.
4. REFERENCE 4/S3.3 FOR SPECIAL JOIST PROFILES.
5. PROVIDE A BRACE ON TOP OF ALL CMU WALLS LONGER THAN 10'-0" BETWEEN INTERSECTING CMU WALLS. REFERENCE DETAILS ON SHEET S1.3.
6. REFERENCE DETAILS ON S1.3 FOR TYPICAL DUCT OPENINGS THROUGH CMU WALLS.
7. MECHANICAL OPENINGS IN CMU MUST BE COORDINATED WITH STRUCTURAL ENGINEER.

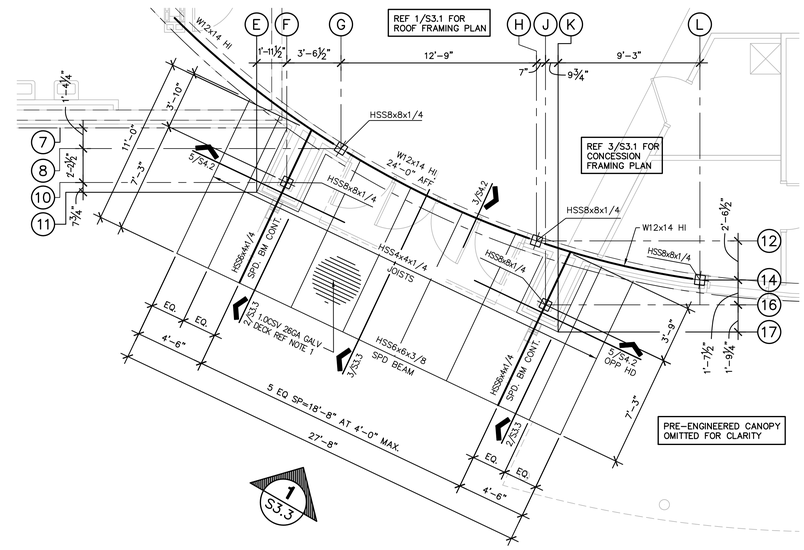

2 MAIN ENTRY FRAMING PLAN

1/4" = 1'-0" FOYER

N PLAN NORTH

NOTES:

1. ROOF DECK SHALL BE 1.0CSV 26GA GALV DECK BY VULCRAFT OR APPROVED EQUAL. (I=0.042 IN^4/FT; Sp=0.067 IN^3/FT; Sn=0.071 IN^3/FT; Fy=60KS1). ATTACH DECK TO SUPPORTS USING 5/8" PUDDLE WELDS ON A 33/4 PATTERN AND 2-#10 TEK SCREW SIDE LAP FASTENERS.
2. REFERENCE 1/S3.1 FOR ROOF FRAMING PLAN.
3. REFERENCE 1/S3.3 FOR FRONT FRAME ELEVATION.

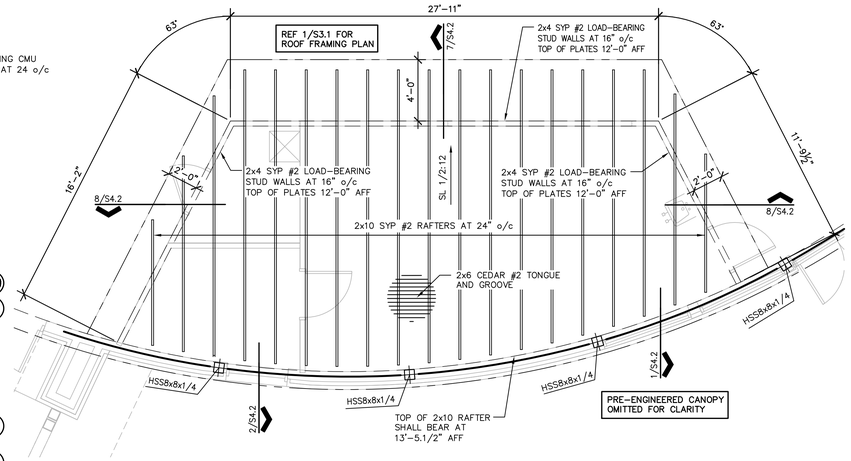

3 ROOF FRAMING PLAN

1/4" = 1'-0" CONCESSION BUILDING

N PLAN NORTH

NOTES:

1. ROOF DECK SHALL BE 2x6 CEDAR #2 TONGUE & GROOVE DECKING.
2. REFERENCE TONGUE & GROOVE DECKING NAILING SCHEDULE FOR PROPER DECKING ATTACHMENT.
3. TOP OF RAFTERS SHALL BE 13'-5.1/2 A.F.F. UNLESS NOTED OTHERWISE.

TONGUE & GROOVE DECKING NAILING SCHEDULE
8d NAILS AT EACH SUPPORT AND AT 12" o/c ALONG EDGE OF TONGUE AND GROOVE DECKING

ALL 8d NAILS TO MEET MINIMUM LENGTH/DIAMETER BELOW.
LENGTH – 2.1/2"
DIAMETER – 0.131"

No.	REVISIONS	BY

GMS ARCHITECTS
1150 Paredes Line Rd.
Brownsville TX 78526
(956) 546-0110
fax (956) 546-0196

BISD Hanna ECHS
Gymnasium Facility

STATE OF TEXAS
HERMINIO CANIZOS
103450
LICENSED PROFESSIONAL ENGINEER
6/12/19

© Copyright 2019
Gomez Mendez Saenz Inc.
Architects-Planners
Interior Designers

Date:	June 12, 2019
Scale:	As Noted
Drawn By:	IG, JA
Checked By:	BD, JS, CG
Job No.	192-511
Sheet:	S3.1

GREEN, RUBIANO & ASSOCIATES
CONSULTING STRUCTURAL ENGINEERS
1220 WEST HARRISON
HARLINGEN, TEXAS 78551
(956)428-4481 (956)428-0287 FAX
FIRM REGISTRATION # F-4146

COPYRIGHT 2019 BY GREEN, RUBIANO & ASSOCIATES

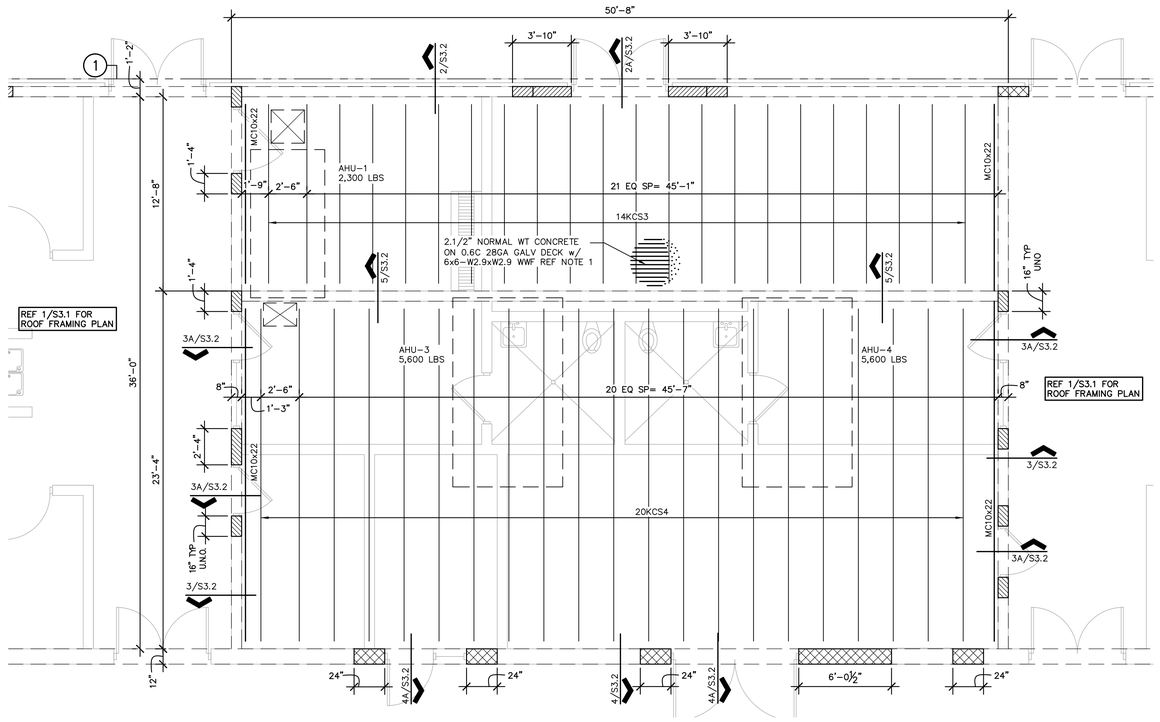

1 MEZZANINE FRAMING PLAN

1/4" = 1'-0"

N
PLAN NORTH

NOTES:

1. DECK SHALL BE 0.6C 28GA GALVANIZED DECK BY VULCRAFT OR APPROVED EQUAL. (Ip=0.012 IN^2/FT; Sp=0.035 IN^3/FT; Sn=0.036 IN^3/FT; Fy = 60 KSI). ATTACH DECK TO SUPPORTS USING 5/8" PUDDLE WELDS ON A 30/4 PATTERN, WELDING WASHERS REQUIRED.
2. REFERENCE DETAIL 6/S3.2 FOR PENETRATIONS THRU MEZZANINE FLOOR FRAMING. CONTRACTOR SHOULD CONTACT ENGINEER PRIOR TO INSTALLATION OF EQUIPMENT IF THERE IS A CONFLICT BETWEEN PENETRATIONS AND FRAMING.
3. PRIOR TO INSTALLATION OF MECHANICAL EQUIPMENT, NOTIFY ENGINEER IF EQUIPMENT IS HEAVIER THAN WEIGHTS SHOWN ON MEP PLAN TO ALLOW FOR VERIFICATION OF STRUCTURAL CAPACITY OF FRAMING MEMBERS.
4. REF. 8/S3.2 FOR TYPICAL MECHANICAL EQUIPMENT SUPPORT DETAIL.
5. INDICATES 8" CMU w/ 1-#5 VERTICAL BAR AT 8" o/c.
6. INDICATES 12" CMU w/ 2-#6 VERTICAL BAR AT 8" o/c.
7. REFERENCE 1/S3.1 FOR ROOF FRAMING PLAN.

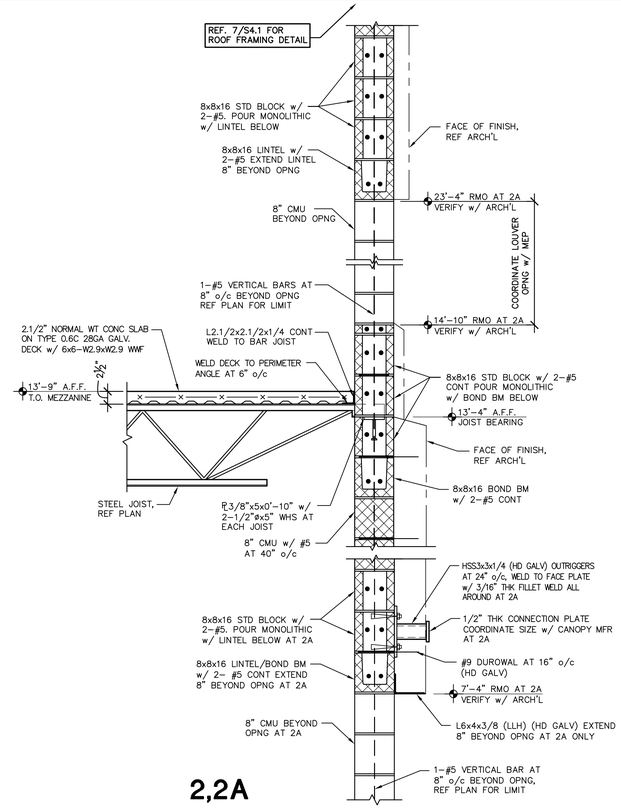

2,2A

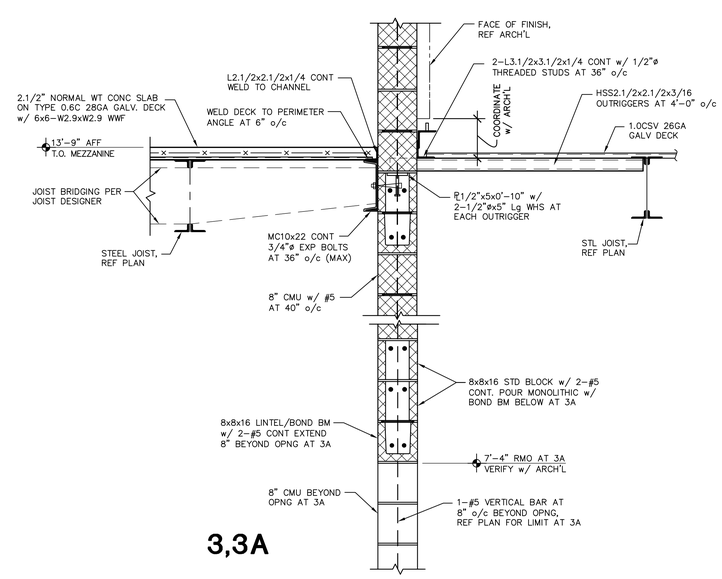

3,3A

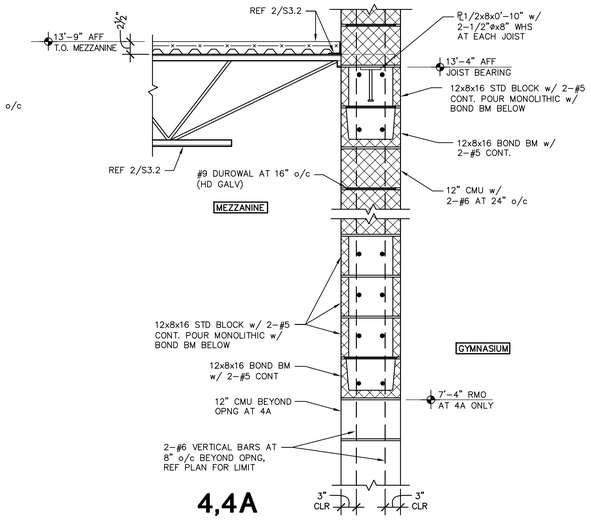

4,4A

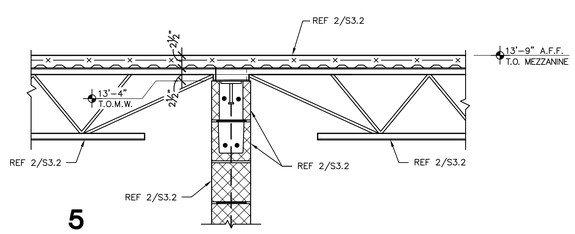

5

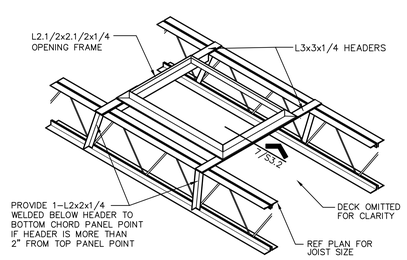

6 FLOOR OPENING FRAME DETAIL

REF ARCH'L & MECH'L FOR
OPENING SIZE & LOCATION

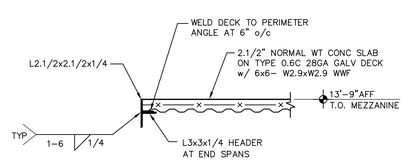

7 OPENING SUPPORT FRAME

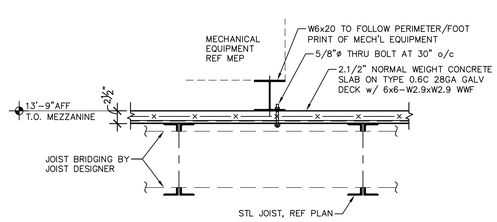

8 TYPICAL MECHANICAL EQUIPMENT SUPPORT

NOTE:
REFERENCE MEP FOR REQUIRED
LOCATION OF SUPPORT

GREEN, RUBIANO & ASSOCIATES
CONSULTING STRUCTURAL ENGINEERS
1220 WEST HARRISON
HARLINGEN, TEXAS 78551
(956)425-5481 (956)425-0897 FAX
FIRM REGISTRATION # F-4148

COPYRIGHT 2019 BY GREEN, RUBIANO & ASSOCIATES

No.	REVISIONS	BY

GMS ARCHITECTS
1150 Paredes Line Rd.
Brownsville TX 78526
(956) 546-0110
fax (956) 546-0196

BISD Hanna ECHS
Gymnasium Facility

HERIBERTO CAVAZOS
103450
Licensed
6/12/19

© Copyright 2019
Gomez Mendez Saenz Inc.
Architects-Planners
Interior Designers

Date:	June 12, 2019
Scale:	As Noted
Drawn By:	IG, JA
Checked By:	BD, JS, CG
Job No.	192-511
Sheet:	S3.2

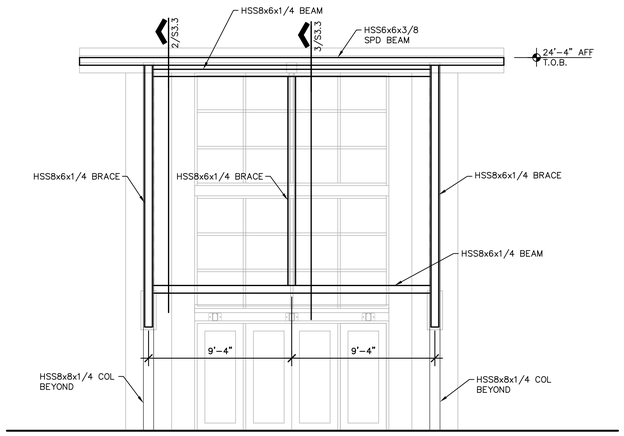

1 FRONT FRAME ELEVATION

1/4" = 1'-0"

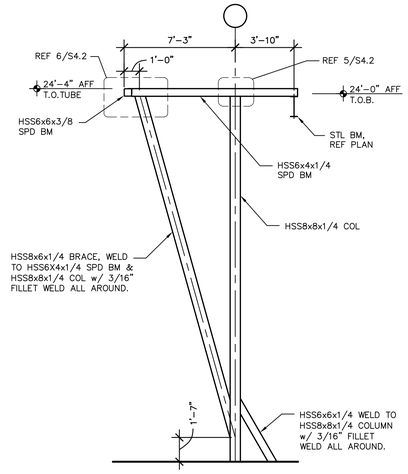

2

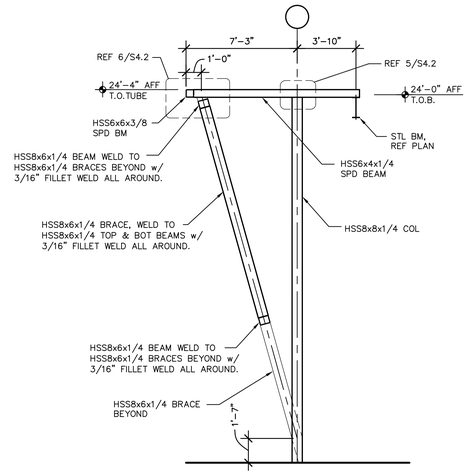

3

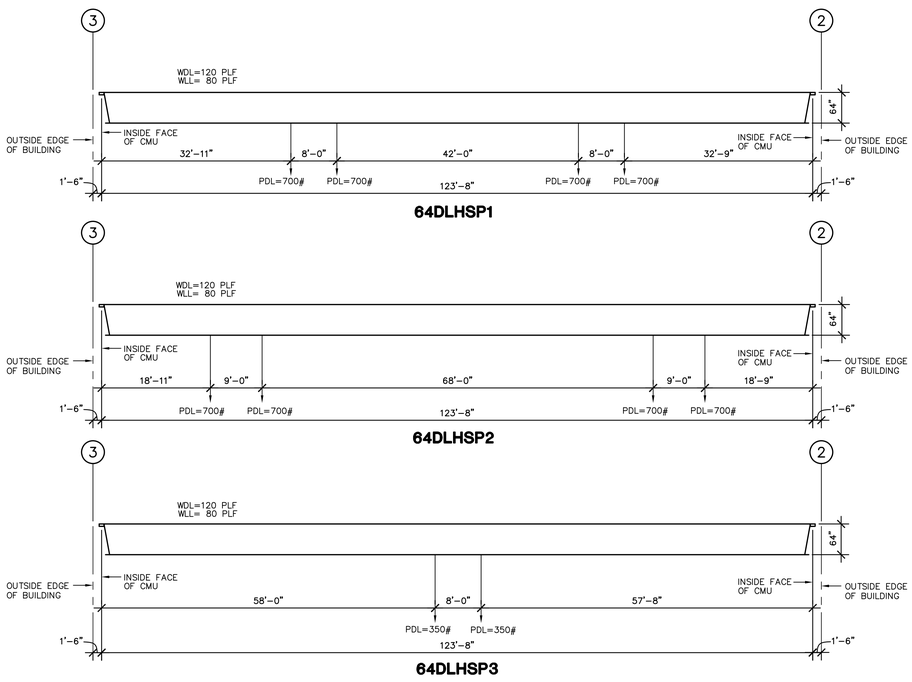

64DLHSP1

64DLHSP2

64DLHSP3

4 SPECIAL JOIST PROFILES

3/32"" = 1'-0" GYMNASIUM

NOTES:

1. SPECIAL JOIST SHALL BE LIMITED TO A DEFLECTION OF L/240 FOR TOTAL LOAD AND L/360 FOR LIVE LOAD.
2. WDL AND WLL INDICATE UNIFORM DEAD LOAD & LIVE LOAD ON STEEL JOIST, RESPECTIVELY.
3. PDL INDICATE POINT DEAD LOAD ON STEEL JOIST.
4. SPECIAL JOISTS SHALL BE DESIGNED FOR A MAXIMUM NET UPLIFT OF 25 PSF.

No.	REVISIONS	BY

GMS ARCHITECTS
1150 Paredes Line Rd.
Brownsville TX 78526
(956) 546-0110
fax (956) 546-0196

BISD Hanna ECHS
Gymnasium Facility

STATE OF TEXAS
HERIBERTO CAVAZOS
103450
LICENSED
PROFESSIONAL ENGINEER
6/12/19

© Copyright 2019
Gomez Mendez Saenz Inc.
Architects-Planners
Interior Designers

Date:	June 12, 2019
Scale:	As Noted
Drawn By:	IG, JA
Checked By:	BD, JS, CG
Job No.	192-511
Sheet:	S3.3

GREEN, RUBIANO & ASSOCIATES
CONSULTING STRUCTURAL ENGINEERS
1220 WEST HARRISON
HARLINGEN, TEXAS 78551
(956)428-4461 (956)428-0287 FAX
FIRM REGISTRATION # F-4145

COPYRIGHT 2019 BY GREEN, RUBIANO & ASSOCIATES

RText (RText)

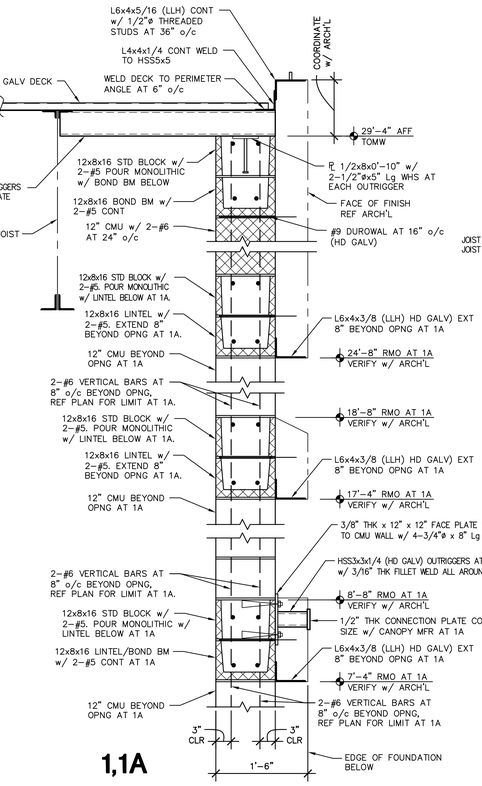

1,1A

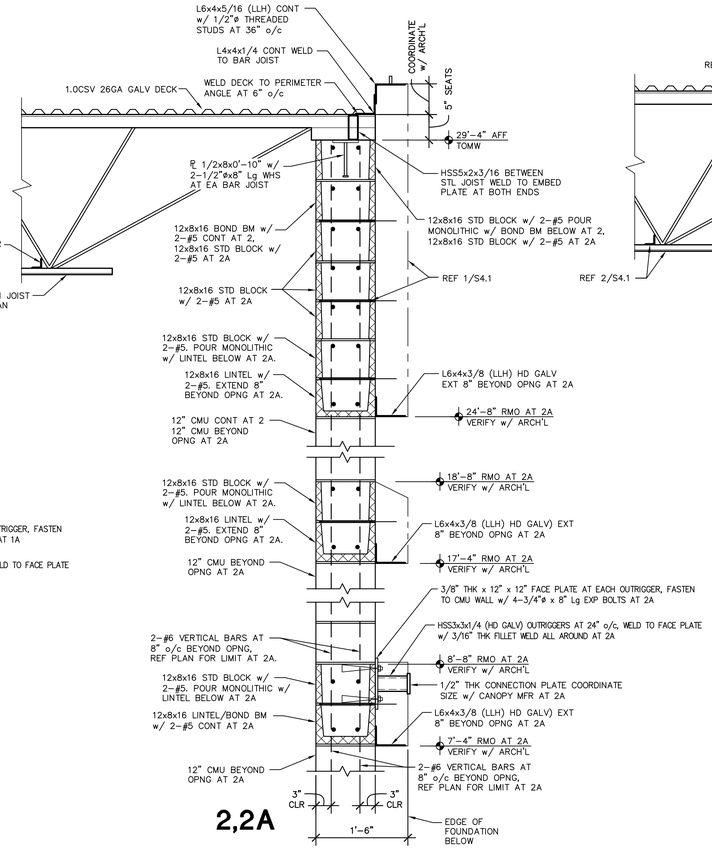

2,2A

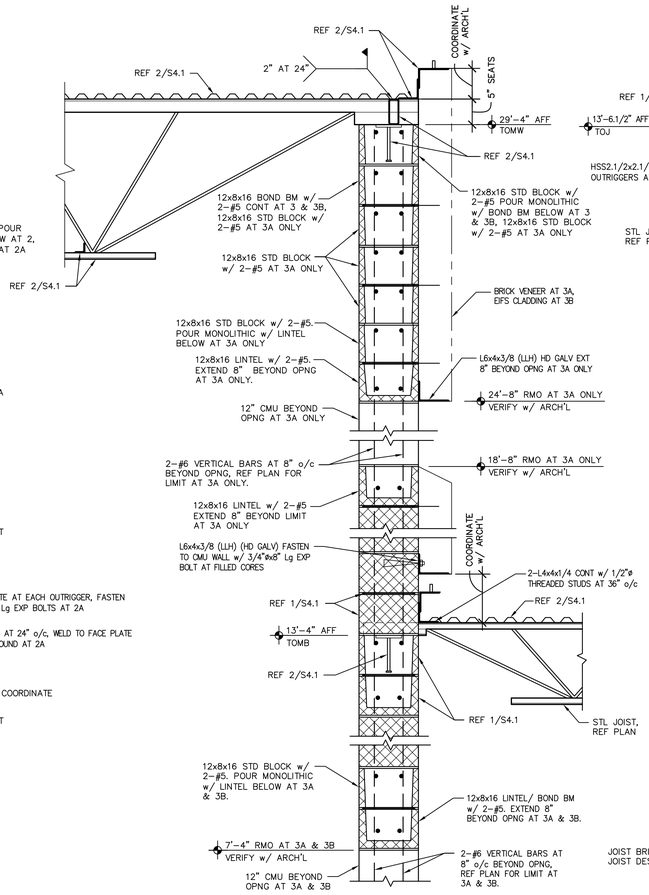

3,3A,3B

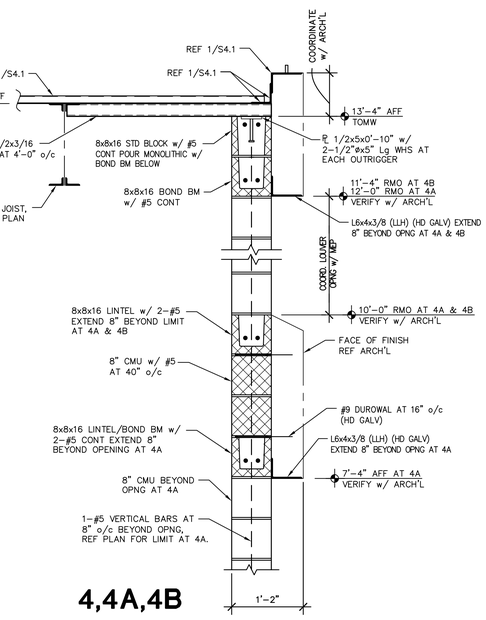

4,4A,4B

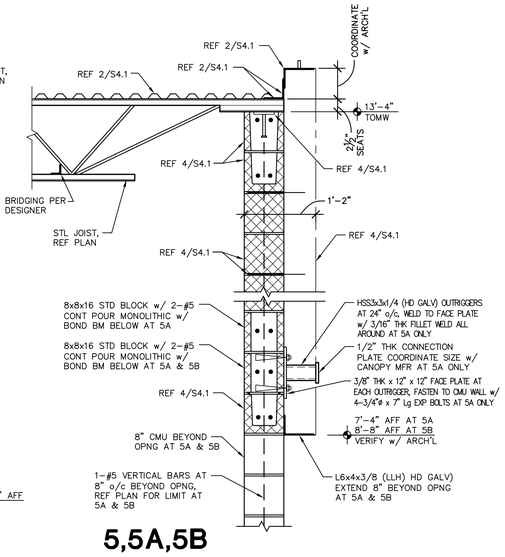

5,5A,5B

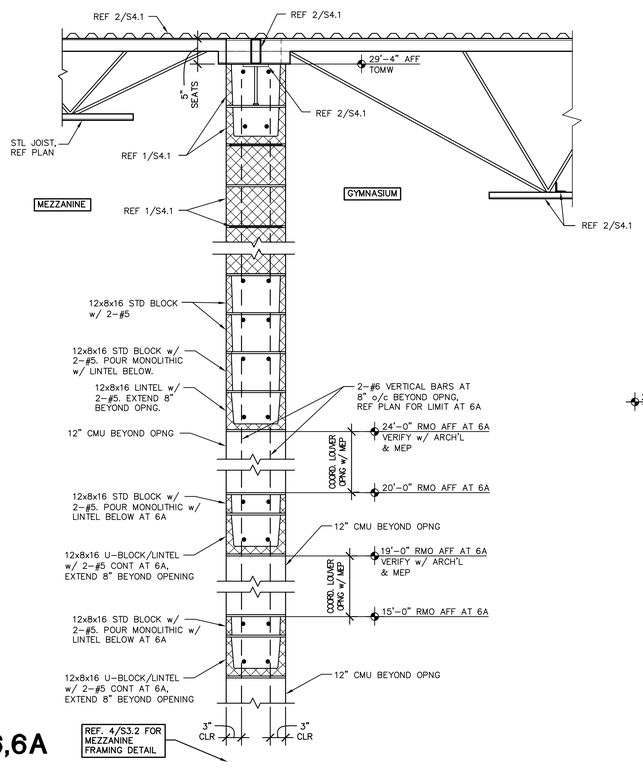

6,6A

REF. 4/S3.2 FOR MEZZANINE FRAMING DETAIL

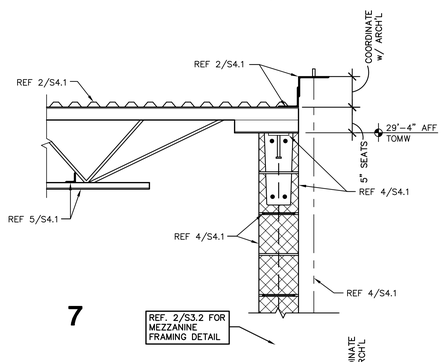

7

REF. 2/S3.2 FOR MEZZANINE FRAMING DETAIL

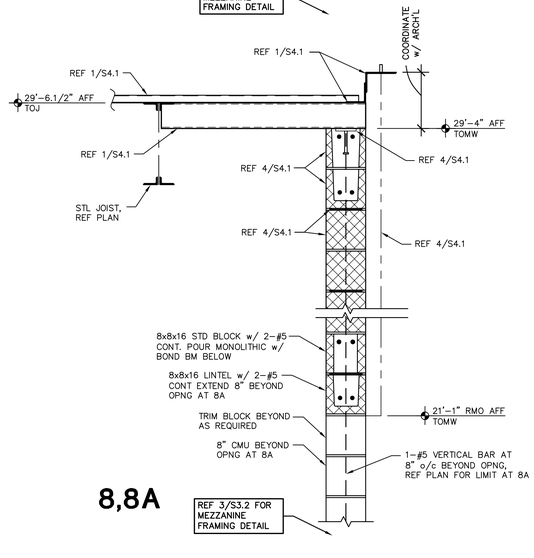

8,8A

REF 3/S3.2 FOR MEZZANINE FRAMING DETAIL

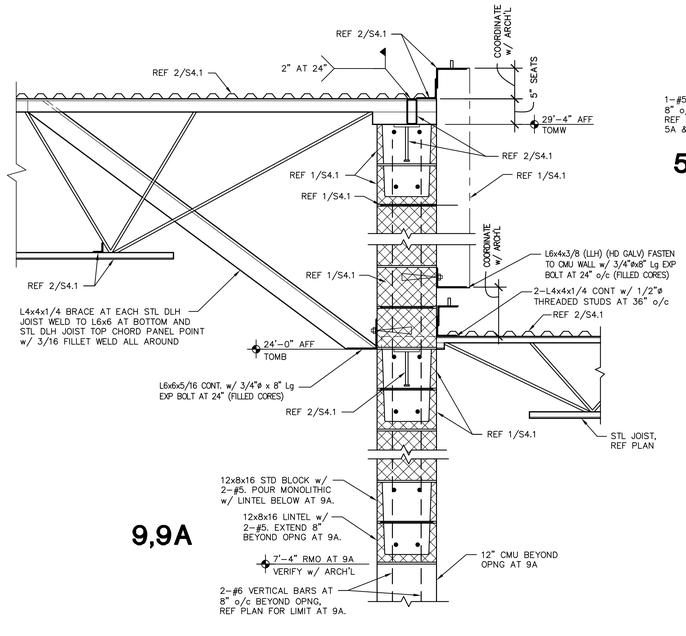

9,9A

No.	REVISIONS	BY

GMS ARCHITECTS
1150 Paredes Line Rd.
Brownsville TX 78526
(956) 546-0110
fax (956) 546-0196

BISD Hanna ECHS
Gymnasium Facility

HERMENEGILDO CAVAZOS
103459
6/12/19

© Copyright 2019
Gomez Mendez Saenz Inc.
Architects-Planners
Interior Designers

Date:	June 12, 2019
Scale:	As Noted
Drawn By:	IG, JA
Checked By:	BD, JS, CG
Job No.	192-511
Sheet:	S4.1

GREEN, RUBIANO & ASSOCIATES
CONSULTING STRUCTURAL ENGINEERS
1320 WEST HARRISON
HARLINGEN, TEXAS 78551
(956)428-4481 (956)428-0287 FAX
FIRM REGISTRATION # F-4145

COPYRIGHT 2019 BY GREEN, RUBIANO & ASSOCIATES

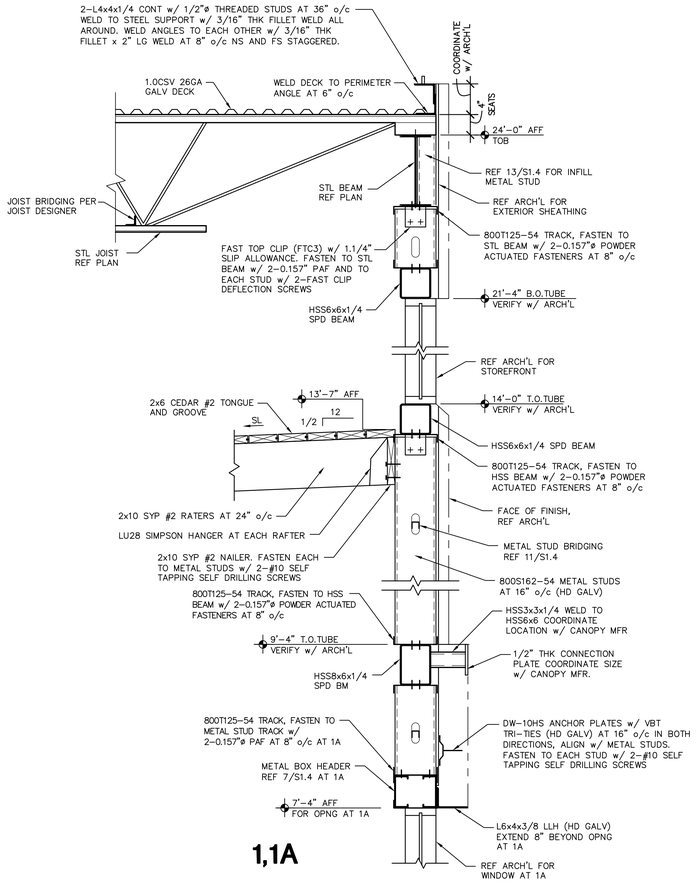

1,1A

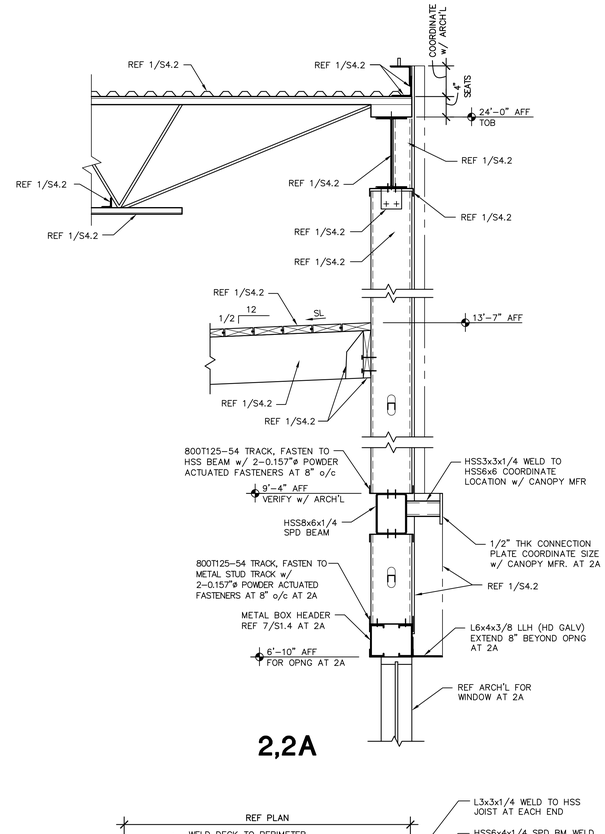

2,2A

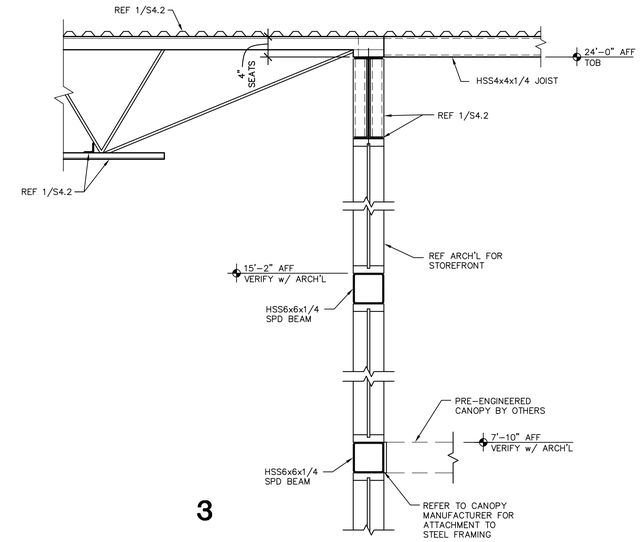

3

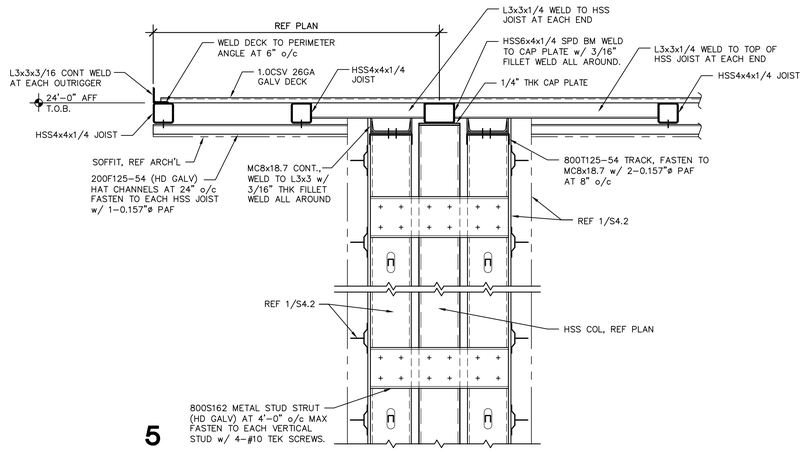

5

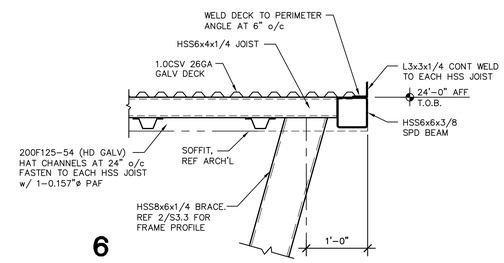

6

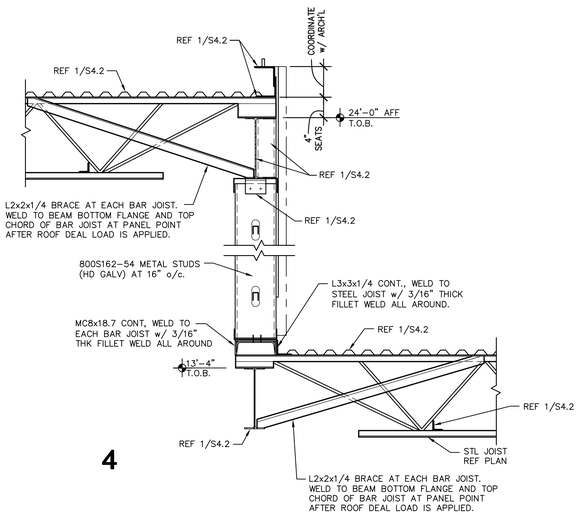

4

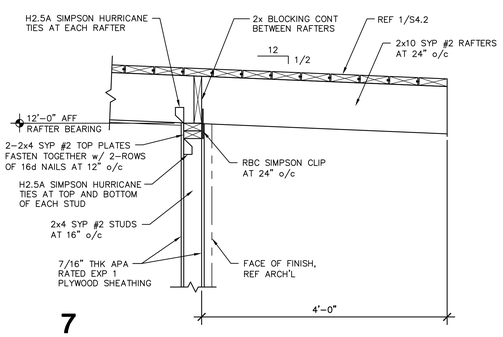

7

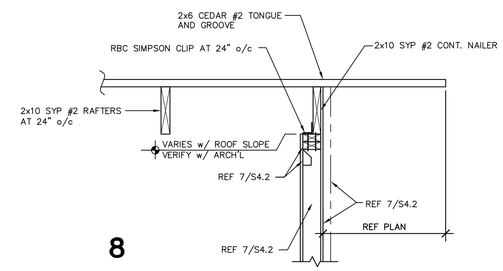

8

No.	REVISIONS	BY

GMS ARCHITECTS
1150 Paredes Line Rd.
Brownsville TX 78526
(956) 546-0110
fax (956) 546-0196

BISD Hanna ECHS
Gymnasium Facility

STATE OF TEXAS
HERMBERTO CAVAZOS
103450
LICENSED
PROFESSIONAL ENGINEER
6/12/19

© Copyright 2019
Gomez Mendez Saenz Inc.
Architects-Planners
Interior Designers

Date:	June 12, 2019
Scale:	As Noted
Drawn By:	IG, JA
Checked By:	BD, JS, CG
Job No.	192-511
Sheet:	S4.2

GREEN, RUBIANO & ASSOCIATES
CONSULTING STRUCTURAL ENGINEERS
1250 WEST HARRISON
HARLINGEN, TEXAS 78551
(956)428-4481 (956)428-0287 FAX
FIRM REGISTRATION # F-4146

COPYRIGHT 2019 BY GREEN, RUBIANO & ASSOCIATES

RText (RText)

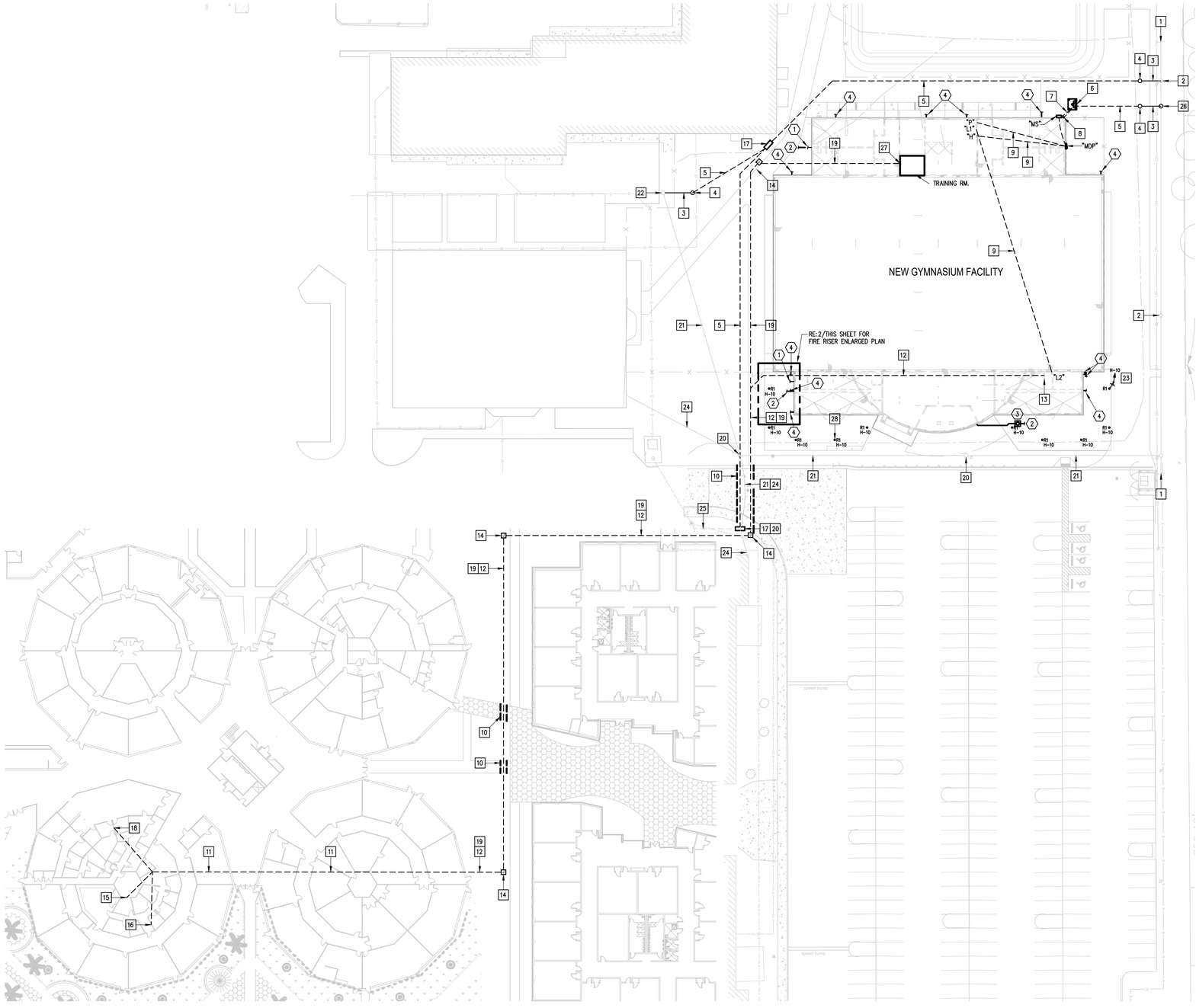

01 M.E.P SITE PLAN
SCALE : 1" = 30' - 0"

NORTH

ELECTRICAL KEYED NOTES:

1. EXISTING ELECTRIC 3ø UTILITY OVERHEAD SERVICE LINES.
2. EXISTING ELECTRIC UTILITY POWER POLE.
3. NEW ELECTRIC UTILITY OVERHEAD SERVICE LINE.
4. NEW ELECTRIC UTILITY POWER POLE WITH RISER DIP POLE.
5. PROVIDE UNDERGROUND PRIMARY ELECTRIC LINE.
6. PROVIDE ELECTRIC UTILITY PAD MOUNT TRANSFORMER CONCRETE PAD.
7. PROVIDE UNDERGROUND SECONDARY ELECTRIC LINE AND WITH 2" RED CONCRETE TOPPING.
8. PROVIDE ELECTRIC UTILITY SERVICE METER.
9. PROVIDE FEEDER TO PANELBOARDS. SEE FEEDER SCHEDULE.
10. BORE UNDER EXISTING ROAD/SIDEWALK.
11. RUN RACEWAYS IN CRAWL SPACE.
12. PROVIDE THE FOLLOWING:
    1-2" RACEWAY WITH PULLWIRE – (F.A. RACEWAYS)
    1-2" RACEWAY WITH PULLWIRE – (INTERCOM)
13. RISE UP RACEWAYS AT WIREWAY.
14. PROVIDE NEW 36"X36" TIER 22 RATED POLYMER CONCRETE PULL BOX WITH "COMMUNICATIONS" COVER LOGO – SEE DETAIL.
15. APPROXIMATE LOCATION OF EXISTING "DUKANE" INTERCOM CONSOLE.
16. APPROXIMATE LOCATION OF EXISTING MDF ROOM.
17. PROVIDE ELECTRIC UTILITY PAD MOUNT SECTIONALIZER CONCRETE PAD.
18. APPROXIMATE LOCATION OF EXISTING "EST-3" FIRE ALARM CONTROL PANEL.
19. PROVIDE 1-4" RACEWAY WITH PULLWIRE – (DATA).
20. EXISTING ELECTRIC UTILITY POWER POLE (AND FLOOD LIGHT IF APPLICABLE) TO BE REMOVED. COORDINATE WITH UTILITY COMPANY (PUB).
21. EXISTING ELECTRIC UTILITY OVERHEAD SERVICE LINES TO BE REMOVED. COORDINATE WITH UTILITY COMPANY (PUB).
22. EXISTING ELECTRIC UTILITY POWER POLE WITH POLE MOUNT TRANSFORMERS TO REMAIN. COORDINATE WITH UTILITY COMPANY (PUB).
23. CONNECT VIA LUTRON "QS" LINK.
24. EXISTING SPECIAL SYSTEMS AERIAL LINES TO BE REMOVED BY OWNER (BISD).
25. EXISTING ELECTRIC UTILITY UNDERGROUND SERVICE LINES.
26. NEW ELECTRIC UTILITY COMPANY (PUB) POWER POLE.
27. RISE UP RACEWAYS IN WALL CAVITY BEHIND DATA RACK.
28. PROVIDE BOLLARD LIGHT AS SCHEDULED. SEE DETAIL 14/E8.01.

PLUMBING KEYED NOTES:

1. PROVIDE 2 1/2" DOMESTIC WATERLINE. SEE CIVIL DRAWINGS FOR CONNECTION AND CONTINUATION. (COORDINATE)
2. PROVIDE 6" SANITARY SEWER LINE. SEE CIVIL DRAWINGS FOR CONNECTION AND CONTINUATION. (COORDINATE)
3. NEW 250 GALLON GREASE INTERCEPTOR.
4. CONNECT STORM PIPING DROP DISCHARGING AT THIS APPROXIMATE LOCATION TO STORM DRAIN SYSTEM. REFER TO PLUMBING PLAN FOR MORE DETAIL AND CIVIL PLAN FOR CONNECTION AND CONTINUATION.

FIRE SUPPRESSION KEYED NOTES:

1. PROVIDE 6" FIRE SPRINKLER LINE. REFER TO CIVIL DRAWING FOR FIRE LINE CONTINUATION. VERIFY SIZE OF FIRE SPRINKLER LINE BY MEANS OF CALCULATION AND COORDINATE WITH GENERAL CONTRACTOR. COORDINATE FREE STANDING FDC AND PROVISION OF BACKFLOW PREVENTER WITH CIVIL. REFER TO PLUMBING SHEETS AND SPECIFICATIONS FOR MORE INFORMATION.
2. PROVIDE 6" FIRE SPRINKLER LINE TO SERVE FREE STANDING FDC OUTSIDE THE BUILDING. COORDINATE WITH CIVIL. VERIFY SIZE OF FIRE SPRINKLER LINE BY MEANS OF CALCULATION AND COORDINATE WITH GENERAL CONTRACTOR.

GENERAL NOTES:

1. COORDINATE WORK AMONG ALL DISCIPLINES. IT IS NOT THE INTENT OF THESE DOCUMENTS TO DICTATE WHO MUST DO THE WORK. ALL WORK SHOWN IS THE RESPONSIBILITY OF THE (PRIME) CONTRACTOR.
2. FIELD VERIFY PROJECT SITE EXISTING CONDITIONS AND ELEVATIONS PRIOR TO BEGINNING ANY WORK.
3. COORDINATE ELECTRICAL AND PLUMBING WITH GENERAL CONSTRUCTION.
4. PHASING AND SEQUENCE OF CONSTRUCTION SHALL BE PER ARCHITECTURAL DRAWINGS AND SPECIFICATIONS.
5. FIELD VERIFY/SPOT EXACT LOCATIONS AND EXISTING CONDITIONS OF EXISTING PLUMBING, AND ELECTRICAL. IT IS THE INTENT OF THESE PLANS TO PROVIDE A COMPLETE AND WORKABLE SYSTEMS. SHOULD BIDDER FIND OMISSIONS OR DISCREPANCIES IN THE PLANS, BIDDER SHALL NOTIFY THE ENGINEER PRIOR TO THE BID DATE AND A WRITTEN CLARIFICATION WILL BE ISSUED.
6. DAMAGED ITEMS SHALL BE REPAIRED AT NO ADDITIONAL COST TO OWNER. CONTRACTORS ARE REQUIRED TO SEARCH AND INVESTIGATE FOR EXISTING UTILITIES BEFORE EXCAVATING.
7. ALL MATERIALS AND LABOR, WHETHER SPECIFICALLY INDICATED ON PLANS OR NOT, WHICH ARE NECESSARY FOR THE PROPER INSTALLATION AND FUNCTION OF THE SYSTEM SHALL BE FURNISHED BY THIS CONTRACTOR. INCLUDE ALL COSTS OF CHANGES, IF/AS REQUIRED IN BID PROPOSAL.
8. PROVIDE J-BOXES (POLYMER CONCRETE) AS REQUIRED FOR PULL WIRING.
9. ELECTRICAL WIRING SHALL NOT BE SPLICED BELOW GRADE.
10. PERFORM ALL WORK PER LATEST VERSION OF NATIONAL ELECTRICAL CODE, AND APPLICABLE LOCAL CODES AND ORDINANCES, UNLESS DRAWINGS OR SPECIFICATIONS HAVE MORE STRINGENT REQUIREMENTS.
11. CONTRACTOR IS RESPONSIBLE FOR ALL PERMITS AND FEES ASSOCIATED WITH PROJECT, INCLUDING FEES FOR INSPECTIONS, APPLICATIONS, AND PROVISION OF NEW SERVICES.
12. CONTRACTOR WHO WILL ACTUALLY PERFORM WORK MUST APPLY FOR ALL REQUIRED PERMITS.
13. NOTIFY ENGINEER OF ANY ASPECTS OF DESIGN WHICH ARE THOUGHT TO BE IN NONCOMPLIANCE WITH APPLICABLE CODES.
14. COORDINATE ALL WORK WITH OTHER TRADES; COORDINATE SCHEDULE OF WORK WITH ALL SUB-CONTRACTORS TO ACHIEVE SMOOTH FLOW OF CONSTRUCTION.
15. SEAL AROUND ELECTRICAL RACEWAYS AT ALL WALLS, A/C ROOMS AND WALL LOUVER PENETRATIONS WITH FIREPROOF CAULKING. RE: SPECS. PROVIDE FLASHING AROUND PENETRATION, BOTH INSIDE AND OUTSIDE, TO PROVIDE FINISHED LOOK.
16. TIME OR MONEY ALLOWANCES WILL NOT BE MADE TO ACCOMMODATE UTILITY CONFLICTS THAT CAN BE REASONABLY RESOLVED BY COORDINATION DURING SHOP DRAWING PHASE.
17. CONTRACTOR SHALL REVIEW COMPLETE DOCUMENTS PRIOR TO SUBMITTAL OF PROPOSAL TO GAIN COMPLETE UNDERSTANDING OF PROJECT SCOPE, WORK BY OTHERS, AND ELECTRICAL WORK ASSOCIATED WITH OTHER DISCIPLINES.
18. MAINTAIN MANUFACTURER RECOMMENDED CLEARANCE AROUND ALL EQUIPMENT.
19. AFFIX ID TAGS TO ALL DIVISION 26 EQUIPMENT.
20. CONTRACTOR IS RESPONSIBLE FOR COORDINATION WITH MECHANICAL AND PLUMBING CONTRACTOR REGARDING EQUIPMENT SIZES AND TYPES OF ELECTRICAL INTERFACE EQUIPMENT REQUIRED.
21. FIELD VERIFY ALL CONDITIONS AND MEASURE DIMENSIONS WITHIN THE BUILDING PRIOR TO ORDERING EQUIPMENT AND/OR PROCEEDING WITH INSTALLATION.
22. ALL EQUIPMENT SHALL BE FACTORY TESTED, AND CONTRACTOR SHALL VERIFY THEIR CONDITION PRIOR TO INSTALLATION. CONTRACTOR IS RESPONSIBLE FOR EQUIPMENT DAMAGED DURING MOVING AND INSTALLATION.
23. EQUIPMENT FOUND DEFECTIVE PRIOR TO FINAL ACCEPTANCE SHALL BE REPLACED AT NO COST TO OWNER.
24. WORK TO BE DONE UNDER ALLOWANCES BECOMES AN INTEGRAL PART OF THE PROJECT AND RESPONSIBILITY OF CONTRACTOR ONCE ALLOWANCE IS APPROVED.
25. SLEEVE ALL EXTERIOR WALL PENETRATIONS.
26. CONTRACTOR SHALL NOT PROCEED WITH ANY WORK INVOLVING A CHANGE IN PROJECT SCOPE OR COST WITHOUT FIRST HAVING OBTAINED ENGINEER'S APPROVAL IN WRITING. UNLESS ENGINEER HAS AGREED TO SUCH CHANGE PRIOR TO IT BEING DONE, AND HAS AGREED THAT AN INCREASE IN COST ASSOCIATED WITH SUCH CHANGE IS WARRANTED; CONTRACTOR WILL NOT BE REIMBURSED FOR SUCH CHANGE.

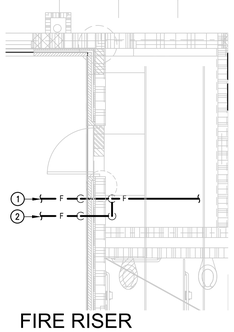

02 FIRE RISER ENLARED PLAN
SCALE : 1/4" = 1' - 0"

NORTH

DETAIL KEYED NOTES

1. SLEEVE.
2. PROVIDE 1" CLOSED-CELL INSULATION WITH ALUMINUM METAL JACKET ON EXPOSED PIPING.
3. PIPE TO SERVE FDC OUTSIDE THE BUILDING.

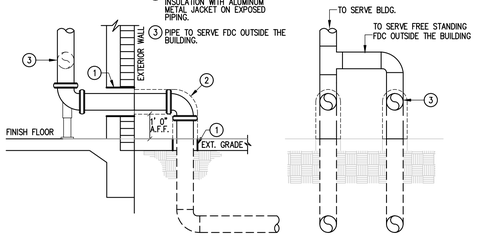

03 FIRE RISER ENTRANCE DETAIL
SCALE : NOT TO SCALE

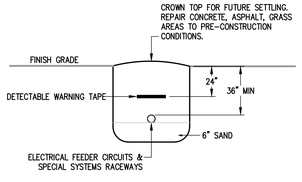

04 BURIAL DETAIL FOR ELECTRICAL RACEWAYS
SCALE : NONE

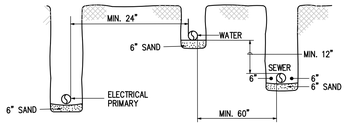

05 TRENCHING DETAIL
SCALE : NONE

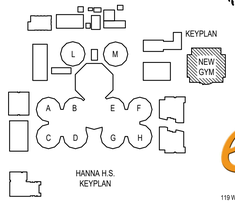

ethos engineering
119 W. VAN BUREN AVE. STE:101
HARLINGEN, TX.
PHONE: 956-230-3435
TEXAS REGISTERED
ENGINEERING FIRM
F-15998

STATE OF TEXAS
CESAR A. GONZALEZ
108611
06.12.2019

STATE OF TEXAS
RAY PEYNADO
125390
06.12.2019

No.	REVISIONS	BY

GMS ARCHITECTS
1150 Paredes Line Rd.
Brownsville TX 78526
(956) 546-0110
fax (956) 546-0196

BISD Hanna ECHS Gymnasium Facility

© Copyright 2019
Gomez Mendez Saenz Inc.
Architects-Planners
Interior Designers

Date: June 12, 2019
Scale: As Noted
Project Architect: David Monreal, AIA
Drawn By: ETHOS
Job No: BISD Hanna Gymnasium
Sheet: MEP1.01

EQUIPMENT:

1. EQUIPMENT INSPECTION:
   a. FIELD VERIFY ALL CONDITIONS AND MEASURE DIMENSIONS WITHIN THE BUILDING PRIOR TO ORDERING EQUIPMENT AND/OR PROCEEDING WITH INSTALLATION.
   b. ALL EQUIPMENT SHALL BE FACTORY TESTED, AND CONTRACTOR SHALL VERIFY EQUIPMENT CONDITION PRIOR TO INSTALLATION. CONTRACTOR IS RESPONSIBLE FOR EQUIPMENT DAMAGED DURING MOVING AND INSTALLATION.
   c. EQUIPMENT FOUND DEFECTIVE PRIOR TO FINAL ACCEPTANCE SHALL BE REPLACED AT NO COST TO OWNER.
2. EQUIPMENT ACCESS:
   a. MAKE ALL VALVES ACCESSIBLE, INCLUDING MANUAL SHUTOFF VALVES AND AUTOMATIC VALVES. VALVES SHOULD BE CLOSE TO THE UNIT BEING SERVED AND REACHABLE BY A 5'-6" PERSON STANDING ON THE FLOOR NEARBY, WITHOUT NEED FOR A LADDER. WHERE SHUTOFF VALVES SERVE AN ABOVE-CEILING UNIT ACCESSIBLE ONLY BY LADDER, THE SHUTOFF VALVES SHOULD BE CLOSE ENOUGH TO THE UNIT SO THAT MAINTENANCE PERSONNEL CAN SHUT THE VALVES AND ACCESS THE CONTROL PANEL WITHOUT HAVING TO RELOCATE THE LADDER. WHERE PIPING CONFIGURATION MAKES IT IMPOSSIBLE TO LOCATE SHUTOFF VALVES IN THE MANNER DESCRIBED ABOVE, OBTAIN APPROVAL FROM OWNER AND/OR ENGINEER FOR ALTERNATE LOCATION.
   b. FOR EQUIPMENT WHICH MAY REQUIRE PERIODIC SERVICING (SUCH AS AIR HANDLERS) AND WHICH IS LOCATED ABOVE A SUSPENDED CEILING, CONTRACTOR IS TO PROVIDE A MARKER ON CEILING GRID WHICH CLEARLY INDICATES WHICH CEILING TILE IS TO BE REMOVED TO MOST CONVENIENTLY ACCESS EQUIPMENT SIDE NEEDING SERVICING. THE MARKER IS TO BE ROUND DOT OF HEAVY DUTY COLORED PAPER, WITH DIRECTION INDICATION, WITH ADHESIVE BACKING. OBTAIN ARCHITECT APPROVAL FOR COLOR, SIZE, AND TYPE PRIOR TO INSTALLATION.
   c. PROVIDE MANUFACTURER RECOMMENDED AND CODE ENFORCED CLEARANCES AROUND EQUIPMENT. MAINTAIN 36" CLEAR IN FRONT OF EFs CONTROLLER, ELECTRIC HEATERS, ETC.
   d. INSTALL ALL VALVES, CONTROLS, DAMPERS, FANS, ETC. IN ACCESSIBLE LOCATIONS. PROVIDE ADEQUATELY SIZED ACCESS DOORS WHERE REQUIRED.
3. EQUIPMENT INSTALLATION:
   a. PROVIDE SPRING HANGER TYPE VIBRATION ISOLATORS TO SUPPORT SUSPENDED AHUS, FANS AND OTHER POWERED VIBRATING EQUIPMENT. PROVIDE FLEXIBLE DUCT CONNECTORS.
   b. FOR ALL AIR CONDITIONING UNITS WHICH ARE LOCATED ABOVE SUSPENDED CEILINGS, OR ABOVE HARDWOOD FLOORS, OR OTHER BUILDING SURFACES / MATERIALS WHICH COULD BE DAMAGED BY LEAKING WATER, PROVIDE A SECONDARY DRAIN PAN BENEATH THE UNIT, WITH EITHER: A) A SEPARATE CONDENSATE DRAIN LINE, COPPER, INSULATED AND PIPED TO A SUITABLE DISPOSAL POINT (SUCH AS TO A LAVATORY DRAIN TAILPIECE, FLOOR DRAIN, ETC; DO NOT TERMINATE SECONDARY DRAIN PIPE THROUGH A SUSPENDED CEILING WHERE IT WILL DRIP INTO A SINK OR LAVATORY UNLESS APPROVED BY ENGINEER); OR B) A FLOAT SWITCH OR MOISTURE SENSING SWITCH, LOCATED IN SECONDARY DRAIN PAN, AND ELECTRICALLY INTERLOCKED WITH UNIT FAN TO TURN UNIT OFF WHEN MOISTURE IS SENSED.
   c. COMPLETELY WEATHERPROOF ALL EQUIPMENT, DUCTS, PIPES AND OTHER DEVICES AND MATERIALS INSTALLED OUTSIDE THE BUILDING, CHILLER YARD AREA, OR OTHERWISE EXPOSED TO WEATHER. AS A MINIMUM, WEATHERPROOFING SHALL INCLUDE, BUT IS NOT LIMITED TO THE FOLLOWING: JACKETING FOR ALL PIPING INSULATION, VALVES AND ACCESSORIES RATED FOR OUTDOOR SERVICE, ELECTRICAL ENCLOSURES NEMA 4X-SS. PROVIDE ELECTRICAL HEAT TRACING FOR UTILITIES SUSCEPTIBLE TO FREEZING.
   d. AFFIX ID TAGS TO ALL MECHANICAL EQUIPMENT PER SPECIFICATIONS.
4. EQUIPMENT INSULATION:
   a. INSULATE ALL SURFACES OF THAT ARE CAPABLE OF BECOMING COLD AND COLLECTING CONDENSATE. THIS INCLUDES SUPPLY DIFFUSERS AND CONNECTING DUCTWORK / TRANSITION PIECES.
5. PLUMBING:
   a. COORDINATE LOCATIONS WITH PLUMBING CONTRACTOR.
   b. COORDINATE CONDENSATE RECOVERY SYSTEM WITH PLUMBING CONTRACTOR.
   c. PROVIDE INSULATED AND TRAPPED CONDENSATE DRAIN LINES FROM ALL AIR CONDITIONING EQUIPMENT AND TERMINATE TO NEAREST CONDENSATE DRAIN RECEPTORS OR OTHER APPROVED RECEPTACLES. COORDINATE WITH PLUMBING.
6. ELECTRICAL:
   a. CONTRACTOR IS RESPONSIBLE FOR COORDINATION WITH ELECTRICAL CONTRACTOR REGARDING EQUIPMENT SIZES AND TYPES OF ELECTRICAL INTERFACE EQUIPMENT REQUIRED.
   b. DUE TO VARIATIONS IN EQUIPMENT CHARACTERISTICS BY DIFFERENT EQUIPMENT SUPPLIERS, MECHANICAL EQUIPMENT ULTIMATELY PROVIDED MAY DIFFER IN HORSEPOWER OR AMPERAGE REQUIREMENTS FROM THAT SPECIFIED IN THESE DRAWINGS. COORDINATE WITH GENERAL CONTRACTOR PRIOR TO BIDDING, AND PRIOR TO SUBMITTALS AND ORDERING EQUIPMENT, TO ENSURE THAT EQUIPMENT ELECTRICAL REQUIREMENTS ARE CONVEYED TO ELECTRICAL CONTRACTOR. IT IS SOLELY CONTRACTOR'S RESPONSIBILITY TO ENSURE COMPATIBILITY ISSUES ARE COORDINATED.

COORDINATION:

1. GENERAL:
   a. CONTRACTOR SHALL REVIEW COMPLETE DOCUMENTS PRIOR TO SUBMITTAL OF PROPOSAL TO GAIN COMPLETE UNDERSTANDING OF PROJECT SCOPE, WORK BY OTHERS, AND MECHANICAL WORK ASSOCIATED WITH OTHER DISCIPLINES.
   b. IT IS NOT THE INTENT OF THESE DOCUMENTS TO DICTATE WHO MUST DO THE WORK. ALL WORK SHOWN IS THE RESPONSIBILITY OF THE (PRIME) CONTRACTOR. COORDINATE MECHANICAL WITH OTHER TRADES SUCH AS PLUMBING, ELECTRICAL AND STRUCTURAL WORK. COORDINATE SCHEDULE OF WORK WITH ALL SUB-CONTRACTORS TO ACHIEVE SMOOTH FLOW OF CONSTRUCTION.
   c. TIME OR MONEY ALLOWANCES WILL NOT BE MADE TO ACCOMMODATE UTILITY CONFLICTS THAT CAN BE REASONABLY RESOLVED BY COORDINATION DURING SHOP DRAWING STAGE.
   d. PROVIDE COORDINATION DRAWINGS OF REFLECTED CEILING PLAN AND SECTION ABOVE CEILING SHOWING WORK OF ALL AFFECTED TRADES. DO NOT PROCEED WITH FABRICATION WORK UNTIL COORDINATION DRAWINGS HAVE BEEN APPROVED BY A/E.
   e. CONTRACTOR SHALL NOT PROCEED WITH ANY WORK INVOLVING A CHANGE IN PROJECT SCOPE OR COST WITHOUT FIRST HAVING OBTAINED ENGINEER'S APPROVAL IN WRITING. UNLESS ENGINEER HAS AGREED TO SUCH CHANGE PRIOR TO IT BEING DONE, AND HAS AGREED THAT AN INCREASE IN COST ASSOCIATED WITH SUCH CHANGE IS WARRANTED; CONTRACTOR WILL NOT BE REIMBURSED FOR SUCH CHANGE.
   f. WORK TO BE DONE UNDER ALLOWANCES BECOMES AN INTEGRAL PART OF THE PROJECT AND RESPONSIBILITY OF CONTRACTOR ONCE ALLOWANCE IS APPROVED.
2. SITE:
   a. CONTRACTOR IS RESPONSIBLE FOR VERIFYING ALL SITE CONDITIONS IN ORDER TO MAKE ANY NECESSARY ADJUSTMENTS, PRIOR TO ORDERING MATERIALS OR COMMENCING INSTALLATION. CHANGE ORDERS WILL NOT BE APPROVED FOR DIMENSIONAL VERIFICATIONS REQUIRING MINOR ADJUSTMENTS NEEDED TO COMPLETE INSTALLATION.
3. ARCHITECTURAL AND STRUCTURAL:
   b. REFER TO ARCHITECTURAL AND STRUCTURAL PLANS FOR DETAILS OF CONSTRUCTION, INCLUDING BEAMS, FLOOR AND WALL PENETRATIONS, CHASES, AND REFLECTED CEILING PLANS. VERIFY OPENING SIZES WITH EQUIPMENT FURNISHED.
   c. WHERE EXPRESSLY PERMITTED BY THE STRUCTURAL ENGINEER, GRADE BEAM PENETRATIONS SHALL BE MADE WITHIN MIDDLE 1/3 OF VERTICAL SPAN OF BEAM. SLEEVE ALL EXTERIOR WALL AND GRADE BEAM PENETRATIONS.
   d. SEAL AROUND DUCTS AND PIPING AT ALL WALLS, A/C ROOMS AND WALL LOUVER PENETRATIONS WITH FIREPROOF CAULKING. RE: SPECS. PROVIDE ESCUTCHEON PLATES AND FLASHING AROUND PENETRATION, BOTH INSIDE AND OUTSIDE, TO PROVIDE A FINISHED LOOK. COORDINATE FINISH WITH ARCHITECT.
4. SPATIAL COORDINATION:
   a. COORDINATE ALL WORK WITH OTHER TRADES; COORDINATE SCHEDULE OF WORK WITH ALL SUB-CONTRACTORS TO ACHIEVE SMOOTH FLOW OF CONSTRUCTION.
   b. SPACES ABOVE CEILING ARE CONGESTED. DESIGN INTENT IS THAT UTILITIES BE INSTALLED TIGHT AGAINST CEILING STRUCTURE TO EXTENT POSSIBLE, WHILE RETAINING ADEQUATE MAINTENANCE ACCESS PER CODES.
   c. IN CASE OF CONFLICTS, ITEMS SHALL BE ARRANGED ACCORDING TO THE FOLLOWING PRIORITIES: LIGHTING, FIRE PROTECTION, HVAC. PROVIDE OFFSETS/RISES/DROPS REQUIRED TO RESOLVE CONFLICTS WITH OTHER UTILITIES, AND TO ACCOMMODATE ALL UTILITIES ABOVE CEILINGS.
   d. IN GENERAL, REROUTE SMALLER DUCTS/PIPES THROUGH JOISTS TO RESOLVE CONFLICTS WITH LARGER. PERFORM REROUTING IN MOST EFFICIENT MANNER POSSIBLE, AND IN ACCORDANCE WITH INDUSTRY STANDARDS.
   e. PROVIDE COORDINATION DRAWINGS OF REFLECTED CEILING PLAN AND SECTION ABOVE CEILING SHOWING WORK OF ALL AFFECTED TRADES. DO NOT PROCEED WITH FABRICATION WORK UNTIL COORDINATION DRAWINGS HAVE BEEN APPROVED BY A/E.
   f. SEE ELECTRICAL PLANS FOR EXACT LOCATION OF ELECTRICAL PANELS TO AVOID DUCTWORK AND PIPING RUNNING OVER THESE AREAS. COORDINATE WITH ELECTRICAL CONTRACTOR.
   g. LOCATE AIR DEVICES AS SHOWN. COORDINATE WITH OTHER TRADES TO AVOID CONFLICT AND ADJUST LOCATION IF NEEDED WITHOUT COMPROMISING AIR DEVICES PERFORMANCE.

GENERAL NOTES:

1. TEST & BALANCE:
   a. TEST AND BALANCE CONTRACTOR SHALL BE RETAINED BY THE PRIME CONTRACTOR AND NOT UNDER THE MECHANICAL CONTRACTOR. ALL SUB-CONTRACTORS SHALL COORDINATE ACTIVITIES AND ASSIST TEST AND BALANCE CONTRACTOR AS NEEDED.
   b. TEST & BALANCE TO COORDINATE MINIMUM AND MAXIMUM OUTSIDE AIR DAMPER SETTINGS WITH DDC CONTROLS AND ENGINEER. PROVIDE TIME ALLOTMENT FOR MULTIPLE DAMPER SETTINGS IN SOME CASES.
2. PAINTING:
   a. PROVIDE EPOXY PAINTING FOR PIPING PRIOR TO INSULATING.
   b. PAINTING: WHERE EXPOSED TO VIEW, PAINT ALL PIPING, DUCTWORK, AIR DEVICES, INSULATION, AND OTHER MATERIALS. COORDINATE FINISH AND COLOR WITH ARCHITECT.

CODES & ORDINANCES:

1. GENERAL:
   a. UNLESS DRAWINGS OR SPECIFICATIONS HAVE MORE STRINGENT REQUIREMENTS, PERFORM ALL WORK PER APPLICABLE VERSION OF INTERNATIONAL BUILDING CODES, AND LOCAL CODES AND ORDINANCES.
   b. PRIOR TO SUBMITTING PROPOSAL, NOTIFY ENGINEER OF ANY ASPECTS OF DESIGN WHICH ARE THOUGHT TO BE IN NONCOMPLIANCE WITH APPLICABLE CODES.
2. WIND STORM CERTIFICATION:
   a. CONTRACTOR SHALL DESIGN, CONSTRUCT AND INSTALL EXTERIOR AND ROOF MOUNTED EQUIPMENT TO MEET GOVERNING BUILDING CODES.
3. PERMITS:
   a. CONTRACTOR IS RESPONSIBLE FOR ALL PERMITS AND FEES ASSOCIATED WITH PROJECT, INCLUDING FEES FOR INSPECTIONS, APPLICATIONS, AND PROVISION OF NEW SERVICES.
   b. CONTRACTOR WHO WILL ACTUALLY PERFORM WORK MUST APPLY FOR ALL REQUIRED PERMITS.
4. APPROVALS AND INSPECTIONS:
   a. OBTAIN APPROVAL FROM CITY FIRE DEPARTMENT AND BUILDING AND SAFETY DEPARTMENT PRIOR TO INSTALLATION OF ANY FIRE RELATED ITEMS.
   b. COORDINATE PRESSURE TESTS, INSPECTIONS AND APPROVAL FOR ALL SYSTEMS WITH PERMITTING OFFICER, OWNER AND ENGINEER.
   c. CONTRACTOR SHALL BE RESPONSIBLE FOR PROVIDING WIND STORM CERTIFICATION INSPECTIONS AND CERTIFICATIONS FOR ROOFTOP EQUIPMENT. CONTRACTOR MUST NOTIFY INSPECTOR PRIOR TO INSTALLING EQUIPMENT, AND APPRISE INSPECTOR OF WORK SCHEDULING INVOLVING EQUIPMENT REQUIRING WIND INSPECTION / CERTIFICATION, SO THAT INSPECTIONS MAY BE CARRIED OUT AT REQUIRED STAGE(S) OF CONSTRUCTION.

CONTROLS:

1. DDC CONTROLS CONTRACTOR SHALL COOPERATE AND COORDINATE WORK ACTIVITIES WITH PRIME CONTRACTOR TO ENSURE SMOOTH TROUBLE-FREE INSTALLATION.
2. PROVIDE FULL COLOR GRAPHICS. ON THE GRAPHIC PAGES FOR ALL EQUIPMENT AND/OR MONITORED DEVICES (SUCH AS SENSORS, METERS, DAMPERS, VALVES, ETC.) GIVE A CLEAR, GRAPHICAL INDICATION AS TO WHETHER EQUIPMENT OR DEVICE HAS BEEN PLACED IN MANUAL OPERATION, OVERRIDING AUTOMATIC OPERATION. (FOR EXAMPLE, PLACE AN "M" NEXT TO EQUIPMENT THAT HAS BEEN PLACED IN MANUAL OPERATION.)
3. WHERE NOT SPECIFICALLY INDICATED ON PLANS, DDC CONTRACTOR IS RESPONSIBLE FOR ALL CONTROL RELAYS AND CONTACTORS, POWER TO DDC PANELS AND OTHER CONTROL ELEMENTS. ALTHOUGH DDC CONTRACTOR MAY COORDINATE WITH OTHER TRADES TO PROVIDE MISCELLANEOUS ELECTRICAL WORK, THE FINAL RESPONSIBILITY FOR ACHIEVEMENT OF CONTROL SEQUENCES LIES WITH THE DDC CONTRACTOR.
4. DRAWINGS SHOW GENERAL LOCATION OF DDC SENSORS (T, RH, AND CO2). UNLESS NOTED OTHERWISE, INSTALL SENSORS AT 48" ABOVE FINISHED FLOOR. WIRING SHALL BE IN CONCEALED WALLS. IN CASE OF CONFLICTS WITH FURNITURE, WINDOWS, ETC., COORDINATE EXACT LOCATION WITH ARCHITECT AND ENGINEER.
5. REFER TO OPERATING SEQUENCE IN SPECIFICATIONS FOR ALARMS AND SEQUENCES REQUIRED.
6. PROVIDE WEB-SERVER. SEE SPECIFICATIONS.
7. RECOMMENDED DIVISION OF RESPONSIBILITIES BETWEEN SUB-CONTRACTORS IS AS FOLLOWS:
   a. DDC CONTRACTOR IS RESPONSIBLE FOR ETHERNET WIRING FROM MDF ROOM TO CONTROLLER. COORDINATE ETHERNET CONNECTIVITY AND ROUTING WITH OWNER'S IT STAFF.
   b. DDC CONTRACTOR SHALL COORDINATE CONTROL WIRING BETWEEN CONTROL PANELS AND UNITARY CONTROLLERS.
   c. WITH ELECTRICAL SUB CONTRACTOR, CONTROL CONTRACTOR COORDINATES 120V POWER WIRING AND CONDUIT TO NEW CONTROLLERS (AND CIRCUIT BREAKERS, IF NO SPARES EXIST)
   d. CONTROLS CONTRACTOR SUPPLIES HYDRONIC VALVES, DAMPERS, THERMOWELLS, ETC. TO MECHANICAL CONTRACTOR FOR INSTALLATION. COORDINATE OUTSIDE AND RETURN AIR DAMPERS WITH AHU MANUFACTURER
   e. CONTROLS CONTRACTOR IS RESPONSIBLE FOR:
      * DAMPER AND VALVE ACTUATORS
      * GATEWAY INTERFACES AND ALL RELATED ACCESSORIES FOR FULL COMMUNICATION BETWEEN EQUIPMENT (CHILLERS, VFDS, ETC.) AND DDC SYSTEM
      * ADJUSTABLE RANGE/FLAT PLATE THERMOSTATS, RH, CO2 SENSING DEVICES
      * EQUIPMENT CONTROLLERS, SOFTWARE, PROGRAMMING.
      * ALL NETWORK CONTROL PANELS, DDC CONTROLLERS, SOFTWARE, AND PROGRAMMING.
      * WIRING AND CONDUIT FOR CONTROL AND MONITORING DEVICES
      * CONTROL RELAYS
      * SHOP DRAWINGS PER SPECIFICATIONS
      * SYSTEM CHECK OUT, OWNER TRAINING, DDC SYSTEM WARRANTY WORK

DUCTWORK:

1. DUCTWORK GENERAL:
   a. DRAWINGS ARE DIAGRAMMATIC IN NATURE. FOR CLARITY SAKE, MOST DUCT OFFSETS/RISES/DROPS ARE NOT SHOWN. WHERE DUCTS PENETRATE WALLS, INSTALL THEM PERPENDICULAR TO WALL.
   b. RECTANGULAR AND ROUND DUCTWORK SHALL BE GALVANIZED STEEL. SIZES SHOWN ARE INSIDE CLEAR DIMENSION, UNLESS NOTED OTHERWISE.
   c. VERIFY BOTTOM OF DUCT ELEVATION AND COORDINATE WITH OTHER TRADES.
   d. CONSTRUCT AND LEAKAGE TEST ALL DUCTWORK BASED ON SPECIFICATIONS AND SMACNA REQUIREMENTS, WHICHEVER IS MORE STRINGENT. COORDINATE PRESSURE CLASSES WITH EQUIPMENT SCHEDULES.
   e. FLEXIBLE DUCTS MAXIMUM LENGTH SHALL NOT EXCEED 6 FEET. USE OF FLEXIBLE DUCTWORK IS LIMITED TO AREAS WITH AN ACCESSIBLE SUSPENDED CEILING. PINCHED DUCT WILL HAVE TO BE REPLACED.
   f. IN AREAS WHERE DUCT CONFLICTS CANNOT BE AVOIDED, ROUTE SMALLER DUCTS THROUGH STRUCTURAL ROOF JOISTS.
   g. LOCATE AIR DEVICES AS SHOWN. COORDINATE WITH ELECTRICAL, IF NEEDED. RELOCATE DIFFUSER TO ADJACENT TILE.
2. DUCTWORK INSULATION:
   a. WRAP ALL OUTSIDE AIR, SUPPLY AND RETURN DUCTWORK UNLESS NOTED OTHERWISE.
   b. IN ADDITION, FOR ACOUSTICAL PERFORMANCE INTERNALLY LINE FIRST 10' OF SUPPLY AND LAST 10' OF RETURN DUCTWORK.
   c. PROVIDE ACOUSTICAL LINING FOR ALL TRANSFER DUCTS AND RETURN AIR ELBOWS.
   d. INSULATION ON DUCT SHOULD TO BE PROPERLY TAPED AND MASTICS MUST BE APPLIED ON SEAMS AND JOINTS AND AT ENDS ADJACENT TO DUCT FLANGES AND FITTINGS. FOR DUCT SIDES WITH DIMENSIONS LARGER THAN 18 INCHES, APPLY ADDITIONAL PINS AND CLIPS TO HOLD INSULATION TIGHTLY AGAINST SURFACE AT CROSS BRACING.
   e. INSULATE ALL EXHAUST DUCTWORK 10 FEET FROM EXTERIOR OPENING.
3. DUCT FITTINGS:
   a. WHERE RECTANGULAR TEE FITTINGS ARE SHOWN, PROVIDE FITTING WITH ADJUSTABLE DIVIDER SHEET AND TURNING VANES.
   b. WHERE RECTANGULAR MAIN AND BRANCH CONNECTIONS ARE SHOWN, PROVIDE EXTRACTOR VANES. NOT APPLICABLE TO DUCTWORK DOWNSTREAM OF VAV BOXES.
   c. PROVIDE TURNING VANES IN ALL ELBOWS PER SPECS.
4. DAMPERS:
   a. IN AN ACCESSIBLE LOCATION, PROVIDE MANUAL-TYPE VOLUME BALANCING DUCT DAMPERS IN ALL SUPPLY, RETURN AND EXHAUST DUCT BRANCHES TO INDIVIDUAL GRILLES, REGISTERS AND DIFFUSERS (GRD). TO MINIMIZE NOISE INSTALL DAMPERS CLOSER TO THE BRANCH CONNECTION THAN TO THE GRD. IN DUCTWORK, PROVIDE ACCESS DOORS TO ALL DAMPERS.
   b. ABOVE INACCESSIBLE CEILINGS AND IN CASE DUCT CONFIGURATION DOES NOT ALLOW FOR INSTALLATION OF DAMPER IN DUCTWORK, PROVIDE REMOTE MANUAL DAMPER BY YOUNG REGULATOR OR EQUAL. (CABLE OPERATED SYSTEM) WITH ENGINEER'S PERMISSION CONTRACTOR MAY PROVIDE VOLUME DAMPER THAT IS INTEGRAL TO GRD.
   c. PROVIDE BALANCING DAMPERS ON ALL EXHAUST GRILLES TO ACHIEVE DESIRED AIRFLOW.
   d. PROVIDE DYNAMIC FIRE DAMPERS (RUSKIN DIDB20, TYPE B OR EQUAL) IN ACCORDANCE WITH CODE REQUIREMENT, IN ALL PENETRATIONS OF FIRE RATED WALLS, OCCUPANCY SEPARATION WALLS, BARRIERS AND PARTITIONS, AND EXIT CORRIDORS. REFER TO ARCHITECTURAL PLANS FOR RATED WALLS. PROVIDE ACCESS DOORS AS PER CODE REQUIREMENTS, EQUAL TO RUSKIN ADH-22 FOR RECTANGULAR DUCT, ACUDOR RD FOR ROUND DUCT. WHERE GRILLE ACCESS IS INDICATED, ADDITIONAL DUCT ACCESS DOOR IS NOT REQUIRED. WHERE THE CEILING IS FIRE RATED PROVIDE FIRE RATED AIR DEVICES FOR TRANSFER & RETURN AIR GRILLES AND SUPPLY AIR DIFFUSERS AS PER CODE REQUIREMENTS. REFER TO ARCHITECTURAL PLANS FOR RATED CEILINGS.
   e. PROVIDE ACCESS DOORS (NOT SHOWN IN DRAWINGS) FOR INSPECTION OF DUCT MOUNTED EQUIPMENT SUCH AS FIRE/SMOKE DAMPERS, MANUAL BALANCING DAMPERS AND TURNING VANES. IN AREAS WITH HARD CEILING COORDINATE ACCESS DOOR LOCATIONS AND CEILING ACCESS PANELS WITH OTHER TRADES.

PIPING:

1. DRAWINGS ARE DIAGRAMMATIC IN NATURE. FOR CLARITY SAKE, MOST PIPING OFFSETS/RISES/DROPS ARE NOT SHOWN IN DRAWINGS.
2. COORDINATE LOCATION OF CHILLED WATER PIPING WITH PLUMBING, ELECTRICAL AND OTHER TRADES.
3. SEAL ALL PENETRATIONS IN FIRE RATED WALLS WITH APPROVED FIRE RATED SEALANT. SEE SPECIFICATIONS. SEE ARCHITECTURAL DRAWINGS FOR FIRE WALL LOCATIONS.
4. FOR PIPE SIZES, REFER TO CHILLED WATER RISER DIAGRAM.
5. ROUTE INSULATED PIPING TIGHT AGAINST CEILING STRUCTURE AND WRAP PIPING BELOW BEAMS. CONCEAL PIPING ABOVE SUSPENDED CEILING TO EXTENT POSSIBLE. DO NOT ROUTE ANY PIPING ABOVE ELECTRICAL AND TELECOMMUNICATION ROOMS. COORDINATE LAYOUT WITH OTHER TRADES SUCH AS DUCTWORK, PLUMBING, LIGHTING, ELECTRICAL, FIRE PROTECTION, ETC. PROVIDE SHOP DRAWINGS TO CLEARLY SHOW PIPING ROUTING AND COORDINATION WITH OTHER ELEMENTS. IN CASE OF CONFLICT, COORDINATE REROUTING OF UTILITIES WITH ENGINEER AND ARCHITECT.
6. PROVIDE LINE SIZE MANUAL ISOLATION VALVES AT ALL EQUIPMENT AND AT ALL MAJOR PIPING TAKE OFFS. REFER TO PIPING RISER SCHEMATIC FOR VALVE LOCATION AND SIZES. INSTALL ISOLATION VALVES IN ACCESSIBLE LOCATIONS. PROVIDE ADEQUATELY SIZED ACCESS DOORS WHERE REQUIRED.
7. WITHIN 50' OF CONNECTION TO AHU'S, FCU'S AND OTHER POWERED VIBRATION EQUIPMENT, PROVIDE SPRING HANGER TYPE VIBRATION ISOLATORS FOR PIPING SUPPORT.
8. INSTALL ALL PIPING PENETRATING WALLS, PERPENDICULAR TO WALL. DRAWINGS INDICATE GENERAL ROUTING ONLY.
9. SLEEVE ALL EXTERIOR WALL AND GRADE BEAM PENETRATIONS. GRADE BEAM PENETRATIONS SHALL BE MADE WITHIN MIDDLE 1/3 OF VERTICAL SPAN OF BEAM.
10. PROVIDE LONG STEM CHW VALVES TO AVOID CONFLICT WITH INSULATION.

INSULATION:

1. FIBERGLASS INSULATION MAY NOT BE USED ON ANY COLD PIPING SURFACES; ONLY CLOSED CELL INSULATION IS ACCEPTABLE.
2. PROVIDE INSULATION ON ALL SURFACES CAPABLE OF CREATING CONDENSATION.

ABBREVIATIONS

A	AMPS	ENT.	ENTERING	NO	NORMALLY OPEN
ACCU	AIR COOLED CONDENSING UNIT	EXT.	EXTERNAL OR EXTERIOR	NTS	NOT TO SCALE
ACT	ACTUATOR	FCU	FAN COIL UNIT	OA	OUTSIDE AIR
AFF	ABOVE FINISHED FLOOR	FD	FIRE DAMPER	PH	PHASE
AHU	AIR HANDLING UNIT	FM	FLOW METER	RA	RETURN AIR
B.	BOTTOM	FS	FLOW SWITCH	RAG/RG	RETURN AIR GRILLE
BAS	BUILDING AUTOMATION SYSTEM	FPI	FINS PER INCH	RD	ROOF DRAIN
BOP	BOTTOM OF PIPE	G.	GROUND	RM.	ROOM
BOTT.	BOTTOM	GA.	GAGE	RPZ	REDUCED PRESSURE ZONE
C.	CONDUIT OR COMMON	GALV.	GALVANIZED	SA	SUPPLY AIR
CHR	CHILLED WATER RETURN	GPM	GALLONS PER MINUTE	SD	SUPPLY AIR DIFFUSER
CHS	CHILLED WATER SUPPLY	GRND.	GROUND	SS	STAINLESS STEEL
CHW	CHILLED WATER	HB	HOSE BIBB	SZ	SINGLE ZONE
CHWP	CHILLED WATER PUMP	HP	HORSEPOWER	TAB	TESTING & BALANCING
CR	CONDENSER WATER RETURN	HS	HUMIDITY SENSOR	T.O.L.	TOP OF LOUVER
CS	CONDENSER WATER SUPPLY	HVAC	HEATING, VENTILATION, & AIR CONDITIONING	TS	TEMPERATURE SENSOR
CLG.	CEILING OR COOLING			TSTAT	THERMOSTAT
COMB.	COMBINATION	LVG.	LEAVING	UG	UNDERGROUND
CONC.	CONCRETE	MECH	MECHANICAL	UNO	UNLESS OTHERWISE NOTED
COND.	CONDUIT	MOT. STRTR.	MOTOR STARTER	V	VOLTS
CT	COOLING TOWER	MS	MOTOR STARTER	VAV	VARIABLE AIR VOLUME
CU.	COPPER	MZ	MULTI-ZONE	VFD	VARIABLE FREQUENCY DRIVE
CW	CITY WATER	NC	NORMALLY CLOSED	W	WIRE
DDC	DIRECT DIGITAL CONTROLS				
DMPR.	DAMPER				
DISC.	DISCONNECT				
EAG/EG	EXHAUST AIR GRILLE				
EMS	ENERGY MANAGEMENT SYSTEM				

MECHANICAL SYMBOLS LEGEND

12x12	DUCT SIZE: FIRST FIGURE IS SIDE SHOWN	T	THERMOSTAT
(12x12)	BELOW DUCT SIZE: FIRST FIGURE IS SIDE SHOWN	RH	SPACE HUMIDITY SENSOR
	DIRECTION OF FLOW-RETURN	RH	DUCT HUMIDITY SENSOR
	DIRECTION OF FLOW-SUPPLY	CO	SPACE CARBON DIOXIDE SENSOR
		DP	STATIC PRESSURE SENSOR
FD	FIRE DAMPER	C	DUCT CARBON DIOXIDE SENSOR
FLEX	FLEXIBLE DUCT	CHR	CHILLED WATER RETURN
EG-X / cfm	EXHAUST AIR GRILLE	CHS	CHILLED WATER SUPPLY
		CD	CONDENSATE PIPING
RG/TG-X / cfm	RETURN AIR/TRANSFER AIR GRILLE		BUTTERFLY VALVE
SD-X / cfm	SUPPLY AIR DIFFUSER		MANUAL VALVE
	SIDE TAP WITH DAMPER		AUTOMATIC VALVE
	BACKDRAFT DAMPER		CHECK VALVE
AFR	AUTO-FLOW REGULATOR		PRESSURE GAUGE & COCK
	DRAIN VALVE	TS	TEMPERATURE SENSOR
	BALL VALVE	TW_T	THERMOMETER WELL

ethos engineering
119 W. VAN BUREN AVE. STE.101
HARLINGEN, TX
PHONE: 956-230-3435
TEXAS REGISTERED
ENGINEERING FIRM
F-15998

No.	REVISIONS	BY

GMS ARCHITECTS
1150 Paredes Line Rd.
Brownsville TX 78526
(956) 546-0110
fax (956) 546-0196

BISD Hanna ECHS
Gymnasium Facility

CESAR A. GONZALEZ
108611
06.12.2019

© Copyright 2019
Gomez Mendez Saenz Inc.
Architects-Planners
Interior Designers

Date: June 12, 2019
Scale: As Noted
Project Architect: David Monreal, AIA
Drawn By: ETHOS
Job No.: BISD Hanna Gymnasium
Sheet:

M2.01

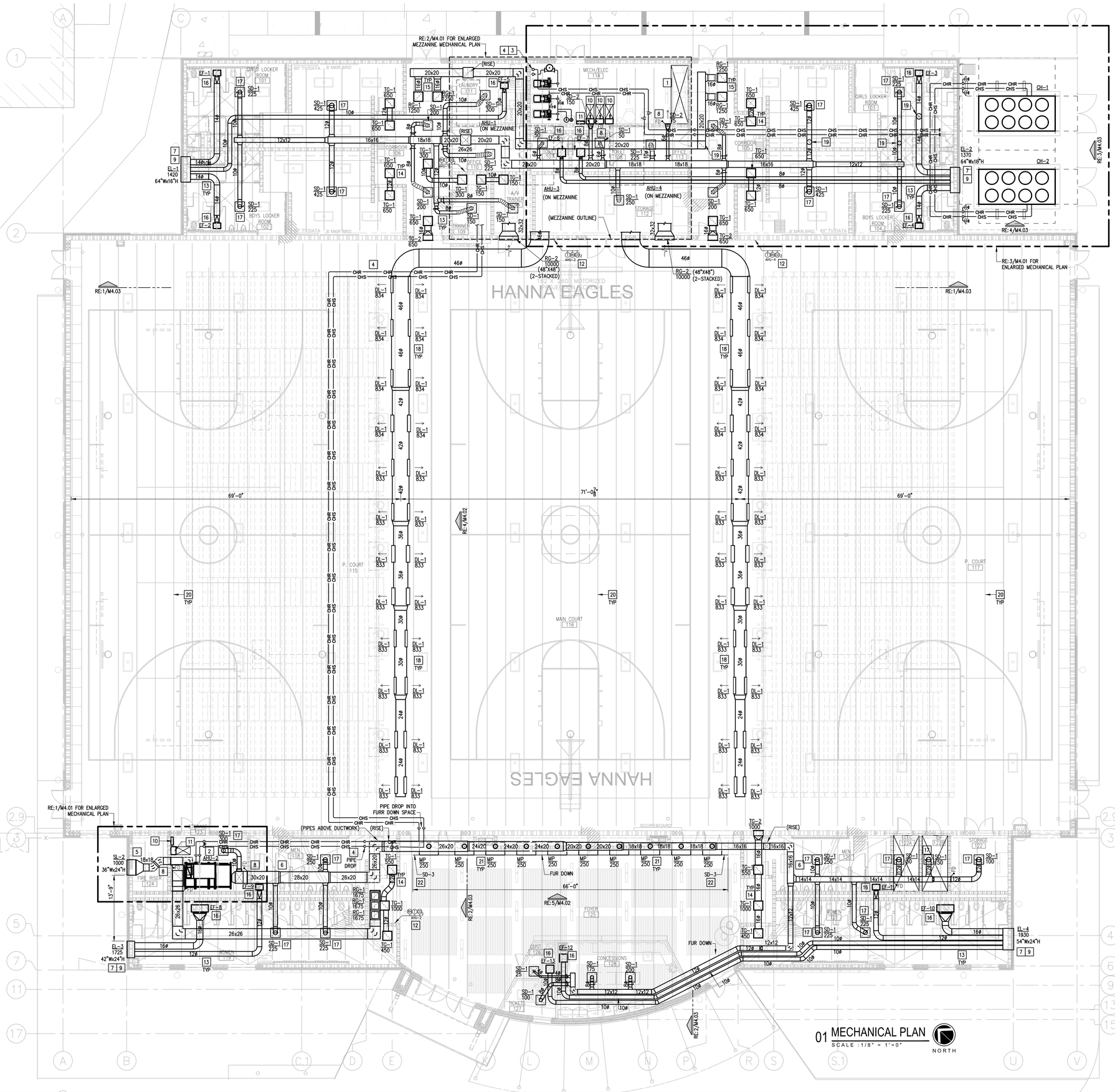

01 MECHANICAL PLAN

SCALE : 1/8" = 1'=0"

NORTH

MECHANICAL GENERAL NOTES:

1. PRIOR TO LABELING EQUIPMENT, COORDINATE DESIGNATION AND IDENTIFICATION WITH OWNER AND BUILDING AUTOMATION SYSTEM.

MECHANICAL KEYED NOTES:

1. CODE AND WORKING CLEARANCE FOR ELECTRICAL PANELS. DO NOT ROUTE DUCT OR PIPING DIRECTLY ABOVE ELECTRICAL EQUIPMENT FOOTPRINT. SEE ELECTRICAL PLANS FOR EXACT LOCATION. (TYP.)
2. PROVIDE CENTRAL STATION AIR HANDLING UNIT AS SCHEDULED. PROVIDE 6" HOUSEKEEPING PAD PER DETAIL SHEET. PAD SHALL BE MINIMUM 6" LARGER THAN EQUIPMENT FOOTPRINT ON ALL SIDES. ROUTE COPPER CONDENSATE LINE TO PLUMBING RECEPTACLE AND INSULATE PER SPECIFICATIONS. DROP CHW LINES NEXT TO UNIT TO AVOID INTERFERENCE WITH MAINTENANCE ACCESS. POSITION UNIT TO ALLOW REQUIRED CLEARANCES, AND ALIGN TO MINIMIZE DUCTWORK TRANSITIONS BETWEEN UNIT OPENINGS AND TRUNK DUCTS. REFER TO AHUS VIEWS AND ELEVATIONS. COORDINATE UNIT DIMENSIONS, ORIENTATION, CONFIGURATION, AND CONNECTION LOCATIONS PRIOR TO ORDERING.
3. RISE WITH CHILLED WATER PIPING UP TO MEZZANINE AT THIS APPROXIMATE LOCATION.
4. INSTALL CHW LINES AS HIGH AS POSSIBLE TO AVOID CONFLICT WITH DUCTWORK. PROVIDE CORROSION RESISTANT COATING ON CHW LINES PRIOR TO INSULATING THEM. SEE SPECIFICATIONS.
5. ROUTE OUTSIDE AIR DUCT TO INTAKE CONNECTION AT AHU. ROUTE DUCT AS HIGH AS POSSIBLE. INSULATE WITH 2" DUCT WRAP. PROVIDE MANUAL VOLUME DAMPER.
6. DUCTWORK ROUTING SHOWN IS DIAGRAMMATIC IN NATURE. FIELD-VERIFY STRUCTURE AND SPACE AVAILABILITY PRIOR TO SUBMITTING SHOP DRAWINGS. COORDINATE WITH ARCHITECT AND ENGINEER IN CASE OF CONFLICTS. (TYP.)
7. SLEEVE ALL WALL PENETRATIONS PER SPECIFICATIONS. SEAL AROUND DUCTS & PIPING AT ALL WALLS, AC ROOMS AND WALL LOUVER PENETRATIONS WITH FIRE-PROOF CAULKING. PROVIDE ESCUTCHEON PLATES AND FLASHING AROUND PENETRATION, BOTH INSIDE AND OUTSIDE TO PROVIDE A FINISH LOOK. (TYP.)
8. PROVIDE 1-1/2 HOUR RATING, DYNAMIC FIRE DAMPER EQUAL TO RUSKIN DIBD2 AND DUCT ACCESS DOOR EQUAL TO RUSKIN ADH-22 FOR RECTANGULAR DUCT, ACUDOR RD FOR ROUND DUCT. (TYPICAL). PROVIDE FIRE DAMPER AT WALL PENETRATIONS AS SHOWN.: ACCESS PANEL SHALL BE IN CEILING SPACE.
9. PROVIDE LOUVER AS SCHEDULED. COORDINATE FINAL FINISH, SIZE AND LOCATION WITH ARCHITECT PRIOR TO ORDERING. (TYP.)
10. LOCATE DDC PANEL AT THIS APPROXIMATE LOCATION. REFER TO SPECIFICATION FOR DDC CONTROLS AND SEQUENCES OF OPERATION. COORDINATE PROVISION OF DDC SENSORS IN RETURN AIR INTAKE CABINET OF AIR HANDLING UNIT. COORDINATE WITH CONTROLS CONTRACTOR.
11. PROVIDE VFD PER SCHEDULE WITH NEMA-1 ENCLOSURE FOR MOUNTING INDOORS. MAINTAIN MINIMUM 3'-0" CLEARANCE IN FRONT OF VFD. (TYPICAL)
12. PROVIDE TEMPERATURE, RELATIVE HUMIDITY, AND CO2 SENSORS AS PER SPECIFICATIONS AND WHERE INDICATED. INSTALL 48" A.F.F. COORDINATE WITH ARCHITECT AND OWNER TO MEET ADA REQUIREMENTS. PROVIDE CLEAR LOCKING COVER FOR ALL SENSORS (HEAVY DUTY TYPE FOR SENSORS LOCATED IN THE PLAY AREA).
13. PROVIDE ROUND SPIRAL LOCK-SEAM DUCT. LONGITUDINAL SEAM TYPE IS NOT ACCEPTABLE. (TYPICAL)
14. PROVIDE ACOUSTICAL LINING FOR TRANSFER DUCT. SEE SPECIFICATIONS. (TYPICAL)
15. PROVIDE FABRICATED RETURN AIR PLENUM BOX ABOVE RETURN GRILLE. INSTALL ACOUSTICAL LINING IN PLENUM BOX. CONNECT WITH FLEX DUCT TO MAIN RETURN TRUNK DUCT WHERE SHOWN ON DRAWING AND INSTALL BALANCING DAMPER WHERE INDICATED. FOR AREAS WHERE FLEX DUCT IS NOT SHOWN, PROVIDE ACOUSTICAL LINING FOR CONNECTION TO MAIN RETURN TRUNK DUCT. SEE DETAIL SHEET. (TYPICAL)
16. PROVIDE EXHAUST FAN AS SCHEDULED. SEE ASSOCIATED DETAIL ON DETAIL SHEET.
17. PROVIDE ROUND NECK OPPOSED BLADE BALANCING DAMPER TITUS MODEL AG-75 OR APPROVED EQUAL FOR VOLUME CONTROL IN ROUND NECK DIFFUSER. DAMPER SHALL BE OPERABLE THRU THE FACE OF THE DIFFUSER. TYPICAL ON SQUARE DIFFUSERS LOCATED IN HARD CEILING AREAS.
18. PROVIDE DOUBLE WALL EXPOSED-PAINTED ROUND DUCT AS PER SPECIFICATIONS WITH DIFFUSERS AS SCHEDULED. PROVIDE HIGH PERFORMANCE PAINT AND COORDINATE FINAL COLOR OF DUCTS AND DIFFUSERS WITH ARCHITECT BEFORE ORDERING AND INSTALLING. ALL EXPOSED DUCTS SHALL BE PAINTED. COORDINATE FINISH AND COLOR WITH ARCHITECT.
19. ROUTE DUCT UP BETWEEN JOISTS TO AVOID CONFLICT WITH CHILLED WATER PIPING.
20. STRUCTURAL ROOF JOIST AT THIS LOCATION. TYPICAL.
21. PROVIDE CABLE OPERATED BALANCING DAMPER. TYPICAL FOR ALL LINEAR DIFFUSERS (SD-3) OPERABLE THRU FACE OF THE DIFFUSER. SEE DETAIL ON DETAIL SHEET.
22. PROVIDE NEW LINEAR DIFFUSERS AS SCHEDULED. DIFFUSERS SHALL HAVE CONTINUOUS LOOK WITH LENGTH AS SHOWN FOR AESTHETICS PURPOSES. PROVIDE FIELD FABRICATED PLENUM BOX BEHIND AIR DEVICE.

No.	REVISIONS	BY

GMS ARCHITECTS
1150 Paredes Line Rd.
Brownsville TX 78526
(956) 546-0110
fax (956) 546-0196

BISD Hanna ECHS
Gymnasium Facility

CESAR A. GONZALEZ
108611
06.12.2019

© Copyright 2019
Gomez Mendez Saenz Inc.
Architects-Planners
Interior Designers

Date: June 12, 2019
Scale: As Noted
Project Architect: David Monreal, AIA
Drawn By: ETHOS
Job No.: BISD Hanna Gymnasium
Sheet: M3.01

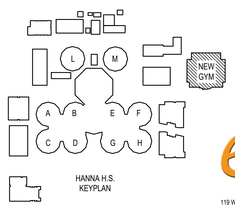

HANNA H.S.
KEYPLAN

ethos engineering
119 W. VAN BUREN AVE. STE:101
HARLINGEN, TX
PHONE: 956-230-3435
TEXAS REGISTERED
ENGINEERING FIRM
F-15998

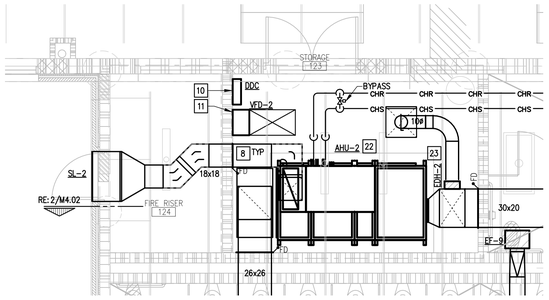

01 ENLARGED MECHANICAL PLAN
SCALE : 1/4" = 1'=0"
NORTH

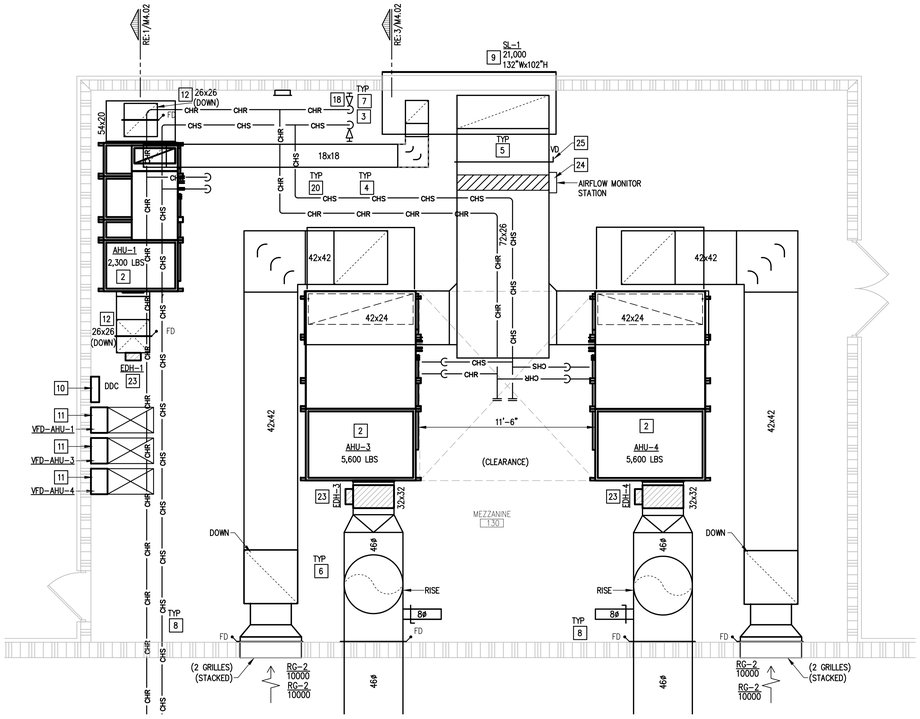

02 ENLARGED MEZZANINE MECHANICAL PLAN
SCALE : 1/4" = 1'=0"
NORTH

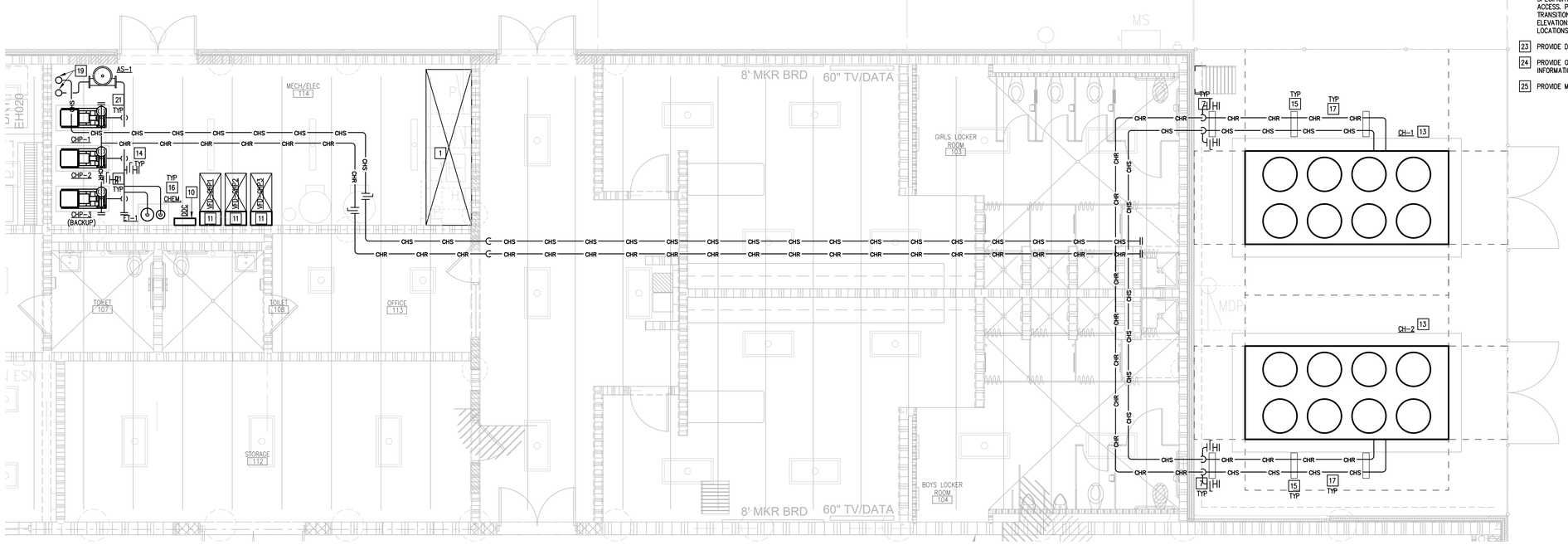

03 ENLARGED MEZZANINE MECHANICAL PLAN
SCALE : 1/4" = 1'=0"
NORTH

MECHANICAL GENERAL NOTES:

1. PRIOR TO LABELING EQUIPMENT, COORDINATE DESIGNATION AND IDENTIFICATION WITH OWNER AND BUILDING AUTOMATION SYSTEM.

MECHANICAL KEYED NOTES:

1. CODE AND WORKING CLEARANCE FOR ELECTRICAL PANELS. DO NOT ROUTE DUCT OR PIPING DIRECTLY ABOVE ELECTRICAL EQUIPMENT FOOTPRINT. SEE ELECTRICAL PLANS FOR EXACT LOCATION. (TYP.)
2. PROVIDE CENTRAL STATION AIR HANDLING UNIT AS SCHEDULED. MOUNT UNIT ON STRUCTURAL BASE AND PROVIDE AUXILIARY DRAIN PAN. ROUTE COPPER CONDENSATE LINE TO PLUMBING RECEPTACLE AND INSULATE PER SPECIFICATIONS. DROP CHW LINES NEXT TO UNIT TO AVOID INTERFERENCE WITH MAINTENANCE ACCESS. POSITION UNIT TO ALLOW REQUIRED CLEARANCES, AND ALIGN TO MINIMIZE DUCTWORK TRANSITIONS BETWEEN UNIT OPENINGS AND TRUNK DUCTS. REFER TO AHUS VIEWS AND ELEVATIONS. COORDINATE UNIT DIMENSIONS, ORIENTATION, CONFIGURATION, AND CONNECTION LOCATIONS PRIOR TO ORDERING.
3. RISE WITH CHILLED WATER PIPING AT THIS APPROXIMATE LOCATION FROM MECHANICAL ROOM BELOW.
4. INSTALL CHW LINES AS HIGH AS POSSIBLE TO AVOID CONFLICT WITH DUCTWORK. PROVIDE CORROSION RESISTANT COATING ON CHW LINES PRIOR TO INSULATING THEM. SEE SPECIFICATIONS.
5. ROUTE OUTSIDE AIR DUCT TO INTAKE CONNECTION AT AHU. ROUTE DUCT AS HIGH AS POSSIBLE. INSULATE WITH 2" DUCT WRAP. PROVIDE MANUAL VOLUME DAMPER.
6. DUCTWORK ROUTING SHOWN IS DIAGRAMMATIC IN NATURE. FIELD-VERIFY STRUCTURE AND SPACE AVAILABILITY PRIOR TO SUBMITTING SHOP DRAWINGS. COORDINATE WITH ARCHITECT AND ENGINEER IN CASE OF CONFLICTS. (TYP.)
7. SLEEVE ALL WALL PENETRATIONS PER SPECIFICATIONS. SEAL AROUND DUCTS & PIPING AT ALL WALLS, AC ROOMS AND WALL LOUVER PENETRATIONS WITH FIRE-PROOF CAULKING. PROVIDE ESCUTCHEON PLATES AND FLASHING AROUND PENETRATION, BOTH INSIDE AND OUTSIDE TO PROVIDE A FINISH LOOK. (TYP.)
8. PROVIDE 1-1/2 HOUR RATING, DYNAMIC FIRE DAMPER EQUAL TO RUSKIN DIBD2 AND DUCT ACCESS DOOR EQUAL TO RUSKIN ADH-22 FOR RECTANGULAR DUCT, ACUDOR RD FOR ROUND DUCT. (TYPICAL). PROVIDE FIRE DAMPER AT WALL PENETRATIONS AS SHOWN.: ACCESS PANEL SHALL BE IN CEILING SPACE.
9. PROVIDE LOUVER AS SCHEDULED. COORDINATE FINAL FINISH, SIZE AND LOCATION WITH ARCHITECT PRIOR TO ORDERING. (TYP.)
10. LOCATE DDC PANEL AT THIS APPROXIMATE LOCATION. REFER TO SPECIFICATION FOR DDC CONTROLS AND SEQUENCES OF OPERATION. COORDINATE PROVISION OF DDC SENSORS IN RETURN AIR INTAKE CABINET OF AIR HANDLING UNIT. COORDINATE WITH CONTROLS CONTRACTOR.
11. PROVIDE VFD PER SCHEDULE WITH NEMA-1 ENCLOSURE FOR MOUNTING INDOORS. MAINTAIN MINIMUM 3'-0" CLEARANCE IN FRONT OF VFD. (TYPICAL)
12. ROUTE DUCTWORK DOWN TO CEILING SPACE BELOW MEZZANINE FLOOR. COORDINATE FLOOR PENETRATION AND ROUTING WITH GENERAL CONTRACTOR.
13. PROVIDE AIR COOLED CHILLER AS PER SCHEDULE AND SPECIFICATIONS. PROVIDE 6" CONCRETE PAD. PAD SHALL BE 12" LARGER ON ALL SIDES. RE: TO STRUCTURAL DRAWINGS FOR CHILLER FOUNDATION DETAILS.
14. PROVIDE PUMPS, AIR SEPARATOR, EXPANSION TANK, AND CHEMICAL POT FEEDER ON 4" CONCRETE PADS. PAD SHALL BE 4" LARGER ON ALL SIDES FOR ALL EQUIPMENT EXCEPT CHILLER. REFER TO STRUCTURAL DRAWINGS.
15. PIPE SUPPORTS AND STANCHIONS SHALL BE HOT DIPPED GALVANIZED AND PAINTED. BASE PLATE SHALL BE INSTALLED ON A 4" CONCRETE PAD. REFER TO DETAIL SHEET.
16. PROVIDE HYDRONIC PIPING WITH THERMOWELLS, PRESSURE GAUGES, THERMOMETERS, FLOW SWITCHES, MANUAL VALVES, ETC. PROVIDE PIPING SPECIALTIES SUCH AS AIR SEPARATOR, EXPANSION TANK, MAKE UP WATER, CHEMICAL FEEDER, ETC. SEE PIPING SCHEMATIC AND ASSOCIATED DETAILS. PROVIDE HOUSEKEEPING CONCRETE PAD.
17. PROVIDE ALUMINUM METAL JACKETING WITH APPROPRIATE IDENTIFICATION FOR ALL EXPOSED CHW PIPING. SEE SPECIFICATIONS.
18. PROVIDE ISOLATION VALVES WITHIN MECHANICAL ROOM.
19. RISE WITH CHILLED WATER PIPING UP TO MEZZANINE AT THIS APPROXIMATE LOCATION.
20. RUN CHILLED WATER PIPING HIGH BETWEEN ROOF JOISTS TO MAINTAIN MAXIMUM HEAD CLEARANCE.
21. PROVIDE PUMPS ON VIBRATION ISOLATING INERTIA BASES.
22. PROVIDE CENTRAL STATION AIR HANDLING UNIT AS SCHEDULED. PROVIDE 6" HOUSEKEEPING PAD PER DETAIL SHEET. PAD SHALL BE MINIMUM 6" LARGER THAN EQUIPMENT FOOTPRINT ON ALL SIDES. ROUTE COPPER CONDENSATE LINE TO PLUMBING RECEPTACLE AND INSULATE PER SPECIFICATIONS. DROP CHW LINES NEXT TO UNIT TO AVOID INTERFERENCE WITH MAINTENANCE ACCESS. POSITION UNIT TO ALLOW REQUIRED CLEARANCES, AND ALIGN TO MINIMIZE DUCTWORK TRANSITIONS BETWEEN UNIT OPENINGS AND TRUNK DUCTS. REFER TO AHUS VIEWS AND ELEVATIONS. COORDINATE UNIT DIMENSIONS, ORIENTATION, CONFIGURATION, AND CONNECTION LOCATIONS PRIOR TO ORDERING.
23. PROVIDE DUCT HEATER AS SCHEDULED.
24. PROVIDE OUTSIDE AIR MONITORING STATION AS SHOWN. REFER TO SPECIFICATIONS FOR MORE INFORMATION.
25. PROVIDE MANUAL BALANCING AIR DAMPER AT OUTSIDE AIR DUCTS AS SHOWN.

No.	REVISIONS	BY

GMS ARCHITECTS
1150 Paredes Line Rd.
Brownsville TX 78526
(956) 546-0110
fax (956) 546-0196

BISD Hanna ECHS
Gymnasium Facility

STATE OF TEXAS
CESAR A. GONZALEZ
108611
LICENSED PROFESSIONAL ENGINEER
06.12.2019

© Copyright 2019
Gomez Mendez Saenz Inc.
Architects-Planners
Interior Designers

Date:	June 12, 2019
Scale:	As Noted
Project Architect:	David Monreal, AIA
Drawn By:	ETHOS
Job No:	BISD Hanna Gymnasium
Sheet:	M4.01

ethos engineering
119 W. VAN BUREN AVE. STE.101
HARLINGEN, TX
PHONE: 956-230-3435
TEXAS REGISTERED
ENGINEERING FIRM
F-15998

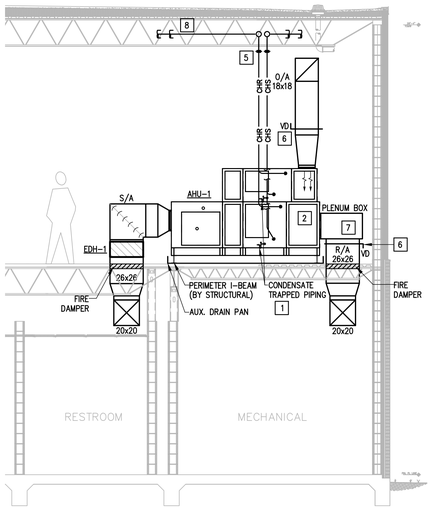

01 AHU-1 MECHANICAL ELEVATION
SCALE : 1/4" = 1'=0"

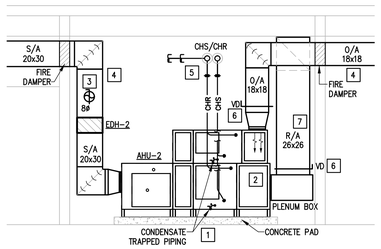

02 AHU-2 MECHANICAL ELEVATION
SCALE : 1/4" = 1'=0"

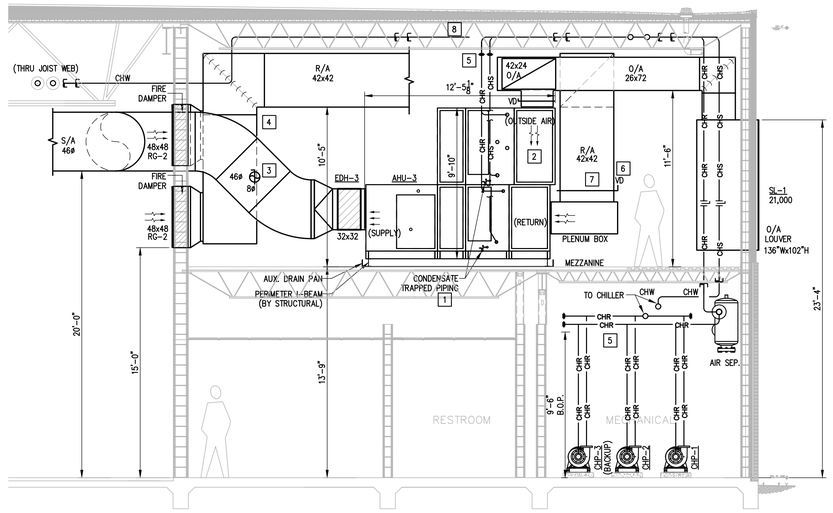

03 AHU-3 (AHU-4 SIMILAR) MECHANICAL ELEVATION
SCALE : 1/4" = 1'=0"

KEYED NOTES:

1. SYMBOL IS DIAGRAMMATIC. COORDINATE CONDENSATE TRAP SIZE AND DEPTH WITH AHU SUPPLIER. PROVIDE INSULATED COPPER CONDENSATE DRAIN LINE ON UNISTRUT SLEEPERS, AND ROUTE LINE TO DRAIN RECEPTOR. PROVIDE INSULATION. PROVIDE COPPER TUBING FROM AIR VENT DISCHARGE TO DRAIN.
2. MOTORIZED OUTSIDE AIR AND RETURN AIR DAMPERS IN AHU BY MANUFACTURER.
3. PROVIDE INSULATED ROUND DUCT AS SHOWN WITH VOLUME DAMPER TO SERVE MECH. ROOM.
4. DUCTWORK ROUTING SHOWN IS DIAGRAMMATIC IN NATURE. FIELD-VERIFY STRUCTURE AND SPACE AVAILABILITY PRIOR TO SUBMITTING SHOP DRAWINGS. COORDINATE WITH ARCHITECT AND ENGINEER IN CASE OF CONFLICTS. (TYPICAL)
5. OPTIMIZE ROUTING OF CHILLED WATER PIPING AND COIL CONNECTIONS TO PREVENT BLOCKAGE OF AHU'S ACCESS DOORS. ACCESS DOORS SHALL HAVE A CLEAR SWING FOR SERVICE. ALL FITTINGS, VALVES, AND ACCESSORIES. SEE ASSOCIATED DETAIL ON DETAIL SHEET.(TYPICAL)
6. MANUAL VOLUME DAMPER MOUNTED IN RETURN AIR AND OUTSIDE AIR DUCTS.
7. SMOKE DETECTOR TO BE INSTALLED AT RETURN AIR DUCT OF AIR HANDLING UNIT. RE: ELECTRICAL.
8. INSTALL CHW LINES AS HIGH AS POSSIBLE TO AVOID CONFLICT WITH DUCTWORK. PROVIDE CORROSION RESISTANT COATING ON CHW LINES PRIOR TO INSULATING THEM. SEE SPECIFICATIONS.

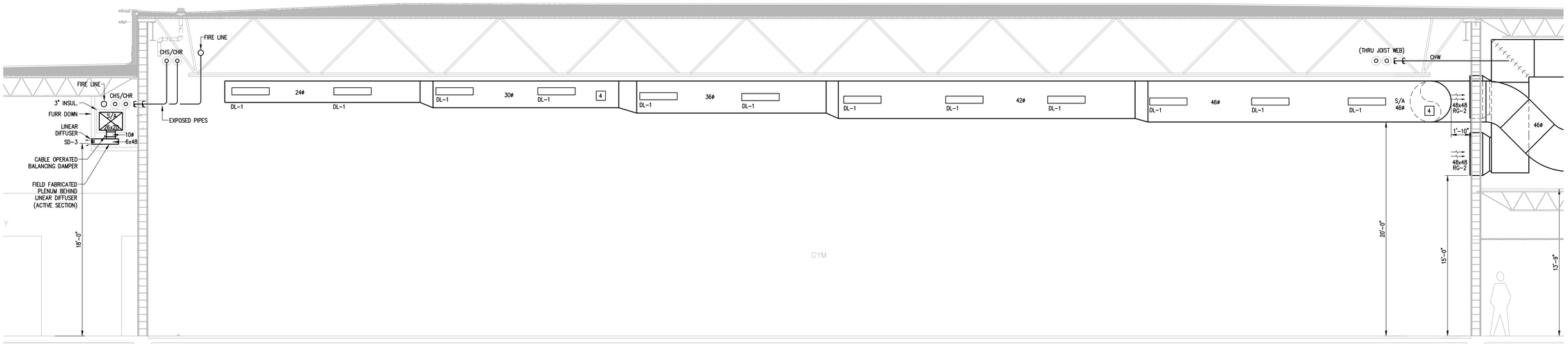

04 GYMNASIUM MECHANICAL ELEVATION
SCALE : 1/4" = 1'=0"

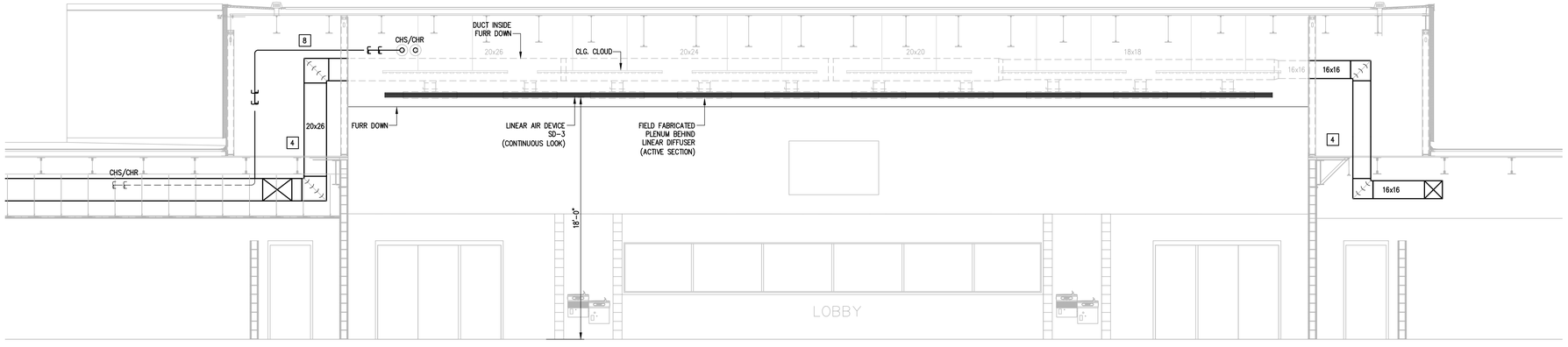

05 LOBBY MECHANICAL ELEVATION
SCALE : 1/4" = 1'=0"

No.	REVISIONS	BY

GMS ARCHITECTS
1150 Paredes Line Rd.
Brownsville TX 78526
(956) 546-0110
fax (956) 546-0196

BISD Hanna ECHS
Gymnasium Facility

CESAR A. GONZALEZ
108611
06.12.2019

© Copyright 2019
Gomez Mendez Saenz Inc.
Architects-Planners
Interior Designers

Date: June 12, 2019
Scale: As Noted
Project Architect: David Monreal, AIA
Drawn By: ETHOS
Job No: BISD Hanna Gymnasium
Sheet: M4.02

ethos engineering
119 W. VAN BUREN AVE. STE:101
HARLINGEN, TX
PHONE: 956-230-3435
TEXAS REGISTERED
ENGINEERING FIRM
F-15998

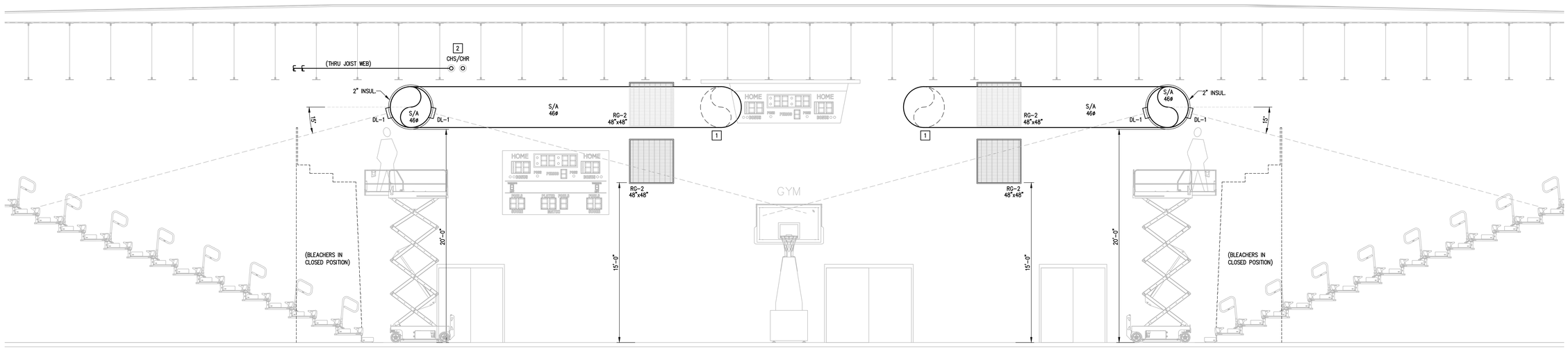

01 GYMNASIUM MECHANICAL ELEVATION

SCALE : 1/4" = 1'=0"

KEYED NOTES:

1. DUCTWORK ROUTING SHOWN IS DIAGRAMMATIC IN NATURE. FIELD-VERIFY STRUCTURE AND SPACE AVAILABILITY PRIOR TO SUBMITTING SHOP DRAWINGS. COORDINATE WITH ARCHITECT AND ENGINEER IN CASE OF CONFLICTS. (TYPICAL)
2. INSTALL CHW LINES AS HIGH AS POSSIBLE TO AVOID CONFLICT WITH DUCTWORK. PROVIDE CORROSION RESISTANT COATING ON CHW LINES PRIOR TO INSULATING THEM. SEE SPECIFICATIONS.

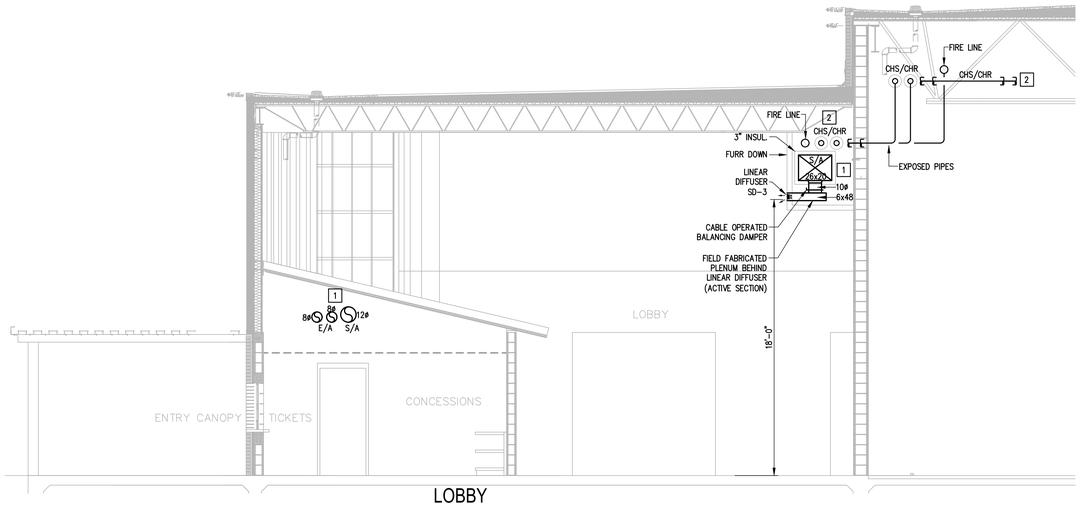

02 LOBBY MECHANICAL ELEVATION

SCALE : 1/4" = 1'=0"

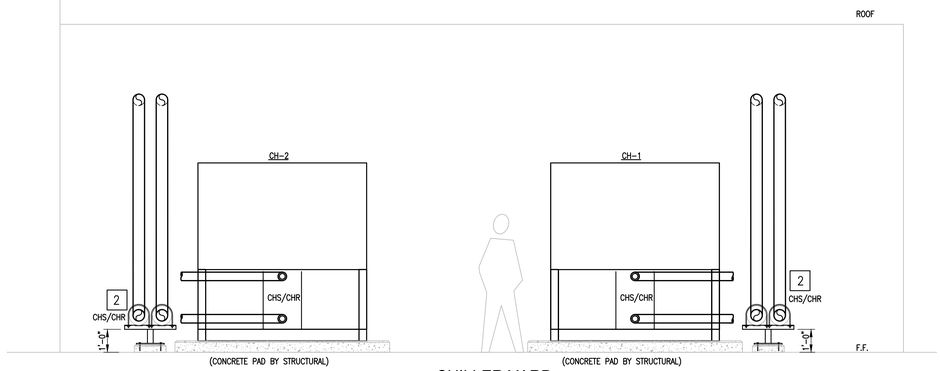

03 CHILLER YARD MECHANICAL ELEVATION

SCALE : 3/8" = 1'=0"

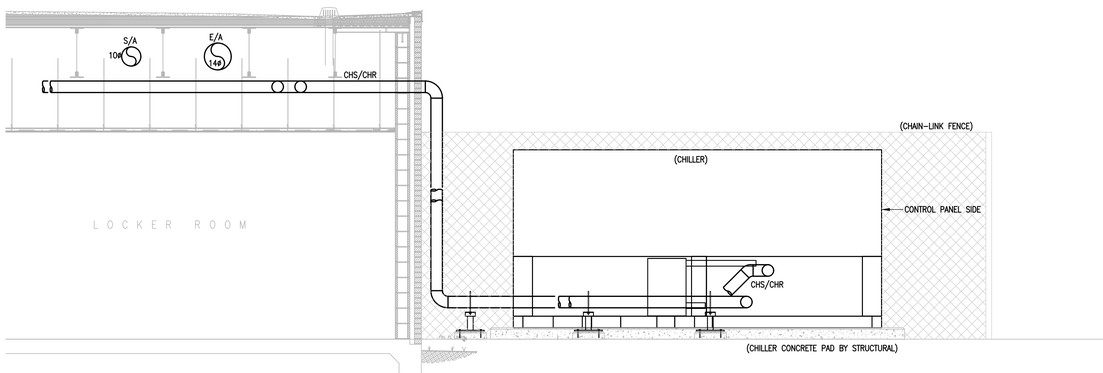

04 CHILLER YARD MECHANICAL ELEVATION

SCALE : 3/8" = 1'=0"

No.	REVISIONS	BY

GMS ARCHITECTS
1150 Paredes Line Rd.
Brownsville TX 78526
(956) 546-0110
fax (956) 546-0196

BISD Hanna ECHS
Gymnasium Facility

CESAR A. GONZALEZ
108611
06.12.2019

© Copyright 2019
Gomez Mendez Saenz Inc.
Architects-Planners
Interior Designers

Date: June 12, 2019
Scale: As Noted
Project Architect: David Monreal, AIA
Drawn By: ETHOS
Job No.: BISD Hanna Gymnasium
Sheet: M4.03

ethos engineering
119 W. VAN BUREN AVE. STE:101
HARLINGEN, TX
PHONE: 956-230-3435
TEXAS REGISTERED
ENGINEERING FIRM
F-15998

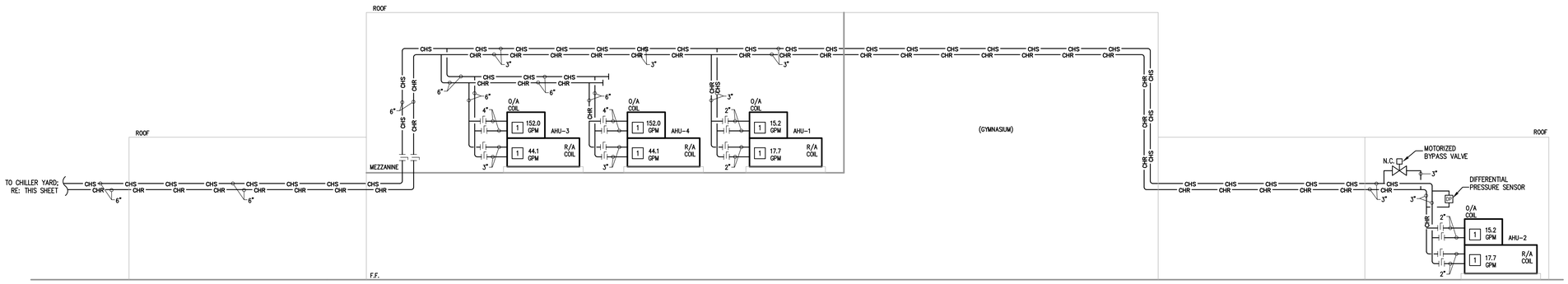

1 CHILLED WATER PIPING SCHEMATIC DIAGRAM

SCALE: NOT TO SCALE

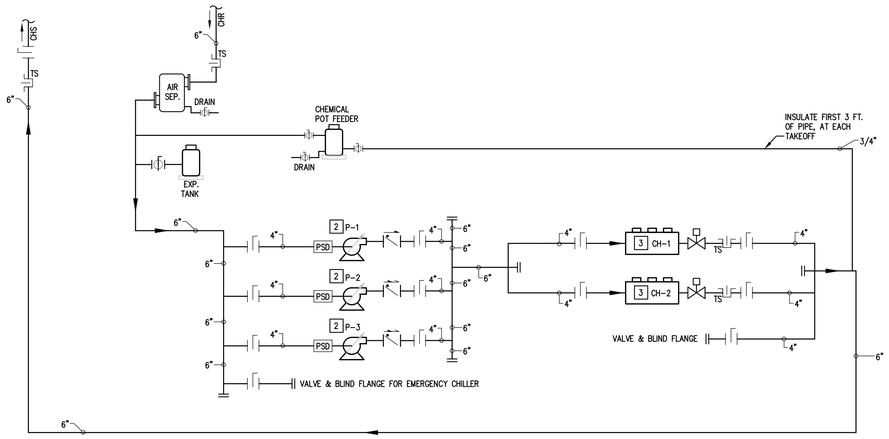

2 CENTRAL PLANT - CHILLED WATER PIPING SCHEMATIC DIAGRAM

SCALE: NOT TO SCALE

NOTES:

1. PROVIDE MULTIPLE REDUCERS (2-1/2" TO 3", 3" TO 4") AT SUCTION AND DISCHARGE OF PUMPS. ALL VALVES, SUCTION DIFFUSERS, ETC. SHALL BE LINE SIZE. SINGLE PIPE REDUCER WITH FLOW STRAIGHTENING VANES WILL BE ACCEPTED (METRAFLEX OR EQUAL).
2. TEMPERATURE AND PRESSURE GAGES AND PT TEST PORTS ARE NOT SHOWN ON PIPING SCHEMATICS. SEE CONNECTION DETAILS FOR REQUIREMENTS.

GENERAL NOTES:

1. ALL PIPING WELDS MUST BE WIRE-BRUSHED AND PAINTED A MINIMUM OF 12" ON EITHER SIDE OF WELD PRIOR TO INSULATION.
2. CLEAN AND PREPARE SURFACE OF CHILLED WATER PIPING BEFORE INSULATING. APPLY CORROSION COATING TO ALL PIPING. REFER TO SPECIFICATIONS FOR MORE INFORMATION.
3. INSULATE PER SPECIFICATIONS ALL PIPING, VALVES, FITTINGS, PUMP BODIES AND COLD SURFACES THAT ARE CAPABLE OF GENERATING CONDENSATION. FIBERGLASS INSULATION WILL NOT BE ALLOWED.
4. PRIOR TO INSTALLATION OF EQUIPMENT, VERIFY THAT MANUFACTURER RECOMMENDED AND CODE REQUIRED CLEARANCES ARE AVAILABLE.
5. INSTALL PIPES AND DUCTS AS HIGH AS POSSIBLE TO ALLOW MAXIMUM POSSIBLE HEADROOM. MIN. 9' AFF.
6. PROVIDE P/T TEST PORT WITHIN 6 INCHES OF EVERY PRESSURE GAGE AND THERMOWELL. SEE PIPING SCHEMATIC FOR LOCATIONS.
7. REFER TO HYDRONIC PIPING SCHEMATICS FOR DETAILS.
8. FOR ALL PIPING SUPPORTS LOCATED OUTDOORS, PROVIDE THE FOLLOWING:
   - A) POLYAMIDE PRIME COAT OF DEVOE PAINTS, DEVRAN 201.
   - B) INTERMEDIATE TOP COAT OF DEVOE PAINTS, DEVRAN 224HS.
   - C) TOP COAT OF DEVOE PAINTS, DEVTHANE 379.
9. GPM's ARE SHOWN FOR VERIFICATION PURPOSE ONLY. DO NOT USE THIS DATA FOR TAB. IN CASE OF CONFLICT, OR IF FLOW DATA DO NOT MATCH WITH THOSE FOR SCHEDULED EQUIPMENT, USE LARGER OF THE TWO.
10. REFER TO SPECIFICATIONS FOR CONTROL COMPONENTS, DEVICES, AND SENSORS TO BE COORDINATED WITH MECHANICAL WORK.
11. AT LOWEST POINT IN PIPING ENTERING CHILLER BARRELS, PROVIDE 6" LONG DRAIN NIPPLES AND BALL VALVES FOR DRAINING CHILLER.

KEYED NOTES:

1. PROVIDE 2-WAY CONTROL VALVE AT AHU. REFER TO CHILLED WATER COIL CONNECTION SCHEMATIC WITH 2-WAY VALVE ON DETAIL SHEET.
2. REFER TO END SUCTION PUMP DETAIL ON DETAIL SHEET.
3. REFER TO CHILLER CHILLED WATER PIPING DETAIL ON DETAIL SHEET.

LEGEND:

- AS — AIR SEPARATOR
- AUTOMATIC VALVE
- MANUAL VALVE
- PS — PRESSURE SENSOR
- STRAINER
- F — FLOW METER
- PSD — PUMP SUCTION DIFFUSER
- BALL VALVE
- M — WATER METER
- BLIND FLANGE
- PUMP
- PUMP WITH VFD
- PRESSURE VALVE
- NEW EQUIPMENT
- NEW PIPING
- TS — THERMOWELL FOR DDC TEMPERATURE SENSOR
- FS — FLOW SWITCH
- CHECK VALVE

ethos engineering
119 W. VAN BUREN AVE. STE.101
HARLINGEN, TX
PHONE: 956-230-3435
TEXAS REGISTERED ENGINEERING FIRM F-15998

No.	REVISIONS	BY

GMS ARCHITECTS
1150 Paredes Line Rd.
Brownsville TX 78526
(956) 546-0110
fax (956) 546-0196

BISD Hanna ECHS Gymnasium Facility

CESAR A. GONZALEZ 108611 06.12.2019

© Copyright 2019
Gomez Mendez Saenz Inc.
Architects-Planners
Interior Designers

Date: June 12, 2019
Scale: As Noted
Project Architect: David Monreal, AIA
Drawn By: ETHOS
Job No. BISD Hanna Gymnasium
Sheet: M5.01

PUMP SCHEDULE

MARK	LOCATION	QTY	TYPE	MANUFACTURER & MODEL NUMBER	GPM	HEAD (FT)	MIN. HP	MIN. EFF.	RPM	ELECTRICAL	NOTES
CHP-1, 2	PUMP ROOM	2	END SUCTION	BELL & GOSSETT E1510-2EB	240	100	10	70.6%	1,750	480V / 3PH / 60HZ	ALL
CHP-3 BACKUP	PUMP ROOM	1	END SUCTION	BELL & GOSSETT E1510-2EB	240	100	10	70.6%	1,750	480V / 3PH / 60HZ	ALL

NOTES:
1. PROVIDE NON-OVERLOADING, PREMIUM EFFICIENCY, TEFC MOTORS, RATED FOR VFD DUTY.
2. PROVIDE COUPLINGS RATED FOR VFD DUTY. FALK T31 SPACER TYPE.
3. FACTORY REPRESENTATIVE SHALL FIELD-VERIFY PUMP ALIGNMENT WITH LASER ALIGNMENT TOOLS.
4. PROVIDE SUCTION DIFFUSERS AND SHAFT GROUNDING ON MOTORS.
5. PROVIDE PUMP AND MOTOR COATING/PAINT RATED FOR EXTERIOR INSTALLATION IN CORROSIVE ENVIRONMENT.
6. PROVIDE SPRING TYPE VIBRATION ISOLATION INERTIA BASE.

EXPANSION TANK SCHEDULE

MARK	SERVICE	TYPE	ACCEPTANCE VOLUME GALLONS	(DIAMETER) X (HEIGHT)	LOCATION	MANUFACTURER & MODEL NUMBER OR EQUAL	NOTES
ET-1	CHILLED WATER	VERTICAL FLOOR MOUNT BLADDER	53	24"x37"	PUMP ROOM	BELL AND GOSSETT B-200	ALL

NOTES:
1. PROVIDE LINE SIZE AIR SEPARATOR, BELL AND GOSSETT ROLAIRTROL RL-6F FOR 6" CONNECTION.

ELECTRIC DUCT HEATER SCHEDULE

MARK	UNIT TYPE	DUCT SIZE (INCHES)	TOTAL (HALF) CFM	SERVES	KW	STG.	ELECT. V/PH/HZ	NOTES	MANUFACTURER MODEL NUMBER
EDH-1	DUCT MOUNTED	26X26	5000 (2500)	AHU-1	25	SCR	480/3/60	ALL	WARREN CBK
EDH-2	DUCT MOUNTED	30X20	5000 (2500)	AHU-2	25	SCR	480/3/60	ALL	WARREN CBK
EDH-3	DUCT MOUNTED	32X32	20000 (10000)	AHU-3	90	SCR	480/3/60	ALL	WARREN CBK
EDH-4	DUCT MOUNTED	32X32	20000 (10000)	AHU-4	90	SCR	480/3/60	ALL	WARREN CBK

NOTES:
1. MANUFACTURER AND MODEL NUMBER LISTED ARE "OR APPROVED EQUAL".
2. PROVIDE AIR PRESSURE SWITCH, MAGNETIC CONTACTORS, HI LIMIT CONTROL, PRIMARY AND SECONDARY OVER CURRENT PROTECTION (FUSES), DOOR INTERLOCKED DISCONNECT SWITCH.
3. DIV. 26 TO PROVIDE SAFETY DISCONNECT (SEPARATED FROM AHU FAN).
4. HEATER SIZED FOR ONLY HALF OF THE TOTAL AIRFLOW. REFER TO SEQUENCES OF OPERATIONS.

AIR DEVICE & DIFFUSER SCHEDULE

SUPPLY AIR DIFFUSER (SD-1)

TITUS OMNI-AA NC < 20			DESCRIPTION: ALUMINUM SQUARE CEILING DIFFUSER, BORDER TYPE 3, COLOR WHITE WITH ROUND NECK AND FULL FACE		
CLG. MODULE SIZE INCHES	FACE SIZE INCHES	ROUND NECK SIZE	FLEX DUCT SIZE	DIFFUSER DIFFUSION PATTERN & CFM	NOTES
24 X 24	24 X 24	TO MATCH NC CRITERIA	SEE PLAN	SD1-CFM	1-4,6

SUPPLY AIR GRILLE (SD-2) SIDE WALL

TITUS 301FL NC < 20		DESCRIPTION: AEROBLADE, ALUMINUM, DOUBLE DEFLECTION DIFFUSER BORDER TYPE 1 (SURFACE MOUNT) STATIC PRESSURE: < 0.05" W.G.	
NOMINAL DUCT SIZE INCHES (INLET)	FACE SIZE INCHES (INCLUDING FRAME)	DIFFUSER DIFFUSION PATTERN & CFM	NOTES
12 X 10	INLET SIZE PLUS 1-3/4"	SD2-CFM	1-4,6,8

SUPPLY AIR DIFFUSER (SD-3)

TITUS ML-39 NC < 17			DESCRIPTION: HIGH PERFORMANCE, LINEAR SLOT DIFFUSER. SEE PLAN FOR LENGTH.		
CFM RANGE	# SLOTS	SIZE OF SLOTS INCHES	(ACTIVE SECTION) PLENUM LENGTH INCHES	DIFFUSER DIFFUSION PATTERN & CFM	NOTES
0-250	2	1	48"	SD3-CFM	1, 4, 6, 7, 9

SUPPLY DRUM LOUVER (DL-1)

TITUS S-DL-SV NC < 20			DESCRIPTION: HIGH PERFORMANCE, ALUMINUM, SUPPLY, DRUM LOUVER, CURVED FRAME, DUCT MOUNTED, OPPOSED BLADE DAMPER.		
CFM RANGE	CLG. MODULE SIZE INCHES	LISTED SIZE INCHES (INLET)	NOMINAL LENGTH INCHES	DIFFUSER DIFFUSION PATTERN & CFM	NOTES
0 - 1000	-	36 X 8	-	DL1-CFM	1, 5, 6, 10

RETURN, TRANSFER AIR GRILLE (RG-1, TG-1)

TITUS 50F NC < 20			DESCRIPTION: ALUMINUM GRID EGGCRATE RETURN GRILLE WITH BORDER TYPE 3 (LAY-IN) OR BORDER TYP 1 (SURFACE MOUNT).	
CFM RANGE	CLG. MODULE SIZE INCHES	NOMINAL DUCT SIZE INCHES (INLET)	DIFFUSER DIFFUSION PATTERN & CFM	NOTES
0 - 1600	24 X 24	18 X 18	RG1-CFM (RETURN AIR GRILLES ONLY)	1,4,6
0 - 1600	24 X 24	18 X 18	TG1-CFM (TRANSFER AIR GRILLES ONLY)	1,4,6

RETURN AIR GRILLE (RG-2, TG-2)

TITUS 60FLHD NC < 25			DESCRIPTION: BAR RETURN HEAVY DUTY GRILLE SURFACE MOUNTED, 1/2" SPACING	
CFM RANGE	FACE SIZE INCHES	NOMINAL DUCT SIZE INCHES (INLET)	DIFFUSER DIFFUSION PATTERN & CFM	NOTES
0-7000	48 X 48	48 X 48	RG2-CFM	1,4,6
0-1000	24 X 16	24 X 16	TG2-CFM	1,4,7

NOTES:
1. PROVIDE MANUFACTURER'S STANDARD BAKED WHITE ENAMEL FINISH.
2. PROVIDE FULL SIZE BACK PAN WITH DUCT ADAPTER.
3. INSULATE BACK PAN ON ALL SUPPLY AIR DIFFUSERS AND GRILLES.
4. PROVIDE MOUNTING FRAME TYPE COMPATIBLE WITH SCHEDULED CEILING OR WALL (SURFACE OR LAY-IN).
5. PROVIDE OPPOSED BLADE BALANCING DAMPER ADJUSTABLE THRU FACE OF DIFFUSER.
6. AIR DEVICES SHALL MATCH ARCHITECTURAL FINISH. COORDINATE COLOR WITH ARCHITECT.
7. PROVIDE BORDER TYPE 15, WITH CONCEALED FASTENING.
8. PROVIDE NECK MOUNTED OPPOSED BLADE DAMPER.
9. PROVIDE BORDER TYPE 9A, WITH FLANGE BORDER.
10. PROVIDE MOUNTING FRAME COMPATIBLE WITH SPIRAL DUCT MOUNTING.

AIR COOLED CHILLER SCHEDULE

MARK	QTY	NOMINAL (TONS)	CAPACITY (TONS)	AMBIENT TEMP (F)	FLOW (GPM)	MAX PD (FT WG)	EWT (F)	LWT (F)	# OF COMPRESSORS TYPE	MIN % CAPACITY	ELEC. V-PH-HZ	MCA	MOCP	IPLV AT ARI	FULL LOAD EER AT ARI	DIMENSIONS (LxWxH) IN.	OPERATING WEIGHT (LB)	MANUFACTURER & MODEL NUMBER
																		DAIKIN
CH-1, 2	2	120	120	100	240.0	10	56	44	4, SCROLL, 2 CKTS	25	480-3-60	260.5	300.0	17.25	10.39	192x88x99	6,226	AGZ120E

NOTES:
1. CONTRACTOR IS RESPONSIBLE FOR CHANGES TO DESIGN RESULTING FROM SELECTION OF OTHER MANUFACTURERS EQUIPMENT.
2. LISTED CAPACITY BASED ON ACTUAL CONDITIONS LISTED ABOVE. EFFICIENCIES LISTED AT ARI CONDITIONS.
3. PROVIDE CHILLER WITH FACTORY INSTALLED HAIL GUARDS, CONDENSER COIL COATING (E-COAT), LOW SOUND ACOUSTICAL PACKAGE (SOUND POWER-95dBA)
4. PROVIDE UNIT WITH LOW AMBIENT CONTROL TO 40°F, ACROSS THE LINE STARTER, AND SUCTION SERVICE VALVES.
5. CONDENSER COILS SHALL HAVE COPPER TUBES AND ALUMINUM FINS OR MICRO-CHANNEL COILS. PROVIDE E-COATING.
6. PROVIDE CHILLER WITH SINGLE POINT POWER CONNECTION, INCLUDING POWER FOR CONTROLS.
7. PROVIDE TERMINAL BLOCK FOR POWER CONNECTION. DIV. 26 WILL PROVIDE EXTERNALLY MOUNTED NON-FUSED DISCONNECT.
8. PROVIDE DEMAND LIMITING VIA 4-20MA INPUT FEATURE TO LIMIT MACHINE CAPACITY.

DUAL PATH AIR HANDLER UNIT SCHEDULE

MARK	TYPE	TOTAL CFM	OA CFM	ESP (INCHES)	MIN. HP	ELECT.	CHILLED WATER COIL TOTAL MBH	SENSIBLE MBH	EAT DB/WB	LAT DB/WB	EWT/LWT	GPM	WEIGHT (LBS.)	DAIKIN MODEL NUMBER	SERVES	NOTES
AHU-1	COMMON FAN	5,000	–	1.25	7.5	480/3/60	–	–	–	–	–	–	2,300	CAH009		1 thru 12
	RETURN AIR UNIT	4,000	–	–	–	–	106.0	90.7	76/64	55.0/55.0	44/56	17.7			LOCKERS	
	OUTSIDE AIR UNIT	1,000	1,000	–	–	–	91.2	32.4	83.0/79.3	53.0/53.0	44/56	15.2			NORTH	
AHU-2	COMMON FAN	5,000	–	1.25	7.5	480/3/60	–	–	–	–	–	–	2,300	CAH009		1 thru 12
	RETURN AIR UNIT	4,000	–	–	–	–	106.0	90.7	76/64	55.0/55.0	44/56	17.7			SOUTH RR	
	OUTSIDE AIR UNIT	1,000	1,000	–	–	–	91.2	32.4	83.0/79.3	53.0/53.0	44/56	15.2			CONCESSION	
AHU-3	COMMON FAN	20,000	–	1.25	20	480/3/60	–	–	–	–	–	–	5,600	CAH022		1 thru 12
	RETURN AIR UNIT	10,000	–	–	–	–	264.9	226.8	76/64	55.0/55.0	44/56	44.1			GYM	
	OUTSIDE AIR UNIT	10,000	10,000	–	–	–	912.2	324.0	83.0/79.3	53.0/53.0	44/56	152.0			EAST	
AHU-4	COMMON FAN	20,000	–	1.25	20	480/3/60	–	–	–	–	–	–	5,600	CAH022		1 thru 12
	RETURN AIR UNIT	10,000	–	–	–	–	264.9	226.8	76/64	55.0/55.0	44/56	44.1			GYM	
	OUTSIDE AIR UNIT	10,000	10,000	–	–	–	912.2	324.0	83.0/79.3	53.0/53.0	44/56	152.0			WEST	

NOTES:
1. MANUFACTURER AND MODEL NUMBER LISTED ARE "OR APPROVED EQUAL". SEE SPECIFICATIONS FOR APPROVED MANUFACTURERS AND SUBSTITUTION PROCEDURES.
2. ESP IS STRICTLY EXTERNAL STATIC PRESSURE AND IS IN ADDITION TO ANY FILTERS, COILS, HEATERS OR OTHER ACCESSORIES INCLUDED WITH THE AIR HANDLING UNIT.
3. MOTOR SHALL BE NON-OVERLOADING TYPE, TEFC, PREMIUM EFFICIENCY (E+3) INVERTER RATED. CUSTOM MOTOR IS NOT ACCEPTABLE. MOTOR SHALL BE AVAILABLE AT REGULAR SUPPLY HOUSES.
4. PROVIDE DUAL PATH UNIT, WITH SUPPORT KIT AND OUTSIDE AIR COIL ON TOP OF MAIN AIR HANDLING COIL. PROVIDE SINGLE SUPPLY AIR FAN.
5. PROVIDE FILTER MIXING BOXSECTION, COIL SECTION, AND FAN SECTION, WITH DOORS ACCESS SIDE FOR EACH. PROVIDE GALVANIZED FILTER PAD FRAMES/RACKS NO LONGER THAN 24". SEE SPECIFICATIONS.
6. PROVIDE STAINLESS STEEL LINER AND CASING IN COIL SECTION. EXTEND STAINLESS STEEL DRAIN PAN WITH THROUGH EXTENDED COIL SECTION.
7. PROVIDE MINIMUM 18" ACCESS DOORS ON SECTION IMMEDIATELY DOWNSTREAM OF THE COIL SECTION.
8. COILS SHALL BE MAXIMUM 8 ROWS WITH 11 FINS PER INCH OR LESS.
9. PROVIDE DWDI AIRFOIL OR FORWARD CURVED FANS WITH BELT GUARD, 2" SPRING ISOLATORS AND SEISMIC SNUBBERS.
10. PROVIDE LIGHT IN FAN SECTION WITH SWITCH, FIELD POWERED. COORDINATE WITH ELECTRICAL CONTRACTOR.
11. PROVIDE OUTSIDE AND RETURN AIR DAMPERS. COORDINATE ACTUATORS WITH DDC CONTRACTOR.
12. ALL COIL SHALL HAVE 5/8" TUBES, 1/2" TUBES ARE NOT ACCEPTABLE

EXHAUST FAN SCHEDULE

MARK	ROOM NUMBER SERVING	TYPE	ELECTR. V/H/P	CFM	INPUT WATTS	MOTOR HP	E.S.P. IN. H20	SOUND IN SONES	MANUFACTURER & MODEL NUMBER	WEIGHT (LBS)	CONTROL NOTES	NOTES
EF-1	GIRLS LOCKERS/TOILETS DRESSING 101	CEILING MOUNTED	120/60/1	610	241.0	–	0.4	5.0	LOREN COOK GC-720	34	A	1-6
EF-2	BOYS LOCKERS/TOILETS DRESSING 102	CEILING MOUNTED	120/60/1	610	241.0	–	0.4	5.0	LOREN COOK GC-720	34	A	1-6
EF-3	GIRLS LOCKERS/TOILETS DRESSING 103	CEILING MOUNTED	120/60/1	610	241.0	–	0.4	5.0	LOREN COOK GC-720	34	A	1-6
EF-4	BOYS LOCKERS/TOILETS DRESSING 104	CEILING MOUNTED	120/60/1	610	241.0	–	0.4	5.0	LOREN COOK GC-720	34	A	1-6
EF-5	LAUNDRY 111	CEILING MOUNTED	120/60/1	200	74.2	–	0.6	3.5	LOREN COOK GC-422	31	A	1-6
EF-6	TOILET 107	CEILING MOUNTED	120/60/1	75	55.9	–	0.6	2.0	LOREN COOK GC-186	15	B	1-6
EF-7	TOILET 108	CEILING MOUNTED	120/60/1	75	55.9	–	0.6	2.0	LOREN COOK GC-186	15	B	1-6
EF-8	WOMENS RR 119	CEILING MOUNTED	120/60/1	1125	–	0.5	0.4	3.0	LOREN COOK GC-1000	94	A	1-6
EF-9	MENS RR 118	CEILING MOUNTED	120/60/1	600	283.0	–	0.4	4.5	LOREN COOK GC-740	34	A	1-6
EF-10	WOMENS RR 121	CEILING MOUNTED	120/60/1	1125	–	0.50	0.4	3.0	LOREN COOK GC-1000	94	A	1-6
EF-11	MENS RR 120	CEILING MOUNTED	120/60/1	600	283.0	–	0.4	4.5	LOREN COOK GC-740	34	A	1-6
EF-12	CONCESSIONS 128	CEILING MOUNTED	120/60/1	180	69.4	–	0.6	3.5	LOREN COOK GC-422	29	A	1-6
EF-13	CUSTODIAN 126	CEILING MOUNTED	120/60/1	50	31.2	–	0.6	2.0	LOREN COOK GC-146	15	B	1-6

NOTES:
1. PROVIDE FACTORY MOUNTED DISCONNECT.
2. MANUFACTURER AND MODEL NUMBER LISTED ARE "OR APPROVED EQUAL." REFER TO SPECIFICATIONS.
3. PROVIDE FIELD-INSTALLED FAN SPEED CONTROLLER. COORDINATE INSTALLATION WITH ELECTRICAL CONTRACTOR.
4. PROVIDE FAN WITH ALL ALUMINUM BACKDRAFT DAMPER.
5. PROVIDE PAINTED WHITE DELUXE ALUMINUM GRILLE WHERE AVAILABLE. IF DELUXE ALUMINUM GRILLE IS NOT AVAILABLE, PROVIDE PAINTED WHITE STYRENE GRILLE.
6. PROVIDE SPRING TYPE VIBRATION ISOLATORS FROM MANUFACTURER.

CONTROL NOTES:
A. PROVIDE DDC START/STOP POINTS. REFER TO SEQUENCES OF OPERATIONS.
B. FAN SHALL BE OPERATED BY A WALL SWITCH VIA THE OCCUPANCY SENSOR PROVIDED BY DIV.26 COORDINATE WITH ELECTRICAL CONTRACTOR.

LOUVER SCHEDULE

MARK	SERVES	CFM RANGE	FACE SIZE (W X H)	MIN. FREE AREA (FT2)	MANUFACTURER & MODEL NUMBER	NOTES
Supply						
SL-1	AHU-1 AHU-3, AHU-4	21000	132 X 102	47.54	RUSKIN EME520MD	1-6
SL-2	AHU-2	1000	36 X 24	2.22	RUSKIN EME520MD	1-6
Exhaust						
EL-1	EF-1, EF-2 EF-5	1420	64 X 16	2.53	RUSKIN EME520MD	1-6
EL-2	EF-3, EF-4 EF-6, EF-7	1370	64 X 16	2.53	RUSKIN EME520MD	1-6
EL-3	EF-8, EF-9	1725	42 X 24	3.13	RUSKIN EME520MD	1-6
EL-4	EF-10, EF-11 EF-12, EF-13	1930	54 X 24	4.07	RUSKIN EME520MD	1-6

NOTES:
1. PRIOR TO ORDERING, COORDINATE LOUVER FINISH AND EXACT FACE SIZE WITH ARCHITECT.
2. PROVIDE STAINLESS STEEL INSECT SCREEN AND HARDWARE.
3. PROVIDE FACTORY APPLIED KYNAR 500 FINISH.
4. LOUVERS SHALL HAVE FACTORY APPLIED CUSTOM COLOR. COORDINATE CUSTOM COLOR WITH OWNER & GENERAL CONTRACTOR PRIOR TO ORDERING.
5. DURING SUBMITTAL PHASE PROVIDE TDI EVALUATION REPORT INDICATING INSTALLATION DETAILS SPECIFICALLY FOR THE PROJECT'S WALL SUBSTRATE. REFER TO ARCHITECTURAL AND STRUCTURAL PLANS FOR WALL SUBSTRATE DETAILS.

VFD SCHEDULE

MARK	EQUIPMENT SERVED	MOTOR HP	FL AMPS	ELECTRICAL V/P/Hz	MANUFACTURER & MODEL NUMBER	NOTES
AIR HANDLER UNITS						
VFD-1	AHU-1	7.5	11	480/3/60	DANFOSS VLT-HVAC	1-3
VFD-2	AHU-2	7.5	11	480/3/60	DANFOSS VLT-HVAC	1-3
VFD-3	AHU-3	20	27	480/3/60	DANFOSS VLT-HVAC	1-3
VFD-4	AHU-4	20	27	480/3/60	DANFOSS VLT-HVAC	1-3
CHILLED WATER PUMPS						
VFD-CHP1	CHP-1	10	14	480/3/60	DANFOSS VLT-HVAC	1-3
VFD-CHP2	CHP-2	10	14	480/3/60	DANFOSS VLT-HVAC	1-3
VFD-CHP3	CHP-3	10	14	480/3/60	DANFOSS VLT-HVAC	1-3

NOTES:
1. PROVIDE NEMA 1 ENCLOSURE FOR VFD LOCATED INDOORS.
2. PROVIDE INTEGRAL DISCONNECT.
3. PROVIDE BYPASS WITH VFDS.

ethos engineering
119 W. VAN BUREN AVE. STE 101
HARLINGEN, TX
PHONE 956.230.3435
TEXAS REGISTERED
ENGINEERING FIRM
F-15598

No.	REVISIONS	BY

GMS ARCHITECTS
1150 Paredes Line Rd.
Brownsville TX 78526
(956) 546-0110
fax (956) 546-0196

BISD Hanna ECHS
Gymnasium Facility

STATE OF TEXAS
CESAR A. GONZALEZ
108611
06.12.2019

© Copyright 2019
Gomez Mendez Saenz Inc.
Architects-Planners
Interior Designers

Date: June 12, 2019
Scale: As Noted
Project Architect: David Monreal, AIA
Drawn By: ETHOS
Job No. BISD Hanna Gymnasium
Sheet: M6.01

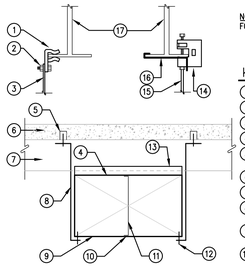

NOTE:
FOLLOW SMACNA GUIDELINES FOR DUCT SUPPORT.

KEYED NOTES

1. FRICTION CLAMP.
2. NUT & BOLT.
3. HANGER STRAP.
4. ARRANGE SEAM JOINTS TO MISS BEAMS.
5. INSERT-DO NOT INSERT INTO BOTTOM OF BEAMS OR JOISTS.
6. CEILING SLAB.
7. CONSTRUCTION BEAM.
8. 1" X 18 GA. STRAP HANGER (ONE HANGER ON DUCTS 31" AND UP).
9. DUCT WITH FLAT SEAM CONSTRUCTION (STANDARD "S" SLIP SNUG TO BEAM).
10. 3/16" SD 6485 DOP RIVETS (TWO EACH AT TOP & BOTTOM OF VERTICAL STIFFENER).
11. 1-1/2" X 16 GA. STEEL BAR SUPPORT LOCATED CLOSE TO STIFFENER. DUCT WIDTH TO 24" - NOT REQUIRED DUCT WIDTH 25" TO 47" - ONE (1) REQUIRED.
12. #6 X 3/8" S/M SCREW (TYP).
13. ANGLE STIFFENER FOR DUCT WIDTH 25" TO 40": 1" STANDING "S" OR 1" X 1" X 1/2" ANGLE.
14. C-CLAMP WITH RETAINING CLIP OR WITH LOCK NUT (OPTIONAL).
15. HANGING ROD.
16. RETAINING CLIP.
17. STRUCTURAL.

01 TYPICAL DUCT SUPPORT
SCALE : NOT TO SCALE

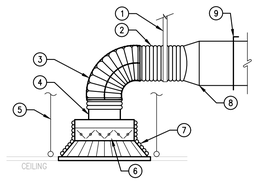

KEYED NOTES

1. STRAP HANGER.
2. FLEX SUPPLY DUCT, TYP.
3. DUCT COLLAR (TO RETAIN ELBOW SHAPE).
4. ROUND NECK ADAPTOR.
5. HANGER. TYP.
6. OPPOSED BLADE DAMPER (ALTERNATIVE), TYP.
7. INSULATION, TYP.
8. RECT. TO ROUND TRANSITION, TYP.
9. VOLUME DAMPER AT TAKE-OFF (PREFERED LOCATION), TYP.

02 CEILING DIFFUSER SUPPORT
SCALE : NOT TO SCALE

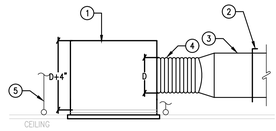

KEYED NOTES

1. SHEET METAL (PAINTED WHERE EXPOSED) PLENUM BOX. PROVIDE SUFFICIENT SUPPORT PER SMACNA REQUIREMENTS TO PLACE NO LOAD ON CEILING GRID.
2. VOLUME DAMPER AT TAKE-OFF (PREFERED LOCATION), TYP.
3. DUCT AS SHOWN ON PLANS TYP.
4. FLEX.
5. HANGER, TYP.

03 CEILING RETURN GRILLE DETAIL
SCALE : NOT TO SCALE

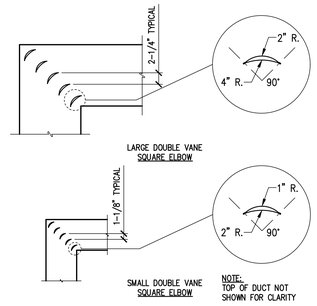

04 TYPICAL VANED DUCT ELBOWS
SCALE : NOT TO SCALE

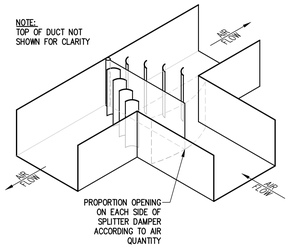

05 TYPICAL SPLITTER DAMPER
SCALE : NOT TO SCALE

NOTES:

1. FIT ALL CONNECTIONS TO AVOID VISIBLE OPENINGS & SECURE SUITABLY FOR THE PRESSURE CLASS.
2. ADDITIONAL MECHANICAL FASTENERS REQ'D. FOR 4" W.G. & OVER.
3. DO NOT EXPOSE LINER EDGES ON LINED DUCT CONNECTIONS.
4. ALL OPENINGS TO BE CUT ACCURATELY IN SHAPE & SIZE.

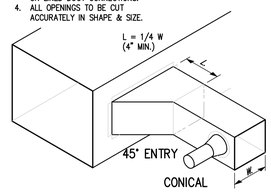

06 BRANCH CONNECTION DETAILS
SCALE : NOT TO SCALE

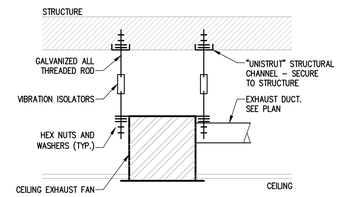

07 CEILING EXHAUST FAN MOUNTING DETAIL
SCALE : NOT TO SCALE

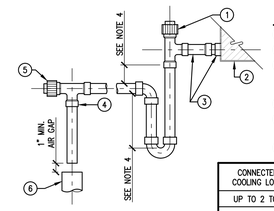

KEYED NOTES

1. CLEAN OUT.
2. DRAIN PAN.
3. DRAIN LINE SHALL BE AT LEAST OF THE SAME SIZE AS THE DRAIN PAN CONNECTION.
4. PITCH.
5. CLEAN OUT.
6. OPEN DRAIN.

NOTES:

1. MANUALLY PRIME TRAP BEFORE START UP.
2. SUPPORT DRAIN LINES TO PREVENT SAG.
3. ALLOW SUFFICIENT SPACE BELOW PAN FOR TRAP AND PITCH TO DRAIN.
4. COORDINATE WITH MANUFACTURER OF AHU.

CONNECTED COOLING LOAD	MIN. * PIPE SIZE
UP TO 2 TON	3/4"
2-5	1"
5-30	1-1/4"
30-50	1-1/2"
50-160	2"
160-300	3"
300-430	4"

* NOT SMALLER THAN OUTLET SIZE.

08 CONDENSATE DRAIN DETAIL
SCALE : NOT TO SCALE

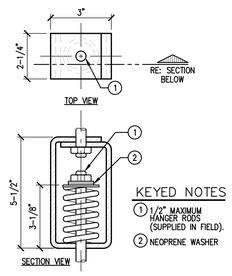

KEYED NOTES

1. 1/2" MAXIMUM HANGER RODS (SUPPLIED IN FIELD).
2. NEOPRENE WASHER

09 SPRING ISOLATION HANGER
SCALE : NOT TO SCALE

No.	REVISIONS	BY

GMS ARCHITECTS
1150 Paredes Line Rd.
Brownsville TX 78526
(956) 546-0110
fax (956) 546-0196

BISD Hanna ECHS
Gymnasium Facility

STATE OF TEXAS
CESAR A. GONZALEZ
108611
06.12.2019

© Copyright 2019
Gomez Mendez Saenz Inc.
Architects-Planners
Interior Designers

Date: June 12, 2019
Scale: As Noted
Project Architect: David Monreal, AIA
Drawn By: ETHOS
Job No: BISD Hanna Gymnasium
Sheet: M7.01

ethos engineering
119 W. VAN BUREN AVE. STE.101
HARLINGEN, TX
PHONE: 956-230-3435
TEXAS REGISTERED
ENGINEERING FIRM
F-15998

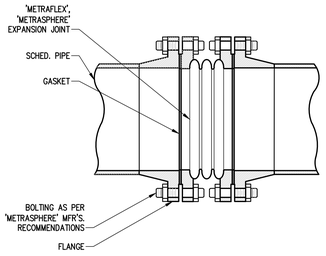

01 TYPICAL EXPANSION JOINT

SCALE : NOT TO SCALE

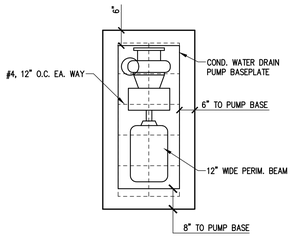

NOTE: PROVIDE SPRING TYPE VIBRATION ISOLATION INERTIA BASE.

02 PUMP HOUSEKEEPING PAD

SCALE : NOT TO SCALE

NOTES:
1. USE HARDWOOD BLOCKS FOR SADDLES ON CHILLED WATER LINES.
2. INSULATION THICKNESS SHALL BE AS SPECIFIED.
3. SIZE HANGERS, ROLLER, & U-BOLTS FOR PIPE PLUS INSULATION.
4. PROTECT ALL INSULATION TO HANGER MATERIAL CONTACTS W/ INSULATION PROTECTION.

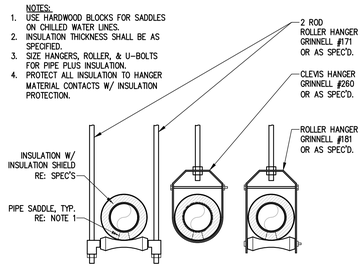

03 PIPING HANGER DETAIL

SCALE : NOT TO SCALE

NOTES:
1. USE HARDWOOD BLOCKS FOR SADDLES ON CHILLED WATER LINES.
2. INSULATION THICKNESS SHALL BE AS SPECIFIED. SIZE HANGERS, ROLLER, & U-BOLTS FOR PIPE PLUS INSULATION.
3. PROTECT ALL INSULATION TO HANGER MATERIAL
4. CONTACTS W/ INSULATION PROTECTION.

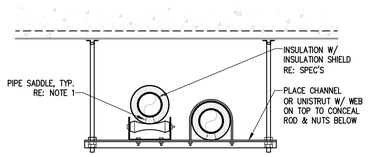

04 PIPING HANGER DETAIL

SCALE : NOT TO SCALE

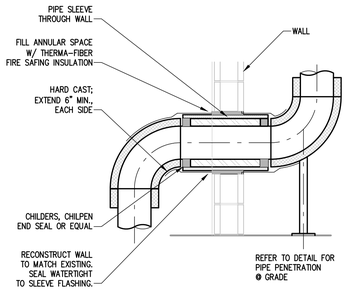

05 PIPE PENETRATION AT WALL DETAIL

SCALE : NOT TO SCALE

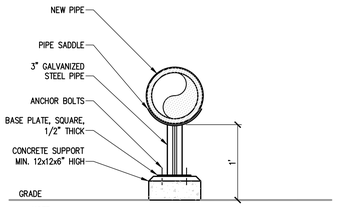

NOTE:
1. ALL STEEL EXPOSED TO EXTERIOR SHALL BE HOT DIPPED GALVANIZED & PAINTED WITH EPOXY PAINT.

06 CONCRETE PIPE SUPPORT DETAIL

SCALE : NOT TO SCALE

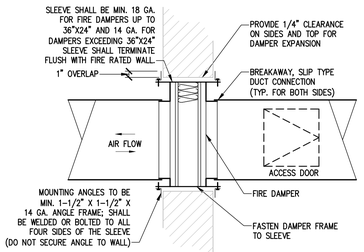

NOTES:
1. FIRE DAMPER TO BE LABELED IN ACCORDANCE WITH UL STANDARDS, AND STATE FIRE MARSHALL APPROVED.
2. INSTALLATION DETAILS SHALL MEET NFPA 90A & B REQUIREMENTS.
3. LOCATE ACCESS DOOR FOR BEST ACCESS TO LINK.
4. FUSIBLE LINK TO BE RATED FOR 50% ABOVE MAXIMUM OPERATING TEMPERATURE OF SYSTEM.
   FOR STAINLESS STEEL FIRE DAMPER METAL GAUGE, REFER TO MANUFACTURER
6. RECOMMENDATIONS.
7. FIRE DAMPER SHALL BE RATED FOR DYNAMIC DUTY.
   SLEEVE SHALL TERMINATE FLUSH WITH FIRE RATED WALL.

07 FIRE DAMPER WITH ACCESS PANEL

SCALE : NOT TO SCALE

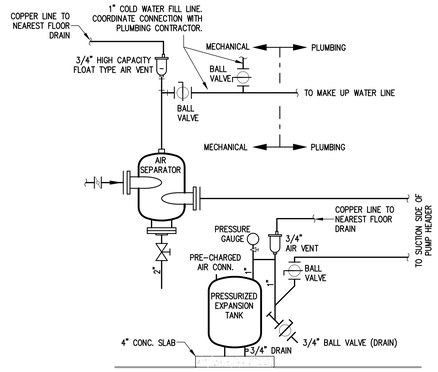

08 AIR SEPARATOR & EXPANSION TANK DETAIL

SCALE : NOT TO SCALE

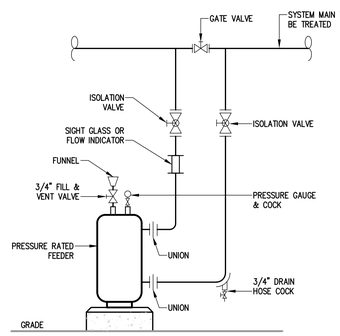

09 CHEMICAL TREATMENT POT FEEDER

SCALE : NOT TO SCALE

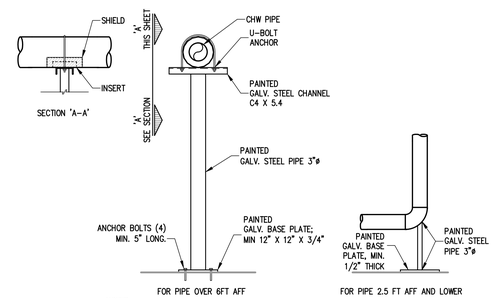

NOTES:
1. ALL EXTERIOR SUPPORT STRUCTURE SHALL HAVE 4" CONCRETE PAD UNDER BASE PLATE.
2. ALL STEEL EXPOSED TO EXTERIOR SHALL BE HOT DIPPED GALVANIZED & PAINTED WITH EPOXY PAINT.

10 PIPE SUPPORT STRUCTURE

SCALE : NOT TO SCALE

KEYED NOTES

1. 2-1/2" & LARGER BUTTERFLY VALVES FOR SHUTOFF, LINE SIZE; BALL VALVES FOR 2" AND BELOW
2. Y STRAINER WITH 3/4" BALL VALVE ON DISCHARGE
3. PRESSURE/TEMPERATURE TEST PLUG WITH COCK AND CAP
4. 2-WAY MODULATING DDC CONTROL VALVE WITH ELECTRIC ACTUATOR, PROVIDED BY CONTROLS CONTRACTOR INSTALLED BY MECHANICAL CONTRACTOR
5. AUTOMATIC AIR VENT W/MANUAL SHUT-OFF
6. DIELECTRIC STEEL/COPPER CONNECTION AT UNIT

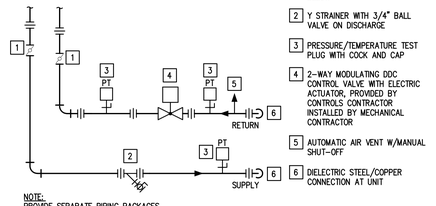

NOTE:
PROVIDE SEPARATE PIPING PACKAGES FOR TOP AND BOTTOM UNITS OF DUAL PATH AIR HANDLERS.

11 CHILLED WATER COIL CONNECTION SCHEMATIC

SCALE : NOT TO SCALE

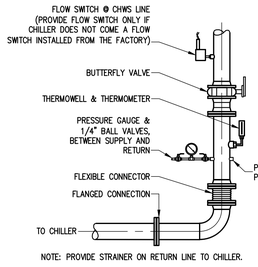

NOTE: PROVIDE STRAINER ON RETURN LINE TO CHILLER.

12 CHILLER PIPING CONNECTION DETAIL

SCALE : NOT TO SCALE

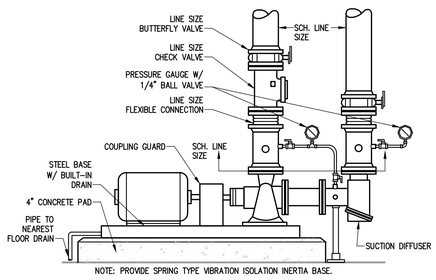

NOTE: PROVIDE SPRING TYPE VIBRATION ISOLATION INERTIA BASE.

NOTES:
1. PIPE SIZE INDICATED ON DRAWING SHALL BE FULL SIZE TO POINT OF CONNECTION TO PUMP FLANGES. PIPING COMPONENTS SUCH AS VALVES, STRAINERS, FLEXIBLE CONNECTORS SHALL BE SAME SIZE AS PIPING SERVING PUMPS.
2. INSULATE CHILLED WATER PUMPS AS PER SPECIFICATIONS.

13 END SUCTION PUMP DETAIL

SCALE : NOT TO SCALE

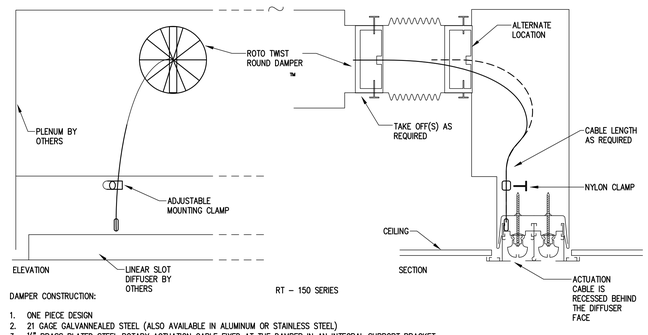

DAMPER CONSTRUCTION:
1. ONE PIECE DESIGN
2. 21 GAGE GALVANNEALED STEEL (ALSO AVAILABLE IN ALUMINUM OR STAINLESS STEEL)
3. ¼" BRASS PLATED STEEL ROTARY ACTUATION CABLE FIXED AT THE DAMPER IN AN INTEGRAL SUPPORT BRACKET.

(DETAIL COURTESY OF ROTOTWIST.)

14 CABLE OPERATED VOLUME DAMPER DETAIL

SCALE : NOT TO SCALE

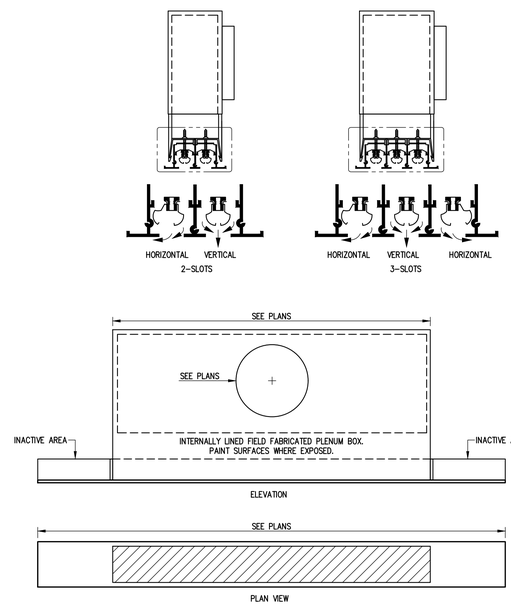

15 FLOWBAR DIFFUSER DETAIL

SCALE : NOT TO SCALE

No.	REVISIONS	BY

GMS ARCHITECTS
1150 Paredes Line Rd.
Brownsville TX 78526
(956) 546-0110
fax (956) 546-0196

BISD Hanna ECHS
Gymnasium Facility

STATE OF TEXAS
CESAR A. GONZALEZ
108611
LICENSED PROFESSIONAL ENGINEER
06.12.2019

© Copyright 2019
Gomez Mendez Saenz Inc.
Architects-Planners
Interior Designers

Date:	June 12, 2019
Scale:	As Noted
Project Architect:	David Monreal, AIA
Drawn By:	ETHOS
Job No:	BISD Hanna Gymnasium
Sheet:	M7.02

ethos engineering
119 W. VAN BUREN AVE. STE.101
HARLINGEN, TX
PHONE: 956-230-3435
TEXAS REGISTERED ENGINEERING FIRM F-15998

SCOPE OF WORK

1. GENERAL: THE 'BISD HANNA HS GYM BUILDING' CONSISTS OF NEW ONE-STORY BUILDING, APPROXIMATE 39,475 S.F. THIS BUILDING WILL GENERALLY BE OPERATED FROM 7:00AM TO 6:00PM. (MONDAY THROUGH FRIDAY) WITH OCCASIONAL AFTER HOURS AND WEEKENDS USE.
2. ELECTRICAL: PROVIDE ALL MATERIALS AND LABOR ASSOCIATED WITH COMPLETE OPERATIONAL ELECTRICAL DISTRIBUTION SYSTEM. MAJOR ITEMS OF WORK INCLUDE, BUT ARE NOT LIMITED TO:
   - (A) ELECTRICAL SERVICE:
     - (I) PROVIDE A NEW UNDERGROUND ELECTRICAL SERVICE; IT SHALL CONSIST OF UNDERGROUND ELECTRICAL RACEWAYS AND CONCRETE PAD FOR UTILITY FURNISHED TRANSFORMER.
     - (II) UTILITY COMPANY SHALL PROVIDE MEDIUM VOLTAGE CONDUCTORS AND PAD TRANSFORMER.
     - (III) SINGLE PHASE PROTECTION: PROVIDE AS NOTED ON PANELS SCHEDULES.
   - (B) LIGHTING SYSTEMS: INTERIOR AND EXTERIOR LIGHTING SYSTEM SHALL CONSIST OF LED TYPE.
   - (C) LIGHTING CONTROLS (SWITCHES, OCCUPANCY SENSORS, DAYLIGHT SENSORS, ETC.): PROVIDE AS NOTED ON PLANS SPECIFICATIONS. IN SOME CASES, THEY WILL BE CEILING MOUNTED AND OTHERS WALL MOUNTED. IT'S THE INTENT FOR THEM TO BE WIRED TO AUTOMATICALLY CONTROL THE LUMINAIRES IN THEIR RESPECTIVE AREAS.
   - (D) COMMISSIONING: PROVIDE FOR THE LIGHTING EQUIPMENT AND LIGHTING CONTROLS AS REQUIRED PER IECC 2015.
   - (E) POWER SYSTEMS: PROVIDE MISCELLANEOUS DUPLEX RECEPTACLES, ISOLATED GROUND RECEPTACLES FOR COMPUTER TERMINALS, DUPLEX RECEPTACLES FOR FLAT SCREENS CONNECTIONS, AND POWER FOR MARQUEE/BUILDING SIGNS, BANKING, H.V.A.C. AND PLUMBING EQUIPMENT.
   - (F) FIRE ALARM SYSTEM: PROVIDE ROUGH-IN ONLY. COORDINATE EXACT LOCATIONS WITH FIRE ALARM CONTRACTOR SHOP DRAWINGS PRIOR TO ANY ROUGH-IN. SYSTEM TO BE PROCURED BY OWNER UNDER A SEPARATE CONTRACT.
   - (G) COMMUNICATION AND DATA PROCESSING EQUIPMENT: PROVIDE ROUGH-INS ONLY. CABLING, CONNECTORS, PATCH PANELS, RACKS, ETC. BY OWNER. SYSTEM TO BE PROCURED BY OWNER UNDER A SEPARATE CONTRACT.
   - (H) MULTIMEDIA SYSTEM: PROVIDE ROUGH-INS FOR MULTIMEDIA OUTLET AND FLAT SCREENS. CONNECTORS, CABLING AND OUTLETS BY OWNER. SYSTEM TO BE PROCURED BY OWNER UNDER A SEPARATE CONTRACT.
   - (A) SCHOOL INTERCOM SYSTEM: PROVIDE ROUGH-IN ONLY. COORDINATE EXACT LOCATIONS WITH INTERCOM CONTRACTOR SHOP DRAWINGS PRIOR TO ANY ROUGH-IN. SYSTEM TO BE PROCURED BY OWNER UNDER A SEPARATE CONTRACT.
   - (B) GYMNASIUM SOUND SYSTEM: PROVIDE SPEAKERS, MICROPHONE OUTLETS, MICROPHONE, MICROPHONE STANDS, WIRING AND MOBILE CART. SEE SPECIFICATIONS.
   - (C) INTRUSION DETECTION SYSTEM: PROVIDE ROUGH-IN ONLY. COORDINATE EXACT LOCATIONS WITH INTRUSION DETECTION CONTRACTOR SHOP DRAWINGS PRIOR TO ANY ROUGH-IN. SYSTEM TO BE PROCURED BY OWNER UNDER A SEPARATE CONTRACT.
   - (D) BUILDING ACCESS: PROVIDE ROUGH-IN ONLY. COORDINATE EXACT LOCATIONS WITH BUILDING ACCESS CONTRACTOR SHOP DRAWINGS PRIOR TO ANY ROUGH-IN.
   - (E) CCTV, BUILDING ACCESS SYSTEMS: PROVIDE ROUGH-IN ONLY. COORDINATE EXACT LOCATIONS WITH SHOP DRAWINGS PRIOR TO ANY ROUGH-IN. SYSTEM TO BE PROCURED BY OWNER UNDER A SEPARATE CONTRACT.

ABBREVIATIONS:

A	AMPS	EF	EXHAUST FAN	MECH	MECHANICAL
ABC	ABOVE CEILING LINE	EMS	ENERGY MANAGEMENT SYSTEM	MS	MOTOR STARTER
AC	ABOVE COUNTER BACKSPLASH	EXT.	EXTERNAL OR EXTERIOR	NTS	NOT TO SCALE
ACCU	AIR COOLED CONDENSING UNIT	FACP	FIRE ALARM CONTROL PANEL	OAU	OUTSIDE AIR UNIT
AHU	AIR HANDLING UNIT	FCU	FAN COIL UNIT	PA	PUBLIC ADDRESS
AFF	ABOVE FINISHED FLOOR	FD	FIRE DAMPER	PH	PHASE
B.	BOTTOM	FEC	FIRE EXTINGUISHER CABINET	RM.	ROOM
BLC.	BELOW CEILING LINE	FS	FLAT SCREEN	SPD	SURGE PROTECTION DEVICE
C.	CONDUIT OR COMMON	G.	GROUND	SS	STAINLESS STEEL
CLG.	CEILING	GA.	GAGE	TSTAT	THERMOSTAT
COMB.	COMBINATION	GALV.	GALVANIZED	UG	UNDERGROUND
CU.	COPPER	GRND.	GROUND	UNO	UNLESS OTHERWISE NOTED
DDC	DIRECT DIGITAL CONTROLS	HP	HORSEPOWER	V	VOLTS
DISC.	DISCONNECT	HVAC	HEATING, VENTILATION, & AIR CONDITIONING	VFD	VARIABLE FREQUENCY DRIVE
EDH	ELECTRIC DUCT HEATER			W	WIRE
		INT.	INTRUSION DETECTION		

WIRING DEVICES SYMBOL LEGEND:

SYMBOL	DESCRIPTION	MNTG. HT. UNO (SEE NOTE 1)
	DUPLEX RECEPTACLE TAMPER RESISTANT – HUBBELL MODEL #BR20XTR	18"AFF
GFCI	DUPLEX RECEPTACLE TAMPER RESISTANT W/ GROUND FAULT INTERRUPTING TYPE – HUBBELL MODEL #GFTRST20X	18"AFF
GFCI WCP	DUPLEX RECEPTACLE TAMPER RESISTANT W/ GRND. FAULT INTERRUPTING TYPE – HUBBELL MODEL #GFTWRST20X & WHILE IN USE WEATHERPROOF COVER – HUBBELL MODEL #WP26EH	18"AFF
AC	DUPLEX RECEPTACLE TAMPER RESISTANT – HUBBELL MODEL #BR20XTR MOUNT @ +4" HORIZONTALLY ABOVE COUNTER BACKSPLASH (U.N.O.)	4"AC
FS	DUPLEX RECEPTACLE FOR FLAT SCREEN – HUBBELL MODEL #CR5352X	84"AFF
	SPECIAL RECEPTACLE – TYPE AS NOTED	18"AFF
	JUNCTION BOX W/ BLANK STAINLESS STEEL COVERPLATE	AS REQUIRED
USB	DUPLEX RECEPTACLE AND USB RECEPTACLE COMBINATION – HUBBELL MODEL #USB20X2X	18"AFF
	POLYMER CONCRETE PULL BOX W/ LOGO COVER – SEE DETAIL	AS REQUIRED

NOTES:
1.) 48" AFF INDICATES TO TOP OF DEVICE;
18" AFF INDICATES TO TOP OF DEVICE;
ALL OTHER MOUNTING HEIGHTS REFER TO CENTERLINE OF DEVICE.
AC INDICATES 4" ABOVE COUNTER TO BOTTOM OF DEVICE.
U.N.O. INDICATES UNLESS NOTED OTHERWISE.

FIRE ALARM SYMBOL LEGEND:

SYMBOL	DESCRIPTION	MNTG. HT. UNO (SEE NOTE 1)
PS	FIRE ALARM MANUAL PULLSTATION – PROVIDE BACKBOX WITH 1/2"C AND PULLWIRE.	48"AFF
AV AV	FIRE ALARM STROBE HORN CEILING OR WALL MOUNTED – PROVIDE BACKBOX WITH 1/2"C AND PULLWIRE.	80"AFF
SS SS	FIRE ALARM SPEAKER STROBE CEILING OR WALL MOUNTED – PROVIDE BACKBOX WITH 1/2"C AND PULLWIRE.	80"AFF
SS WP	FIRE SPRINKLER RISER ALARM SPEAKER STROBE (WEATHER PROOF) – PROVIDE BACKBOX WITH 1/2"C AND PULLWIRE.	80"AFF
V	FIRE ALARM STROBE LIGHT – PROVIDE BACKBOX WITH 1/2"C AND PULLWIRE.	CLG.
HD	FIRE ALARM HEAT DETECTOR – PROVIDE BACKBOX WITH 1/2"C AND PULLWIRE.	CLG.
SD	FIRE ALARM SMOKE DETECTOR – PROVIDE BACKBOX WITH 1/2"C AND PULLWIRE.	CLG.
SD	FIRE ALARM H.V.A.C. DUCT SMOKE DETECTOR W/ SHUNT TRIP RELAY – PROVIDE BACKBOX WITH 1/2"C AND PULLWIRE. PROVIDE A REMOTE TEST SWITCH.	- - - -
F	FIRE SPRINKLER FLOW SWITCH	- - - -
TS	FIRE SPRINKLER TAMPER SWITCH – PROVIDE BACKBOX WITH 1/2"C AND PULLWIRE.	- - - -
	FIRE ALARM CONTROL/VOICE EVACUATION PANEL (FLUSH MOUNTED)	- - - -
	FIRE ALARM ANNUNCIATOR PANEL (SURFACE MOUNTED)	- - - -

NOTES:
1.) 48" AFF INDICATES TO TOP OF DEVICE;
ALL OTHER MOUNTING HEIGHTS REFER TO CENTERLINE OF DEVICE.
PRIOR TO ANY ROUGH-IN COORDINATE EXACT LOCATION OF BACK BOXES WITH OWNER/FIRE ALARM SYSTEM SUPPLIER.

FLOOR BOX SYMBOL LEGEND:

SYMBOL	DESCRIPTION	MNTG. HT. UNO (SEE NOTE 1)
	FLOOR BOX W/ COVER PLATES FOR WIRING DEVICES AS INDICATED. PROVIDE SPECIAL SYSTEMS RACEWAYS, TWO – 1.5" OR AS NOTED ON ELECTRICAL DRAWINGS. PROVIDE BLANK COVERS FOR UNUSED COMPARTMENTS – HUBBELL MODEL #CFB6G30/610GCCVRBRZC.	FLOOR

NOTES:
1.) TOP OF FLOOR BOX TO BE FLUISH WITH FINISHED FLOOR. SEE ARCHITECTURAL DRAWINGS FOR FLOOR TYPES. RACEWAYS TO RISE UP AT NEAREST INTERIOR WALL STUBBED UP TO AN ACCESSIBLE LOCATION ABOVE THE CEILING UNO.

LIGHTING WIRING DEVICES SYMBOL LEGEND:

SYMBOL	DESCRIPTION	MNTG. HT. UNO (SEE NOTE 1)
S	SINGLE POLE TOGGLE SWITCH – HUBBELL MODEL #HBL1221X	48"AFF
S_3	THREE WAY TOGGLE SWITCH – HUBBELL MODEL #HBL1223X	48"AFF
S_K	KEYED TOGGLE SWITCH CORBIN TYPE – HUBBELL MODEL #HBL1221RKLX	48"AFF
PC	DIGITAL OUTDOOR PHOTO CELL WALL MOUNTED – LC&D SEE DETAIL	12' AFF
TC	TIME CLOCK – 365 DAY, ASTRONOMICAL, 2-CHANNEL, PROGRAMMABLE.	AS REQUIRED

NOTES:
1.) 48" AFF INDICATES TO TOP OF DEVICE;
ALL OTHER MOUNTING HEIGHTS REFER TO CENTERLINE OF DEVICE.

SPECIAL SYSTEMS SYMBOL LEGEND:

SYMBOL	DESCRIPTION	MNTG. HT. UNO (SEE NOTE 1)
FS	FLAT SCREEN OUTLET BACKBOX – SEE DETAIL.	72"AFF
HM	2-GANG MULTIMEDIA OUTLET – PROVIDE LARGE CAPACITY WALL BOX HUBBEL MODEL NO. HBL260 W/1.5" RACEWAY STUBBED INTO ACCESSIBLE CLG. WITH PULL WIRE AND MUD RING.	18"AFF
	DATA OUTLET – PROVIDE BACK BOX WITH 1" RACEWAY STUBBED INTO ACCESSIBLE CLG. WITH PULL WIRE – SEE DETAIL.	18"AFF
	DATA OUTLET/VOICE OVER IP – PROVIDE BACK BOX WITH 1" RACEWAY STUBBED INTO ACCESSIBLE CLG. WITH PULL WIRE – SEE DETAIL.	18"AFF
	TELEPHONE OUTLET – PROVIDE BACK BOX WITH 1" RACEWAY STUBBED INTO ACCESSIBLE CLG. WITH PULL WIRE – SEE DETAIL.	18"AFF
WIFI	WIRELESS ACCESS POINT – PROVIDE BACK BOX WITH 1" RACEWAY STUBBED INTO ACCESSIBLE CLG. WITH PULL WIRE – SEE DETAIL.	CEILING

NOTES:
1.) 48" AFF INDICATES TO TOP OF DEVICE;
ALL OTHER MOUNTING HEIGHTS REFER TO CENTERLINE OF DEVICE.

LUTRON CONTROL SYMBOLS:

MS OS	OCCUPANCY WALL SENSOR SWITCH – LUTRON MS-OPS6-DDV-WH	48"AFF
PD	PICO WIRED WALL SWITCH – LUTRON PX-2B-GXX-I01	48" AFF
K	KEYED WALLSTATION – LUTRON QSWS2-KS3MOC-WH	48"AFF
	OCCUPANCY SENSOR – LUTRON LUT-WSPSM24V-360-CPN6111	CLG.
TC	TIME CLOCK – LUTRON QSGR-TC-3S-WH-CPN5825	---
ACI	CONTROLLER INTERFACE – LUTRON QSE-CI-AP-D	ABV. CLG.
ESN	ENERGI SAVR NODE – LUTRON QSN-4T16-S	AS REQUIRED
ATI	KIT – LUTRON C-ESN-SETUP	AS REQUIRED
	SENSOR – LUTRON LOS-CDT-2000-WH	CLG.
MS 0-10	OCCUPANCY DIMMING WALL SENSOR SWITCH – LUTRON MS-Z101-WH PROVIDE 0-10V SIGNAL WIRE IN RACEWAY FROM SWITCH TO EACH CONTROLLED LIGHT FIXTURE	48" AFF

NOTES:
1.) 48" AFF INDICATES TO TOP OF DEVICE; ALL OTHER MOUNTING HEIGHTS REFER TO CENTERLINE OF DEVICE. REFERENCE LIGHTING CONTROL SCHEMATIC DETAILS FOR ALL LUTRON CONTROLS WIRING REQUIREMENTS.

LIGHTING SYMBOL LEGEND:

SYMBOL	DESCRIPTION	MNTG. HT. UNO (SEE NOTE 1)
	2'X4' LIGHT FIXTURE – TYPE AS NOTED	- - - -
	EMERGENCY 2'X4' LIGHT FIXTURE-TYPE AS NOTED CONNECT BATTERY PACK TO BE ON AT ALL TIMES (UNSWITCHED)	- - - -
	SURFACE/WRAPAROUND LIGHT FIXTURE	- - - -
	SURFACE/WRAPAROUND EMERGENCY LIGHT FIXTURE CONNECT BATTERY PACK TO BE ON AT ALL TIMES (UNSWITCHED)	- - - -
	SINGLE FACE EXIT SIGN (DIRECTIONAL ARROWS WHERE INDICATED)	- - - -
	DOUBLE FACE EXIT SIGN (DIRECTIONAL ARROWS WHERE INDICATED)	- - - -
	EMERGENCY LIGHTING UNIT	8'-0"AFF
	WALL MOUNT LIGHT FIXTURE – TYPE AS NOTED	

NOTES:
1.) REFERENCE LIGHT FIXTURE SCHEDULE FOR ALL MOUNTING HEIGHTS.

INTRUSION DETECTION SYMBOL LEGEND:

SYMBOL	DESCRIPTION	MNTG. HT. UNO (SEE NOTE 1)
MD	INTRUSION DETECTION MOTION DETECTOR FULL COVERAGE TYPE – PROVIDE BACKBOX WITH 1/2"C AND PULLWIRE.	9'-0"AFF
MD H	INTRUSION DETECTION MOTION DETECTOR HALLWAY COVERAGE TYPE – PROVIDE BACKBOX WITH 1/2"C AND PULLWIRE.	9'-0"AFF
GB	INTRUSION DETECTION GLASS BREAK SENSOR	ABV. CLG.
KP	INTRUSION DETECTION KEYPAD PROVIDE WITH STI COVER – PROVIDE BACKBOX WITH 1/2"C AND PULLWIRE.	48"AFF
DC	INTRUSION DETECTION DOOR MAGNETIC CONTACT – PROVIDE WITH 1/2"C AND PULLWIRE.	- - - -
DC OH	INTRUSION DETECTION OVERHEAD DOOR MAGNETIC CONTACT – PROVIDE BACKBOX WITH 1/2"C AND PULLWIRE.	- - - -

NOTES:
1.) 48" AFF INDICATES TO TOP OF DEVICE;
ALL OTHER MOUNTING HEIGHTS REFER TO CENTERLINE OF DEVICE.
PRIOR TO ANY ROUGH-IN COORDINATE EXACT LOCATION OF BACK BOXES WITH OWNER/INTRUSION SYSTEM SUPPLIER.

GYMNASIUM SOUND REINFORCEMENT SYSTEMS SYMBOL LEGEND:

SYMBOL	DESCRIPTION	MNTG. HT. UNO (SEE NOTE 1)
M	MICROPHONE OUTLET – PROVIDE BACKBOX WITH 1/2"C AND PULLWIRE.	18"AFF
S P	GYMNASIUM CEILING SPEAKER – PROVIDE BACKBOX WITH 1/2"C AND PULLWIRE.	- - - -
	AMPLIFIER (SURFACE MOUNTED)	- - - -

NOTES:
1.) 18" AFF INDICATES TO TOP OF DEVICE;
ALL OTHER MOUNTING HEIGHTS REFER TO CENTERLINE OF DEVICE.
ALL WIRING SHALL BE IN RACEWAY AND CONCEALED IN WALLS AND ABOVE CEILINGS. TERMINATE RACEWAYS AT AMPLIFIER. EXPOSED RACEWAYS ARE NOT ALLOWED.

INTERCOM SYSTEMS SYMBOL LEGEND:

SYMBOL	DESCRIPTION	MNTG. HT. UNO (SEE NOTE 1)
S	INTERCOM OUTDOOR HORN WEATHER PROOF – PROVIDE BACKBOX W/ 1/2"C AND PULLWIRE.	9'-6"AFF
B	INTERCOM BUTTON – PROVIDE BACKBOX WITH 1/2"C AND PULLWIRE .	48"AFF
S	INTERCOM SPEAKER CEILING MOUNT	CLG.
S	INTERCOM SPEAKER CEILING MOUNT	CLG.
H	INTERCOM ADMINISTRATION CONTROL STATION HANDSET – PROVIDE BACKBOX WITH 1/2"C AND PULLWIRE STUBBED INTO ACCESSIBLE CLG.	18"AFF

NOTES:
1.) 48" AFF INDICATES TO TOP OF DEVICE;
ALL OTHER MOUNTING HEIGHTS REFER TO CENTERLINE OF DEVICE.
PRIOR TO ANY ROUGH-IN COORDINATE EXACT LOCATION OF BACK BOXES WITH OWNER/INTERCOM SYSTEM SUPPLIER.

CCCTV SYSTEM SYMBOL LEGEND:

SYMBOL	DESCRIPTION	MNTG. HT. UNO (SEE NOTE 1)
	SECURITY CAMERA – PROVIDE BACK BOX WITH 1" RACEWAY STUBBED INTO ACCESSIBLE CLG. WITH PULL WIRE.	15'-0"AFF

NOTES:
1.) PRIOR TO ANY ROUGH-IN COORDINATE EXACT LOCATION OF BACK BOXES WITH OWNER/CCTV SYSTEM SUPPLIER.

No.	REVISIONS	BY

GMS ARCHITECTS
1150 Paredes Line Rd.
Brownsville TX 78526
(956) 546-0110
fax (956) 546-0196

BISD Hanna ECHS Gymnasium Facility

STATE OF TEXAS
RAY PEYNADO
125390
LICENSED PROFESSIONAL ENGINEER
06.12.2019

© Copyright 2019
Gomez Mendez Saenz Inc.
Architects-Planners
Interior Designers

Date: June 12, 2019
Scale: As Noted
Project Architect: David Monreal, AIA
Drawn By: ETHOS
Job No: BISD Hanna Gymnasium
Sheet: E2.01

ethos engineering
119 W. VAN BUREN AVE. STE.101
HARLINGEN, TX
PHONE: 956-230-3435
TEXAS REGISTERED
ENGINEERING FIRM
F-15998

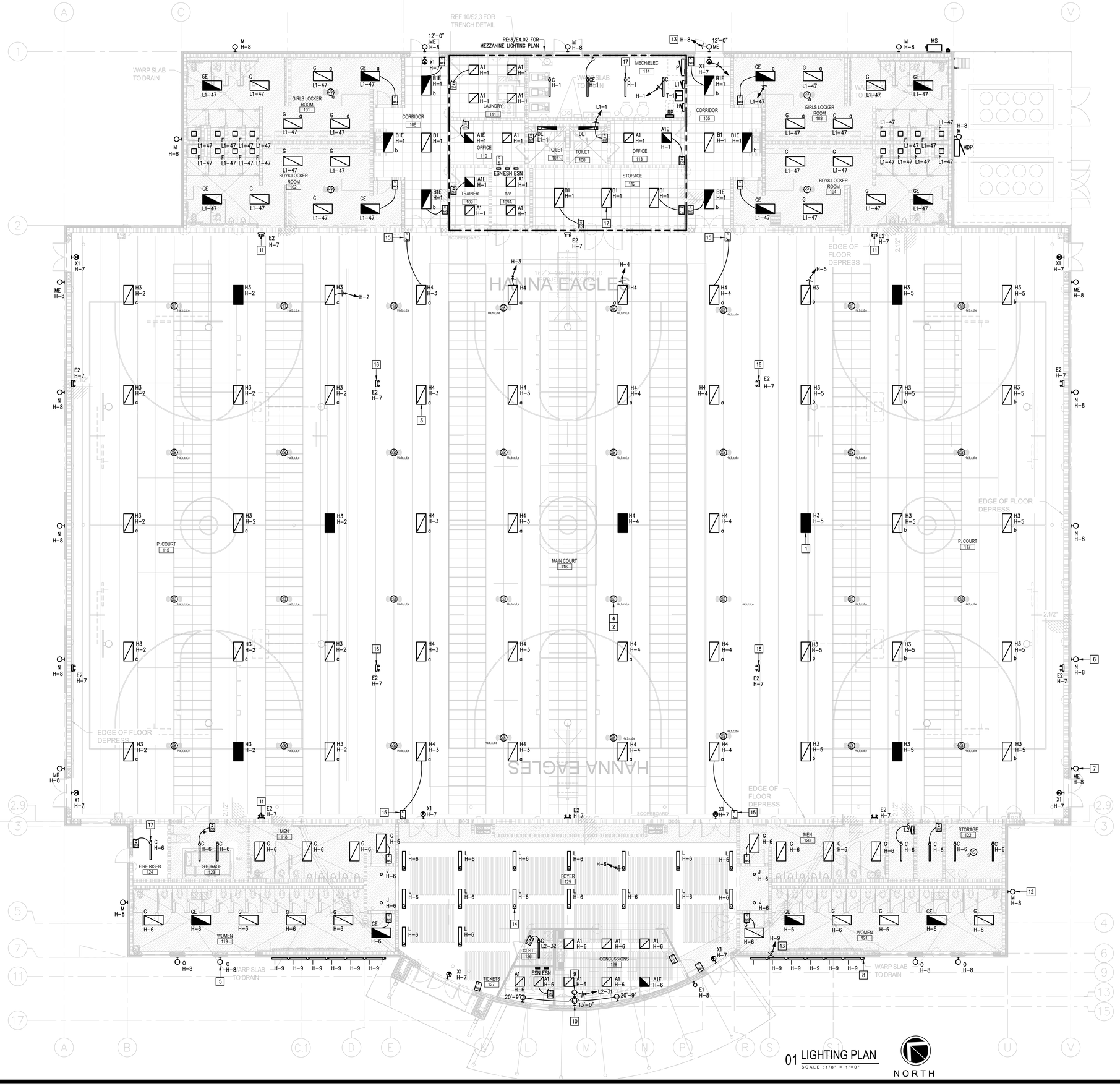

GENERAL NOTES:

1. LIGHTING BRANCH CIRCUIT HOMERUNS SHALL BE 3/4" – 2#12 & #12G. 20A/277V HOMERUNS EXCEEDING 200FT THE WIRE SIZE SHALL BE #10 & #8 FOR 275'.
2. INTERIOR LIGHTING CONTROLS SHALL BE BY VACANCY SENSORS.
3. PROVIDE 0–10V SIGNAL WIRING TO EACH DIMMED LIGHT FIXTURE DRIVER AND WALL SWITCH.
4. EXTERIOR LIGHTING CONTROLS SHALL BE BY LIGHTING MANAGEMENT PANEL.
5. PAINT ALL EXPOSED RACEWAYS, HANGERS, BOXES, SUPPORTS AND ACCESSORIES IN INTERIOR AND EXTERIOR EXPOSED AREAS. COORDINATE PAINT TYPE, COLOR AND SCOPE OF WORK WITH ARCHITECT.

KEYED NOTES:

1. NIGHT LIGHT TO REMAIN UNSWITCHED – TYPICAL.
2. MOUNT TO BOTTTOM OF STRUCTURE STEEL – TYPICAL.
3. SEE DETAIL 01/E8.01 FOR MOUNTING.
4. REFER TO LIGHTING CONTROLS ONE-LINE DIAGRAM FOR ALL WIRING REQUIREMENTS – TYPICAL.
5. WALL MOUNT LIGHT FIXTURE TYPE "O" AT 8'–0"AFF TO CENTER OF FIXTURE – TYPICAL.
6. WALL MOUNT LIGHT FIXTURE TYPE "N" AT 24'–0"AFF TO CENTER OF FIXTURE (UNO) – TYPICAL.
7. WALL MOUNT LIGHT FIXTURE TYPE "ME" AT 8'–0"AFF TO CENTER OF FIXTURE (UNO) – TYPICAL.
8. WALL MOUNT LIGHT FIXTURE TYPE "I" AT 13'–8"AFF TO TOP OF FIXTURE – TYPICAL.
9. CONNECT LOGO SIGN POWER SUPPLIES ABOVE CEILING. COORDINATE EXACT LOCATION WITH SIGN CONTRACTOR.
10. PROVIDE J–BOX AND 3/4" RACEWAY ROUTED ABOVE CEILING BACK TO LOGO SIGN POWER SUPPLIES LOCATION. COORDINATE EXACT LOCATIONS WITH SIGN CONTRACTOR PRIOR TO ANY ROUGH–IN. INDICATED HEIGHT IS APPROXIMATE – TYPICAL OF 3.
11. WALL MOUNT FIXTURE TYPE "E2" AT 12'–0" A.F.F. (U.N.O.) TO CENTER OF FIXTURE – TYPICAL.
12. WALL MOUNT LIGHT FIXTURE TYPE "M" AT 12'–0"AFF TO CENTER OF FIXTURE – TYPICAL.
13. CONNECT VIA LUTRON "QS" LINK.
14. SUSPEND LIGHT FIXTURE TYPE "L" AT 20'–0"AFF TO BOTTOM OF FIXTURE – TYPICAL.
15. PROVIDE CLEAR LOCKING COVER.
16. PROVIDE PENDANT MOUNTED. BOTTOM OF FIXTURE TO ALIGN WITH BOTTOM OF STRUCTURE STEEL JOIST. SEE DETAIL 01/E8.01.
17. PROVIDE UNISTRUT SUPPORT AND THREADED RODS TO SUSPEND LIGHT FIXTURE AT 9'–0"AFF. COORDINATE INSTALLATION WITH HVAC DUCT WORK.

01 LIGHTING PLAN
SCALE : 1/8" = 1'=0"

NORTH

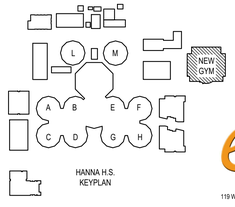

No.	REVISIONS	BY

GMS ARCHITECTS
1150 Paredes Line Rd.
Brownsville TX 78526
(956) 546-0110
fax (956) 546-0196

BISD Hanna ECHS
Gymnasium Facility

RAY PEYNADO
125390
06.12.2014

© Copyright 2019
Gomez Mendez Saenz Inc.
Architects-Planners
Interior Designers

Date:	June 12, 2019
Scale:	As Noted
Project Architect:	David Monreal, AIA
Drawn By:	ETHOS
Job No.	BISD Hanna Gymnasium
Sheet:	E3.01

ethos engineering
119 W. VAN BUREN AVE. STE:101
HARLINGEN, TX.
PHONE: 956-230-3435
TEXAS REGISTERED
ENGINEERING FIRM
F-15998

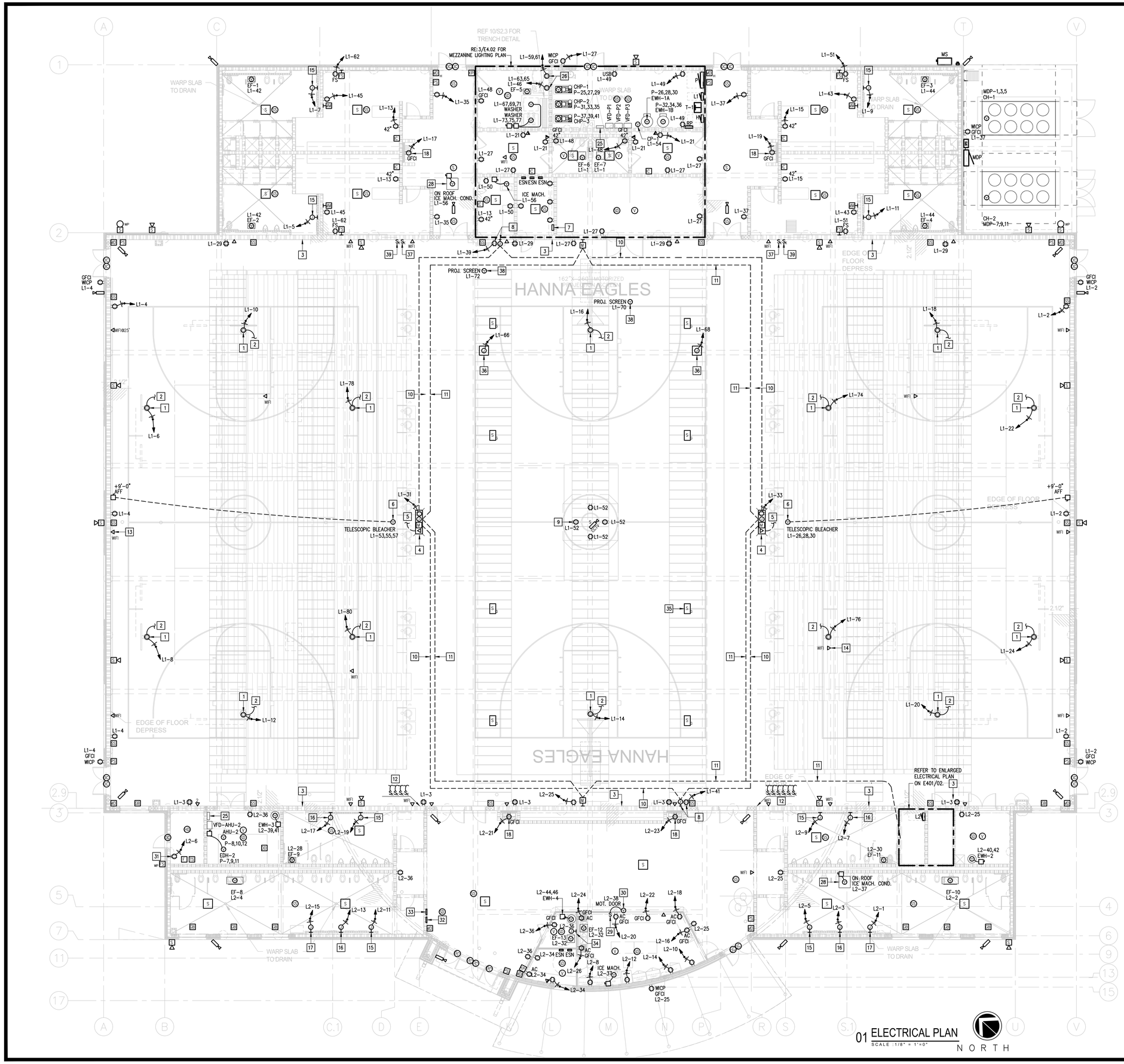

01 ELECTRICAL PLAN
SCALE: 1/8" = 1'-0"

02 ELECTRICAL PLAN
SCALE: 1/4" = 1'-0"

GENERAL NOTES:

1. ELECTRICAL BRANCH CIRCUIT HOMERUNS SHALL BE 3/4" – 2#12 & #12G. 20A/120V HOMERUNS EXCEEDING 100FT, THE WIRE SIZE SHALL BE #10 & #8 FOR 175'.
2. HOMERUNS – INSTALL NO MORE THAN THREE PER RACEWAY (INCLUDING LIGHTING BRANCH CIRCUITS).
3. PROVIDE ALL ELECTRICAL RECEPTACLES INSTALLED WITH THE GROUND OPENING IN THE "UP" POSITION.
4. SPECIAL SYSTEMS (FIRE ALARM, INTRUSION DETECTION, VOICE, DATA, INTERCOM, ETC.) BACK BOX AND RACEWAYS LOCATED IN EXPOSED CEILING AREAS SHALL TERMINATE AT NEAREST CONCEALED CEILING OR CABLE TRAY. EXPOSED CABLING IS ONLY ALLOWED IN AREAS WHERE CABLING CAN BE CONCEALED ABOVE ACCESSIBLE CEILING SPACE WITH J-HOOKS.
5. PROVIDE FIRE STOPPING AT ALL FIRE WALL PENETRATIONS; PROVIDE EXPANSION PLATES & BONDING JUMPERS AT BUILDING EXPANSION JOINTS.
6. PROVIDE 1-2" RACEWAY (SLEEVE) 12" ABOVE CEILING AT ALL ROOMS . DOORS THAT LEAD TO CORRIDORS (FLOOR TO CEILING WALLS) FOR SPECIAL SYSTEMS WIRING.
7. USE TAMPER RESISTANT RECEPTACLES THROUGHOUT.

KEYED NOTES:

1. ATTACH RECEPTACLE TO THE CEILING STRUCTURE STEEL & CONNECT MOTORIZED BACKSTOP. VERIFY POINT OF CONNECTION W/ BACKSTOP SUPPLIER PRIOR TO ROUGH-IN.
2. TO MOTORIZED BACKBOARD KEYED SWITCH – SEE DETAIL. FURNISHED BY BACKSTOP SUPPLIER; INSTALLED & CONNECTED BY ELECTRICAL CONTRACTOR.
3. PROVIDE AN EXTENSION RING ON WIRING DEVICES LOCATED ON THIS WALL TO INSTALL FLUSH MOUNTED WITH PROTECTIVE PADDING.
4. INSTALL DEVICES INSIDE FLUSH MOUNTED FLOORBOX. COORDINATE THE SCORE KEEPERS TABLE EXACT LOCATION PRIOR TO ROUGH-IN (COVER PLATE FLUSH MOUNTED).
5. PROVIDE 1.25" RACEWAY W/ PULLWIRE (DATA). STUB-UP RACEWAY IN WALL CAVITY BEHIND DATA RACK TO AN ACCESSIBLE LOCATION ABOVE CEILING.
6. CONNECT MOTORIZED TELESCOPIC BLEACHERS. COORDINATE EXACT POINT OF CONNECTION AND LOCATION OF SAFETY SWITCH BELOW BLEACHERS WITH EQUIPMENT SUPPLIER PRIOR TO ANY ROUGH-IN. SEE CONNECTION SCHEDULE.
7. PROVIDE WALL MOUNTED AMPLIFIER. BRANCH CIRCUIT: 1/2" – 2#12 & #12G, L1-23.
8. CONNECT WALL MOUNT SCOREBOARD. SEE ARCHITECT DRAWINGS FOR EXACT LOCATION.
9. CONNECT SUSPENDED SCOREBOARD. SECURE WIRING DEVICE TO STRUCTURE STEEL – TYPICAL OF 4.
10. PROVIDE 3/4" RACEWAY W/ PULLWIRE (SCOREBOARD CONTROLS).
11. PROVIDE 1.25" RACEWAY W/ PULLWIRE (P.A. SYSTEM).
12. TO CONTROL MOTORIZED BACKBOARDS.
13. MOUNT AT 15' AFF. STUB-OUT CONDUIT TO NEAREST ACCESSIBLE CEILING SPACE TO ALLOW FOR CABLING TO MDF/IDF ROOM – TYPICAL.
14. MOUNT TO BOTTOM OF STEEL JOIST. STUB-OUT CONDUIT TO NEAREST ACCESSIBLE CEILING SPACE TO ALLOW FOR CABLING TO MDF/IDF ROOM.
15. PROVIDE INFRARED RECESSED MOUNTED HAND DRYER. HAND DRYER SHALL BE BOBRICK B-750 (NO SUBSTITUTION). BRANCH CIRCUIT: 3/4" C 2#10 & #10G. MOUNT @ +38" A.F.F. (BOTTOM). VERIFY THE EXACT LOCATION WITH THE ARCHITECTURAL PLANS.
16. PROVIDE INFRARED RECESSED MOUNTED HAND DRYER. HAND DRYER SHALL BE BOBRICK B-750 (NO SUBSTITUTION). BRANCH CIRCUIT: 3/4" CC 2#10 & #10G. MOUNT @ +43" A.F.F. (BOTTOM). VERIFY THE EXACT LOCATION WITH THE ARCHITECTURAL PLANS.
17. PROVIDE INFRARED RECESSED MOUNTED HAND DRYER. HAND DRYER SHALL BE BOBRICK B-750 (NO SUBSTITUTION). BRANCH CIRCUIT: 3/4" CC 2#10 & #10G. MOUNT @ +46" A.F.F. (BOTTOM). VERIFY THE EXACT LOCATION WITH THE ARCHITECTURAL PLANS.
18. CONNECT ELECTRIC DRINKING FOUNTAIN. ROUGH-IN AT 17-7/16" TO CENTER OF J-BOX – TYPICAL. COORDINATE WITH PLUMBING CONTRACTOR.
19. CONNECT DATA RACK.
20. PROVIDE 3/4" X 4' X 4', PLYWOOD TELEPHONE/DATA BOARD ON ALL WALLS. FIRE RESISTIVE TREATED (A-D INT-APA). MOUNT AT 6" BELOW CEILING.
21. PROVIDE GROUND BUS BAR. REFER TO GROUNDING ELECTRICAL RISER DIAGRAM.
22. PROVIDE INTRUSION DETECTION SYSTEM PANEL; BRANCH CIRCUIT: 1/2" – 2#12 & #12G, L2-35.
23. PROVIDE FIRE ALARM CONTROL PANEL WITH EMERGENCY VOICE SYSTEM; BRANCH CIRCUIT: 1/2" – 2#12 & #12G, L2-33. PROVIDE TWO TELEPHONE CONNECTIONS.
24. DATA RACK – PROVIDED BY OWNER.
25. CONNECT HVAC DDC CONTROL PANEL TO NEAREST 120V, 20A/1P SPARE BREAKER.
26. PROVIDE SPECIAL RECEPTACLE FOR DRYER (NEMA 10-30R); BRANCH CIRCUIT: 3/4" – 3#10 & #10G.
27. NOT USED.
28. CONNECT ICE MACHINE REMOTE CONDENSER ON ROOF. OBTAIN POWER FROM ICE MACHINE. ROUTE CONNECTION THROUGH ROOF PENETRATION – SEE ARCHITECTURAL DRAWINGS.
29. CONNECT AND INSTALL ROLLING MOTORIZED DOOR SWITCH. SWITCH PROVIDED BY OTHERS.
30. CONNECT ROLLING MOTORIZED DOOR; BRANCH CIRCUIT: 1/2" – 2#10 & #10G. COORDINATE POINT OF CONNECTION WITH SUPPLIER.
31. CONNECT FLOW SWITCH.
32. FIRE ALARM REMOTE ANNUNCIATOR (FLUSH MOUNTED) FACING LOBBY. COORDINATE WITH FIRE ALARM CONTRACTOR.
33. PROVIDE FIRE ALARM VOICE EVACUATION REMOTE MICROPHONE (FLUSH MOUNTED) FACING LOBBY. COORDINATE WITH FIRE ALARM CONTRACTOR.
34. CONNECT ELECTRONIC PRIMER. COORDINATE EXACT LOCATION WITH PLUMBING CONTRACTOR.
35. SEE MOUNTING DETAIL 01/E8.01 – TYPICAL.
36. PROVIDE CEILING MOUNTED SCISSOR LIFT AND PROJECTOR. SEE DETAIL 12/E8.01.
37. PROVIDE SCISSOR LIFT KEYED SWITCH DRAPER MODEL NO. SP-KSM AT 48"AFF.
38. CONNECT MOTORIZED PROJECTOR SCREEN. COORDINATE POINT OF CONNECTION WITH SUPPLIER.
39. CONNECT AND INSTALL MOTORIZED PROJECTOR SCREEN SWITCH. SWITCH PROVIDED BY OTHERS.

No.	REVISIONS	BY

GMS ARCHITECTS
1150 Paredes Line Rd.
Brownsville TX 78526
(956) 546-0110
fax (956) 546-0196

BISD Hanna ECHS Gymnasium Facility

RAY REYNADO
125390
06.12.2019

© Copyright 2019
Gomez Mendez Saenz Inc.
Architects-Planners
Interior Designers

Date: June 12, 2019
Scale: As Noted
Project Architect: David Monreal, AIA
Drawn By: ETHOS
Job No.: BISD Hanna Gymnasium
Sheet: E4.01

ethos engineering
119 W. VAN BUREN AVE. STE.101
HARLINGEN, TX
PHONE: 956-230-3435
TEXAS REGISTERED
ENGINEERING FIRM
F-15998

GENERAL NOTES:

1. BRANCH CIRCUIT HOMERUNS SHALL BE 3/4" – 2#12 & #12G. 20A/120V HOMERUNS EXCEEDING 100FT, THE WIRE SIZE SHALL BE #10 & #8 FOR 175'.
2. HOMERUNS – INSTALL NO MORE THAN THREE PER RACEWAY(INCLUDING LIGHTING BRANCH CIRCUITS).
3. PROVIDE ALL ELECTRICAL RECEPTACLES INSTALLED WITH THE GROUND OPENING IN THE "UP" POSITION.
4. PROVIDE J-HOOKS TO SUPPORT THE FIRE ALARM, INTRUSION DETECTION, VOICE, INTERCOM AND DATA CABLING.
5. PROVIDE FIRE STOPPING AT ALL FIRE WALL PENETRATIONS; PROVIDE EXPANSION PLATES & BONDING JUMPERS AT BUILDING EXPANSION JOINTS.
6. USE TAMPER RESISTANT RECEPTACLES THROUGHOUT.

KEYED NOTES:

1. PROVIDE UNISTRUT SUPPORT AND THREADED RODS TO SUSPEND LIGHT FIXTURE AT 9'-0"AFF. COORDINATE INSTALLATION WITH HVAC DUCT WORK – TYPICAL.
2. CONNECT HVAC DDC CONTROL PANEL TO NEAREST 120V, 20A/1P SPARE BREAKER.
3. WALL MOUNT LIGHT FIXTURE TYPE "ME" AT 8'-0" ABOVE ROOF FLOOR TO CENTER OF FIXTURE (UNO) – TYPICAL.
4. CONNECT ELECTRONIC PRIMER. COORDINATE EXACT LOCATION WITH PLUMBING CONTRACTOR.

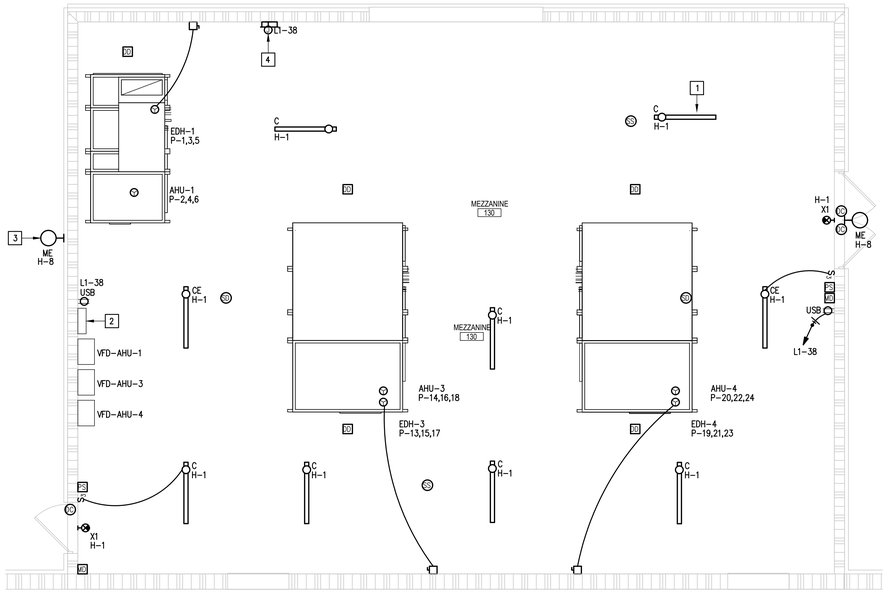

01 LIGHTING AND ELECTRICAL MEZZANINE PLAN

SCALE :1/4" = 1'-0"

NORTH

No.	REVISIONS	BY

GMS ARCHITECTS

1150 Paredes Line Rd.
Brownsville TX 78526
(956) 546-0110
fax (956) 546-0196

BISD Hanna ECHS
Gymnasium Facility

STATE OF TEXAS
RAY PEYNADO
125390
LICENSED
ARCHITECT

06.12.2019

© Copyright 2019
Gomez Mendez Saenz Inc.
Architects-Planners
Interior Designers

Date:	June 12, 2019
Scale:	As Noted
Project Architect:	David Monreal, AIA
Drawn By:	ETHOS
Job No.	BISD Hanna Gymnasium
Sheet:	E4.02

ethos engineering

119 W. VAN BUREN AVE. STE.101
HARLINGEN, TX
PHONE: 956-230-3435
TEXAS REGISTERED
ENGINEERING FIRM
F-15998

01 TYPE A1 □ A1E
SCALE : NOT TO SCALE

02 TYPE B1 □ B1E
SCALE : NOT TO SCALE

03 TYPE C, CE
SCALE : NOT TO SCALE

04 TYPE D
SCALE : NOT TO SCALE

05 TYPE E1
SCALE : NOT TO SCALE

06 TYPE E2
SCALE : NOT TO SCALE

07 TYPE F
SCALE : NOT TO SCALE

08 TYPE G, GE
SCALE : NOT TO SCALE

09 TYPE H3 □ H4
SCALE : NOT TO SCALE

10 TYPE I
SCALE : NOT TO SCALE

11 TYPE J
SCALE : NOT TO SCALE

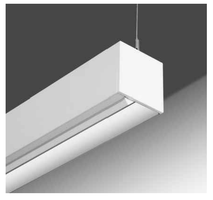

12 TYPE L
SCALE : NOT TO SCALE

13 TYPE M □ ME
SCALE : NOT TO SCALE

14 TYPE N
SCALE : NOT TO SCALE

15 TYPE O
SCALE : NOT TO SCALE

15 TYPE R1
SCALE : NOT TO SCALE

16 TYPE X1
SCALE : NOT TO SCALE

LUMINAIRE SCHEDULE

CALLOUT	LAMP	DESCRIPTION	DRIVER	MOUNTING	MODEL	INPUT WATTS	VOLTS	NOTE	LUMENS
A1	LED	2'x2' LAY-IN FLAT PANEL	0-10V	RECESSED	LITHONIA: EPANL 2X2 3400LM 40K ZT MVOLT LEDALUX: ECOPNL-2X2-40-U-4K	30	277V 1P 2W		3479
A1E	LED	2'x2' LAY-IN FLAT PANEL	0-10V	RECESSED	LITHONIA: EPANL 2X2 3400LM 40K ZT MVOLT EL14L LEDALUX: ECOPNL-2X2-40-U-4K-BU	30	277V 1P 2W	PROVIDE WITH AN EMERGENCY BATTERY PACK.	3479
B1	LED	24" X 48" SEALED LAY-IN TROFFER	0-10V	RECESSED	LITHONIA: 2GTL F4 48L FW PCL12187 SWL EZ1 ABC LP840 LSI: GA24-LED-SS-NW-UE-TG-PC187	47	277V 1P 2W	PROVIDE WITH .187" POLYCARBONATE DIFFUSER AND WITH AN ALUMINUM DOOR & ADDITIONAL GASKETING.	5439
B1E	LED	24" X 48" SEALED LAY-IN TROFFER	0-10V	RECESSED	LITHONIA: 2GTL F4 48L FW PCL12187 SWL EZ1 EL14L ABC LP840 LSI: GA24-LED-SS-NW-UE-TG-PC187-EM	47	277V 1P 2W	PROVIDE WITH .187" POLYCARBONATE DIFFUSER AND WITH AN ALUMINUM DOOR & ADDITIONAL GASKETING.	5439
C	LED	STRIP LIGHT	0-10V	SURFACE	LITHONIA: ZL1N L48 3000LM FST MVOLT 40K 80CRI WH LSI: SDL 2 LED LW NW UE	31	120V 1P 2W 277V 1P 2W		3438
CE	LED	STRIP LIGHT	0-10V	SURFACE	LITHONIA: ZL1N L48 3000LM FST MVOLT 40K 80CRI E7W WH LSI: SDL 2 LED LW NW UE EM	25	277V 1P 2W	PROVIDE WITH AN EMERGENCY BATTERY PACK.	3438
DE	LED	WALL BRACKET	0-10V	WALL	LITHONIA: 2GTL F 4 40L EZ1 EL14L LP840 LSI: W44-LED-HO-NW-UE-EM	32	120V 1P 2W	PROVIDE WITH AN EMERGENCY BATTERY PACK.	4079
E1	(2) XENON	EMERGENCY LIGHTING UNIT		WALL	LITHONIA: AFN _ X PREM MULE LIGHTING: MAKO-3 X SD	2	277V 1P 2W	PROVIDE WITH A NI-CAD BATTERY PACK & SELF DIAGNOSTICS. STANDARD FINISH TO BE SELECTED AT A LATER DATE.	0
E2	INC.	EMERGENCY LIGHTING UNIT		WALL	LITHONIA: IND12100 W H5012S SEL ISOLITE: ELN12 LC120 2 X	20	277V 1P 2W	PROVIDE WITH A WIREGUARD, SELF-DIAGNOSTICS, LOAD DISCONNECT, & TIME DELAY. PROVIDE PENDANT MOUNT KIT ELA IND PM WHERE DESIGNATED ON DRAWINGS.	0
F	LED	SURFACE MOUNTED SQUARE	0-10V	SURFACE	KENALL: MS11FL-PP-MW-10L40K-DV LUMINAIRE LED: SWP1212-15W-4000K-120-277-CP-WHT-DIM	13	120V 1P 2W		1307
G	LED	FLANGE TROFFER	0-10V	CEILING	LITHONIA: 2VRTL F L48 5000LM ICW AP125FL MVOLT GZ1 40K 80CRI WH CERTOLUX: VRF-3836 2X4 C/14GHA. CRS -LED 8 40K 52L UNV - P43/.187	47	120V 1P 2W 277V 1P 2W		5200
GE	LED	FLANGE TROFFER	0-10V	CEILING	LITHONIA: 2VRTL F L48 5000LM ICW AP125FL MVOLT GZ1 40K 80CRI PS1050 WH CERTOLUX: VRF-3836 2X4 C/14GHA. CRS -LED 8 40K 52L UNV - P43/.187 B39	47	120V 1P 2W 277V 1P 2W	PROVIDE BATTERY PACK.	5200
H3	LED	HIGH BAY	0-10V	SURFACE	LITHONIA: IBG 4FT 36000LM SEF WD AFL 40K 80CRI LSI: ALI4-LEDHE-36L-DA-W-UNV-DIM-40	221	277V 1P 2W	PROVIDE WITH A .125 FROSTED POLYCARB LENS AND A WIRE GUARD.	33203
H4	LED	HIGH BAY	0-10V	SURFACE	LITHONIA: IBG 4FT 48000LM SEF WD AFL 40K 80CRI LSI: ALI4-LEDHE-48L-DA-W-UNV-DIM-40	293	277V 1P 2W	PROVIDE WITH A .125 POLYCARB LENS AND A WIRE GUARD.	45973
I	LED	LINEAR WALL WASHER	0-10V	ARM	LUMENPULSE: LOGP HO-10FT-120V-48-40K-WW-WAM18-X-DIM IGUZZINI: I.BB72-120V-15 / I.5577	62	277V 1P 2W	PROVIDE UL LISTED FOR WET LOCATIONS, MOUNTING ARMS & WITH JUMPER CABLES.	3592
J	LED	6" DOWNLIGHT	0-10V	RECESSED	LITHONIA: WF6 LED 40K MW JESCO: RLH-60-12-JB-RIC-4080-WH/WH	13	277V 1P 2W		1200
L	LED	4' SUSPENDED LIGHT	0-10V	PENDANT	FINELITE: HP-4 ID X SO HO 4000K	9	277V 1P 2W		1566
M	LED	WALL SCONCE	0-10V	SURFACE	LITHONIA: WSR LED 1 10A700/40K SR4 MVOLT X RAYON: T650LED DL 30 UN112 40 WT	22	277V 1P 2W	PROVIDE UL LISTED FOR WET LOCATIONS. STANDARD COLOR FINISH TO BE SELECTED AT A LATER DATE.	2053
ME	LED	WALL SCONCE	0-10V	SURFACE	LITHONIA: WSR LED 1 10A700/40K SR4 MVOLT ELCW X RAYON: T650LED DL 30 UN112 40 WT EM	22	277V 1P 2W	PROVIDE UL LISTED FOR WET LOCATIONS AND WITH AN EMERGENCY BATTERY PACK. STANDARD COLOR FINISH TO BE SELECTED AT A LATER DATE.	2053
N	LED	WALLPACK	0-10V	SURFACE	LITHONIA: WSR LED 2 10A700/40K SR4 MVOLT X RAYON: T650LED DL 45 UN112 40 WT MTO	45	277V 1P 2W	PROVIDE UL LISTED FOR WET LOCATIONS. STANDARD COLOR FINISH TO BE SELECTED AT A LATER DATE.	2863
O	LED	WALL SCONCE	0-10V	SURFACE	BEGA: 66519 CON-TECH: CYL6-4-40K-MVD-UD-X-M-CLR-X	36	277V 1P 2W	PROVIDE UL LISTED FOR WET LOCATIONS. STANDARD COLOR FINISH TO BE SELECTED AT A LATER DATE.	2600
R1	LED	BOLLARD	0-10V	SURFACE	BEGA: 99778 WITH 99624 TUBE	34	277V 1P 2W	PROVIDE U.L. LISTED FOR WET LOCATION. STANDARD COLOR FINISH TO BE SELECTED AT A LATER DATE.	398
X1	LED	SINGLE SIDED EXIT SIGN		WALL/CEILING	BEGHELLI: FTZ-SA-LR1-UWW MULE LIGHTING: WLCX-1-R-W-U-SD	3	277V 1P 2W	PROVIDE WITH A UNIVERSAL MOUNTING CANOPY, LIGHT EMITTING DIODES, & A NI-CAD BATTERY PACK.	0

GENERAL NOTES:
1. OTHER LIGHT FIXTURE MANUFACTURERS THAN THOSE LISTED ON THIS SCHEDULE ARE REQUIRED TO OBTAIN PRIOR APPROVAL BY SUBMITTING CUT SHEETS OF THEIR SUBSTITUTIONS AT LEAST (10) DAYS PRIOR TO BID. CUT SHEETS SHALL INDICATE/HIGHLIGHT PHOTOMETRIC CURVE, EFFICIENCY & CONSTRUCTION FOR DIRECT COMPARISON.
2. EXTRA MATERIALS: SEE SPECIFCATIONS.
3. EMERGENCY BATTERY PACKS SHALL BE COMPLETE FACTORY INSTALLED WITH NI-CAD BATTERY, CHARGER INDICATING LIGHT, ELECTRONIC CIRCUITRY, 1400 LUMENS OUTPUT, 90 MINUTES DURATION & FIVE FULL YEARS WARRANTY.
4. FURNISH ALL 2' X 4' AND 2' X 2' LAY-IN LIGHT FIXTURES WITH INTEGRAL CEILING CLIPS.

ethos engineering
119 W. VAN BUREN AVE. STE.101
HARLINGEN, TX
PHONE: 956-230-3435
TEXAS REGISTERED
ENGINEERING FIRM
F-15998

No.	REVISIONS	BY

GMS ARCHITECTS
1150 Paredes Line Rd.
Brownsville TX 78526
(956) 546-0110
fax (956) 546-0196

BISD Hanna ECHS
Gymnasium Facility

STATE OF TEXAS
RAY PEYNADO
125390
LICENSED
ARCHITECT
06.12.2019

© Copyright 2019
Gomez Mendez Saenz Inc.
Architects-Planners
Interior Designers

Date: June 12, 2019
Scale: As Noted
Project Architect: David Monreal, AIA
Drawn By: ETHOS
Job No. BISD Hanna Gymnasium
Sheet: E5.01

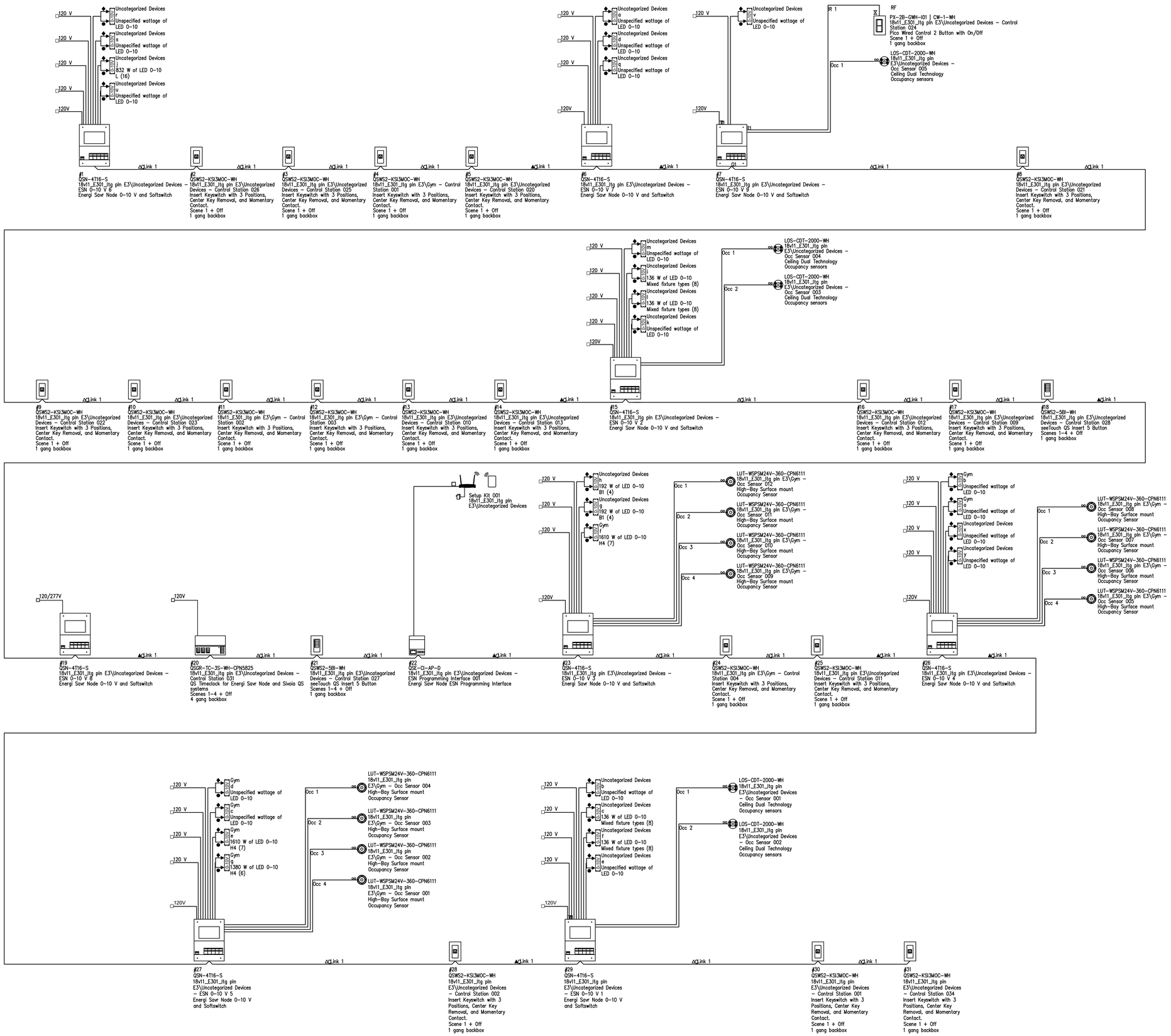

Wire Legend

- QS Control Link (Connect wires 1, 2, 3 and 4)*
- QS Control Link (Connect wires 1, 3 and 4. Do not connect wire 2)*
- Panel Control Link (Connect wires 1, 2, 3, 4 and 5)*
- Panel Control Link (Connect wires 1, 2, 3 and 4. Do not connect wire #5)*
- Panel Control Link (Connect wires 1, 3, 4 and 5. Do not connect wire #2)*
- QS Sivoia Shade Control Link*
- Belden Cable 1387LA(Or Equivalent)
- Normal Input Power 2 #12 AWG (4 sq mm) + ground
- Normal-Emergency Input Power 2 #12 AWG (4 sq mm) + ground
- 3 Phase 4 wire Input Power, 4 #12 AWG (4 sq mm) + ground
- 2 #12 AWG (4 sq mm) + ground
- 3 #12 AWG (4 sq mm) + ground
- 0–10 V Signal: 2#18AWG (1.0 sq mm)
- 2#18 AWG (1.0 sq mm)
- 3#18 AWG (1.0 sq mm)
- EcoSystem Bus/Loop*
- DALI Loop
- Lutron Sensor Cable C-CBL-522S or use 4#22 AWG (1.0 sq mm)
- Lutron Sensor Cable C-CBL-522S or use 3#22 AWG (1.0 sq mm)
- DMX Cable. Use Lutron GRX-CBL-DMX-250/GRX-CBL-DMX-500 or Belden #9729 (Non-plenum) or Belden #89729 (Plenum) or Duro Flex 22/4 WA Cable.
- Ethernet cable. CAT5E or better cable for Lutron Network terminated with RJ45 connectors (not provided by Lutron). 328 ft (100 m) maximum run.
- Fiber optic cable for Lutron Network terminated with appropriate fiber optic connectors (not provided by Lutron). Requires dedicated fiber optic link (single-mode or multi-mode)

RF Connection
Wired Connection

No.	REVISIONS	BY

GMS ARCHITECTS
1150 Paredes Line Rd.
Brownsville TX 78526
(956) 546-0110
fax (956) 546-0196

BISD Hanna ECHS
Gymnasium Facility

STATE OF TEXAS
RAY PEYNADO
125390
06.12.2019

© Copyright 2019
Gomez Mendez Saenz Inc.
Architects-Planners
Interior Designers

Date: June 12, 2019
Scale: As Noted
Project Architect: David Monreal, AIA
Drawn By: ETHOS
Job No. BISD Hanna Gymnasium
Sheet: E5.02

ethos engineering
119 W. VAN BUREN AVE. STE.101
HARLINGEN, TX
PHONE 956-230-3435
TEXAS REGISTERED
ENGINEERING FIRM
F-15998

ENERGI SAVER NODE
SN-4T16S

01 SCALE : NOT TO SCALE

WALL SWITCH
MS-OPS6-DDV-WH

02 SCALE : NOT TO SCALE

WALL SENSOR SWITCH
MS-Z101-WH

03 SCALE : NOT TO SCALE

WALL SWITCH
PX-2B-GXX-I01

04 SCALE : NOT TO SCALE

TIME CLOCK
SGR-TC-3S-WH-CPN5825

05 SCALE : NOT TO SCALE

WALLSTATION
SWS2-5BI-WH

06 SCALE : NOT TO SCALE

KEYED WALLSTATION
SWS2-KSI3MOC-WH

07 SCALE : NOT TO SCALE

DUAL CEILING SENSOR
LOS-CDT-2000-WH

08 SCALE : NOT TO SCALE

HIGH BAY SENSOR
SGR-TC-3S-WH-CPN5825

09 SCALE : NOT TO SCALE

CONTROLLER INTERFACE
SE-CI-AP-D

10 SCALE : NOT TO SCALE

WALLSTATION
MA-R-WH

11 SCALE : NOT TO SCALE

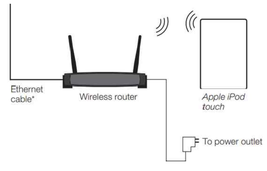

ESN WIRELESS SETUP KIT
C-ESN-SETUP

12 SCALE : NOT TO SCALE

No.	REVISIONS	BY

GMS ARCHITECTS
1150 Paredes Line Rd.
Brownsville TX 78526
(956) 546-0110
fax (956) 546-0196

BISD Hanna ECHS
Gymnasium Facility

STATE OF TEXAS
RAY PEYNADO
125390
06.12.2019

© Copyright 2019
Gomez Mendez Saenz Inc.
Architects-Planners
Interior Designers

Date: June 12, 2019
Scale: As Noted
Project Architect: David Monreal, AIA
Drawn By: ETHOS
Job No. BISD Hanna Gymnasium
Sheet: E5.03

ethos engineering
119 W. VAN BUREN AVE. STE 101
HARLINGEN, TX
PHONE: 956-230-3435
TEXAS REGISTERED
ENGINEERING FIRM
F-15598

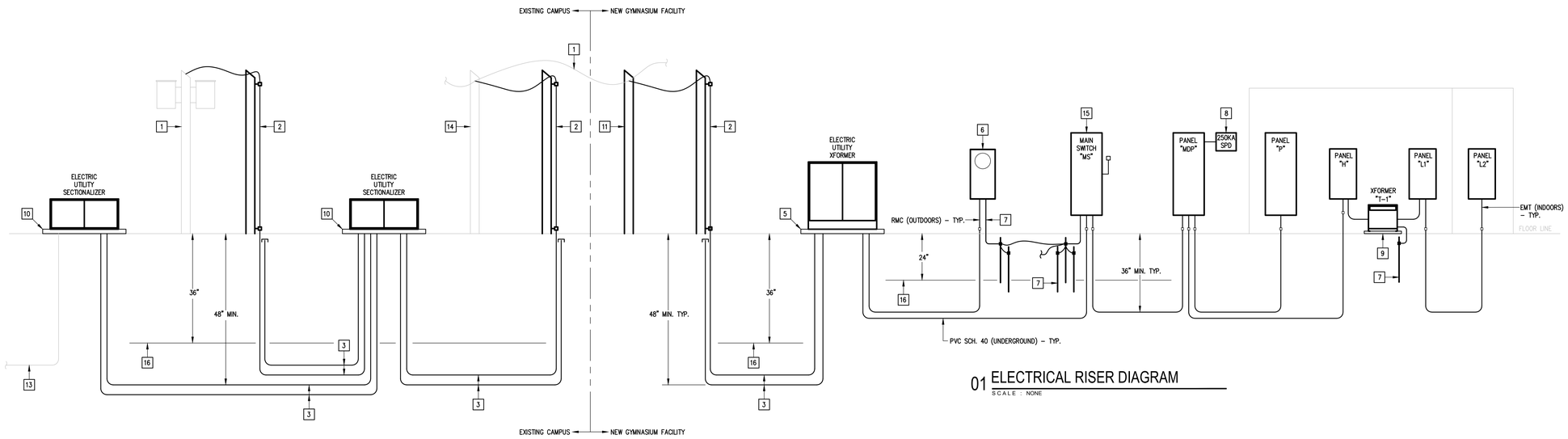

01 ELECTRICAL RISER DIAGRAM
SCALE : NONE

RACEWAYS EMBEDDED IN FOUNDATION GENERAL NOTES:

RACEWAYS EMBEDED WITHIN THE SLAB SHALL COMPLY WITH THE FOLLOWING:
1. SHALL HAVE A MINIMUM SPACING OF 2".
2. SHALL NOT BE LARGER THAN 1".
3. SHALL NOT BE RUN THROUGH THE SURFACE AREA OF THE FOOTING.
4. SHALL NOT BE CROSSED OVER/UNDER EACH OTHER WITHIN THE SLAB.
5. SHALL NOT BE TIED TO THE REBAR.
6. SHALL BE A MINIMUM OF 1.5" AWAY FROM SLAB REBAR. IF SPACING CANNOT BE ACCOMPLISHED; IT SHALL BE PROVIDED BELOW GRADE.

ELECTRICAL RISER DIAGRAM KEYED NOTES:

1. EXISTING ELECTRIC UTILITY 3ø OVERHEAD SERVICE LINES.
2. NEW ELECTRIC UTILITY DIP POLE. COORDINATE EXACT LOCATION WITH ELECTRIC UTILITY COMPANY (PUB).
3. PROVIDE(2)–4" RACEWAYS FOR PRIMARY LINE WITH 4" RED CONCRETE TOPPING. PROVIDE LONG SWEEP RADIUS ELBOWS.
4. EXISTING RACEWAYS FOR PRIMARY LINE.
5. PROVIDE ELECTRIC UTILITY TRANSFORMER CONCRETE PAD – SEE DETAIL.
6. PROVIDE ELECTRIC UTILITIES METER.
7. SEE GROUNDING RISER DIAGRAM – TYPICAL.
8. PROVIDE 250KA EXTERNALLY MOUNTED SPD CURRENT TECHNOLOGY MODEL #SL3–250–480–3Y–MD–B–M2–F–HPI.
9. PROVIDE 4" HOUSEKEEPING CONCRETE PAD – TYPICAL.
10. PROVIDE ELECTRIC UTILITY SECTIONALIZER CONCRETE PAD – SEE DETAIL. COORDINATE EXACT LOCATION WITH ELECTRIC UTILITY COMPANY (PUB).
11. NEW ELECTRIC UTILITY POWER POLE. COORDINATE EXACT LOCATION WITH ELECTRIC UTILITY COMPANY (PUB).
12. EXISTING ELECTRIC UTILITY POWER POLE WITH POLE MOUNT TRANSFORMERS TO BE RE–FED BY ELECTRIC UTILITY COMPANY (PUB).
13. EXISTING ELECTRIC UTILITY UNDERGROUND SERVICE LINES.
14. EXISTING ELECTRIC UTILITY POWER POLE.
15. PROVIDE MAIN DISCONNECT SWITCH, 800A, 3P3F, 800AF, S/N, 600V, NEMA 4X SS ENCLOSURE.
16. PROVIDE CONTINUOUS UNDERGROUND WARNING TAPE.

FEEDER SCHEDULE:

FEEDER AMPS	CONDUIT AND FEEDER	FEEDING THESE DEVICES
125	1.5" – 4#1 & #6G	L2
200	2" – 4#3/0 & #6G	H
350	3" – 4#500KCMIL & #3G	L1
500	(2–RUNS) 3" – 4#250KCMIL & #2G	P
800	(2–RUNS) 4" – 4#600KCMIL & #1/0G	MDP
800	(2–RUNS) 4" – 4#600KCMIL	MS

SIZING METHOD: COPPER 75°C

TRANSFORMER SCHEDULE:

DESIGN	KVA	PV	SV	DEGREE RISE	CONNECTION	FREQ HZ	SERVES PANELS	CAT. NO.	PRIMARY FEEDER (75°C COPPER)
T–1	112.5	480	120/208	115	DELTA Y	60	L1	POWER SMITH: ESAVER20M–112.5–480–208–HD–T115–F60	2" – 3#3/0 & #6G

EQUIPMENT CONNECTION SCHEDULE:

DESIGN	HP/KW	FLA	MCA	MOCP	VOLTAGE	DISCONNECT	BRANCH CIRCUIT
AHU–1	7.5 HP	11.0	13.7	30	480V/3PHASE	(1) VARIABLE FREQUENCY DRIVE.	3/4" – 3#10 & #10G
AHU–2	7.5 HP	11.0	13.7	30	480V/3PHASE	(1) VARIABLE FREQUENCY DRIVE.	3/4" – 3#10 & #10G
AHU–3	20 HP	27.0	33.8	70	480V/3PHASE	(1) VARIABLE FREQUENCY DRIVE.	1" – 3#4 & #8G
AHU–4	20 HP	27.0	33.8	70	480V/3PHASE	(1) VARIABLE FREQUENCY DRIVE.	1" – 3#4 & #8G
EDH–1	25 KW	30.1	–	40	480V/3PHASE	60A, 3PNF, 600V, NEMA 1 DISCONNECT.	3/4" – 3#8 & #10G
EDH–2	25 KW	30.1	–	40	480V/3PHASE	60A, 3PNF, 600V, NEMA 1 DISCONNECT.	3/4" – 3#8 & #10G
EDH–3	90 KW	108.3	–	150	480V/3PHASE	200A, 3PNF, 600V, NEMA 1 DISCONNECT.	1.5" – 3#1/0 & #6G
EDH–4	90 KW	108.3	–	150	480V/3PHASE	200A, 3PNF, 600V, NEMA 1 DISCONNECT.	1.5" – 3#1/0 & #6G
CH–1	–	218.0	260.5	300	480V/3PHASE	(2) NONE.	3" – 4#350KCMIL & #4G
CH–2	–	218.0	260.5	300	480V/3PHASE	(2) NONE.	3" – 4#350KCMIL & #4G
CHP–1	10 HP	14.0	17.5	35	480V/3PHASE	(1) VARIABLE FREQUENCY DRIVE.	3/4" – 3#10 & #10G
CHP–2	10 HP	14.0	17.5	35	480V/3PHASE	(1) VARIABLE FREQUENCY DRIVE.	3/4" – 3#10 & #10G
CHP–3	10 HP	14.0	17.5	35	480V/3PHASE	(1) VARIABLE FREQUENCY DRIVE.	3/4" – 3#10 & #10G
EWH–1A	24 KW	28.9	–	40	480V/3PHASE	(2) NONE.	3/4" – 3#8 & #10G
EWH–1B	24 KW	28.9	–	40	480V/3PHASE	(2) NONE.	3/4" – 3#8 & #10G
EWH–2	3 KW	14.4	–	20	208V/1PHASE	30A, 3PNF, 240V, NEMA 1 DISCONNECT.	1/2" – 2#12 & #12G
EWH–3	3 KW	14.4	–	20	208V/1PHASE	30A, 3PNF, 240V, NEMA 1 DISCONNECT.	1/2" – 2#12 & #12G
EWH–4	3 KW	14.4	–	20	208V/1PHASE	30A, 3PNF, 240V, NEMA 1 DISCONNECT.	1/2" – 2#12 & #12G
WASHER	–	–	–	40	208V/3PHASE	60A, 3PNF, 240V, NEMA 4X SS DISCONNECT.	3/4" – 4#8 & #10G
ICE MACH.	–	16.2	–	20	120V/1PHASE	30A, 2PNF, 240V, NEMA 1.	1/2" – 2#12 & #12G
ICE MACH. COND.	–	2.7	–	20	120V/1PHASE	30A, 2PNF, 240V, NEMA 4X SS DISCONNECT.	1/2" – 2#12 & #12G
CP–1	1/12 HP	–	–	20	120V/1PHASE	(2) NONE.	1/2" – 2#12 & #12G

(1) PROVIDED BY DIVISION 23. INSTALLED AND CONNECTED BY DIVISION 26.

(2) MEANS OF DISCONNECT IS THE CIRCUIT BREAKER (WITHIN SIGHT).

GENERAL NOTE: LOCATE EQUIPMENT MEANS OF DISCONNECT WITHIN EQUIPMENT SIGHT. DO NOT INSTALL ON EQUIPMENT, BELOW DUCTWORK OR PLUMBING LINES.

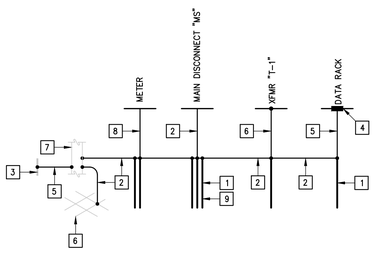

02 GROUNDING RISER DIAGRAM
SCALE : NONE

GROUNDING RISER KEYED NOTES:

1. 3/4"X 10' COPPER CLAD GROUND RODS – TYPICAL.
2. #3/0 BARE COPPER GROUND ELECTRODE CONDUCTOR.
3. BOND/CLAMP TO COPPER WATER LINE.
4. GROUNDING BUS BAR – TYPICAL.
5. #4 BARE COPPER GROUND CONDUCTOR.
6. CADWELD CONNECT TO FOUNDATION REBAR.
7. CADWELD CONNECT TO STRUCTURE STEEL.
8. #4 BARE COPPER GROUND CONDUCTOR.
9. INSTALL IN A TRIANGULAR PATTERN MIN. 6' APART.

EXHAUST FAN CONNECTION SCHEDULE:

DESIGNATION	HP/WATTS	FLA	VOLTAGE	CONNECTION FOR EACH	BRANCH CIRCUIT
EF–1	241 W	2.2	120V/1PHASE	CONNECT AT CEILING. INTERLOCKING BY HVAC CONTROLS CONTRACTOR.	1/2" – 2#12 & #12G
EF–2	241 W	2.2	120V/1PHASE	CONNECT AT CEILING. INTERLOCKING BY HVAC CONTROLS CONTRACTOR.	1/2" – 2#12 & #12G
EF–3	241 W	2.2	120V/1PHASE	CONNECT AT CEILING. INTERLOCKING BY HVAC CONTROLS CONTRACTOR.	1/2" – 2#12 & #12G
EF–4	241 W	2.2	120V/1PHASE	CONNECT AT CEILING. INTERLOCKING BY HVAC CONTROLS CONTRACTOR.	1/2" – 2#12 & #12G
EF–5	76.4 W	0.7	120V/1PHASE	CONNECT AT CEILING. INTERLOCKING BY HVAC CONTROLS CONTRACTOR.	1/2" – 2#12 & #12G
EF–6	55.9 W	0.5	120V/1PHASE	CONNECT AT CEILING. SWITCH VIA OCCUPANCY SENSOR.	1/2" – 2#12 & #12G
EF–7	55.9 W	0.5	120V/1PHASE	CONNECT AT CEILING. SWITCH VIA OCCUPANCY SENSOR.	1/2" – 2#12 & #12G
EF–8	1/2 HP	9.8	120V/1PHASE	CONNECT AT CEILING. INTERLOCKING BY HVAC CONTROLS CONTRACTOR.	3/4" – 2#10 & #10G
EF–9	283 W	2.6	120V/1PHASE	CONNECT AT CEILING. INTERLOCKING BY HVAC CONTROLS CONTRACTOR.	1/2" – 2#12 & #12G
EF–10	1/2 HP	9.8	120V/1PHASE	CONNECT AT CEILING. INTERLOCKING BY HVAC CONTROLS CONTRACTOR.	3/4" – 2#10 & #10G
EF–11	283 W	2.6	120V/1PHASE	CONNECT AT CEILING. INTERLOCKING BY HVAC CONTROLS CONTRACTOR.	1/2" – 2#12 & #12G
EF–12	64.9 W	0.6	120V/1PHASE	CONNECT AT CEILING. INTERLOCKING BY HVAC CONTROLS CONTRACTOR.	1/2" – 2#12 & #12G
EF–13	31.2 W	0.3	120V/1PHASE	CONNECT AT CEILING. SWITCH VIA OCCUPANCY SENSOR.	1/2" – 2#12 & #12G

ethos engineering
119 W. VAN BUREN AVE. STE 101
HARLINGEN, TX
PHONE: 956-230-3435
TEXAS REGISTERED
ENGINEERING FIRM
F-15998

No.	REVISIONS	BY

GMS ARCHITECTS
1150 Paredes Line Rd.
Brownsville TX 78526
(956) 546-0110
fax (956) 546-0196

BISD Hanna ECHS
Gymnasium Facility

STATE OF TEXAS
RAY PEYNADO
125390
LICENSED
PROFESSIONAL ENGINEER
06.12.2019

© Copyright 2019
Gomez Mendez Saenz Inc.
Architects-Planners
Interior Designers

Date: June 12, 2019
Scale: As Noted
Project Architect: David Monreal, AIA
Drawn By: ETHOS
Job No.: BISD Hanna Gymnasium
Sheet:

E6.01

P

ROOM
MOUNTING SURFACE
FED FROM MDP
NOTE PROVIDE A TYPE WRITTEN AS BUILT DIRECTORY THAT INCLUDES ROOM NUMBERS.

VOLTS 480Y/277V 3P 4W
BUS AMPS 600
NEUTRAL 100%

AIC 65,000
MAIN BKR 500
LUGS STANDARD

CKT #	CKT BKR	CIRCUIT DESCRIPTION	LOAD KVA A	B	C	CKT #	CKT BKR	CIRCUIT DESCRIPTION	LOAD KVA A	B	C
1	40/3	EDH-1	8.33			2	30/3	(7.5HP) AHU-1	3.05		
3	|			8.33		4	|			3.05	
5	|				8.33	6	|				3.05
7	40/3	EDH-2	8.33			8	30/3	(7.5HP) AHU-2	3.05		
9	|			8.33		10	|			3.05	
11	|				8.33	12	|				3.05
13	150/3	EDH-3	30			14	70/3	(20HP) AHU-3	7.48		
15	|			30		16	|			7.48	
17	|				30	18	|				7.48
19	150/3	EDH-4	30			20	70/3	(20HP) AHU-4	7.48		
21	|			30		22	|			7.48	
23	|				30	24	|				7.48
25	35/3	(10HP) CHP-1	3.88			26	40/3	EWH-1A	8		
27	|			3.88		28	|			8	
29	|				3.88	30	|				8
31	35/3	(10HP) CHP-2	3.88			32	40/3	EWH-1B	8		
33	|			3.88		34	|			8	
35	|				3.88	36	|				8
37	35/3	(10HP) CHP-3	0			38	100/3	SPACE	0		
39	|			0		40	|			0	
41	|				0	42	|				0
								TOTAL CONNECTED KVA BY PHASE	121	121	121

	CONN KVA	CALC KVA	
LIGHTING	0	0	(125%)
LARGEST MOTOR	22.4	5.61	(25%)
OTHER MOTORS	23.3	23.3	(100%)
RECEPTACLES	0	0	(50%>10)
KITCHEN EQUIP	0	0	(N/A)

	CONN KVA	CALC KVA	
CONTINUOUS	0	0	(125%)
HEATING	230	230	(100%)
COOLING	63.2	0	(0%)
NONCONTINUOUS	48	48	(100%)
DIVERSE	0	0	(N/A)
METERED DEMAND	0	0	(125%)
TOTAL KVA	364	307	
BALANCED 3-PHASE AMPS		369	

1. PROVIDE SHUNT TRIP MAIN BREAKER AND TAYLOR PHASE GUARD PROTECTION TO MAIN BREAKER.

MDP

ROOM
MOUNTING SURFACE
FED FROM UTILITY
NOTE PROVIDE PHENOLIC CIRCUIT BREAKER IDENTIFICATION NAMETAGS PER SPECIFICATIONS.

VOLTS 480Y/277V 3P 4W
BUS AMPS 800
NEUTRAL 100%

AIC 100,000
MAIN BKR MLO
LUGS STANDARD

CKT #	CKT BKR	CIRCUIT DESCRIPTION	LOAD KVA A	B	C	CKT #	CKT BKR	CIRCUIT DESCRIPTION	LOAD KVA A	B	C
1	300/3	* CH-1	60.4			2	500/3	PANEL P	121		
3	|			60.4		4	|			121	
5	|				60.4	6	|				121
7	300/3	* CH-2	60.4			8	200/3	PANEL H	45.2		
9	|			60.4		10	|			52.8	
11	|				60.4	12	|				44.4
13	20/3	SPACE	0			14	20/3	SPACE	0		
15	|			0		16	|			0	
17	|				0	18	|				0
19	20/3	SPACE	0			20	20/3	SPACE	0		
21	|			0		22	|			0	
23	|				0	24	|				0
								TOTAL CONNECTED KVA BY PHASE	287	295	287

	CONN KVA	CALC KVA	
LIGHTING	19	23.8	(125%)
LARGEST MOTOR	181	45.3	(25%)
OTHER MOTORS	30.7	30.7	(100%)
RECEPTACLES	65	37.5	(50%>10)
KITCHEN EQUIP	0	0	(N/A)

	CONN KVA	CALC KVA	
CONTINUOUS	5	6.25	(125%)
HEATING	230	0	(0%)
COOLING	430	430	(100%)
NONCONTINUOUS	90	90	(100%)
DIVERSE	0	0	(N/A)
METERED DEMAND	0	0	(125%)
TOTAL KVA	869	663	
BALANCED 3-PHASE AMPS		798	

1. PROVIDE A NEMA 4X SS OUTDOOR ENCLOSURE.
2. PROVIDE TAYLOR PHASE GUARD PROTECTION FOR CH-1 & CH-2.

:PROVIDE SHUNT TRIP TYPE.

L2

ROOM
MOUNTING SURFACE
FED FROM L1
NOTE PROVIDE A TYPE WRITTEN AS BUILT DIRECTORY THAT INCLUDES ROOM NUMBERS.

VOLTS 208Y/120V 3P 4W
BUS AMPS 225
NEUTRAL 100%

AIC 10,000
MAIN BKR 125
LUGS STANDARD

CKT #	CKT BKR	CIRCUIT DESCRIPTION	LOAD KVA A	B	C	CKT #	CKT BKR	CIRCUIT DESCRIPTION	LOAD KVA A	B	C
1	20/1	HAND DRYER	1.5			2	25/1	EF-10	1.18		
3	20/1	HAND DRYER		1.5		4	25/1	EF-8		1.18	
5	20/1	HAND DRYER			1.5	6	20/1	FLOW SWITCH			0.18
7	20/1	HAND DRYER	1.5			8	20/1	RECEPT.	0.18		
9	20/1	HAND DRYER		1.5		10	20/1	RECEPT.		0.18	
11	20/1	HAND DRYER			1.5	12	20/1	RECEPT.			0.18
13	20/1	HAND DRYER	1.5			14	20/1	RECEPT.	0.18		
15	20/1	HAND DRYER		1.5		16	20/1	RECEPT.		0.18	
17	20/1	HAND DRYER			1.5	18	20/1	RECEPT.			0.18
19	20/1	HAND DRYER	1.5			20	20/1	RECEPT.	0.18		
21	20/1	DRINKING FOUNTAIN		0.8		22	20/1	RECEPT.		0.18	
23	20/1	DRINKING FOUNTAIN			0.8	24	20/1	RECEPT.			0.18
25	20/1	RECEPT.	1.08			26	20/1	RECEPT.	0.18		
27	20/1	FIRE ALARM CONTROL PANEL		1.2		28	20/1	EF-9		0.314	
29	20/1	INTRUSION DETECTION PANEL			0.1	30	20/1	EF-11			0.314
31	20/1	LOGO SIGN	0.1			32	20/1	EF-12, EF-13, LIGHTING	0.142		
33	20/1	FIRE ALARM CONTROL PANEL		1.2		34	20/1	RECEPT.		0.54	
35	20/1	INTRUSION DETECTION PANEL			0.1	36	20/1	RECEPT., TRAP PRIMER			0.73
37	20/1	* ICE MACH., ICE MACH. COND.	2.04			38	25/1	(1/2HP) MOT. DOOR	1.18		
39	20/2	EWH-3		1.5		40	20/2	EWH-2		1.5	
41	|				1.5	42	|				1.5
43	20/1	SPACE	0			44	20/2	EWH-4	1.5		
45	20/1	SPARE		0		46	|			1.5	
47	20/1	SPARE			0	48	20/2	SPARE			0
49	20/1	SPARE	0			50			0		
51	20/1	SPARE		0		52	30/2	SPARE		0	
53	20/1	SPARE			0	54	|				0
55	20/1	SPARE	0			56	20/1	SPACE	0		
57	20/1	SPARE		0		58	20/1	B.A.S. CONTROLS		0	
59	20/1	SPARE			0	60	20/1	B.A.S. CONTROLS			0
								TOTAL CONNECTED KVA BY PHASE	13.9	14.8	10.3

	CONN KVA	CALC KVA	
LIGHTING	0.131	0.164	(125%)
LARGEST MOTOR	1.94	0.486	(25%)
OTHER MOTORS	4.37	4.37	(100%)
RECEPTACLES	20.9	15.5	(50%>10)
KITCHEN EQUIP	0	0	(N/A)

	CONN KVA	CALC KVA	
CONTINUOUS	2.6	3.25	(125%)
HEATING	0	0	(N/A)
COOLING	1.94	1.94	(100%)
NONCONTINUOUS	9	9	(100%)
DIVERSE	0	0	(N/A)
METERED DEMAND	0	0	(125%)
TOTAL KVA	39	34.7	
BALANCED 3-PHASE AMPS		96.3	

:PROVIDE HACR TYPE.

L1

ROOM
MOUNTING SURFACE
FED FROM T-1
NOTE PROVIDE A TYPE WRITTEN AS BUILT DIRECTORY THAT INCLUDES ROOM NUMBERS.

VOLTS 208Y/120V 3P 4W
BUS AMPS 400
NEUTRAL 100%

AIC 10,000
MAIN BKR 350
LUGS STANDARD

CKT #	CKT BKR	CIRCUIT DESCRIPTION	LOAD KVA A	B	C	CKT #	CKT BKR	CIRCUIT DESCRIPTION	LOAD KVA A	B	C
1	20/1	EF-6, EF-7, LIGHTING	0.188			2	20/1	RECEPT.	0.9		
3	20/1	RECEPT.		1.8		4	20/1	RECEPT.		0.9	
5	20/1	HAND DRYER			1.5	6	20/1	MOT. BACKBOARD			0.8
7	20/1	HAND DRYER	1.5			8	20/1	MOT. BACKBOARD	0.8		
9	20/1	HAND DRYER		1.5		10	20/1	MOT. BACKBOARD		0.8	
11	20/1	HAND DRYER			1.5	12	20/1	MOT. BACKBOARD			0.8
13	20/1	RECEPT.	0.54			14	20/1	MOT. BACKBOARD	0.8		
15	20/1	RECEPT.		0.36		16	20/1	MOT. BACKBOARD		0.8	
17	20/1	DRINKING FOUNTAIN			0.8	18	20/1	MOT. BACKBOARD			0.8
19	20/1	DRINKING FOUNTAIN	0.8			20	20/1	MOT. BACKBOARD	0.8		
21	20/1	RECEPT.		0.72		22	20/1	MOT. BACKBOARD		0.8	
23	20/1	AMPLIFIER			1.2	24	20/1	MOT. BACKBOARD			0.8
25	20/1	SPACE	0			26	20/3	TELESCOPIC BLEACHER	0.033		
27	20/1	RECEPT.		1.44		28	|			0.033	
29	20/1	RECEPT.			1.44	30	|				0.033
31	20/1	RECEPT.	0.18			32	125/3	PANEL L2	13.9		
33	20/1	RECEPT.		0.18		34	|			14.8	
35	20/1	RECEPT.			0.36	36	|				10.3
37	20/1	RECEPT.	0.54			38	20/1	TRAP PRIMER, USB RECEPT.	0.37		
39	20/1	SCOREBOARD		1.4		40	20/1	IDF - UPS		1.2	
41	20/1	SCOREBOARD			1.4	42	20/1	EF-1, EF-2			0.534
43	20/1	RECEPT.	0.36			44	20/1	EF-3, EF-4	0.534		
45	20/1	RECEPT.		0.36		46	20/1	EF-5		0.082	
47	20/1	LIGHTING			1.34	48	20/1	RECEPT.			0.54
49	20/1	RECEPT., USB RECEPT.	0.54			50	20/1	RECEPT.	0.36		
51	20/1	FLAT SCREEN		1.4		52	50/1	SCOREBOARD		5.6	
53	20/3	TELESCOPIC BLEACHER			0.033	54	20/1	CP-1			0.1
55	|		0.033			56	20/1	* ICE MACH., ICE MACH. COND.	2.04		
57	|			0.033		58	20/1	B.A.S. CONTROLS		0	
59	30/2	DRYER			2.5	60	20/1	B.A.S. CONTROLS			0
61	|		2.5			62	20/1	FLAT SCREEN	1.4		
63	30/2	DRYER		2.5		64	20/1	SPACE		0	
65	|				2.5	66	20/1	SCISSOR LIFT & PROJECTOR			1.09
67	40/3	WASHER	3.84			68	20/1	SCISSOR LIFT & PROJECTOR	1.09		
69	|			3.84		70	20/1	PROJ. SCREEN		0.696	
71	|				3.84	72	20/1	PROJ. SCREEN			0.696
73	40/3	WASHER	3.84			74	20/1	MOT. BACKBOARD	0.8		
75	|			3.84		76	20/1	MOT. BACKBOARD		0.8	
77	|				3.84	78	20/1	MOT. BACKBOARD			0.8
79	20/2	SPARE	0			80	20/1	MOT. BACKBOARD	0.8		
81	|			0		82	30/2	SPARE		0	
83	20/1	SPACE			0	84	|				0
								TOTAL CONNECTED KVA BY PHASE	39.5	45.9	39.5

	CONN KVA	CALC KVA	
LIGHTING	1.53	1.91	(125%)
LARGEST MOTOR	1.94	0.486	(25%)
OTHER MOTORS	7.43	7.43	(100%)
RECEPTACLES	65	37.5	(50%>10)
KITCHEN EQUIP	0	0	(N/A)

	CONN KVA	CALC KVA	
CONTINUOUS	5	6.25	(125%)
HEATING	0	0	(N/A)
COOLING	3.89	3.89	(100%)
NONCONTINUOUS	42	42	(100%)
DIVERSE	0	0	(N/A)
METERED DEMAND	0	0	(125%)
TOTAL KVA	125	99.5	
BALANCED 3-PHASE AMPS		276	

:PROVIDE HACR TYPE.

H

ROOM
MOUNTING SURFACE
FED FROM MDP
NOTE PROVIDE A TYPE WRITTEN AS BUILT DIRECTORY THAT INCLUDES ROOM NUMBERS.

VOLTS 480Y/277V 3P 4W
BUS AMPS 225
NEUTRAL 100%

AIC 14,000
MAIN BKR 200
LUGS STANDARD

CKT #	CKT BKR	CIRCUIT DESCRIPTION	LOAD KVA A	B	C	CKT #	CKT BKR	CIRCUIT DESCRIPTION	LOAD KVA A	B	C
1	20/1	LIGHTING	1.27			2	20/1	LIGHTING	3.32		
3	20/1	LIGHTING		2.93		4	20/1	LIGHTING		2.93	
5	20/1	LIGHTING			3.32	6	20/1	LIGHTING			1.59
7	20/1	LIGHTING	0.31			8	20/1	LIGHTING	0.746		
9	20/1	LIGHTING		0.744		10	20/1	BOLLARDS LIGHTING		0.34	
11	20/1	SPARE			0	12	20/1	SPACE			0
13	20/1	SPARE	0			14	20/1	SPACE	0		
15	20/1	SPARE		0		16	20/1	SPACE		0	
17	20/1	SPARE			0	18	20/1	SPACE			0
19	20/1	SPARE	0			20	200/3	*XFMR T-1	39.5		
21	20/1	SPARE		0		22	|			45.9	
23	20/1	SPARE			0	24	|				39.5
25	20/1	SPARE	0			26	20/1	SPACE	0		
27	20/1	SPACE		0		28	20/1	SPACE		0	
29	20/1	SPACE			0	30	20/1	SPACE			0
31	20/1	SPACE	0			32	20/1	SPACE	0		
33	20/1	SPACE		0		34	20/1	SPACE		0	
35	20/1	SPACE			0	36	20/1	SPACE			0
37	20/1	SPACE	0			38	20/1	SPACE	0		
39	20/1	SPACE		0		40	20/1	SPACE		0	
41	20/1	SPACE			0	42	20/1	SPACE			0
								TOTAL CONNECTED KVA BY PHASE	45.2	52.8	44.4

	CONN KVA	CALC KVA	
LIGHTING	19	23.8	(125%)
LARGEST MOTOR	1.94	0.486	(25%)
OTHER MOTORS	7.43	7.43	(100%)
RECEPTACLES	65	37.5	(50%>10)
KITCHEN EQUIP	0	0	(N/A)

	CONN KVA	CALC KVA	
CONTINUOUS	5	6.25	(125%)
HEATING	0	0	(N/A)
COOLING	3.89	3.89	(100%)
NONCONTINUOUS	42	42	(100%)
DIVERSE	0	0	(N/A)
METERED DEMAND	0	0	(125%)
TOTAL KVA	142	121	
BALANCED 3-PHASE AMPS		146	

* PROVIDE ELECTRONIC TYPE WITH L.S.I. DIALS.

No.	REVISIONS	BY

GMS ARCHITECTS
1150 Paredes Line Rd.
Brownsville TX 78526
(956) 546-0110
fax (956) 546-0196

BISD Hanna ECHS
Gymnasium Facility

STATE OF TEXAS
RAY PEYNADO
125390
06.12.2019

© Copyright 2019
Gomez Mendez Saenz Inc.
Architects-Planners
Interior Designers

Date: June 12, 2019
Scale: As Noted
Project Architect: David Monreal, AIA
Drawn By: ETHOS
Job No.: BISD Hanna Gymnasium
Sheet: E7.01

ethos engineering
119 W. VAN BUREN AVE. STE 101
HARLINGEN, TX
PHONE: 956-230-3435
TEXAS REGISTERED
ENGINEERING FIRM
F-15998

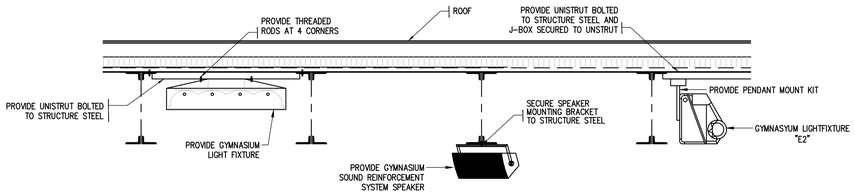

GYMNASIUM LIGHTING □ SPEAKER CEILING MOUNTING DETAIL

01 SCALE : NOT TO SCALE

KEYED NOTES:

1. 2'x 4' LAY-IN FLUORESCENT FIXTURE
2. SUSPENDED CEILING
3. TIE WIRE, CONNECT TO ALL FOUR CORNERS OF FIXTURE TO STRUCTURE ABOVE, INDEPENDENT OF CEILING SUPPORTS.

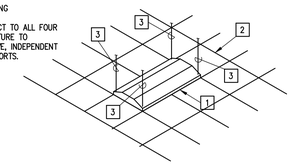

TYPICAL LAY-IN FIXTURE SUPPORT

02 SCALE : NOT TO SCALE

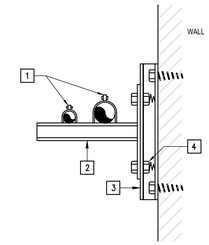

KEYED NOTES:

1. CONDUIT CLAMPS.
2. GALVANIZED UNISTRUT WALL BRACKET.
3. RAMSET OR BOLT GALVANIZED UNISTRUT TO WALL.
4. SELF HOLDING CLAMPING NUT WITH SPRING.

RACEWAY RUNS SUPPORT DETAIL

03 SCALE : NOT TO SCALE

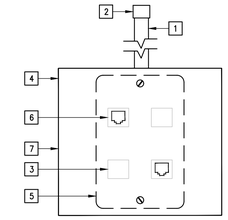

KEYED NOTES:

1. 1" EMT STUBBED ABOVE CLG.
2. INSULATING BUSHING
3. BLANK FILLER COVER
4. COVERPLATE
5. STEEL MUD RING
6. CATEGORY SIX JACK – PROVIDED BY OWNER
7. 4"X4"X2-5/8" DEEP BOX

TYPICAL DATA/TELEPHONE OUTLET DETAIL

04 SCALE : NOT TO SCALE

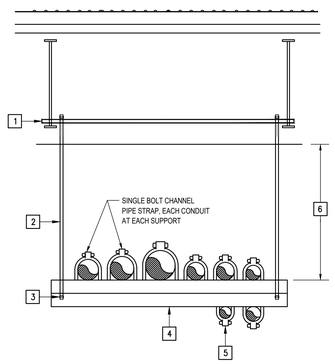

KEYED NOTES:

1. UNISTRUT STRUCTURAL CHANNEL SECURED TO TO JOIST AT BOTH ENDS.
2. 1/2" GALVANIZED ROD MINIMUM.
3. LOCKNUT.
4. GALVANIZED UNISTRUT 8'-0" O/C MAXIMUM.
5. 0'-1" MAXIMUM SIZE ON BOTTOM OF UNISTRUT.
6. VARIES.

HORIZONTAL RACEWAYS SUPPORT DETAIL

05 SCALE : NOT TO SCALE

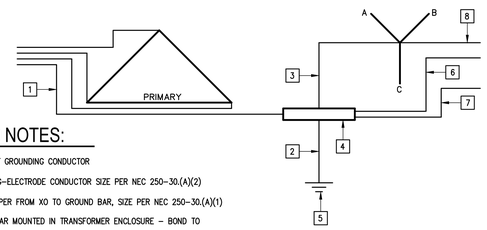

KEYED NOTES:

1. EQUIPMENT GROUNDING CONDUCTOR
2. GROUNDING-ELECTRODE CONDUCTOR SIZE PER NEC 250-30.(A)(2)
3. BOND JUMPER FROM XO TO GROUND BAR, SIZE PER NEC 250-30.(A)(1)
4. GROUND BAR MOUNTED IN TRANSFORMER ENCLOSURE – BOND TO FRAME.
5. GROUNDING ELECTRODES PER NEC 250-30. (A)(3)REBAR FOUNDATION.
6. GREEN/YELLOW IG GROUNDING CONDUCTOR, SIZE PER NEC 250-146, 250-146.(D)
7. GREEN EQUIPMENT GROUNDING CONDUCTOR, SIZE PER NEC 250-122.
8. OUTPUT NEUTRAL – 200% SIZE FOR NONLINEAR LOADS.

TRANSFORMER WIRING DIAGRAM DETAIL

06 SCALE : NOT TO SCALE

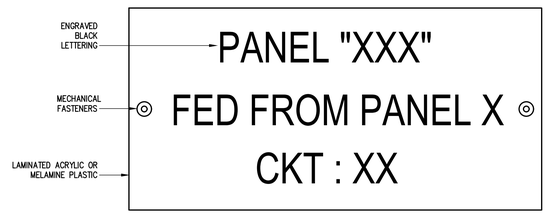

NOTE: ATTACH NAMEPLATES TO ALL ELECTRICAL GEAR AS NOTED ON SECTION 16075.

E□UIPMENT IDENTIFICATION LABEL DETAIL

07 SCALE : NOT TO SCALE

KEYED NOTES:

1. ENCLOSURE TOP IS TO BE PLUMB, LEVEL AND FLUSH WITH THE FINISHED SURFACE.
2. TEMPORARY CONSTRUCTION COVER TO BE REPLACED BY FINISH COVER PRIOR TO CARPET/TILE/WOOD INSTALLATION.
3. ADJUSTMENT SCREWS PROVIDED IN THE PAN KIT.
4. NEW 3/4" – DIA. GRAVEL FILL.
5. CONCRETE SLAB.
6. GRADE.

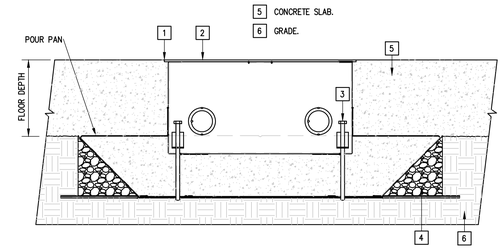

FLOOR BOX WITH POUR PAN DETAIL

08 SCALE : NOT TO SCALE

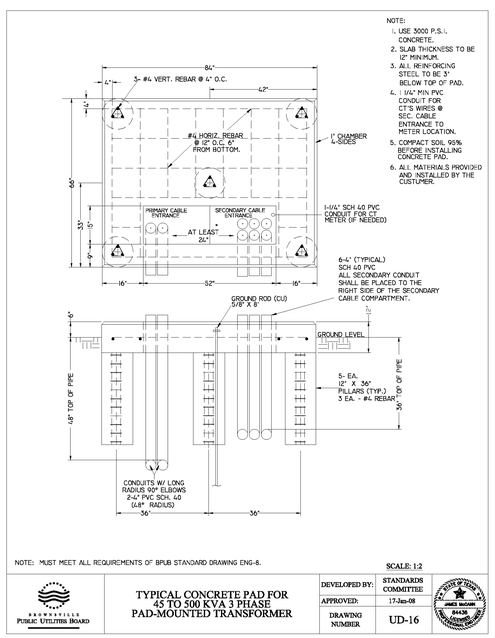

BROWNSVILLE P.U.B. 3Ø TRANSFORMER CONCRETE PAD DETAIL

09 SCALE : NOT TO SCALE

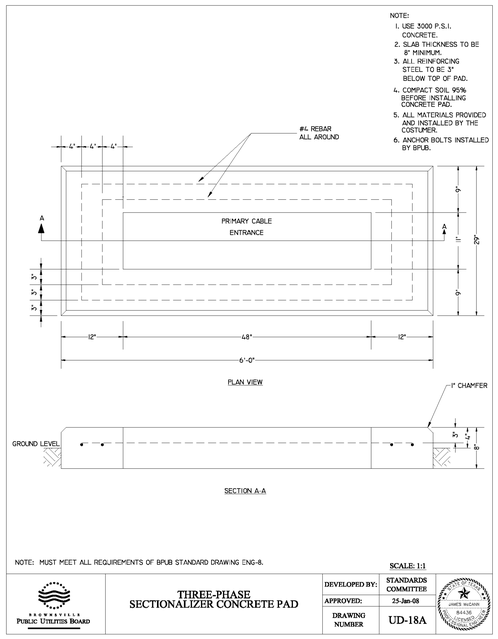

BROWNSVILLE P.U.B. 3Ø SECTIONALIZER CONCRETE PAD DETAIL

10 SCALE : NOT TO SCALE

KEYED NOTES:

1. PROVIDE UNISTRUT SUPPORTS SECURED TO STRUCTURAL STEEL – TYPICAL.
2. PROVIDE THREADED RODS – TYPICAL.
3. PROVIDE DRAPER UNIVERSAL PROJECTOR MOUNTING BRACKET.
4. PROVIDE 1.5" CMA EXTENSION COLUMN.
5. PROVIDE DRAPER MOTORIZED SCISSOR LIFT SL PRO.
6. RPA-240.
7. PROVIDE LCD/DLP BRACKET.
8. PROVIDE PROJECTOR EPSON POWER LINE PRO. MOUNT PROJECTOR TO BOTTOM OF SCISSOR LIFT.
9. 2 EACH MHR-VGA CABLES.
10. TERMINATE AT MULTIMEDIA OUTLET.

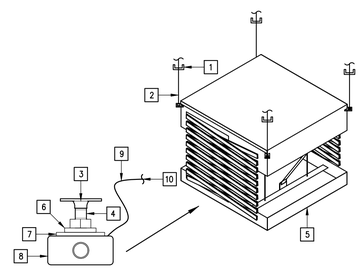

SCISSOR LIFT □ PROJECTOR DETAIL

12 SCALE : NOT TO SCALE

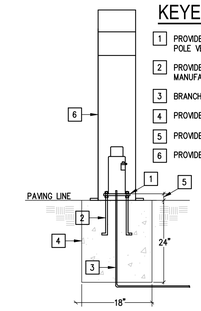

KEYED NOTES:

1. PROVIDE DOUBLE NUTS FOR ADJUSTMENT OF POLE VERTICAL ALIGNMENT.
2. PROVIDE ANCHOR BOLTS TO MATCH BOLLARD MANUFACTURER.
3. BRANCH CIRCUIT – SEE SITE PLAN FOR SIZE.
4. PROVIDE 4,000PSI CONCRETE FOUNDATION.
5. PROVIDE 1-1/2" ANCHOR BOLT PROJECTION.
6. PROVIDE BOLLARD LIGHT AS SCHEDULED.

BOLLARD LIGHT FOUNDATION DETAIL

14 SCALE : NOT TO SCALE

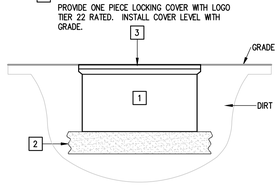

KEYED NOTES:

1. PROVIDE POLYMER CONCRETE PULL BOX TIER 22 RATED. COMPLYING WITH ANSI/SCTE 77 AND NEC 314.30.
2. PROVIDE 8" OF GRAVEL OR CRUSHED ROCK.
3. PROVIDE ONE PIECE LOCKING COVER WITH LOGO TIER 22 RATED. INSTALL COVER LEVEL WITH GRADE.

POLYMER CONCRETE PULLBOX DETAIL

11 SCALE : NONE

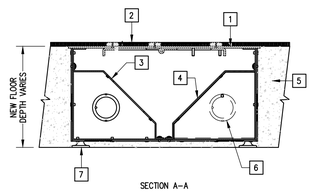

NOTES:

1. PROVIDE CUT OUT, POUR PAN, AND NEW CONCRETE AS RE□UIRED TO INSTALL FLOOR BOX FLUSH WITH FINISHED FLOOR.
2. SEE ELECTRICAL DRAWINGS FOR POWER AND SPECIAL SYSTEMS COMPONENT RE□UIREMENTS

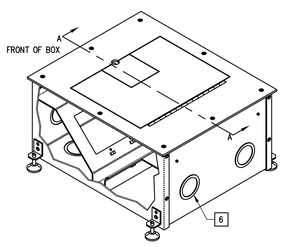

KEYED NOTES:

1. TOP OF FLOOR BOX COVER MUST BE FLUSH WITH FINISHED FLOOR.
2. WOOD/TILE TRIM INSERTED ONTO FLANGED COVER.
3. 4-GANG (POWER).
4. 4-GANG (SPECIAL SYSTEMS).
5. POURED CONCRETE.
6. RACEWAY KNOCKOUTS - TYPICAL.
7. LEVELING FEET - TYPICAL.

TYPICAL WOOD/TILE FLOOR BOX DETAIL

13 SCALE : NOT TO SCALE

No.	REVISIONS	BY

GMS ARCHITECTS
1150 Paredes Line Rd.
Brownsville TX 78526
(956) 546-0110
fax (956) 546-0196

BISD Hanna ECHS
Gymnasium Facility

STATE OF TEXAS
RAY PEYNADO
125390
LICENSED PROFESSIONAL ENGINEER
06.12.2019

© Copyright 2019
Gomez Mendez Saenz Inc.
Architects-Planners
Interior Designers

Date:	June 12, 2019
Scale:	As Noted
Project Architect:	David Monreal, AIA
Drawn By:	ETHOS
Job No.	BISD Hanna Gymnasium
Sheet:	E8.01

ethos engineering
119 W. VAN BUREN AVE. STE.101
HARLINGEN, TX
PHONE: 956-230-3435
TEXAS REGISTERED
ENGINEERING FIRM
F-15998

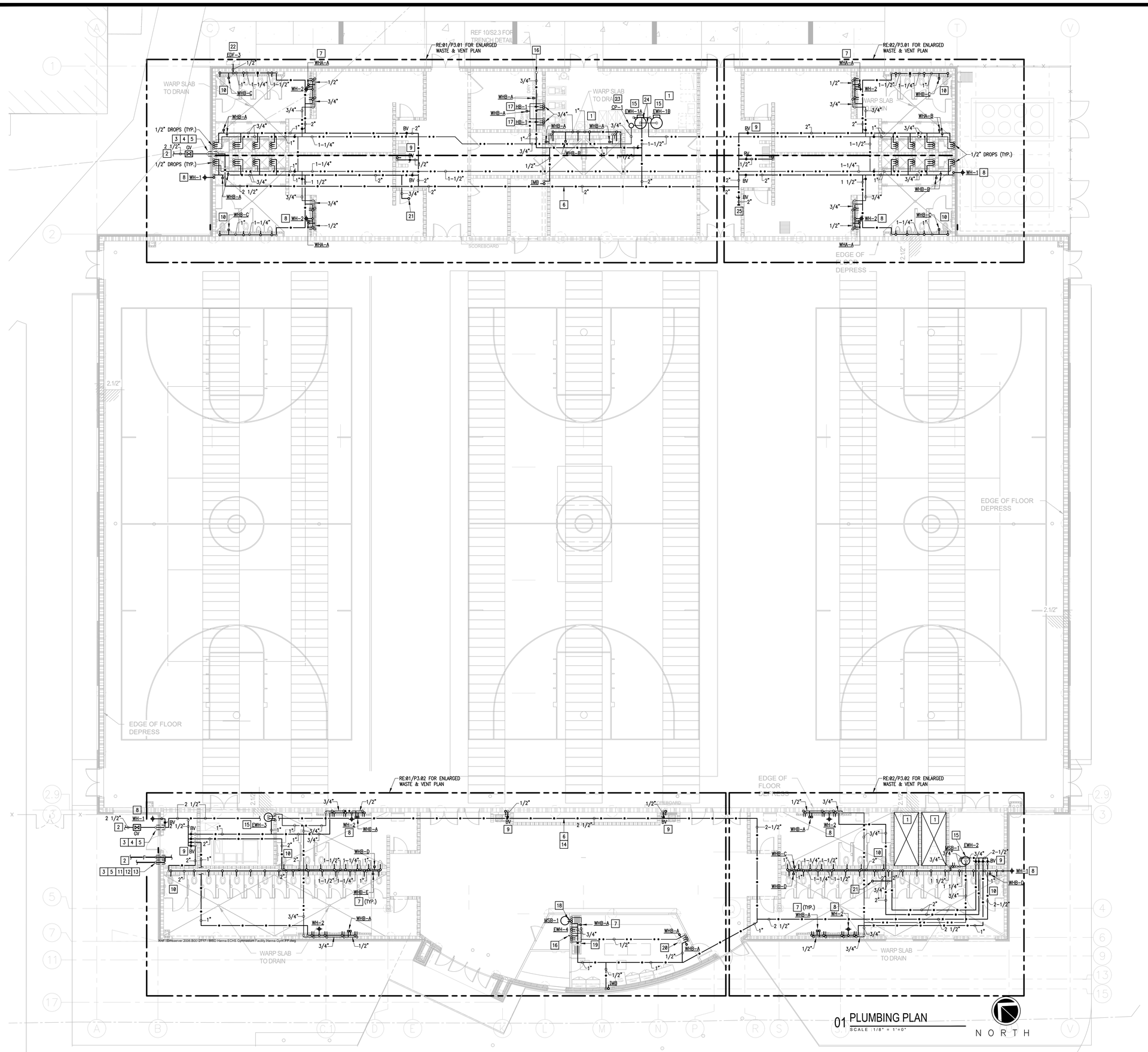

PLUMBING KEYED NOTES:

1. CLEARANCE FOR ELECTRICAL PANELS. ROUTE NO PIPING OVER THIS AREA. REFER TO ELECTRICAL PLANS FOR EXACT LOCATION OF ELECTRICAL ROOMS.
2. REFER TO MEP SITE PLAN FOR CONTINUATION.
3. SLEEVE ALL GRADE BEAMS, FLOOR SLABS AND MASONRY WALL PENETRATIONS PER DETAIL WHETHER SPECIFICALLY INDICATED ON PLANS OR NOT.
4. PROVIDE GATE VALVE IN QUAZITE BOX. SEE ASSOCIATED DETAIL ON DETAIL SHEET.
5. PROVIDE 1" CLOSED-CELL INSULATION WITH METAL JACKET ON EXPOSED PIPING. PENETRATE EXTERIOR WALL AS LOW AS POSSIBLE. TURN DOWN TO UNDERGROUND.
6. PROVIDE PIPING SUPPORT AS PER SPECS AND DETAIL. SEE ASSOCIATED DETAIL ON DETAIL SHEET. (TYPICAL)
7. PROVIDE BELLOWS TYPE WATER HAMMER ARRESTOR (WHB), MIFAB OR APPROVED EQUAL. INDICATED MODEL (A,B,C,D,E,F) AS PER MIFAB SIZING CHART. PROVIDE 12"X12" ACCESS PANEL WHERE INSTALLED IN AN INACCESSIBLE AREA. ACCESS PANEL EQUAL TO ACUDOR MODEL UF5000 WITH CYLINDER LOCK AND KEY AND PAINT TO MATCH THE WALL/CEILING. (TYPICAL)
8. PROVIDE WALL HYDRANT AS SCHEDULED. PROVIDE CLOSE COUPLED HYDRANT TO ENSURE PIPE TURNS UP INSIDE BLOCK WALL. COORDINATE WALL THICKNESS WITH WALL HYDRANT MANUFACTURER DATA. (TYPICAL)
9. PROVIDE BRONZE ISOLATION BALL VALVE ABOVE CEILING OR BEHIND WALL. PROVIDE 12"X12" ACCESS PANEL WHERE INSTALLED IN AN INACCESSIBLE AREA. ACCESS PANEL EQUAL TO ACUDOR MODEL UF5000 WITH CYLINDER LOCK AND KEY AND PAINT TO MATCH THE WALL/CEILING. PROVIDE VALVE IDENTIFICATION TAGS AS PER SPECIFICATIONS. (TYPICAL)
10. INSTALL WATER CLOSET FLUSH VALVE HANDLE TOWARDS WIDE SIDE OF THE ROOM. COORDINATE WITH GENERAL CONTRACTOR.
11. FIRE SPRINKLER RISER LOCATION. SEE SPECIFICATION FOR ADDITIONAL INFORMATION.
12. PROVIDE FIRE SPRINKLER LINE WITH BACK FLOW PREVENTER ON RISER. REFER TO CIVIL DRAWING FOR FIRE LINE CONTINUATION. VERIFY SIZE OF FIRE SPRINKLER LINE BY MEANS OF CALCULATION AND COORDINATE WITH GENERAL CONTRACTOR.
13. COORDINATE FREE STANDING FDC AND PROVISION OF BACK FLOW PREVENTER WITH CIVIL.
14. PAINT ALL EXPOSED PIPING TO MATCH ARCHITECTURAL FINISHES. COORDINATE COLOR WITH ARCHITECT.
15. PROVIDE ELECTRIC WATER HEATER AS SCHEDULED. SEE ASSOCIATED DETAIL ON DETAILS SHEET.
16. RISE UP WITH 3/4" COLD WATER LINE TO ELECTRONIC TRAP PRIMER ON MEZZANINE FLOOR. REFER TO 03/P3.01.
17. PROVIDE 3/4" CW AND 3/4" HW LINES (HB-1) AT APPROXIMATELY 48" A.F.F. FOR COMMERCIAL WASHER CONNECTIONS. COORDINATE EXACT LOCATION WITH GENERAL CONTRACTOR.
18. RUN 3/4" CW LINE AND 3/4" HW LINE IN WALL CAVITY TO SUPPLY WATER TO EWH-4 AND MSB-1.
19. THREE COMPARTMENT SINK, FAUCETS AND DISPOSER SPECIFIED BY ARCHITECT (COORDINATE). PROVIDE (2) 3/4" CW AND 3/4" HW AT 8" O.C./ 16"A.F.F. DISPOSER: CONNECT 1/2" CW THRU SOLENOID VALVE VACUUM BRKR AND FLOW CONTROL.
20. HAND SINK AND FAUCET SPECIFIED BY ARCHITECT (COORDINATE). PROVIDE 1/2" CW AND 1/2" HW AT 8" O.C./16" A.F.F. PROVIDE POINT OF USE THERMOSTATIC VALVE LEONARD #270-LF-BRKT-BV OR APPROVED EQUAL.
21. RISE UP WITH 3/4" CW LINE TO ROOF HYDRANT ON ROOF. SEE ASSOCIATED DETAIL ON DETAILS SHEET.
22. PROVIDE OUTDOOR ELECTRIC DRINKING FOUNTAIN AS SCHEDULED.
23. PROVIDE CIRCULATING PUMP AS SCHEDULED. SEE ASSOCIATED DETAIL ON DETAILS SHEET.
24. PROVIDE A DUAL UNIT MANIFOLD KIT A.O. SMITH MODEL #100109231. INSTALL AS PER MANUFACTURER'S RECOMMENDATIONS.
25. CAP END OF DOMESTIC WATER LINE FOR FUTURE ADDITION OF BUILDING FIXTURES.

01 PLUMBING PLAN

SCALE : 1/8" = 1"=0"

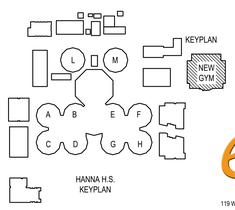

ethos engineering
119 W. VAN BUREN AVE. STE.101
HARLINGEN, TX
PHONE: 956-230-3435
TEXAS REGISTERED ENGINEERING FIRM F-15998

No.	REVISIONS	BY

GMS ARCHITECTS
1150 Paredes Line Rd.
Brownsville TX 78526
(956) 546-0110
fax (956) 546-0196

BISD Hanna ECHS Gymnasium Facility

CESAR A. GONZALEZ
108611
LICENSED
06.12.2019

© Copyright 2019
Gomez Mendez Saenz Inc.
Architects-Planners
Interior Designers

Date:	June 12, 2019
Scale:	As Noted
Project Architect:	David Monreal, AIA
Drawn By:	ETHOS
Job No.	BISD Hanna Gymnasium
Sheet:	P2.01

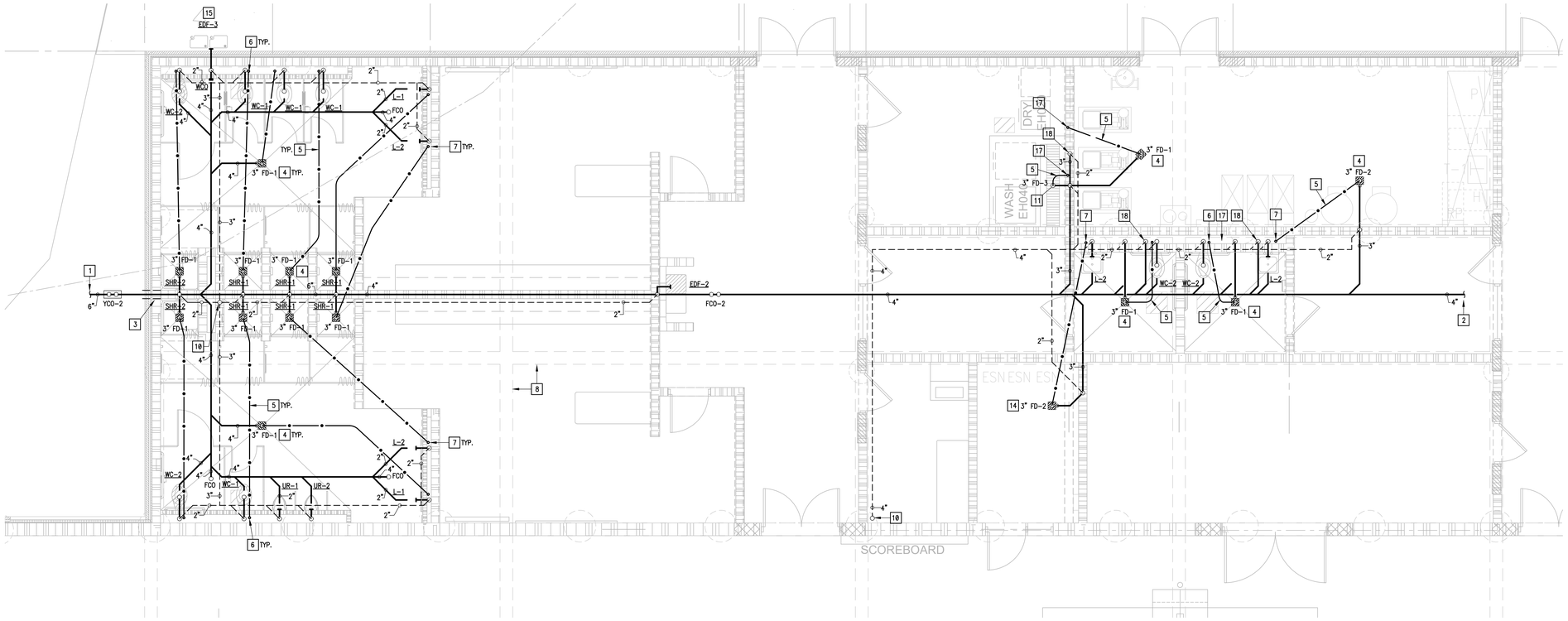

01 WASTE AND VENT PLAN

SCALE : 1/4" = 1'=0"

NORTH

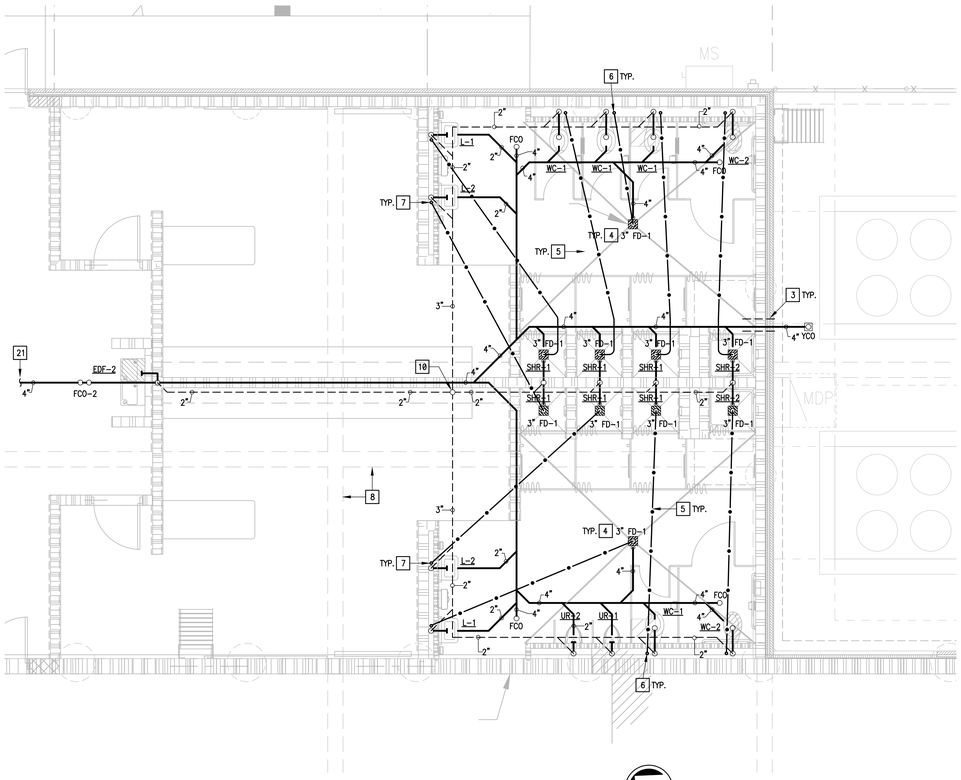

02 WASTE AND VENT PLAN

SCALE : 1/4" = 1'=0"

NORTH

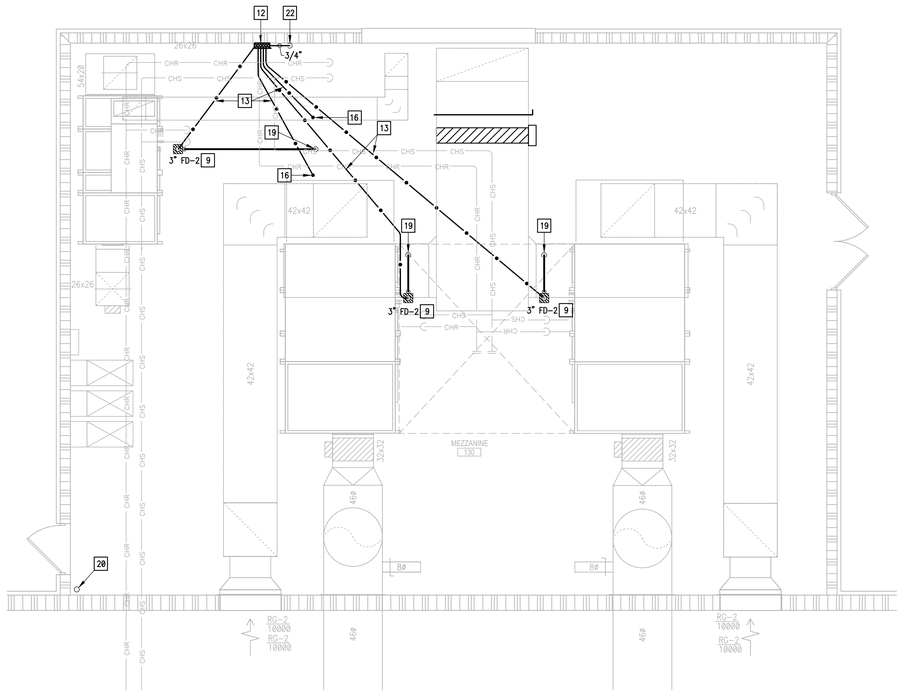

MEZANNINE 03 WASTE AND VENT PLAN

SCALE : 1/4" = 1'=0"

NORTH

KEYED NOTES:

1. REFER TO MEP SITE PLAN FOR CONTINUATION.
2. REFER TO 02/THIS SHEET FOR CONTINUATION.
3. SLEEVE ALL GRADE BEAMS, FLOOR SLABS AND MASONRY WALL PENETRATIONS PER DETAIL WHETHER SPECIFICALLY INDICATED ON PLANS OR NOT.
4. PROVIDE FLOOR DRAIN AS SCHEDULED. SET FLUSH WITH FINISHED FLOOR. SEE ASSOCIATED DETAIL ON DETAIL SHEET.
5. PROVIDE 1/2" SOFT DRAWN COPPER FROM TRAP-PRIMER. ROUTE UNDERNEATH THE POLYETHYLENE VAPOR BARRIER. PIPING SHALL NOT BE EMBEDDED IN THE CONCRETE FLOOR SLAB. ENCASE PIPING INSIDE WALL AND UNDER FLOOR SLAB IN POLYETHYLENE SLEEVE. "POLY-SLEEVE" OR EQUAL.
6. CONNECT TO (WC) FLUSH VALVE TRAP-PRIMER. SEE ASSOCIATED DETAIL ON DETAIL SHEET.
7. CONNECT TO LAVATORY P-TRAP TRAP PRIMER ZURN Z1021 OR APPROVED EQUAL.
8. STRUCTURAL FOUNDATION SHOWN FOR REFERENCE AND COORDINATION PURPOSES. REFER TO STRUCTURAL DRAWINGS FOR MORE DETAILS.
9. PROVIDE FLOOR DRAIN AS SCHEDULED AT MEZZANINE FLOOR LEVEL TO COLLECT AHU CONDENSATE. SET FLUSH WITH FINISHED FLOOR. COORDINATE EXACT LOCATION WITH MECHANICAL CONTRACTOR. ROUTE WASTE PIPING IN CEILING SPACE AND INSULATE AS PER SPECIFICATIONS.
10. PROVIDE 4" VENT UP TO 4" VENT THRU ROOF (VTR).
11. TRENCH SPECIFIED BY ARCHITECT. PROVIDE FLOOR DRAIN AS SCHEDULED (COORDINATE). SEE ASSOCIATED DETAIL ON DETAIL SHEET.
12. PROVIDE ELECTRONIC TRAP PRIMER PRECISION PLUMBING PRODUCTS (PPP) MODEL PTS-6 OR APPROVED EQUAL. PROVIDE SURFACE MOUNT CABINET WITH ACCESS DOOR. PROVIDE A COPPER DISTRIBUTION MANIFOLD WITH 6 OUTLETS AND CAP UNUSED OUTLETS. LOCATE ABOVE MEZZANINE FLOOR LEVEL. SEE ASSOCIATED DETAIL ON DETAILS SHEET.
13. ROUTE 1/2" SOFT DRAWN COPPER FROM TRAP-PRIMER IN CEILING SPACE. ENCASE PIPING INSIDE WALL IN POLYETHYLENE SLEEVE. "POLY-SLEEVE" OR EQUAL.
14. PROVIDE FLOOR DRAIN AS SCHEDULED FOR ICE MAKER DRAIN. SET FLUSH WITH FINISHED FLOOR. COORDINATE EXACT LOCATION WITH GENERAL CONTRACTOR.
15. PROVIDE OUTDOOR ELECTRIC DRINKING FOUNTAIN AS SCHEDULED.
16. 1/2" SOFT DRAWN COPPER DOWN TO 1ST FLOOR WALL CAVITY/PIPE CHASE.
17. 1/2" SOFT DRAWN COPPER DOWN FROM 2ND FLOOR MEZZANINE TRAP PRIMER AT THIS APPROXIMATE LOCATION.
18. PROVIDE 3" SANITARY SEWER PIPING DOWN FROM 2ND FLOOR CONDENSATE FLOOR DRAIN (FD-2). ROUTE INSIDE WALL CAVITY OR CHASE. INSULATE AS PER SPECIFICATIONS.
19. PROVIDE 3" SANITARY SEWER DOWN TO 1ST FLOOR. INSULATE AS PER SPECIFICATIONS.
20. PROVIDE 4" VENT THRU ROOF.
21. REFER TO 01/THIS SHEET FOR CONTINUATION.
22. CONNECT DOMESTIC COLD WATER TO ELECTRONIC TRAP-PRIMER VALVE. SEE ASSOCIATED DETAIL ON DETAIL SHEET.

No.	REVISIONS	BY

GMS ARCHITECTS
1150 Paredes Line Rd.
Brownsville TX 78526
(956) 546-0110
fax (956) 546-0196

BISD Hanna ECHS Gymnasium Facility

STATE OF TEXAS
CESAR A. GONZALEZ
108611
LICENSED ARCHITECT
06.12.2019

© Copyright 2019
Gomez Mendez Saenz Inc.
Architects-Planners
Interior Designers

Date:	June 12, 2019
Scale:	As Noted
Project Architect:	David Monreal, AIA
Drawn By:	ETHOS
Job No:	BISD Hanna Gymnasium
Sheet:	P3.01

ethos engineering
119 W. VAN BUREN AVE. STE.101
HARLINGEN, TX
PHONE: 956-230-3435
TEXAS REGISTERED
ENGINEERING FIRM
F-15998

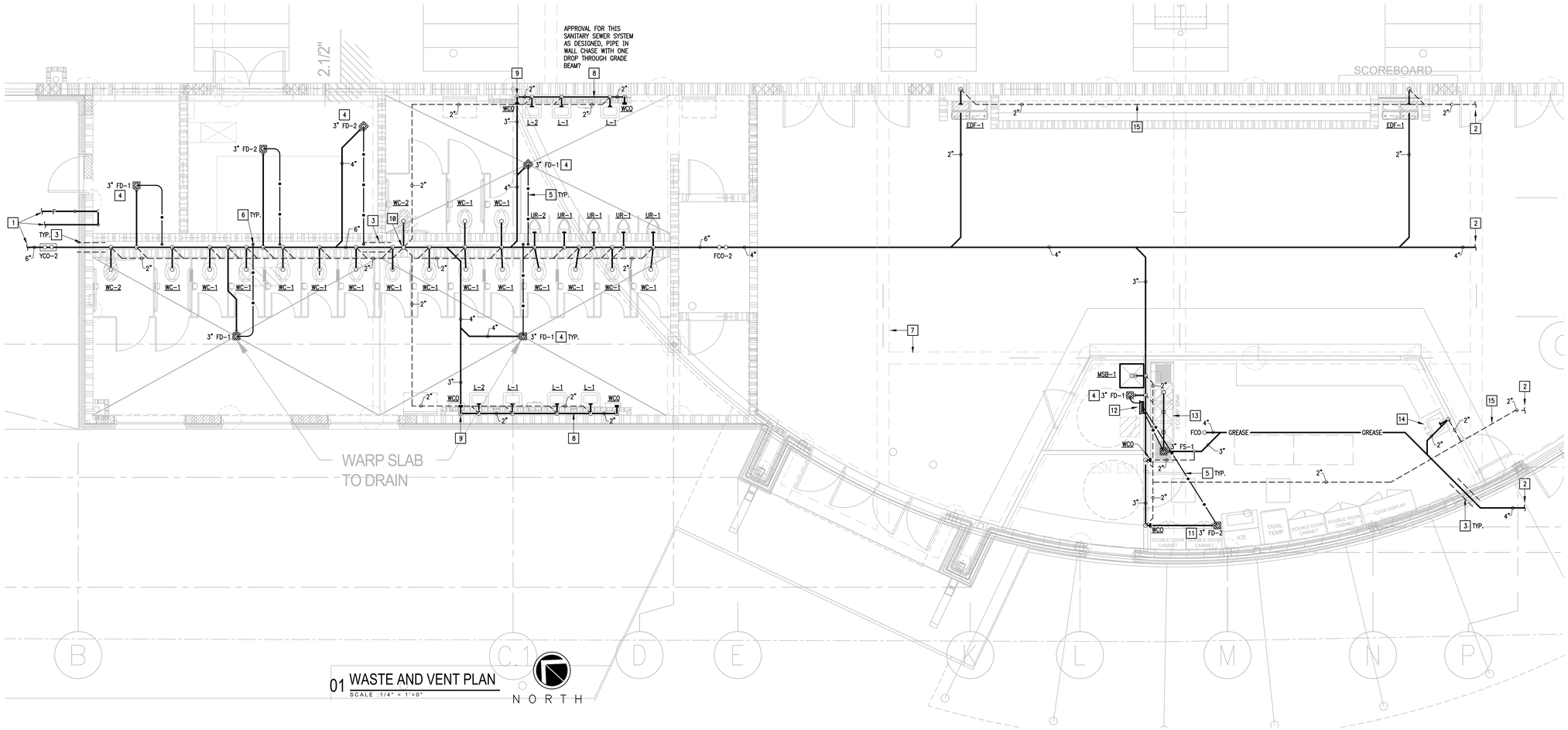

01 WASTE AND VENT PLAN
SCALE : 1/4" = 1'=0"

NORTH

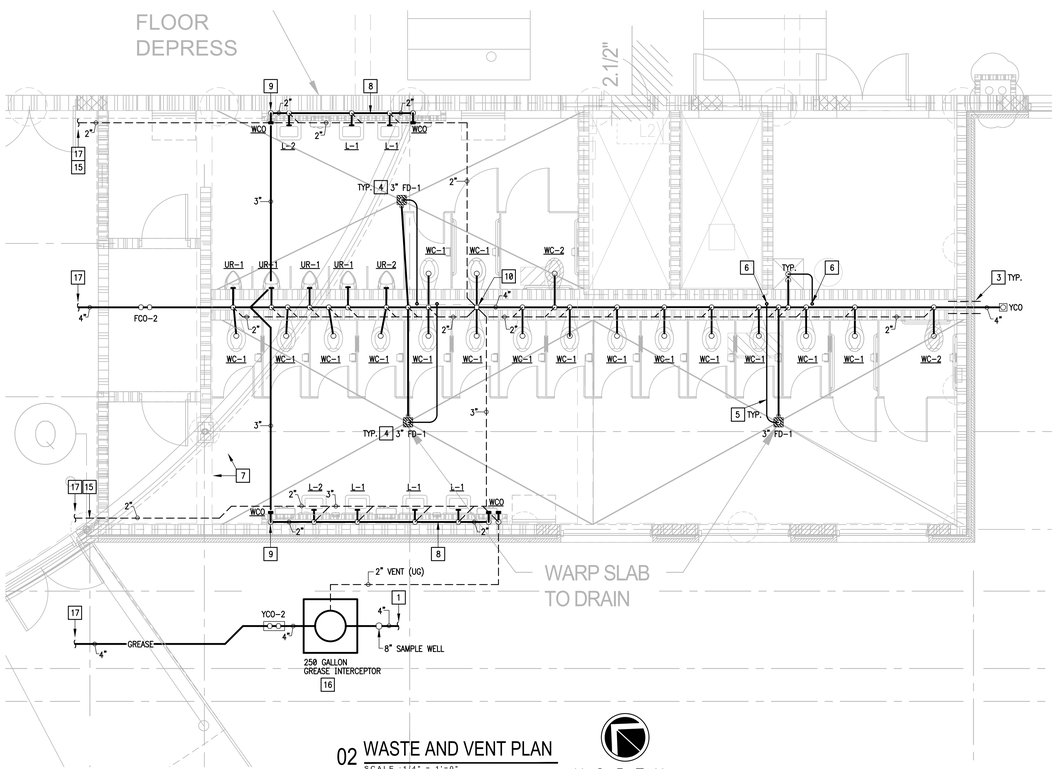

02 WASTE AND VENT PLAN
SCALE : 1/4" = 1'=0"

NORTH

KEYED NOTES:

1. REFER TO MEP SITE PLAN FOR CONTINUATION.
2. REFER TO 02/THIS SHEET FOR CONTINUATION
3. SLEEVE ALL GRADE BEAMS, FLOOR SLABS AND MASONRY WALL PENETRATIONS PER DETAIL WHETHER SPECIFICALLY INDICATED ON PLANS OR NOT.
4. PROVIDE FLOOR DRAIN AS SCHEDULED. SET FLUSH WITH FINISHED FLOOR. SEE ASSOCIATED DETAIL ON DETAIL SHEET.
5. PROVIDE 1/2" SOFT DRAWN COPPER FROM TRAP-PRIMER. ROUTE PIPING UNDERNEATH THE POLYETHYLENE VAPOR BARRIER. PIPING SHALL NOT BE EMBEDDED IN THE CONCRETE FLOOR SLAB. ENCASE PIPING INSIDE WALL AND UNDER FLOOR SLAB IN POLYETHYLENE SLEEVE. "POLY-SLEEVE" OR EQUAL.
6. CONNECT TO (WC) FLUSH VALVE TRAP-PRIMER. SEE ASSOCIATED DETAIL ON DETAIL SHEET.
7. STRUCTURAL FOUNDATION SHOWN FOR REFERENCE AND COORDINATION PURPOSES. REFER TO STRUCTURAL DRAWINGS FOR MORE DETAILS.
8. ROUTE WASTE LINE ABOVE CONCRETE SLAB INSIDE CHASE.
9. DROP WASTE LINE DOWN TO UNDERGROUND AT APPROXIMATELY THIS LOCATION. PROVIDE A WCO AT APPROXIMATELY 24" AFF.
10. PROVIDE 4" VENT UP THRU ROOF.
11. PROVIDE FLOOR DRAIN AS SCHEDULED FOR ICE MAKER DRAIN. SET FLUSH WITH FINISHED FLOOR. COORDINATE EXACT LOCATION WITH GENERAL CONTRACTOR.
12. PROVIDE ELECTRONIC TRAP PRIMER PRECISION PLUMBING PRODUCTS (PPP) MODEL PTS-4 OR APPROVED EQUAL. PROVIDE SURFACE MOUNT CABINET WITH ACCESS DOOR. PROVIDE A COPPER DISTRIBUTION MANIFOLD WITH 4 OUTLETS AND CAP UNUSED OUTLETS. SEE ASSOCIATED DETAIL ON DETAILS SHEET.
13. THREE COMPARTMENT SINK, FAUCETS AND DISPOSER SPECIFIED BY ARCHITECT (COORDINATE). PROVIDE A 2" COPPER WASTE LINE CONNECTION AND ROUTE TO FLOOR SINK, TERMINATE WITH 90 DEG. ELBOW WITH A 2" AIR GAP.
14. HAND SINK AND FAUCET SPECIFIED BY ARCHITECT (COORDINATE). PROVIDE A 1 1/2" WASTE CONNECTION THROUGH A 17 GA. P-TRAP WITH CLEANOUT.
15. ROUTE VENT LINE IN CEILING SPACE FUR DOWN. COORDINATE WITH GENERAL AND MECHANICAL CONTRACTOR.
16. PROVIDE GREASE INTERCEPTOR AS SPECIFIED. SEE ASSOCIATED DETAIL ON DETAILS SHEET.
17. REFER TO 01/THIS SHEET FOR CONTINUATION.

No.	REVISIONS	BY

GMS ARCHITECTS
1150 Paredes Line Rd.
Brownsville TX 78526
(956) 546-0110
fax (956) 546-0196

BISD Hanna ECHS
Gymnasium Facility

STATE OF TEXAS
CESAR A. GONZALEZ
108611
06.12.2019

© Copyright 2019
Gomez Mendez Saenz Inc.
Architects-Planners
Interior Designers

Date: June 12, 2019
Scale: As Noted
Project Architect: David Monreal, AIA
Drawn By: ETHOS
Job No: BISD Hanna Gymnasium
Sheet: P3.02

ethos engineering
119 W. VAN BUREN AVE. STE.101
HARLINGEN, TX
PHONE: 956-230-3435
TEXAS REGISTERED
ENGINEERING FIRM
F-15998

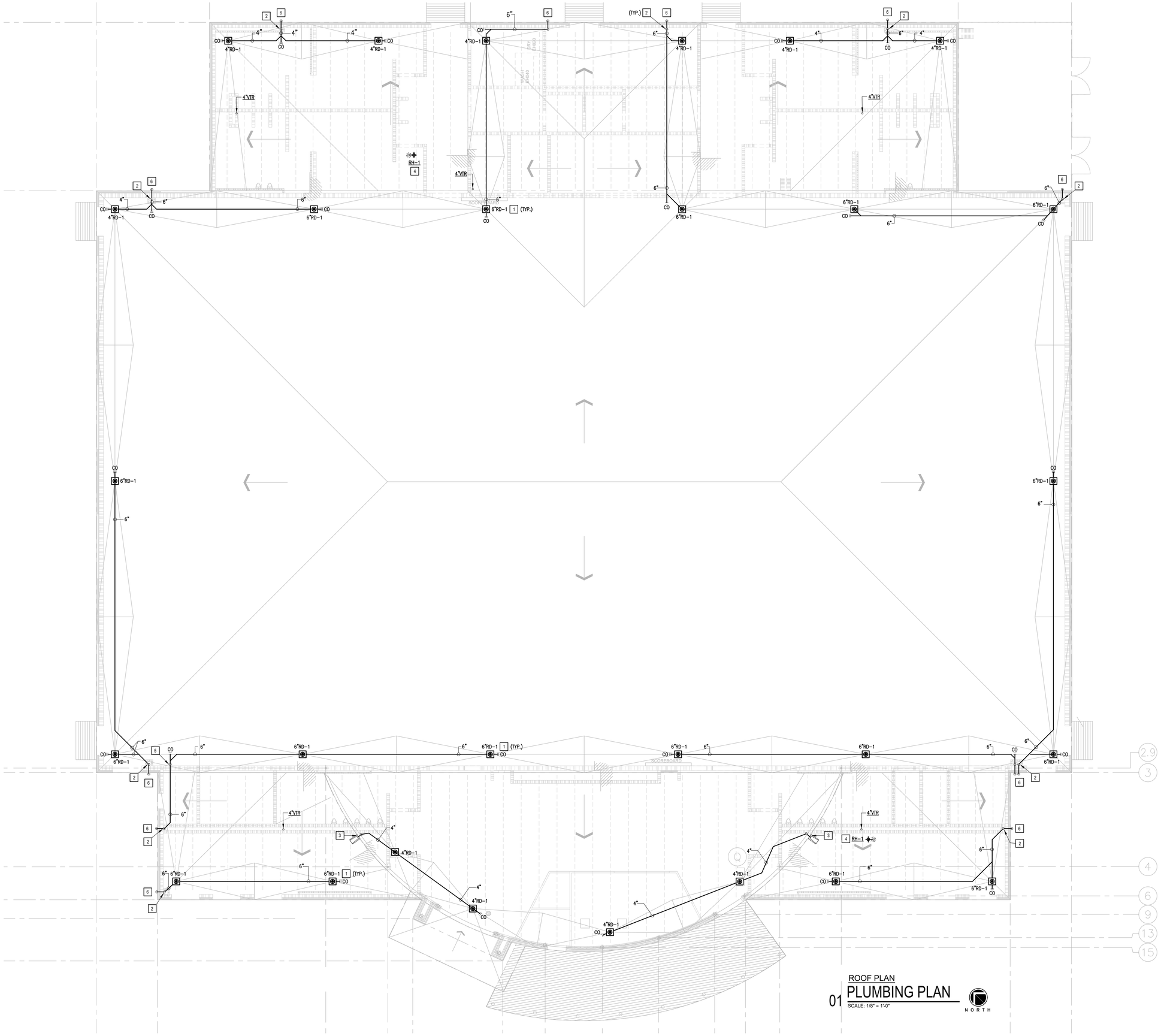

GENERAL NOTES:

1. ALL HORIZONTAL LEADERS TO BE A MINIMUM OF 1/8" PER FOOT SLOPE.
2. ALL VERTICAL LEADER LINES DOWN AND CONCEALED IN PLUMBING CHASE UNLESS OTHERWISE NOTED. REFER TO DRAWINGS.
3. COORDINATE ROOF DRAIN PIPING WITH GENERAL CONTRACTOR AND HVAC CONTRACTOR.
4. PROVIDE INSULATION ON ALL ABOVE GROUND STORM LINES. REFER TO SPECIFICATIONS FOR DETAILS.
5. STORM DRAIN PIPING AND SEWER PIPING SHOWN ON THIS PLAN TO BE INSTALLED UNDER THE ROOF.

KEYED NOTES:

1. PROVIDE ROOF DRAIN AS SCHEDULED. SEE ASSOCIATED DETAILS ON DETAILS SHEET. (TYPICAL)
2. DROP STORM DRAIN PIPING IN PIPE CHASE. REFER TO ARCHITECTURAL SHEET AND COORDINATE INSTALLATION WITH GENERAL CONTRACTOR. SEE ASSOCIATED DETAILS ON DETAILS SHEET. (TYPICAL)
3. DROP STORM DRAIN PIPING INSIDE FOYER AREA AND TERMINATE ABOVE ENTRY RESTROOMS LOWER ROOF AREA.
4. PROVIDE ROOF HYDRANT AS SCHEDULED. SEE ASSOCIATED DETAIL ON DETAILS SHEET. (TYPICAL)
5. DROP DOWN TO RESTROOM AREA CEILING SPACE.
6. ROOF DRAIN PIPING DISCHARGING AT THIS APPROXIMATE LOCATION. REFER TO PLUMBING PLAN FOR MORE DETAIL AND CIVIL PLAN FOR CONNECTION AND CONTINUATION. (TYPICAL)

ROOF PLAN

01 PLUMBING PLAN

SCALE: 1/8" = 1'-0"

NORTH

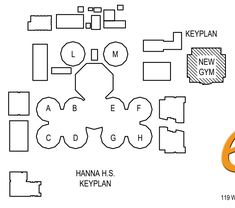

HANNA H.S.
KEYPLAN

ethos engineering
119 W. VAN BUREN AVE. STE.101
HARLINGEN, TX
PHONE: 956-230-3435
TEXAS REGISTERED
ENGINEERING FIRM
F-15998

No.	REVISIONS	BY

GMS ARCHITECTS
1150 Paredes Line Rd.
Brownsville TX 78526
(956) 546-0110
fax (956) 546-0196

BISD Hanna ECHS
Gymnasium Facility

CESAR A. GONZALEZ
108611
06.12.2019

© Copyright 2019
Gomez Mendez Saenz Inc.
Architects-Planners
Interior Designers

Date:	June 12, 2019
Scale:	As Noted
Project Architect:	David Monreal, AIA
Drawn By:	ETHOS
Job No:	BISD Hanna Gymnasium
Sheet:	P4.01

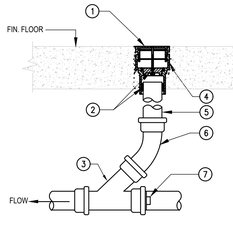

KEYED NOTES

1. FLUSH COVER
2. CLEANOUT PLUG AND BODY, SEE SPECS.
3. PVC WYE (WYE WITH REDUCING BRANCH IF MAIN IS OVER 4")
4. ADJUSTING COLLAR
5. PVC RISER
6. PVC BEND FULL SIZE, 4" MAX.
7. PLUG IF END OF LINE

01 FLOOR CLEANOUT DETAIL

SCALE : NOT TO SCALE

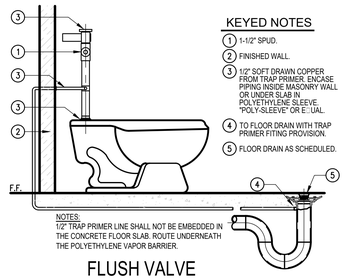

NOTES:
1/2" TRAP PRIMER LINE SHALL NOT BE EMBEDDED IN THE CONCRETE FLOOR SLAB. ROUTE UNDERNEATH THE POLYETHYLENE VAPOR BARRIER.

KEYED NOTES

1. 1-1/2" SPUD.
2. FINISHED WALL.
3. 1/2" SOFT DRAWN COPPER. FROM TRAP PRIMER. ENCASE PIPING INSIDE MASONRY WALL OR UNDER SLAB IN POLYETHYLENE SLEEVE. "POLY-SLEEVE" OR E□UAL.
4. TO FLOOR DRAIN WITH TRAP PRIMER FITTING PROVISION.
5. FLOOR DRAIN AS SCHEDULED.

02 FLUSH VALVE TRAP PRIMER DETAIL

SCALE : NOT TO SCALE

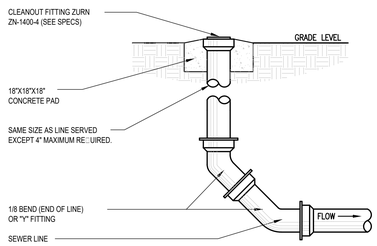

03 YARD CLEANOUT DETAIL

SCALE : NOT TO SCALE

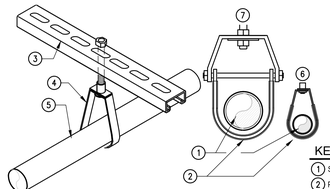

NOTES:
1. PROVIDE PLASTIC COATED HANGERS: COOPER B-LINE
2. MODEL: B3100C OR APPROVED E□UAL FOR CLEVIS
3. HANGERS. MODEL: B3172C OR APPROVED E□UAL FOR BAND HANGERS.

KEYED NOTES

1. SCHEDULED PIPE.
2. PLASTIC COATING.
3. UNI-STRUT.
4. PIPE HANGER.
5. DOMESTIC WATER LINE, COPPER DRAIN LINE FROM AHU'S.
6. BAND HANGER.
7. CLEVIS HANGER.

04 DOMESTIC WATER LINE PIPING SUPPORT DETAIL

SCALE : NOT TO SCALE

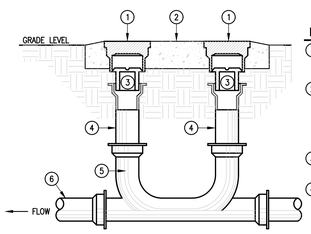

KEYED NOTES

1. PROVIDE "HEAVY DUTY" NICKLE BRONZE COVER FOR ALL EXTERIOR CLEANOUTS.
2. 48"X24"X8" DEEP CONCRETE CLEANOUT BOX (BOX IS INDEPENDANT OF PIPE AND THEREFORE IS FREE TO MOVE WITH THE SETTLEMENT OF GRADE)
3. CLEANOUT FITTING ZURN ZN-1400-4 (SEE SPECS).
4. SAME SIZE AS LINE SERVED EXCEPT 4" MAXIMUM RE□UIRED. SHORT LENGTH OF C.I. PIPE FURNISHED WITH CLEANOUT BOX.
5. DOUBLE 2-WAY CLEANOUT.
6. SEWER LINE.

05 2-WAY YARD CLEANOUT DETAIL

SCALE : NOT TO SCALE

KEYED NOTES

1. GRADE BEAM.
2. GALV. SCH.40 STEEL SLEEVE. SIZE PER SPECS. CENTER PIPE IN SLEEVE.
3. PIPING PASSING HORIZ. THROUGH GRADE BEAM SHALL BE LOCATED NO LESS THAN 6" ABOVE BOTTOM OF BEAM.
4. PIPING PASSING HORIZ. UNDER GRADE BEAM SHALL BE LOCATED A MINIMUM OF 6" BELOW BEAM. PROVIDE A SLEEVE.
5. COORDINATE LOCATIONS OF PIPING IN 3.4.5. ABOVE AS RELIEVING ARCHES OR ADDITIONAL CONCRETE MAY BE RE□UIRED TO MAINTAIN STRUCTURAL INTEGRITY OF BEAM.

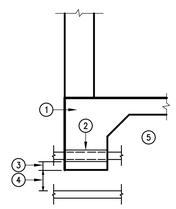

06 GRADE BEAM SLEEVE DETAIL

SCALE : NOT TO SCALE

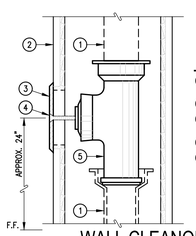

KEYED NOTES

1. PIPE SIZE AS INDICATED ON PLAN.
2. WALL.
3. S.S. SMOOTH ACCESS COVER.
4. SECURING SCREW.
5. NEW CLEANOUT.

07 WALL CLEANOUT DETAIL

SCALE : NOT TO SCALE

KEYED NOTES

1. TYPE "L" COPPER.
2. WALL HYDRANT-INSTALL LOW ENOUGH TO DRAIN RISER. (WITH LOOSE KEY TYPE).
3. SLEEVE.
4. PROVIDE 1" CLOSED-CELL INSULATION WITH ALUMINUM METAL JACKET ON EXPOSED PIPING.
5. TEE.
6. VALVE INSIDE □UAZITE BOX.

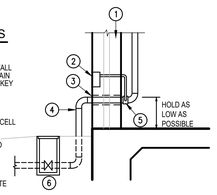

08 WATER ENTRANCE DETAIL

SCALE : NOT TO SCALE

KEYED NOTES

1. AVOID DIRECT INSTALLATION TO PREVENT FOREIGN MATERIAL FROM ENTERING DIRECTLY INTO PRIMER.
2. DOMESTIC WATER LINE.
3. ELECTRONIC TRAP PRIMING MANIFOLD WITH SURFACE MOUNT BOX. (PRECISION PLUMBING PRODUCTS MODEL □PTS-4 or 6 REFER TO PLANS)
4. TO FLOOR DRAIN TRAP PRIMER (MINIMUM 1/2" COPPER MAKE-UP WATER LINE. CAP UNUSED LINES)
5. SERVICE VALVE.
6. COPPER DISTRIBUTION MANIFOLD AS APPLICABLE.
7. SOLENOID VALVE.
8. PROVIDE LOCKABLE ACCESS DOOR.
9. ELECTRICAL POWER ENTRY 115V

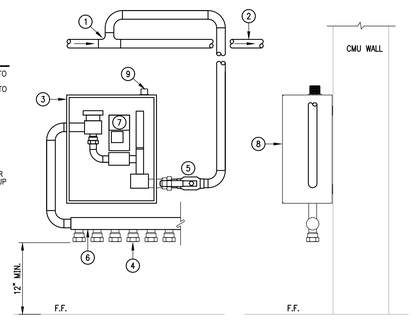

09 ELECTRONIC TRAP PRIMER DETAIL

SCALE : NOT TO SCALE

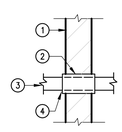

KEYED NOTES

1. MASONRY WALL.
2. GALVANIZED SCH.40 STEEL OR COPPER SLEEVE. SIZE TO BE MINIMUM 3/8" LARGER IN DIAMETER THAN PIPE AND INSULATION.
3. PLUMBING PIPE (RELIEF LINES DOMESTIC WATER, AIR, AND GAS PIPING.)
4. FILL VOID WITH MINERAL WOOL AND CAULK VERMIN TIGHT.

10 WALL SLEEVE DETAIL

SCALE : NOT TO SCALE

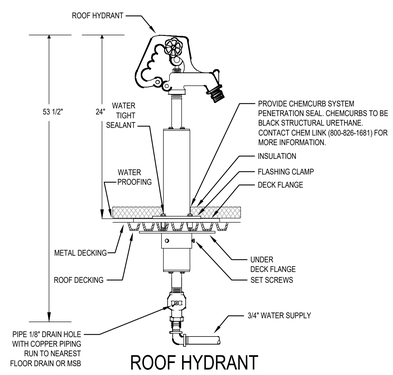

11 ROOF HYDRANT DETAIL

SCALE : NOT TO SCALE

ELECTRIC WATER HEATER SCHEDULE

MARK	LOCATION	SERVING	GALLON CAPACITY	KW	NUMBER OF ELEMENTS	RECOVERY IN GPH AT 120F RISE	ELECT. V/P/H	MANUFACTURER & MODEL	NOTES
EWH-1A	SEE PLANS	SEE PLANS	120	24	6	82	480/3/60	AO SMITH DVE-120-24	ALL
EWH-1B	SEE PLANS	SEE PLANS	120	24	6	82	480/3/60	AO SMITH DVE-120-24	ALL
EWH-2	SEE PLANS	SEE PLANS	20	3	1	10	208/1/60	AO SMITH DSE-20-3	1,2,3
EWH-3	SEE PLANS	SEE PLANS	20	3	1	10	208/1/60	AO SMITH DSE-20-3	1,2,3
EWH-4	SEE PLANS	SEE PLANS	20	3	1	10	208/1/60	AO SMITH DSE-20-3	1,2,3

NOTES:
1. MANUFACTURER & MODEL NUMBER ARE "OR APPROVED EQUAL".
2. PROVIDE INMERSION TYPE THERMOSTAT.
3. PROVIDE WITH ADVANCED ELECTRONIC CONTROL (DIGITAL DISPLAY SCREEN).
4. EWH-1A & EWH-1B: PROVIDE HOTWATER CIRCULATING PUMP. REFER TO PUMP SCHEDULE FOR MORE INFORMATION.
5. EWH-1A & EWH-1B: PROVIDE A DUAL UNIT MANIFOLD KIT A.O. SMITH MODEL #100109231.

CIRCULATING PUMP SCHEDULE

MARK	TYPE	SERVES	LOCATION	GPM	HEAD FT WG	MIN. HP	RPM	CONN. SIZE (IN.)	IMPELLER DIA. (IN.)	ELEC. V-PH-HZ	WEIGHT (LBS)	NOTES	MANUFACTURER AND MODEL
CP-1	CIRCULATING PUMP	EWH-1A EWH-1B	SEE PLAN	5	20	1/12	3300	3/4	3	120-1-60	13	ALL	BELL & GOSSETT PL-30B

NOTES:
1. PROVIDE BRONZE BOOSTER BODY.
2. PUMPS SHALL BE OPERATED AND CONTROLLED THRU THE LIGHTING RELAY PANEL AND THRU AQUASTAT. COORDINATE WITH ELECTRICAL CONTRACTOR.
3. REFER TO DETAIL SHEET FOR MORE INFORMATION.

PLUMBING SYMBOLS LEGEND

	COLD WATER SUPPLY	WCO	WALL CLEANOUT
	HOT WATER SUPPLY		*GATE VALVE (GV)
	HOT WATER RETURN		□BALL VALVE
	GAS LINE		VALVE IN RISER TYPE AS NOTED
	SOIL □WASTE LINE - ENLARGED PLANS	WC	WATER CLOSET
	VENT LINE - ENLARGED PLANS	UR	URINAL
	ACID WASTE LINE - ENLARGED PLANS	L	LAVATORY
	GREASE WASTE LINE - ENLARGED PLANS	SK	SINK
	FIRE SPRINKLER LINE	EDF	ELECTRIC DRINKING FOUNTAIN
FCO	FLOOR CLEANOUT	MSB	MOP SERVICE BASIN
FCO-2	FLOOR CLEANOUT - 2 WAY	EESHR	EMERGENCY EYE/SHOWER
FD FD	FLOOR DRAIN (FD) WITH DEEP SEAL TRAP	TP	TRAP PRIMER
HD	HUB DRAIN WITH DEEP SEAL TRAP	EWH	ELECTRIC WATER HEATER
	FLOOR SINK	VTR	VENT THRU ROOF
YCO	YARD CLEANOUT	CO	CLEANOUT
YCO-2	YARD CLEANOUT - 2 WAY	A.F.F.	ABOVE FINISH FLOOR
WH	WALL HYDRANT	ADT	ACID DILUTION TANK
	TRAP PRIMER	GT	GREASE TRAP
	□WATER HAMMER		

□PROVIDE 12"x12" ACCESS PANEL WHERE INSTALLED IN AN INACCESSIBLE AREA.

GENERAL NOTES:

1. ALL PLUMBING WORK SHALL BE IN COMPLIANCE WITH ALL APPLICABLE CODES AS ADAPTED AND AMENDED BY THE INSPECTING AUTHORITIES.
2. DRAWING IS DIAGRAMMATIC ONLY. CONTRACTOR SHALL COORDINATE EXACT LOCATIONS OF PIPING, DEVICES AND E□UIPMENT WITH BUILDING ELEMENTS AND THE WORK OF OTHER TRADES.
3. ALL PLUMBING WORK SHALL BE INSTALLED SO AS TO AVOID CONFLICT WITH THE WORK OF OTHER TRADES. COORDINATE WITH MECHANICAL, ELECTRICAL AND STRUCTURAL FOR PROPER CLEARANCES.
4. REFER TO ARCHITECTURAL DRAWINGS AND SPECIFICATIONS FOR PHASING AND SE□UENCE OF CONSTRUCTION WORK.
5. COORDINATE WORK AMONG ALL DISCIPLINES. IT IS NOT THE INTENT OF THESE DOCUMENTS TO DICTATE WHO MUST DO THE WORK. ALL WORK SHOWN IS THE RESPONSIBILITY OF THE PRIME CONTRACTOR.
6. SLEEVE ALL OUTSIDE WALLS, FOUNDATION GRADE BEAMS, INTERIOR WALL PENETRATIONS, AND FIRE SEAL ALL PENETRATION THROUGH FIRE WALLS AND FLOORS WHETHER SHOWN ON PLANS OR NOT.
7. PROVIDE MINIMUM 15' OF SEPARATION BETWEEN HVAC INTAKES AND VENT THRU ROOFS.
8. RECORD INVERT ELEVATIONS OF ALL YARD CLEAN OUT (YCO) ON "AS-BUILT" DRAWINGS.
9. PROVIDE SHUT-OFF VALVES (STOPS) ON ALL ROUGH-INS TO FIXTURES AND E□UIPMENTS.
10. PROVIDE WATER HAMMER ARRESTORS AS INDICATED ON THE DRAWINGS. AIR CHAMBERS NOT AN APPROVED SUBSTITUTE.
11. PROVIDE ANY BACKFLOW PREVENTION DEVICE RE□UIRED BY CODE OR LOCAL AUTHORITIES. CONTRACTOR SHALL VERIFY THIS WITH CITY AND LOCAL AGENCIES AND INCLUDE COST IN BID. CONTRACTOR TO HAVE BACK FLOWS CERTIFIED.
12. REFER TO PLUMBING FIXTURE ROUGH-IN SCHEDULE FOR INDIVIDUAL PIPE CONNECTIONS TO FIXTURES.
13. PRIOR TO POURING FOUNDATION AND ERECTING CMU WALLS, COORDINATE INSTALLATION OF PLUMBING FIXTURE CARRIERS WITH GENERAL CONTRACTOR.
14. METAL STUDS AT DRY WALLS SHALL NOT BE CUT THRU HORIZONTAL DIRECTION. COORDINATE WITH DRY WALL CONTRACTOR.

PLUMBING FIXTURE SCHEDULE

MARK	MANUFACTURER & MODEL NUMBER	DESCRIPTION	CONNECTIONS WASTE	VENT	CW	HW	NOTES	REMARKS
WC-1	AMERICAN STD. 3451.001 SLOAN ROYAL #111-1.28 SEAT 5901.100	15" HIGH LOW CONSUMPTION FLUSH VALVE, WHITE VITREOUS CHINA WATER CLOSET WITH ELONGATED SIPHON JET ACTION BOWL, 1.28GPF TOP FLUSH VALVE, WHITE OPEN FRONT SEAT LESS COVER AND BOLT CAPS FOR ADULT STANDARD MOUNTING.	4"	2"	1"	–	1,3	15" TO TOP OF RIM
WC-2	AMERICAN STD. 3461.001 SLOAN ROYAL #111-1.28 SEAT 5901.100	16-1/2" HIGH LOW CONSUMPTION FLUSH VALVE, WHITE VITREOUS CHINA WATER CLOSET WITH ELONGATED SIPHON JET ACTION BOWL, 1.28GPF TOP FLUSH VALVE, WHITE OPEN FRONT SEAT LESS COVER AND BOLT CAPS FOR ADULT ADA MOUNTING.	4"	2"	1"	–	1,2,3	17"-19" TO TOP OF SEAT
UR-1	AMERICAN STD. 6590.001 SLOAN ROYAL #186-0.5 ZURN # Z1222 CARRIER	WALL MOUNTED FLUSH VALVE, WHITE VITREOUS CHINA LOW CONSUMPTION 0.5 GPF URINAL WITH 14" DEEP BOWL, 3/4" TOP SPOUT FLUSH VALVE AND CARRIER FOR ADULT STANDARD MOUNTING	3"	2"	3/4"	–		22" TO RIM OF BASIN
UR-2	SAME AS UR-1	SAME AS UR-1 EXCEPT FOR ADULT ADA MOUNTING	3"	2"	3/4"	–	2	17" TO RIM OF BASIN
L-1	KOHLER KINGSTON K-2005 CHICAGO FAUCETS 420-T41E2805ABCP 0.5 GPM AERATOR ZURN #Z1231 CARRIER 17 GA. DRAIN AND 17 GA. P-TRAP W/CLEAN OUT TRUEBRO KIT	21" X 18" WALL MOUNTED WHITE VITREOUS CHINA, 4" ON CENTER HOLES LAVATORY WITH FRONT OVERFLOW AND CONCEALED ARMS SUPPORT. SINGLE LEVER, 4" ON CENTER, CHROME PLATED SOLID BRASS CONSTRUCTION FAUCET WITH THERMOSTATIC MIXING VALVE, ASSE 1070 COMPLAINT, SCALDING PROTECTION INCLUDED, SET AT 110 DEGREES. CHROME PLATED SUPPLY STOPS AND ESCUTCHEONS WITH STAINLESS STEEL FLEXIBLE CONNECTORS, CHROME PLATED DRAIN GRID AND TAILPIECE, P-TRAP AND CARRIER FOR ADULT STANDARD MOUNTING	2"	2"	1/2"	1/2"	3,4,5	32" FROM FLOOR TO RIM
L-2	SAME AS L-1	SAME AS L-1 EXCEPT FOR ADULT ADA MOUNTING	2"	2"	1/2"	1/2"	3,4,5	34" FROM FLOOR TO RIM
SHR-1	LEONARD SURFASHOWER WALL-MOUNTED SHOWER SYSTEM SS-PAM-200/3ISA STANDARD	STAINLESS STEEL COVER, SLOPING TOP CAP, BOTTOM CAP, 18 GA., #4 FINISH WALL MOUNTED SHOWER SYSTEM WITH PRESSURE BALANCING VALVE ASSE 1016 LISTED WITH LOW FLOW INSTITUTIONAL 1.5GPM SHOWERHEAD AND VANDAL RESISTANT SCREWS. SET HOT WATER TEMPERATURE AT 110 DEG. HIGH SCHOOL STANDARD MOUNTING.	3"	2"	1/2"	1/2"		
SHR-2	LEONARD SURFASHOWER WALL-MOUNTED SHOWER SYSTEM SS-PAM-200/3ISA-D2L 5819C(G)-44 ADA COMPLIANT	STAINLESS STEEL COVER, SLOPING TOP CAP, BOTTOM CAP, 18 GA., #4 FINISH WALL MOUNTED SHOWER SYSTEM WITH PRESSURE BALANCING VALVE ASSE 1016 LISTED WITH LOW FLOW INSTITUTIONAL 1.5GPM SHOWERHEAD AND VANDAL RESISTANT SCREWS. INLINE DIVERTER VALVE WITH LEVER HANDLE, 69" HAND HELD SHOWER AND 24" GLIDE BAR. SET HOT WATER TEMPERATURE AT 110 DEG. HIGH SCHOOL ADA MOUNTING.	3"	2"	1/2"	1/2"		
MSB-1	FIAT TSB 3000 MOP BASIN #832-AA HOSE & BRACKET #830-AA FAUCET #889-CC MOP BRACKET #MSC 2424 WALL GUARD #1453-BB STRAINER	24X24X12 PRECAST TERRAZO MOP SERVICE BASIN WITH HOSE AND HOSE BRACKET, FAUCET, MOP BRACKET, WALL GUARD AND STRAINER.	3"	2"	3/4"	3/4"		
WH-1	ZURN # Z1300-SS-34UN HYDRANT	ENCASED NON-FREEZE ANTI-SIPHON WALL HYDRANT, BRONZE, NON-TURNING OPERATING ROD STOP VALVE IN SUPPLY, KEY OPERATED CONTROL VALVE, STAINLESS STEEL BOX WITH HINGED COVER.	–	–	3/4"	–		
WH-2	ZURN # Z1350 HYDRANT	ENCASED MODERATE CLIMATE WALL HYDRANT FOR NARROW WALL, CHROME, SCREWDRIVER OPERATED STOP VALVEIN SUPPLY, KEY OPERATED CONTROL						
HB-1	WOODFORD 24	WALL FAUCET WITH ANTI-SIPHON VACUUM BREAKER, 3/4" INLET AND 3/4" MALE HOSE THREAD, FLUSH MOUNTED, POLISHED BRASS, FOR MILD CLIMATE AREAS.	–	–	3/4"	3/4"		
FD-1	ZURN # ZN415B-P	BODY ASSEMBLY WITH TYPE B STRAINER, DURA COATED CAST IRON BODY WITH BOTTOM OUTLET INVERTED MEMBRANE CLAMP AND ADJUSTABLE COLLAR WITH TRAP PRIMER CONNECTION.	3"	2"	–	–		
FD-2	ZURN # ZN415I-P	BODY ASSEMBLY WITH TYPE I STRAINER, DURA COATED CAST IRON BODY WITH BOTTOM OUTLET INVERTED MEMBRANE CLAMP AND ADJUSTABLE COLLAR WITH TRAP PRIMER CONNECTION.	3"	2"	–	–		
FS-1	ZURN ZN1901-KC-P-2 Z1023 TRAP PRIMER CONNECTION DAPTER	BOTTOM OUTLET CAST IRON BODY, 12" SQUARE NICKEL BRONZE 1/2 GRATE AND RIM, ANCHOR FLANGE, 8" DEEP SUMP WITH A.R.E. INTERIOR, ALUMINUM DOME BOTTOM STRAINER. PROVIDE CLAMPING DEVICE FOR DRAINS IN MEMBRANE FLOOR AREAS.	4"	2"	–	–		
IMB	GUY GRAY BIM875	VALVE, STAINLESS STEEL BOX WITH HINGED COVER GALVANIZED STEEL ICE MACHINE BOX, FURNISHED WITH 1/2" FIP INLET X 1/4" OD OUTLET COMPRESSION ANGLE VALVE.	–	–	3/4"	–		
RD-1	MIFAB 1200-W	15" DIA. LARGE SUMP ROOF DRAIN, GALV. SUMP RECEIVER CAST IRON DRAIN BODY, C.I. WATERPROOFING MEMBRANE CLAMP RING WITH INTEGRAL GRAVEL STOP,OVERFLOW STANDPIPE, SELF-LOCKING POLYETHYLENE DOME STRAINER.	SEE PLANS					
WMB	GUY GRAY B200	GALVANIZED STEEL WASHING MACHINE BOX, FURNISHED WITH QUARTER TURN BALL VALVE AND TWO 1/2" MIP/SWEAT CONNECTON VALVE AND A 1-1/2" OR 2" THREADED DRAIN FITTING & LOCKNUT.	1-1/2" OR 2"	–	3/4"	3/4"		
EDF-1	ELKAY VRCTLBSC LKAPREZL APRON ZURN Z-1225 CARRIER	BI-LEVEL ELECTRIC DRINKING FOUNTAIN, FRONT AND SIDE TOUCH CONTROLS, 8.0 GPH, FLEXI GUARD SAFETY BUBBLERS, PVC P-TRAP, APRON AND CARRIER. FOR ADULT STANDARD & ADA MOUNTING. OUTDOOR RATED, VANDAL RESISTANT. PROVIDE WATER SENTRY FILTER 51300C.	2"	2"	3/4"	–		SEE ARCHITECTURAL
EDF-2	ELKAY VRCTLBWSK/EZH20 LKAPREZL APRON ZURN Z-1225 CARRIER	BI-LEVEL ELECTRIC DRINKING FOUNTAIN W/ ELECTRONIC BOTTLE FILLER BUTTON MECHANICAL FRONT BUBBLER ACTIVATION. 8.0 GPH, FLEXI GUARD SAFETY BUBBLERS, PVC P-TRAP, APRON AND CARRIER. FOR ADULT STD & ADA MOUNTING. VANDAL RESISTANT. PROVIDE WATER SENTRY FILTER 51300C.	2"	2"	3/4"	–		SEE ARCHITECTURAL
EDF-3	ELKAY VRCTLDQWSK/EZH20 LKAPREZL APRON ZURN Z-1225 CARRIER	ELKAY EZH20 VANDAL-RESISTANT BOTTLE FILLING STATION, ADA, BI-LEVEL, ELECTRIC, NON-REFRIGERATED STAINLESS STEEL DRINKING FOUNTAIN FOR OUTDOOR USE. FURNISHED WITH VANDAL-RESITANT BUBBLER. ELECTRONIC BOTTLE FILLER BUTTON WITH MECHANICAL FRONT BUBBLER BUTTON ACTIVATION. UNIT SHALL BE LEAD-FREE DESIGN. PROVIDE APRON AND CARRIER FOR WALL MOUNT FOR ADULT STD. AND ADA MOUNTING. PROVIDE WATER SENTRY FILTER 51300C.	3"	–	3/4"	–		SEE ARCHITECTURAL
RH-1	JAY R. SMITH 5906	NON-FREEZE ROOF HYDRANT WITH GALV. CASING AND ADJUSTABLE FLOW WHEEL LOCK HANDLE WITH DECK FLANGE AND UNDEER DECK CLAMP.	2"	–	3/4"	–		

NOTES:
1. INSTALL FLUSH VALVE ON THE WIDE SIDE OF STALL.
2. PROVIDE ADA APPROVED FLUSH VALVE HANDLE FOR ALL ADA PLUMBING FIXTURES.
3. REFER TO PLUMBING PLAN FOR FIXTURES THAT WILL REQUIRE TRAP PRIMER CONNECTIONS.
4. PROVIDE TRUEBRO LAVATORY GUARD MODEL #103 COLOR WHITE. COVER SHALL BE SECURED WITH SNAP-SLIP FLUSH REUSABLE FASTENERS.
5. ANGLE STOPS SHALL HAVE LOCK-UP LOCKING ACCESS COVERS.

No.	REVISIONS	BY

GMS ARCHITECTS
1150 Paredes Line Rd.
Brownsville TX 78526
(956) 546-0110
fax (956) 546-0196

BISD Hanna ECHS Gymnasium Facility

STATE OF TEXAS
CESAR A. GONZALEZ
108611
LICENSED PROFESSIONAL ENGINEER
06.12.2019

© Copyright 2019
Gomez Mendez Saenz Inc.
Architects-Planners
Interior Designers

Date: June 12, 2019
Scale: As Noted
Project Architect: David Monreal, AIA
Drawn By: ETHOS
Job No: BISD Hanna Gymnasium
Sheet: P5.01

ethos engineering
119 W. VAN BUREN AVE. STE.101
HARLINGEN, TX
PHONE: 956-230-3435
TEXAS REGISTERED
ENGINEERING FIRM
F-15998

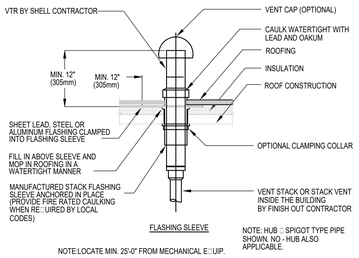

NOTE:LOCATE MIN. 25'-0" FROM MECHANICAL E□UIP.

01 VENT THRU ROOF DETAIL

SCALE : NOT TO SCALE

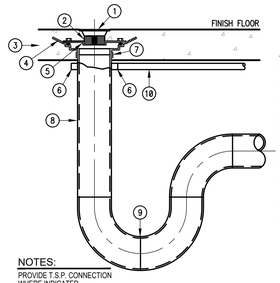

KEYED NOTES

1. TYPE B STRAINER.
2. ADJUSTABLE DRAIN HEAD.
3. CONCRETE.
4. MEMBRANE.
5. FLASHING COLLAR.
6. TRAP PRIMER FITTING PROVISION.
7. S.S. "NO-HUB" ASSEMBLY.
8. PIPE SIZE AS INDICATED ON PLAN.
9. DEEP SEAL P-TRAP.
10. 1/2" SOFT DRAWN COPPER FROM TRAP PRIMER. ENCASE PIPING INSIDE MASONRY WALL OR UNDER SLAB IN POLYETHYLENE SLEEVE. "POLY-SLEEVE" OR E□UAL.

NOTES:

PROVIDE T.S.P. CONNECTION WHERE INDICATED.
1/2" TRAP PRIMER LINE SHALL NOT BE EMBEDDED IN THE CONCRETE FLOOR SLAB. ROUTE UNDERNEATH THE POLYETHYLENE VAPOR BARRIER.

02 FD-1 FLOOR DRAIN WITH TRAP PRIMER DETAIL

SCALE : NOT TO SCALE

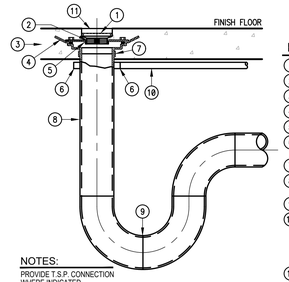

KEYED NOTES

1. TYPE I STRAINER.
2. ADJUSTABLE DRAIN HEAD.
3. CONCRETE.
4. Mmembrane.
5. FLASHING COLLAR.
6. TRAP PRIMER FITTING PROVISION.
7. S.S. "NO-HUB" ASSEMBLY.
8. PIPE SIZE AS INDICATED ON PLAN.
9. DEEP SEAL P-TRAP.
10. 1/2" SOFT DRAWN COPPER FROM TRAP PRIMER. ENCASE PIPING INSIDE MASONRY WALL OR UNDER SLAB IN POLYETHYLENE SLEEVE. "POLY-SLEEVE" OR E□UAL.
11. SET EXTENDED RIM FLUSH WITH FINISHED FLOOR.

NOTES:

PROVIDE T.S.P. CONNECTION WHERE INDICATED.
1/2" TRAP PRIMER LINE SHALL NOT BE EMBEDDED IN THE CONCRETE FLOOR SLAB. ROUTE UNDERNEATH THE POLYETHYLENE VAPOR BARRIER.

03 FD-2 FLOOR DRAIN WITH TRAP PRIMER DETAIL

SCALE : NOT TO SCALE

NOTE:
PROVIDE HEAT TRAP DEVICE OR AN ARRANGEMENT OF TUBING AS PER IEEC. INSULATE THE FIRST 8' OF OUTLET PIPING AND THE INLET PIPING BETWEEN THE STORAGE TANK AND A HEAT TRAP (INCLUDE THE HEAT TRAP).

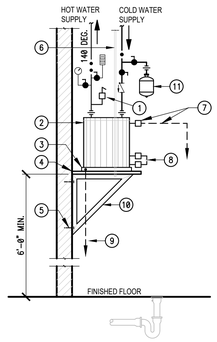

KEYED NOTES

1. POP-OFF VALVE/ANTI-SIPHON DEVICE.
2. ELECTRIC WATER HEATER AS SCHEDULED.
3. PAN WITH DRAIN.
4. 3/4" MIN. MOISTURE RESISTANT PLYWD.
5. SECURE TO WALL AS RE□UIRED.
6. (2) 3/8"Ø RODS. SECURE TO STRUCTURE.
7. RELIEF VALVE WITH 3/4"MIN. COPPER DRAIN LINE TO MOP SINK OR OPEN DRAIN.
8. HEATING ELEMENT AS SPEC'D.
9. COPPER DRAIN LINE TO MOP SINK OR OPEN DRAIN.
10. (2) KNEE BRACES, L 1.25X1.25X.25 GALV., □ 8" O.C. WITH WELDED JOINTS.
11. EXPANSION TANK: WESSELS COMPANY MODEL TTA-5.

04 WALL MOUNTED (EWH-2 THRU EWH-4) ELECTRIC WATER HEATER DETAIL

SCALE : NOT TO SCALE

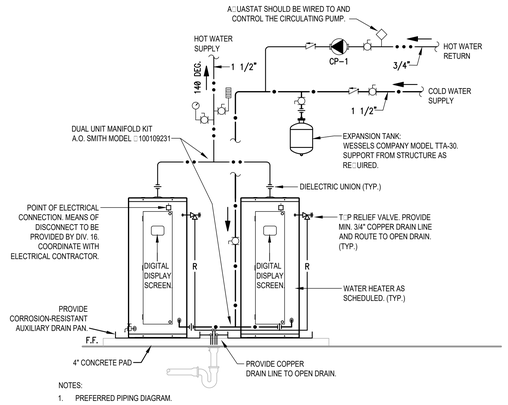

NOTES:

1. PREFERRED PIPING DIAGRAM.
2. THE TEMPERATURE AND PRESSURE RELIEF VALVE SETTING SHALL NOT EXCEED PRESSURE RATING OF ANY COMPONENT IN THE SYSTEM.
3. PROVIDE HEAT TRAP DEVICE OR AN ARRANGEMENT OF TUBING AS PER IECC. INSULATE THE FIRST 8' OF OUTLET PIPING AND THE INLET PIPING BETWEEN THE STORAGE TANK AND HEAT TRAP (INCLUDE THE HEAT TRAP).

LEGEND

TEMPERATURE □ PRESSURE RELIEF VALVE	CHECK VALVE	FULL PORT BALL VALVE	PRESSURE GAUGE
A□UASTAT	DRAIN	TEMPERATURE GAGE	CIRCULATING PUMP

05 FLOOR MOUNTED (EWH-1A □ EWH-1B) ELECTRIC WATER HEATER DETAIL

SCALE : NOT TO SCALE

NOTES:

1. POWER TO PUMP TO BE CONTROLLED BY HVAC BUILDING AUTOMATION SYTEM. COORDINATE WITH ELECTRICAL CONTRACTOR.
2. LINE VOLTAGE A□UASTAT CONTROLLER FURNISHED AND INSTALLED BY PLUMBING CONTRACTOR. CONNECTED BY ELECTRICAL CONTRACTOR. A□UASTAT CLOSES WHEN STORAGE TANK WATER TEMPERATURE DROPS BELOW 120°F (ADJ.).
3. CIRCULATING PUMP FURNISHED AND INSTALLED BY PLUMBING CONTRACTOR. CONNECTED BY DIV. 26.

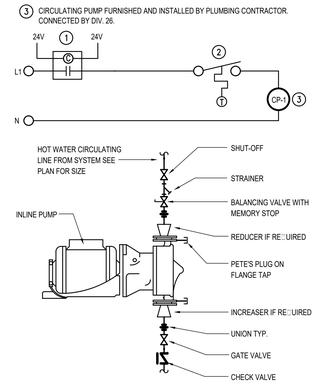

06 CIRCULATING PUMP WIRING SCHEMATIC □ DETAIL

SCALE : NOT TO SCALE

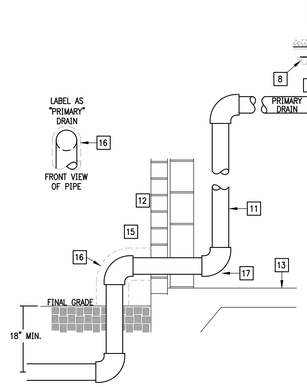

ROOF DRAIN DETAIL KEYED NOTES:

1. ROOF DRAIN
2. DRAIN BODY
3. UNDER DECK CLAMP
4. ROOF SUMP RECEIVER
5. EXTENSION COLLAR
6. 4# LEAD FLASHING–EXTEND MINIMUM 12" FROM DRAIN BODY
7. COUNTER FLASHING
8. ROOF DECK
9. MINIMUM 1/4" PER FEET SLOPE ON HORIZONTAL RUNS
10. RUBBER "O" RINGS TYPE EXPANSION COUPLING WITHIN 4 FEET OF EACH ROOF DRAIN.
11. RAIN WATER CONDUCTOR INSIDE PIPE CHASE
12. WALL
13. FLOOR
14. ROOF
15. PROVIDE DOWNSPOUT NOZZLE EQUAL TO JOSAM 2510.
16. ALUMINUM METAL JACKET
17. FILL BLOCK WITH CONCRETE AT ELBOW AREA

07 RD-1 PRIMARY ROOF DRAIN DETAIL

SCALE : NOT TO SCALE

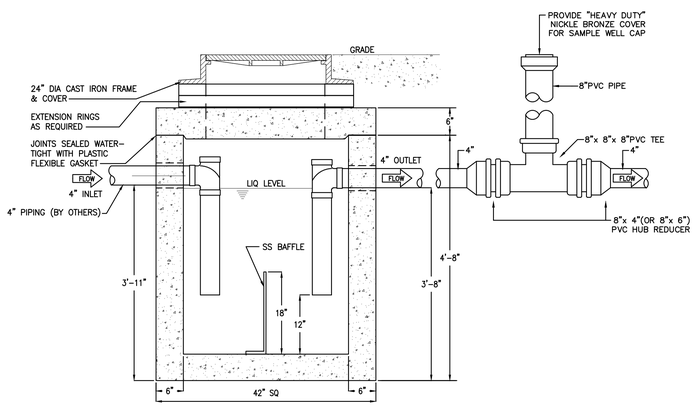

08 GREASE INTERCEPTOR DETAIL

SCALE : NOT TO SCALE

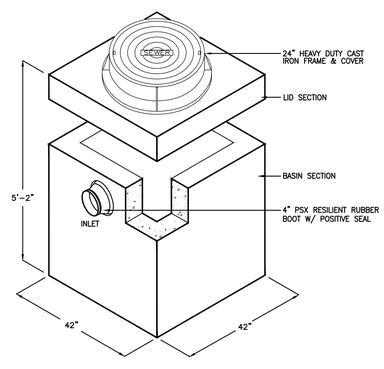

GREASE INTERCEPTOR SCHEDULE								
MODEL NO.	CAPACITY USGal	TOTAL WEIGHT LBS	LENGTH L	WIDTH W	HEIGHT H	INLET FL1	OUTLET FL2
GT-250	250	7,200	3'-6"	3'-6"	5'-2"	3'-11"	3'-8"

CONCRETE : CLASS I/II CONCRETE WITH OF DESIGN STRENGTH OF 4500 PSI AT 28 DAYS. UNITS IS OF MONOLITHIC CONSTRUCTION AT FLOOR AND FIRST STAGE OF WALL WITH SECTIONAL RISER TO REQUIRED DEPTH. RATED FOR H-20 LOADING.

REINFORCEMENT: GRADE 60 REINFORCED WITH STEEL REBAR TO CONFORM TO ASTM A615 ON REQUIRED CENTERS OR EQUAL.

C.I. CASTINGS: CAST IRON FRAMES AND GRATES ARE MANUFACTURED OF GREY CAST IRON CONFORMING TO ASTM A48 CLASS 35.

ENGINEERING DATA: INTERCEPTOR IS STRUCTURALLY AND HYDRAULICALLY ENGINEERED CONFORMING TO UNIFORM PLUMBING CODE.

NOMINAL LIQUID CAPACITY AS INDICATED ON PLAN. SHOP DRAWINGS SHALL INCLUDE COMPLETE STRUCTURAL & BOUYANCY CALCULATIONS CERTIFIED BY A REGISTERED ENGINEER.

FIELD EXCAVATION AND PREPARATION SHALL BE COMPLETED PRIOR TO DELIVERY OF INTERCEPTOR. USE DIMENSIONAL DATA AS SHOWN.

ethos engineering
119 W. VAN BUREN AVE. STE 101
HARLINGEN, TX
PHONE: 956-230-3435
TEXAS REGISTERED ENGINEERING FIRM F-15998

No.	REVISIONS	BY

GMS ARCHITECTS
1150 Paredes Line Rd.
Brownsville TX 78526
(956) 546-0110
fax (956) 546-0196

BISD Hanna ECHS Gymnasium Facility

CESAR A. GONZALEZ
108611
06.12.2019

© Copyright 2019
Gomez Mendez Saenz Inc.
Architects-Planners
Interior Designers

Date: June 12, 2019
Scale: As Noted
Project Architect: David Monreal, AIA
Drawn By: ETHOS
Job No: BISD Hanna Gymnasium
Sheet: P5.02

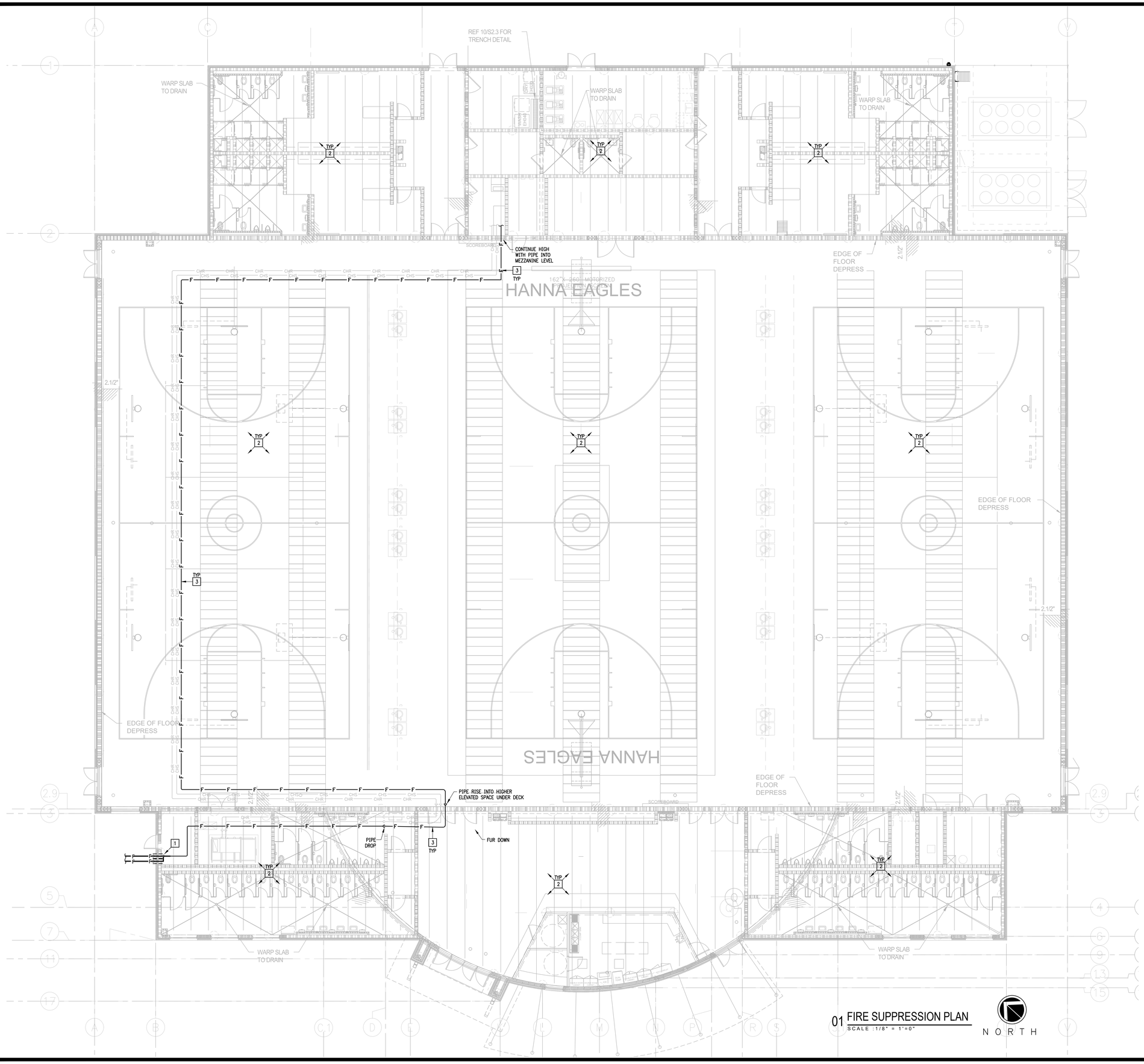

01 FIRE SUPPRESSION PLAN
SCALE : 1/8" = 1'=0"

NORTH

GENERAL NOTES:

1. PRIOR TO SUBMITTING BID, COORDINATE SCOPE OF WORK WITH LOCAL A.H.J., CITY OF BROWNSVILLE FIRE AND BUILDING PERMIT DEPARTMENTS, SUBMIT FIRE SUPPRESSION SHOP DRAWINGS TO A.H.J. FOR APPROVAL.
2. DIV. 21 SPECIFICATION OUTLINES THE PERFORMANCE REQUIREMENTS FOR THE FIRE SUPPRESSION WORK. EXISTING FIRE SUPPRESSION SYSTEM SHALL BE REUSED TO EXTENT POSSIBLE.
3. VERIFY FLOW AND PRESSURE TEST DATA WITH CIVIL ENGINEER.
4. CONTRACTOR IS RESPONSIBLE FOR SIZING THE FIRE RISER TO ACCOMMODATE THIS NEW INSTALLATION.
5. FIRE DEPARTMENT CONNECTION SHALL BE UPGRADED TO A 5 INCH STORZ CONNECTION WITH 30 DEGREE ELBOW. PROVIDE 5 INCH STORZ KNOX CAP.
6. FIRE ALARM SYSTEM SHALL BE COMPLETED AS ONE COMPLETE SYSTEM FOR THE ENTIRE BUILDING.

KEYED NOTES:

1. APPROXIMATE LOCATION OF EXISTING FIRE SPRINKLER RISER.
2. PROVIDE FIRE SPRINKLER PIPING AND SPRINKLER HEAD LOCATIONS TO ACCOMMODATE CEILING HEIGHTS. (TYPICAL)
3. ROUTE MAIN FIRE SPRINKLER PIPE TO FOLLOW PATH OF CHILLED WATER PIPING.

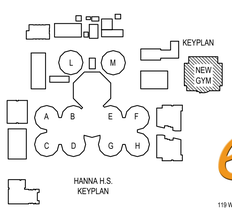

ethos engineering
119 W. VAN BUREN AVE. STE.101
HARLINGEN, TX.
PHONE: 956-230-3435
TEXAS REGISTERED ENGINEERING FIRM F-15996

No.	REVISIONS	BY

GMS ARCHITECTS
1150 Paredes Line Rd.
Brownsville TX 78526
(956) 546-0110
fax (956) 546-0196

BISD Hanna ECHS Gymnasium Facility

CESAR A. GONZALEZ
108611
06.12.2019

© Copyright 2019
Gomez Mendez Saenz Inc.
Architects-Planners
Interior Designers

Date: June 12, 2019
Scale: As Noted
Project Architect: David Monreal, AIA
Drawn By: ETHOS
Job No.: BISD Hanna Gymnasium
Sheet: FS2.01