THE WARREN GROUP
ARCHITECTS INC.

1801 South 2nd Street, Ste. 330 McAllen, TX 78503

Addendum No. 5

DATE: Tuesday, March 12, 2019

PROJECT: Edinburg Consolidated Independent School District
Freddy Gonzalez Elementary Gymnasium Improvements

PROJECT NO: 1611801

LOCATION: McAllen, Texas

FROM: Laura N. Warren, The Warren Group Architects, Inc.

The following revisions and clarifications shall be considered part of the record contract documents dated February 15, 2019 for the above referenced project and included in the contract amount. All general notes and specifications shall apply to this addendum. Where provisions of the following supplementary data differ from those of the original Contract Documents, this Addendum shall govern and take precedence.

As requested by Owner, the following scope adjustments have been made. Please adjust bids with the following noted changes:

Item No. 1: *Refer to Project Manual dated 02/15/2019.* ***See attached*** **Section 28 31 00 19 – Fire Alarm and Smoke Detection System. Insert these sheets.**

Item No. 2: *Refer to Construction Documents sheet EP2.11 dated 02/15/2019.* ***Refer attached revised sheet EP2.11 dated 03/12/2019.***

ISSUED BY:

Laura N. Warren, AIA/Principal
The Warren Group Architects, Inc.

REGISTERED ARCHITECT
LAURA N. WARREN
18378
STATE OF TEXAS

Attachments: None
PDF Format – 8.5"x11" DBR ADD5 dated 03/12/2019
PDF Format – 8.5"x11" DBR Section 28 31 00 19 dated 03/11/2019
PDF Format – 30"x42" EP2.11 dated 03/11/2019

Distribution:

Robert Estrada, District Architect
Jacqueline W. Kingan, ECISD Senior Buyer
Bidding Vendors
File

7800 Shoal Creek Boulevard
Suite 100-W
Austin, TX 78757
v 512.637.4393

Addendum

DATE
March 12, 2019

ADDENDUM NO.
5

PROJECT 188013| CISD - Freddy Gonzalez Gym

The work described herein shall be added to the scope of work defined by the contract documents or it shall modify the scope of work defined by the contract documents as described. This work shall become a part of the contract documents by addendum.

SPECIFICATIONS

Item 01 **Specification Section 28 31 00 – Fire Alarm**

A. Add specification in its entirety

DRAWINGS

Item 02 **Sheet EP2.11 – Power Plan**

A. Add fire alarm devices/system to plan

END OF ADDENDUM

SECTION 28 31 00 19 - FIRE ALARM AND SMOKE DETCTION SYSTEM

(SMALL ANALOG SYSTEM)

PART 1 - GENERAL

1.1 SCOPE

A. The contractor shall design, furnish and install a complete microprocessor based 24VDC, electrically supervised, analog intelligent fire alarm system as specified herein and provide drawings. The system shall include, but not be limited to, all control equipment, power supplies, signal initiating and signaling devices, conduit, wire, fittings, and all other accessories required to provide a complete and operable system.

B. The system shall operate as a non-coded, continuous sounding system, which will sound alarm devices until manually silenced, as herein specified.

C. The system shall be wired as a style B and style 4 supervised system for all circuits.

1.2 CODES AND STANDARDS

A. The system shall comply with the applicable Codes and Standards as follows:

1. National Electrical Code - Article 760.
2. National Fire Protection Association Standards: NFPA 70 NEC

   a. NFPA 72 National Fire Alarm Code (current State adopted version) NFPA 90A Air Conditioning

3. Local & State Building Codes
4. Requirements of Local Authorities having Jurisdiction. If local authorities design requirements differ substantially from contract drawings, the design engineer shall be notified no less than 10 days prior to bid date, to allow time for addendum to be provided to all contractors. Contractor to provide additional devices as required by local authorities in bid pricing.
5. Underwriters Laboratory Requirements and Listings for use in Fire Protective

B. Signaling Systems as follows:

1. UL 864 Control Panels 9th Edition UL 268 Smoke Detectors - Systems UL 268A Duct Smoke Detectors
2. UL 521 Heat Detectors
3. UL 228 Door Holder-Closers
4. UL 464 Audible Signaling Appliances
5. UL 1971 Visual Signaling Appliances
6. UL 38 Manual Alarm Stations

1.3 ACCEPTABLE MANUFACTURERS

A. To establish the type, quality, and features of system required, the equipment specified is that of the Notifier Fire Systems.

B. All equipment, materials, accessories, devices, etc. covered by the specifications and/or

noted on the contract drawings shall be new and unused and be U.L. listed for their intended use.

C. All references to manufacturer or supplier's model numbers and other pertinent information herein is intended to establish a minimum standard of quality, performance and features required. All equipment proposed as an EQUAL to that specified shall COMPLETELY conform to the specifications herein.

D. Equipment of other manufacturer's or supplier's may be considered as an equal to that specified provided that completely marked and identified catalog sheets of all proposed equipment is provided to the architect/ engineer for review ten (10) days prior to the date of bid for evaluation. In addition, a list of the contractor's qualifications and any exceptions to the specifications must be provided for review. Approval for any such substitution of equipment must be obtained in writing from the architect/engineer five (5) days prior to bid.

E. Provide one of the following manufacturers:

1. Notifier Fire Systems
2. Siemens
3. Edwards System Technology (EST)

1.4 GENERAL REQUIREMENTS

A. Contractor Qualifications:

1. The equipment supplier shall be an authorized and designated representative of the Fire Alarm Manufacturer to sell, install, and service the proposed manufacturer’s equipment.
2. The equipment supplier and installing contractor shall be licensed by the State

   a. Fire Marshall to sell, install, and service fire alarm systems as required by Article 5.43-2 of the Texas Insurance Code.

3. The installing contractor and/or equipment supplier shall have on his staff a minimum of three (3) installation superintendents who are licensed by the State Fire Marshall’s office for such purpose and under whose supervision installation, final connections, and check out will take place as required by the Texas Insurance Code.
4. The installing contractor or equipment supplier shall have on staff a minimum of one (1) certified NICET Level III state licensed fire alarm planner under whose supervision system design shall take place.
5. The installing contractor shall provide 24 hour, 365 days per year emergency service with qualified and state licensed service technicians.
6. The installing contractor shall have been actively engaged in the business of selling, installing, and servicing fire alarm systems for at least ten (10) years.

1.5 SUBMITTALS

A. The installing contractor and/or equipment manufacturer shall provide complete and detailed shop drawings and include:

1. Control panel configuration including wiring and interconnection schematics.
2. Complete point to point wiring diagram showing terminal connections to all system

devices.

3. Riser wiring diagram and associated zoning/addressing configurations with associated conduit sizes.
4. Complete floor plan drawings locating all devices associated with the fire alarm system. Floor plan drawings shall include conduit and wiring routing complete with conduit sizing and number of conductors by type.
5. Factory data sheets on each piece of equipment to be used and so marked as to model, dimensions, size, voltage, and configuration.
6. Detailed system description in this specification format describing system functions and operation. All specification variations and deviations shall be clearly noted and marked.
7. Complete Bill of Material for reference.
8. Programming matrix defining all input/output functions and zoning.
9. Power supply and battery calculations.
10. A letter from the manufacturer stating that the fire alarm system contractor is authorized to sell, service and install the submitted equipment.

B. Submittal shall include documentation confirming all qualifications in 1.04-A have been met. Submittals without qualification documentation shall be rejected.

C. All submittal data will be in bound form with contractor's name, supplier's name, project name, and state fire alarm license number adequately identified.

D. Only basic equipment devices have been shown on the contract drawings. Specific wiring between equipment/devices has not been shown. It is the contractor's responsibility to submit for approval the COMPLETE ENGINEERED system configuration and layout showing all devices, wiring, conduit, and locations along with other required information as specified herein.

1.6 COORDINATION

A. It shall be the responsibility of the installing contractor to coordinate all requirements surrounding installation of the fire alarm system with all trades including, but, not exclusive of: electrical contractor, sprinkler contractor, and HVAC/controls contractor and intercom system. Adequate coordination shall be provided to insure proper installation and interface to all peripheral items required to interact with the fire alarm and communication system to provide a complete and functional life safety system.

PART 2 - PRODUCTS

2.1 SYSTEM FUNCTIONAL OPERATION

A. Alarm Detection

1. When a fire alarm condition is detected by any of the system alarm initiating devices, the following functions shall occur:

a. The system common alarm LED on the CPU Module shall flash. The internal audible trouble device shall sound. Acknowledgement or silencing the alarm condition shall silence the alarm signals and cause flashing alarm LED's to illuminate steady.
b. An 80 character back-lit LCD display shall indicate all applicable information associated with the alarm condition including: zone, device type, divide

location, and time of alarm. Location and zoning messages shall be custom field programmed to respective premises.

c. Any remote or local annunciator LED's associated with the alarm zone shall be illuminated as herein specified.
d. A three-channel digital alarm communicator shall be integrally provided and transmit trouble and alarm signals to an approved remote station (remote station connection and service provided by Owner).
e. All automatic events programmed to the alarm point shall be executed and the associated indicating devices and/or outputs activated.
f. Activate all audible and visual alarm notification devices.
g. De-activate HVAC systems over 2,000 CFM.
h. Display system status changes on the remote annunciators.
i. Release all smoke doors, fire doors, fire coiling doors, fire smoke dampers and fire shutters.

B. System Trouble Detection

1. When a trouble condition is detected by the CPU, one of the system initiating, alarm or SLC circuits, the following functions shall immediately occur:

a. The system trouble LED on the CPU module shall flash and the internal audible trouble device shall sound. Acknowledgement of the trouble condition shall silence the audible trouble device and cause all trouble LED's to illuminate steady.
b. The 80-character alphanumeric LCD annunciator shall display all applicable information via the alphanumeric display associated with the respective trouble condition and its location.

C. Auxiliary Control

1. All designated "non-silenceable" auxiliary control functions shall remain in operation (even upon silencing of audible alarms) until such time as the control panel is cleared and reset manually (i.e. fan control outputs, central station interface, elevator recall interface, etc.).
2. Activation of duct smoke detectors associated fans shall shutdown their respective units immediately in addition to identifying the condition as herein specified. Duct detectors shall be programmed as a supervisory condition per NFPA 72.

D. System Supervisory Detection

1. When a supervisory condition is detected by the fire alarm control panel, the following functions shall occur:

a. The fire alarm control panel supervisory indicator shall flash and the internal audible device shall sound. Acknowledgment of the supervisory condition shall silence the audible device and cause the supervisory indicator to illuminate steady.
b. The 80-character liquid crystal display shall display all applicable
c. information associated with the respective supervisory condition.
d. Activate a supervisory contact closure to interface with the owner provided central station monitoring service.
e. Print the status change messages on the system printer.
f. Display the system status change on the remote annunciators.

E. Fire Drill Control

1. Provide a fire drill switch located on the Fire Alarm Control Panel. When activated, this switch will activate all horn/strobes and speakers for a fire drill. It shall not release fire shutter, shut down air handling equipment or recall elevators. If a fire alarm condition is detected, the system shall operate as defined in part 2.01A of this section.

2.2 ZONING

A. The system shall have the inherent capability to employ "Intelligent' smoke detectors and addressable interface devices capable of being recognized and annunciated at the main control panel on an individual basis. All zoning/device location information shall be totally field programmable to exact job requirements as approved by the Architect/Engineer.

2.3 FIRE ALARM CONTROL PANEL

A. The FACP shall be a NOTIFIER Model NFW-100X or approved equal and shall contain a microprocessor based Central Processing Unit (CPU) and power supply in an economical space saving single board design. The CPU shall communicate with and control the following types of equipment used to make up the system: intelligent addressable smoke and thermal (heat) detectors, addressable modules, printer, annunciators, digital dialer and other system controlled devices. Ethernet communications shall be via a IPOTs card. Panel shall be capable or supporting 198 fire alarm devices (99 detectors and 99 modules).

B. Central Processing Unit Module (CPU)

1. The CPU shall contain and execute all custom time control functions or control-by-event programs for specified events including 'Holiday' exceptions. Time control event/programs shall be automatically overridden by priority fire alarm events. All programs shall be held in non-volatile programmable EEPROM memory, and shall be lost if both system primary and secondary power failure occurs
2. System CPU shall also provide for non-alarm points for non-fire, low priority building functions. The CPU shall provide capability of multi-stage signaling, tornado warning, positive alarm sequencing as well as remote control system operation.

C. Display

1. The DIA shall provide an 80-character backlit, supertwist Liquid Crystal Display (LCD). It shall provide Light-Emitting Diodes (LED's) for AC POWER; SYSTEM ALARM; SYSTEM TROUBLE; SUPERVISORY; CPU FAIL; and ALARM SILENCED.
2. The display shall provide power to a 21-key membrane keypad with control capability to command all system functions, status readouts, manual control action, and entry of any alphanumeric or numeric information. The keypad shall include means to enter multiple five-digit passwords to prevent unauthorized manual control programming.

D. Control Switches

1. Acknowledge/Step Switch

2. Signal Silence Switch
3. Evacuate
4. Lamp Test/Reset

E. System Outputs

1. The system shall provide the following outputs:

   a. One port for supervised remote LCD annunciators (RS-485)
   b. Four notification appliance circuits (NAC) F. Loop Interface (SLC)
   c. The CPU shall communicate and provide power to all devices on its loop over a single pair of wires. The CPU shall receive digital/ANALOG information from all "intelligent" detectors and shall process this information to determine normal, alarm, trouble, and sensitivity conditions. The analog information may be used for automatic test and determination of maintenance requirements and be U.L. listed for such use. The CPU module shall individually monitor all "intelligent" detectors for sensitivity variation initiating a trouble condition should detector sensitivity "drift" become excessive. The system control unit shall have the capability to remotely read each detector's sensitivity in % obscuration, and if need be, electronically adjust the detector sensitivity as required for existing conditions within U.L. recommended limits. In addition, the system shall incorporate a "day/night" sensitivity feature. The system shall provide capability to program each individual detector for multiple 'pre-alarm' conditions. Each 'pre-alarm' level shall be field programmable as a function of the programmed alarm level. The system shall allow designated control-by-event actions to occur as may be required prior to any sensor reaching the designated alarm point.

F. Non-Lock Walk Test

1. The system shall include a special non-lock "walk test" mode. The walk test mode shall incorporate a one-hour time-out feature to return system to normal. Test results shall be capable of being generated and displayed on LCD annunciator or printed out on system printer.

G. Automatic Detector Test

1. The system shall include a special automatic detector test feature, which permits reading and adjustment of the sensitivity of all intelligent detectors from the main control panel. In addition, the automatic test feature shall also permit the functional testing of any "intelligent" detector or addressable interface device individually from the main control panel. An automatic detector test shall occur automatically a minimum of every two-hour period or be initiated manually from the FACP as desired. Automatic detector test sequencing shall be terminated upon receipt of a true alarm condition.

H. Special System Reports

1. The system shall have the ability to generate and print, upon command, system and point status reports. Selection of 'system' read status provides the operator with global system programming information as well as providing the operator with all individual point programming data. The system shall also provide the capability to print out a detailed 'history' report from system history file upon command.

I. Field Programming

1. The system shall be 100% field programmable without the need for external computers or, PROM programmers, and shall NOT require replacement of memory IC's. All programs shall be stored in non-volatile EEPROM memory. Programming shall be accomplished only after entering an appropriate and pre-selected five-digit password security code. System programming mode shall NOT require the system to be taken off-line nor prohibit the system from performing its normal operations and routines. The system shall be capable of revising/changing programmed functions or system expansion at any time subsequent to initialization as described herein without factory modifications or factory programming. Field programming via the use of external computers may be considered provided programming can be accomplished on-site and the owner is permanently furnished with the required programming apparatus and software as part of this contract.

J. Event History

1. The main fire alarm panel shall have the resident ability to store a minimum of 1000 system events in chronological order of occurrence. Event history shall include all system alarms, troubles, operator actions, unverified alarms, circuit/point alterations, and component failures. Events shall be time and date stamped. Events shall be stored in non-volatile buffer memory. Access to history buffer shall be secured via five-digit password security code. Systems not employing event history memory storage shall be required to furnish a printer/recorder for recording system events.

K. Power Supply

1. The power supply shall provide all control panel and peripheral power needs with filtered power as well as rectified 24VDC power for external audio-visual devices. All power supplies shall be designated to meet UL and NFPA requirements for POWER-LIMITED operation on all external signaling lines, including initiating circuits and indicating circuits.
2. Input power shall be 120VAC 60Hz. The power supply shall provide internal supervised batteries and automatic charger. The power supply shall provide both positive and negative ground fault supervision, battery/charger fail condition, A.C. power fail indicators. The power supply shall also provide supervision of modular expansion power supplies as may be required.

2.4 FIELD DEVICES

A. Multi sensor Detector (Smoke and Heat)

1. Provide Notifier FAPT-851 intelligent multi sensor smoke detectors. The multi sensor analog detector shall use a light scattering type photoelectric smoke sensor, a unipolar ionization smoke sensor and an ambient temperature sensor to sense changes in air samples from its surroundings. The integral microprocessor shall employ time based algorithms to dynamically examine data. The Multi sensor shall be capable of adapting to ambient environmental conditions. The temperature sensor shall self-adjust to the ambient temperature of the surrounding air and input an alarm when there is a change of 65° F in ambient temperature. Systems using central intelligence for alarm decisions shall not be acceptable. The detector shall continually monitor any changes in sensitivity due

to the environmental effects of dirt, smoke, temperature, age and humidity. The information shall be stored in the integral processor and transferred to the analog loop controller for retrieval using a laptop PC. Separately mounted photoelectric detectors, ionization detectors and heat detectors in the same location are not acceptable alternatives.

2. The Multi sensor smoke detector shall be rated for ceiling installation at minimum of 30 ft. (9.1m) centers and suitable for wall mount applications. The Multi sensor shall be suitable for direct insertion into air ducts up to 3 ft. (0.91m) high and 3 ft. (0.91m) wide and air velocities up to 500 ft./min. (0-2.54m/sec) without requiring specific duct detector housings or supply tubes. The percent smoke obscuration per foot alarm set point shall be field selectable to any of five sensitivity settings ranging from 1.0% to 3.5%. The integral heat sensor shall cause an alarm when it senses a change in ambient temperature of 65° F or reaches it fixed temperature alarm set point of 135° F nominal. The Multi sensor detector shall be suitable for operation in the following environment:

   a. Temperature: 32° F to 100° F (0° C to 38° C)
   b. Humidity 0-93% RH, non-condensing c. Elevation: Up to 6,000 ft. (1828m)

B. Intelligent Duct Detector

1. Notifier model DNR series duct mounted “intelligent” photoelectric smoke detectors shall be provided per applicable codes. Detectors shall operate on the same principles and exhibit the same basic characteristics as area type “intelligent” smoke sensors. The unit shall be capable of interchanging/accepting either photo-electronic or ionization type sensors. The detector shall operate in air velocities of 300 FPM to 4,000 FPM. Each detector shall interface directly to the system SLC loop without the use of zone modules.
2. The unit shall consist of a clear noryl molded plastic enclosure with integral conduit knockouts. The unit shall be provided with clear faceplate cover to provide visual viewing of detector/sensor for monitoring sensor operation and chamber condition. The duct housing shall be provided with gasket seals to insure proper seating of the housing to the associated ductwork. Each unit’s sampling tubes shall extend the width of the duct and be provided with porosity filters to reduce sensor/chamber contamination. Detectors shall be installed per NFPA 90A, and be listed with the fire alarm control panel. A remote LED shall be located on the corridor ceiling adjacent to the respective detector where detectors are not plainly viible or concealed from view.

C. Intelligent Thermal Detectors

1. Notifier Model FST-951R analog, fixed temperature and rate of rise thermal detectors shall be provided where indicated on the drawings. The detectors shall use dual electronic thermostats to measure temperature levels in the chamber and shall, on command from the control panel, send data to the panel representing the analog temperature level.
2. The detectors shall provide address-setting means on the detector heat using rotary decimal switches. No binary coding shall be required. Systems requiring separate detector programming apparatus will be unacceptable.
3. The detectors shall provide dual alarm and power/status LED's. Status LED's shall flash under normal conditions, indicating that the detector is operational and in regular communication with the control panel. Both LED's may be placed into

steady illumination by the control panel, indicating that an alarm condition has been detected. An output connection shall also be provided in the base to connect an external remote alarm LED.

4. The detector shall be semi-flush ceiling mounted and be provided with modular detector head with twist-lock base.
5. Provide weatherproof heat detectors in the Garage Areas or other non-airconditioned areas where detection is required.

D. Addressable Manual Pull Stations

1. Notifier Model NBG-12LX manual stations shall be provided where indicated on the drawings. The manual station shall provide address-setting means using rotary decimal switches. No binary coding shall be required.
2. Manual stations shall be designed for semi-flush mounting on standard electrical box. The station shall be constructed of hi-impact red molded Lexan with instructions for station operation in raised white letters. Stations shall be of the dual action type.
3. All manual pull stations shall be provided with an STI-1100 series clear plastic cover with integral horn.

E. Monitor Module

1. Notifier model FMM-101 addressable monitor modules shall be provided where required to interface to contact alarm devices. The monitor module shall be used to connect a supervised zone of conventional initiating devices to an intelligent SLC loop.
2. The monitor module shall provide address-setting means using rotary decimal switches. No binary coding shall be required.

F. Control Module

1. Notifier model FCM-1 or FRM-1 control and relay modules shall be provided where required to provide audible alarm interface and/or relay control interface. The control module shall be used to connect a supervised zone of conventional indicating devices to an intelligent loop. The zone may be wired class A or class B - field selected. The control module may be optionally wired as dry contact (form C) relay.
2. The control module shall provide address-setting means using rotary decimal switches. No binary coding shall be required. A status LED shall be provided which shall flash under normal conditions, indicating that the control module is operational and in regular communication with the control panel. The LED shall illuminate steady when the device is actuated via the fire alarm control panel.

G. Electronic Audio Visual Devices

1. Audible/Visual alarm devices shall be Notifier “L” Series electronic horn/strobe units, to be located where indicated on the drawings. Devices shall be wall or ceiling mounted as indicated on the drawings. AV devices shall be provided with the ability to provide multiple candela settings. Units shall operate at 24VDC and be polarized supervised. Each unit shall provide a choice of three difference audible tones capable of being field selected. Preferred alarm signal shall be a temporal tone producing a sound pressure level of 84 dBA. The visual device shall use Xenon strobe type producing a minimum of 15 candela on a 24 VDC limited

energy supervised circuit and meet the requirements of ADA and TAS. Strobe unit shall automatically flash upon operation of the horn. Horn/strobe unit shall be provided in textured white finish and be flush mounted. All visual devices shall be synchronized.

H. Electronic Alarm Horn

1. Provide Notifier “L” Series solid state electronic alarm device where indicated on the contract drawings. Units shall operate at 24 VDC and be polarized supervised. Each unit shall provide a choice of three different audible tones capable of being field selected. Preferred alarm signal shall be a temporal tone producing a sound pressure level of 84 dBA. Units shall be flush mounted and molded of high-impact white plastic.

I. Exterior Audio-Visual Devices

1. All audiovisual devices located outside or labeled weatherproof shall be weatherproof. Provide the following devices:

   a. SpectrAlert “L” Series for audio/visual devices.
   b. SpectrAlert “L” Series for visual devices
   c. All devices shall be provided with a weather proof type back box.

J. High Intensity Visual Signals

1. Provide a Notifier “L” Series SpectrAlert visual signal device. High intensity visual signals shall be installed where shown on the drawings and as may be required by the Americans with Disabilities Act (Public Law 101-336) and TAS.
2. High intensity visual alarms shall be Xenon strobe type producing a minimum of 15 candela on a 24 VDC limited energy supervised circuit. Alarm devices shall be designated to be wall or ceiling mounted as indicated on the drawings. Signals shall operate in unison with audible alarm appliances. All visual devices shall be synchronized. Units shall be flush mounted and shall be provided in textured white.

K. Auxiliary AHU Relays

1. Notifier/Air Products model MR-101/C relays or approved equal shall be provided for HVAC and AHU control and interface. Relays shall be heavy duty type and rated up to 10 amps at 24 VDC, 60 HZ. Relays shall be provided with NEMA I dust cover assembly and be provided with SPDT contacts as well as (fail safe) so that if the cable is broken, disconnected etc., the AHU will automatically shut down.

L. Field Charging Power Supplies

1. Provide Notifier FCPS-24 power supplies with battery backup as required. Provide 120 volts dedicated circuit to each power supply.

M. Remote LCD Alpha-Numeric Annunciators

1. Provide where indicated on the drawings, a Notifier N-ANN-80 remote LCD alpha-numeric annunciator to annunciate all system events and duplicate the displayed status at the main FACP. The annunciator shall be a backlit eighty-character LCD display and operate via the system RS485 and RS232 serial output terminal from

main FACP. The LCD display shall automatically illuminate upon receipt of an alarm or trouble condition. The luminary source shall extinguish during normal/standby model to conserve power. The unit shall operate from FACP 24VDC power and function during system power failure while the system resides on standby batteries. The remote LCD annunciator shall include:

- Integral time-date clock
- Time-date select clock
- Time-date/contrast adjust
- Display/step switch
- System reset
- System silence
- System acknowledge
- Integral trouble buzzer

2. Annunciator shall upon command display the first system alarm, last alarm, and system alarm count. The unit shall be equipped with an integral lamp test feature. The unit shall be semi flush mounted where shown.

N. Protective Covers

1. Provide protective covers on all wall mounted fire alarm devices located in student restrooms, corridors and in the cafeteria. These protective covers shall be manufactured by Safety Technology International, Inc. (STI). These covers shall be provided on all devices including but not limited to smoke detectors, heat detectors, audible and visual devices, pull stations, etc. The mounting of a device shall be reinforced to enable the protective covers to protect the fire alarm devices.

PART 3 - EXECUTION

3.1 DESIGN CRITERIA

A. The contractor shall provide drawings for Owner, Engineer and Fire Marshall's approval.

B. Drawings shall be prepared by a state licensed alarm planning superintendent.

C. Drawings shall comply with all local, state and federal code. These include but not limited to N.E.C., U.L., NFPA 101, Etc.

D. Locate the fire alarm control panel in the day room unless otherwise directed by Owner.

E. Locate a remote annunciator in the lobby unless otherwise directed by Owner.

F. Additional items required above minimum codes include the following:

1. Pull Stations – All exits including exit stair wells on multi story buildings and at the FACP.
2. Smoke Detectors – Paths of egress, electrical rooms, mechanical rooms, MDF, IDF, storage rooms, top of stairs, elevator machine room, top of elevator shaft, above each fire alarm panel and remote power supplies terminal cabinets.
3. Duct type smoke detectors – all air handling units over 2000 CFM in duct work or return air paths.
4. Heat Detectors – Shops, kitchens, coffee bars, central plants, boiler room and truck bays.
5. Flow switches – Sprinkler riser.
6. Horn - throughout the building.
7. Strobes – throughout the building.

8. Remote Power supplies: Locate in mechanical rooms, electrical rooms, MDF or other areas approved by Owner.
9. Smoke Detectors with low frequency sounder bases in all sleeping rooms.

3.2 INSTALLATION

A. Wiring:

1. All wiring shall be in accordance with NFPA 72 and the National Electrical Code, Local Codes, and article 760 of NFPA Standard 70. All wiring sizes shall conform to recommendations of the equipment manufacturer, and as indicated on the engineered shop drawings.
2. All wire shall be U.L. Listed, limited energy (300 volt) FPLP or MPP wire and shall be run open in return air ceiling plenums. The wire shall be listed to U.L. TEST 910 for such applications and is of the low smoke producing fluorocarbon type and complies with NEC Article 760 if so approved by the local authority having jurisdiction. Provide conduit in all inaccessible locations, inside concealed wall, all mechanical/electrical rooms, or other areas where wiring might be exposed and subject to damage.
3. Support wire clear of knock out panels, access panels, and maintenance spaces for equipment. Wire and cable shall be run using wire management techniques supporting cable as close as possible to within one foot of the floor or roof rafters. Wire supports shall be directly fastened to the structure on a maximum of five-foot centers. Wire routing shall be parallel and perpendicular to building lines. The wire and cable shall be secured with tie wraps or carrier wire. Sagging more than three inches will not be allowed nor will bending of the supporting ring structure.
4. All wiring for SLC signaling circuits shall be of the twisted low capacitance type to guard against outside RF and EMF interference and induced noise.
5. All wiring shall be run in a supervised fashion (i.e. no branch wiring or dog-legged wiring) per NFPA requirements such that any wiring disarrangement will initiate the appropriate trouble signals via the main control panel per NFPA and U.L. requirements.
6. Wiring splices shall be kept to a minimum with required splices to be made in designated terminal boxes or at field device junction boxes. Transposing or color code changes of wiring will not be permitted. End-of-line supervisory devices shall be installed with the last device on the respective circuit. Said device shall be appropriately marked designating it as the terminating device on the respective circuit.
7. No A.C. wiring or any other wiring shall be run in the same conduit as fire alarm wiring.

B. Conduit/Raceway

1. All wire shall be installed in an approved conduit/raceway system (except where permitted by NEC and the local authority having jurisdiction). Maximum conduit "fill" shall not exceed 40% per NEC.
2. Conduit and raceway system shall be installed as specified under the general electrical section of the specifications, and per NEC.
3. Minimum conduit size shall be 3/4" EMT. Install conduit per engineered shop drawings.

C. Minimum Wire Sizes Shall Be as Follows:

1. Signaling Line Circuit: 18 AWG
2. Notification Appliance Circuit: 14 AWG
3. Relay Control Circuits: 18 AWG

D. Sprinkler Valves

1. Contractor shall connect all tamper switches and post indicator valves to the supervisory circuit. Connect all water flow switches to the alarm circuit. Coordinate exact locations of water vaults valves and flow switches with sprinkler contractor.

3.3 NOTIFICATION APPLIANCE CIRCUITS SYNCHRONIZATION

A. All visual and audible devices shall be synchronized per the current state adopted version of NFPA 72. Provide all components required.

3.4 TEST AND REPORTS

A. A state licensed factory trained technical representative of the manufacturer shall perform the final control panel connections and supervise testing of the system and it shall be subject to the approval of the responsible engineer and owner. Upon completion of the acceptance tests, the owner and/or his representatives shall be instructed in the proper operation of the system.

B. The installing contractor shall functionally test each and every device in the entire system for proper operation and response. In addition, each circuit in the system shall be fully tested for wiring supervision to insure proper wiring installation. Any items found not properly installed or non-functioning shall be replaced or repaired and re-tested. All testing shall be supervised by a licensed fire alarm superintendent.

C. The installing contractor shall provide a complete written report on the functional test of the entire system. The test and report shall verify the function of each device in the system, operation of all auxiliary control functions, and the proper operation of the main fire alarm control panel. A copy of the test report shall be provided with maintenance manuals. The test report shall be signed and dated by the licensed fire alarm superintendent responsible for supervising the final system test and checkout.

D. The installing contractor's fire alarm superintendent shall test the entire system in the presence of the local authorities having jurisdiction.

3.5 SPARE DEVICES

A. Provide 5% spare field devices including labor to install them. Devices not used shall be given to the Owner at completion of the job.

3.6 WARRANTY

A. The fire alarm system shall be free from defects in workmanship and materials, under normal use and service, for a period of one year from the date of acceptance or beneficial occupancy, whichever shall occur first. Any equipment shown to be defective shall be repaired, replaced or adjusted during normal working hours at no cost to the owner.

3.7 GRAPHIC FLOOR PLANS

A. Provide 1/16” = 1’-0” floor plan showing all devices and zoning. Zoning shall correspond to the zone on the fire alarm control panel. The floor plans shall be framed with a glass cover and located by the fire alarm control panel. This graphic floor plan shall use the actual room numbers based on the architectural graphics package. Verify specific requirements with Owner. Provide a sample for approval.

END OF SECTION 28 31 00 19

KEYED POWER NOTES:

1. REPLACE EXISTING QUADRUPLEX RECEPTACLE WITH NEW DEDICATED RECEPTACLE AND CIRCUIT.
2. PROVIDE NEW DISCONNECT TO SERVE PACKAGE AHU. 208V/200A/NF/3P/NEMA 3R.
3. NEW SERVICE ENTRANCE DISCONNECTS AND CISD TRANSFORMERS. REFER TO RISER DIAGRAM ON E5.01.
4. PROVIDE NEMA L14-20R ON CEILING AND KEYED SWITCH MOUNTED TO ADJACENT WALL SERVING LYNRUS QR4 BASKETBALL GOAL HOIST.
5. PROVIDE CONDUIT AND PULL STRING FROM PANEL DP TO STRUCTURE ABOVE STAGE FOR FUTURE PROJECTION. CLEARLY LABEL "FOR FUTURE STAGE PROJECTION" AT PANEL DP AND STAGE.

GENERAL POWER NOTES:

A. CONTRACTOR SHALL VERIFY DEVICE LOCATIONS WITH ARCHITECT PRIOR TO ROUGH-IN. REVIEW ARCHITECTURAL CASEWORK AND MILLWORK ELEVATIONS PRIOR TO RECEPTACLE ROUGH-INS. DO NOT LOCATE RECEPTACLES BEHIND DRAWERS OR HIDDEN IN MILLWORK UNLESS SPECIFICALLY DIRECTED BY OWNER/ARCHITECT.

B. ELECTRICAL CONTRACTOR SHALL GROUP HOMERUNS WITH THREE HOTS (A,B, AND C PHASE), AND #10 NEUTRAL TO PROVIDE MULTI-WIRE BRANCH CIRCUITS. NO MORE THAN 2 MULTI-WIRE HOMERUNS PER CONDUIT.

C. ELECTRICAL CONTRACTOR SHALL PROVIDE ALL RECEPTACLES, CONDUIT, BOXES, CONDUCTORS, ETC. NECESSARY FOR THE PROPER INSTALLATION FOR ANY CITY-REQUIRED OR OWNER-SPECIFIED BUILDING LOW VOLTAGE SYSTEMS, INCLUDING: TELEPHONE, DATA, CATV, FIRE ALARM, AND CAMERA OUTLETS. COORDINATE SCOPE OF WORK AND E.C. RESPONSIBILITY WITH OWNER'S REPRESENTATIVE AND ALL OTHER RELEVANT PARTIES.

D. ELECTRICAL CONTRACTOR SHALL COORDINATE WITH MECHANICAL CONTRACTOR FOR ALL EXHAUST FAN CONTROLS. PROVIDE A FAN SWITCH IF INDICATED BY MECHANICAL. ALL EXHAUST FANS SHALL BE PROVIDED WITH BUILT-IN DISCONNECT SWITCH.

E. HVAC AND PLUMBING EQUIPMENT MAY DIFFER FROM LOCATIONS AS SHOWN ON ELECTRICAL DRAWINGS. COORDINATE EXACT LOCATIONS WITH MECHANICAL AND PLUMBING CONTRACTOR.

F. ALL RECEPTACLES MOUNTED ABOVE COUNTERS AND WITHIN 6 FEET OF SINKS OR LAVATORIES SHALL BE GFCI TYPE.

G. CONTRACTOR SHALL INDICATE CIRCUIT SERVING EACH RECEPTACLE BY PROVIDING TYPE WRITTEN LABELING LOCATED ON INSIDE FACE OF EACH RECEPTACLE COVER PLATE.

H. ELECTRICAL CONTRACTOR SHALL ROUTE ELECTRICAL CONDUIT AND WIRING TO ALL ROOF HVAC EQUIPMENT THROUGH ROOF CURBS. ELECTRICAL CONTRACTOR SHALL COORDINATE WITH MECHANICAL CONTRACTOR PRIOR TO ROUGH-IN.

I. ELECTRICAL CONTRACTOR SHALL COORDINATE WITH MECHANICAL CONTRACTOR TO FURNISH DISCONNECT SWITCH FOR ALL MECHANICAL EQUIPMENT. ELECTRICAL CONNECTIONS SHALL BE PROVIDED BY DIVISION 26.

J. ALL RECEPTACLES LOCATED IN RESTROOMS, JANITOR CLOSETS, MECHANICAL ROOMS, ELEVATOR PITS OR SHAFTS, ELEVATOR EQUIPMENT ROOMS, SERVING ELECTRIC DRINKING FOUNTAINS OR VENDING MACHINES, LOCATED WITHIN 6' OF A SINK, LOCATED ABOVE A WET COUNTERTOP OR IN A KITCHEN OR COFFEE BAR SHALL BE GFCI. EACH GFCI PROTECTED RECEPTACLE SHARING THE SAME CIRCUIT SHALL HAVE ITS OWN RE-SET AND TEST BUTTON.

K. MINIMUM CIRCUIT SIZE IS 2 #12 AND 1 #12 GROUND IN 3/4" CONDUIT. ALL CONDUCTORS SHALL BE 75 DEGREE (MINIMUM) COPPER THHN, COLOR CODED AS PER NEC AND LOCAL AMENDMENTS WITH SIZE, TEMPERATURE, AND VOLTAGE PERMANENTLY PRINTED ON THE JACKET. ALL JOINTS SHALL BE MADE UP USING SELF LOCKING, TWIST-ON, COLOR CODED, SQUARE WIRE SPRING GRAB, LONG SKIRT, WIRE CONNECTORS WITH SWEPT WINGS.

L. FIRESTOP ALL CONDUIT PENETRATIONS IN RATED WALLS. SEE ARCHITECTURAL DRAWINGS FOR WALL RATINGS. CONTRACTOR SHALL BE RESPONSIBLE FOR DAMAGE TO SHEET ROCK AND REPAIR.

FIRE ALARM GENERAL NOTES:

A. ALL CEILING MOUNTED DEVICES SHALL BE CENTERED IN THE CEILING TILE.

B. ALL FIRE ALARM VISUAL AND AUDIO/VISUAL DEVICES SHALL BE CONFIGURED TO PROVIDE CANDELA RATINGS IN ACCORDANCE WITH ADA & NFPA COVERAGES.

C. ALL VISUAL FIRE ALARM DEVICES SHALL BE 15 CD UNLESS NOTED OTHERWISE.

D. ALL WIRING FOR DEVICES IN EXPOSED STRUCTURE AREAS SHALL BE ROUTED WITHIN CONDUIT. NO WIRING SHALL BE ROUTED EXPOSED.

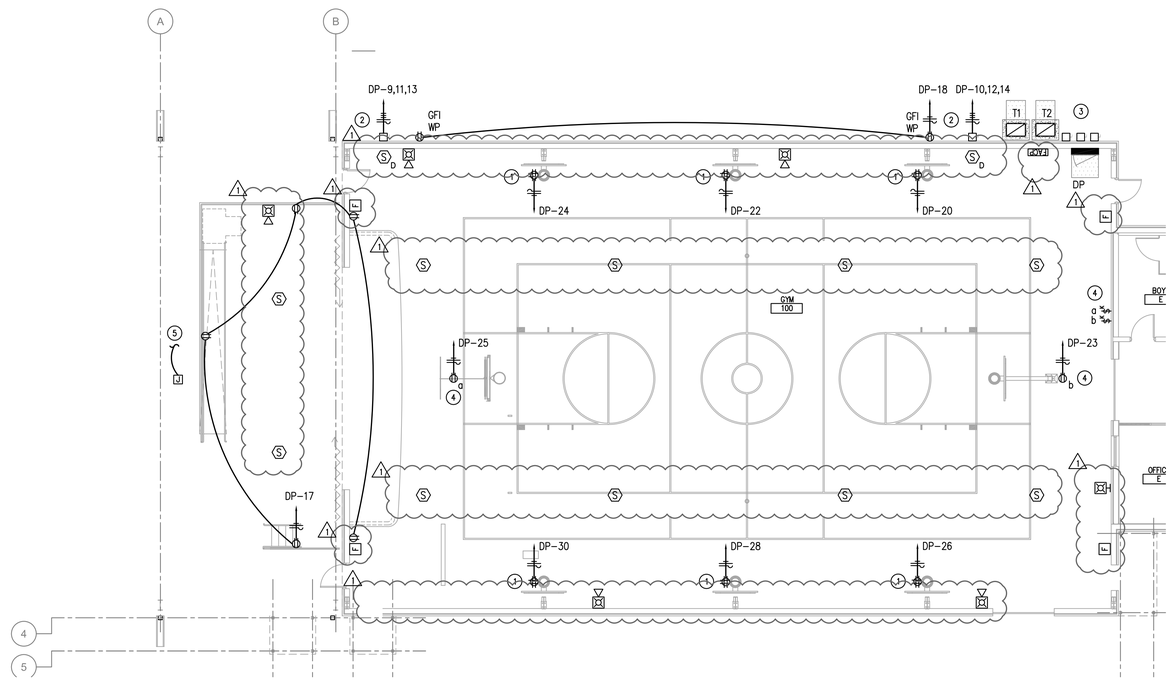

1 EP2.11 ELECTRICAL POWER PLAN
1/8"=1'-0"

TWG
THE WARREN GROUP ARCHITECTS, INC.
1801 SOUTH SECOND ST. SUITE 330
McALLEN, TX 78503
956 . 994.1900
twgarch.com

STATE OF TEXAS
THOMAS RAVENEY
12831
LICENSED
PROFESSIONAL ENGINEER
3/11/2019

REVISION	DATE	APPROVED BY	DESCRIPTION
1	03/01/2019	TR	ADDENDUM 2
2	03/11/2019	TR	ADDENDUM 3

100% CONSTRUCTION DOCUMENTS

PROPOSED

ECISD
FREDDY GONZALEZ
ELEMENTARY
GYMNASIUM
IMPROVEMENTS

2401 SUGAR RD.
EDINBURG, TEXAS 78539

DBR
200 South 10th Street Suite 901
Mc Allen, Texas 78501
956.683.1640 p 956.683.1903 f
TBPE Firm Registration No. 2234

DBR Project Number 188013.000

TS	AW	HH	JL	–

PROJECT 1611801
DATE 02/15/2019
REVISED

EP2.11

N:\18\188013.000\Drawings\OEP-188013-01.dwg Mar 11, 2019 - 5:41pm