Construction Plans For:

Starr County Memorial Hospital

MRI Addition & Renovation

128 N. FM RD. 3167

Rio Grande City, Texas

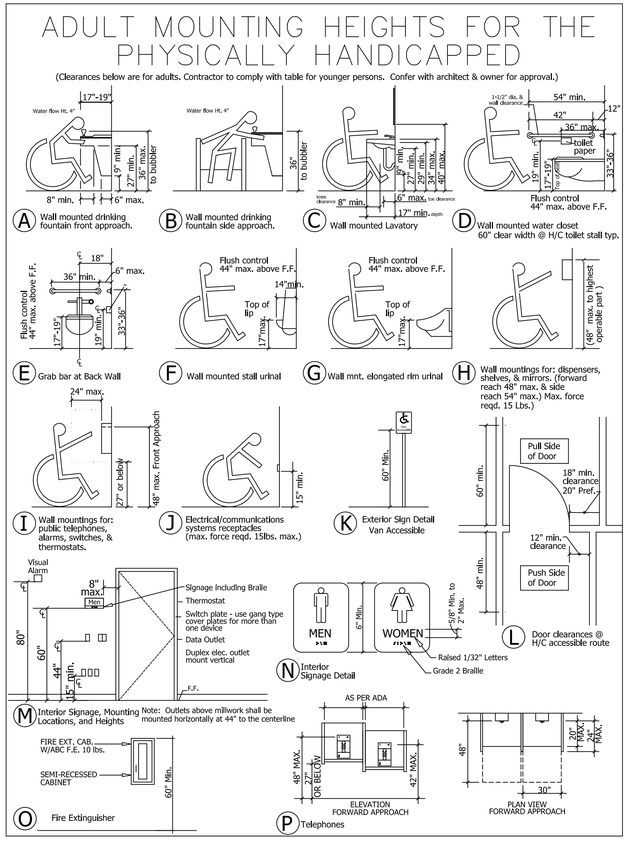

Jose Vasquez, MD	–	Chairman of Board
Mr. Joel Saenz	–	Vice Chairman of Board
Mr. Arcadio Salinas	–	Secretary / Treasurer
Dr. Adrian Guerra	–	Member
Mr. Mario A. Rodriguez	–	Member
Thalia H. Munoz	–	CEO / Administrator

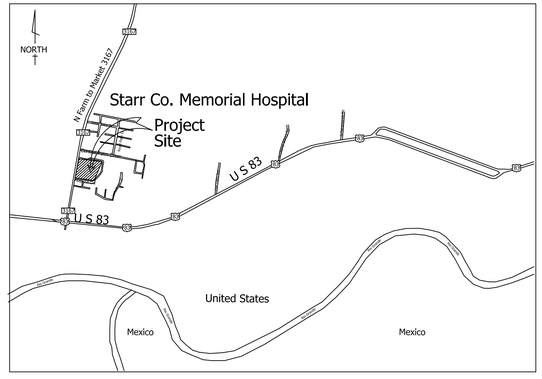

128 N. Farm to Market Road 3167
Rio Grande City, Texas Vicinity Map

Civil Engineer
Rio Delta Engineering
Gilbert Guerra, P.E.
921 South 10th Street
Edinburg, Texas 78539
956-380-5152

Architect
Design Group International
Delfino Garza Jr.
1701 Mier Street
Laredo, Texas 78043
956-724-6268

Structural Engineer
CLH Engineering
Cloromiro Hinojosa Jr. P.E.
701 S. 15th Street
McAllen, Texas 78501
956-687-5560

MEP Engineer
DBR Engineering
Edward Puentes, P.E.
200 South 10th Street
McAllen, Texas 78501
956-683-1640

Civil Drawings

1	Topographical Layout
2	Demolition Plan
3	Site Dimension Plan
4	Over - All Utility Layout
5	Site Grading Plan
6	Typical Details

Architectural Drawings

	Cover Sheet
AD-1	Demolition plan
A-1.1	Site/Key Plan
A-1.2	Roof Plan
A-2.1	Floor Plan (Areas 1 & 2)
A-2.2	Floor Plan (Areas 3 & 4)
A-3	Exterior Elevations/Sections
A-4	Interior Elevations & Schedules
A-5	Ceiling Plan (Areas 1 & 3)
A-6.1	Details
A-6.2	Details

Structural Drawings

S1.0	General Notes
S1.1	General Notes
S2.0	Foundation Plan
S3.0	Framing Plan
SD1.0	Foundation Details
SD2.0	Framing Details
SD2.1	Framing Details

MEP Drawings

M-0.0	Mechanical Symbols & Abbreviations
M-1.0	Mechanical Overall Plan
M1.1	Mechanical Demp Plan
M2.1	Mechanical Plan - Base Bid
M2.2	Mechanical Plan - Add Alternates 3 & 4
M2.3	Mechanical Plans - Add Alternates 2 & 5
M4.0	Mechanical Details
M5.0	Mechanical Schedules
M6.1	Sequence of Operations VAV AHU
M6.2	Sequence of Operations AHU
E-0	Electrical Symbols & Abbreviations
EL-1	Electrical Lighting Demolition Plan
EP-1	Electrical Overall Plan
EL-2	Lighting Plan
EP-2	Electrical Power Plan- Renovation Area 1
EP-2.1	Electrical Power Plan - MRI
E-3	Electrical Details
E-4	Electrical Schedules
E-5	Electrical Details

MEP Drawings

P-0	Plumbing Symbols & Abbreviations
P-1	Plumbing Demo Plan
P-2	Plumbing Plan
P-4	Plumbing Schedules
P-5	Plumbing Details
P-6	Plumbing Risers



SEPTEMBER 2018

PROJECT:
Starr County Memorial Hospital
MRI Addition & Renovation
128 N. FM RD 3167 Rio Grande City, Texas

DESIGN GROUP INTERNATIONAL
DELFINO GARZA JR., • ARCHITECT • 1701 MIER STREET • LAREDO, TEXAS 78043 • (956) 724-6268

DATE: 9-14-18
Registration Expiration Date:
June 30, 2019
The Texas Board of Architectural Examiners has jurisdiction over complaints regarding the professional practices of persons registered as architects in Texas.

Texas Board of Architectural Examiners
P.O. Box 12337. Austin, Texas
zip: 78711-2337
phone: (512) 305-8900

SHEET
Cover
OF

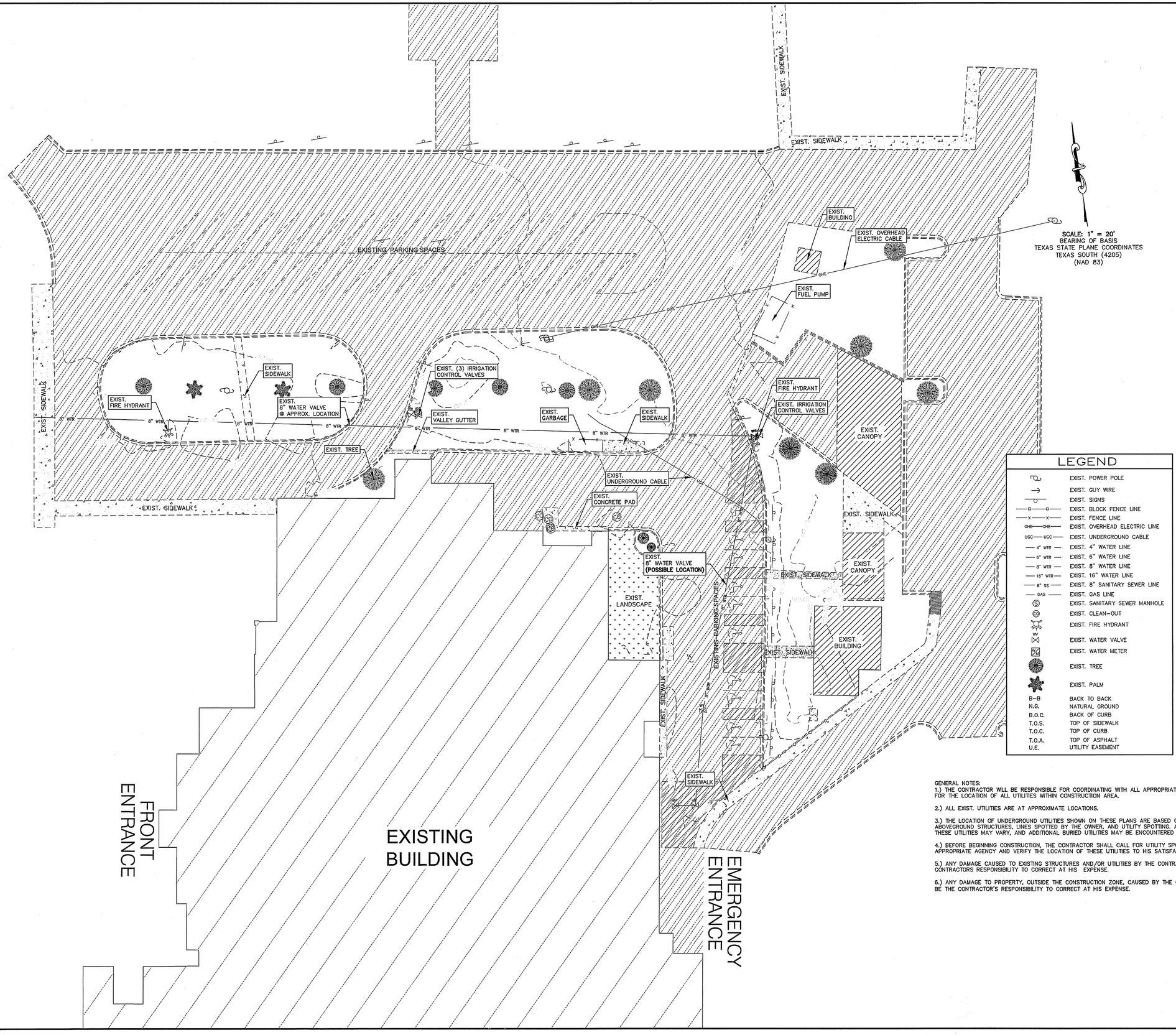

LEGEND

	EXIST. POWER POLE
	EXIST. GUY WIRE
	EXIST. SIGNS
	EXIST. BLOCK FENCE LINE
	EXIST. FENCE LINE
OHE	EXIST. OVERHEAD ELECTRIC LINE
UGC	EXIST. UNDERGROUND CABLE
4" WTR	EXIST. 4" WATER LINE
6" WTR	EXIST. 6" WATER LINE
8" WTR	EXIST. 8" WATER LINE
16" WTR	EXIST. 16" WATER LINE
8" SS	EXIST. 8" SANITARY SEWER LINE
GAS	EXIST. GAS LINE
S	EXIST. SANITARY SEWER MANHOLE
CO	EXIST. CLEAN-OUT
	EXIST. FIRE HYDRANT
WV	EXIST. WATER VALVE
WM	EXIST. WATER METER
	EXIST. TREE
	EXIST. PALM
B-B	BACK TO BACK
N.G.	NATURAL GROUND
B.O.C.	BACK OF CURB
T.O.S.	TOP OF SIDEWALK
T.O.C.	TOP OF CURB
T.O.A.	TOP OF ASPHALT
U.E.	UTILITY EASEMENT

GENERAL NOTES:

1.) THE CONTRACTOR WILL BE RESPONSIBLE FOR COORDINATING WITH ALL APPROPRIATE UTILITY COMPANIES FOR THE LOCATION OF ALL UTILITIES WITHIN CONSTRUCTION AREA.

2.) ALL EXIST. UTILITIES ARE AT APPROXIMATE LOCATIONS.

3.) THE LOCATION OF UNDERGROUND UTILITIES SHOWN ON THESE PLANS ARE BASED ON OBSERVATION OF ABOVEGROUND STRUCTURES, LINES SPOTTED BY THE OWNER, AND UTILITY SPOTTING. ACTUAL LOCATION OF THESE UTILITIES MAY VARY, AND ADDITIONAL BURIED UTILITIES MAY BE ENCOUNTERED UPON EXCAVATION.

4.) BEFORE BEGINNING CONSTRUCTION, THE CONTRACTOR SHALL CALL FOR UTILITY SPOTTING BY THE APPROPRIATE AGENCY AND VERIFY THE LOCATION OF THESE UTILITIES TO HIS SATISFACTION.

5.) ANY DAMAGE CAUSED TO EXISTING STRUCTURES AND/OR UTILITIES BY THE CONTRACTOR SHALL BE THE CONTRACTORS RESPONSIBILITY TO CORRECT AT HIS EXPENSE.

6.) ANY DAMAGE TO PROPERTY, OUTSIDE THE CONSTRUCTION ZONE, CAUSED BY THE CONTRACTOR, SHALL BE THE CONTRACTOR'S RESPONSIBILITY TO CORRECT AT HIS EXPENSE.

RIO DELTA ENGINEERING
FIRM REGISTRATION No. F-7628
SURVEY FIRM No. 10194027
921 S. 10TH AVENUE EDINBURG, TEXAS 78539
(TEL) 956-380-5152 (FAX) 956-380-5083

STATE OF TEXAS
GILBERT J. GUERRA
90156
LICENSED PROFESSIONAL ENGINEER
4/5/18

ISSUED FOR
CONSTRUCTION

PROJECT :
EXISTING TOPOGRAPHICAL LAYOUT
GRADING
STARR COUNTY MEMORIAL HOSPITAL SITE
RIO GRANDE CITY, TEXAS
STARR, COUNTY

ENGINEER:	GILBERT J. GUERRA P.E.
SURVEYOR:	IVAN GARCIA P.E. R.P.L.S.
CHECKED:	GILBERT J. GUERRA P.E.
DRAWN:	JAIME HERNANDEZ
SCALE:	1" = 20'
DATE:	MARCH, 2018
PROJECT:	ENG 18 008
REVISIONS:	REVISION#
PAGE NO.	C1

Y:\RDE ENGINEERING 2018\ENG 18.008 DG\- STARR COUNTY SITE GRADING\DWG\ENG18 008 SH-2 TOPOGRAPHICAL LAYOUT.dwg PETER 4/5/2018 8:50 AM

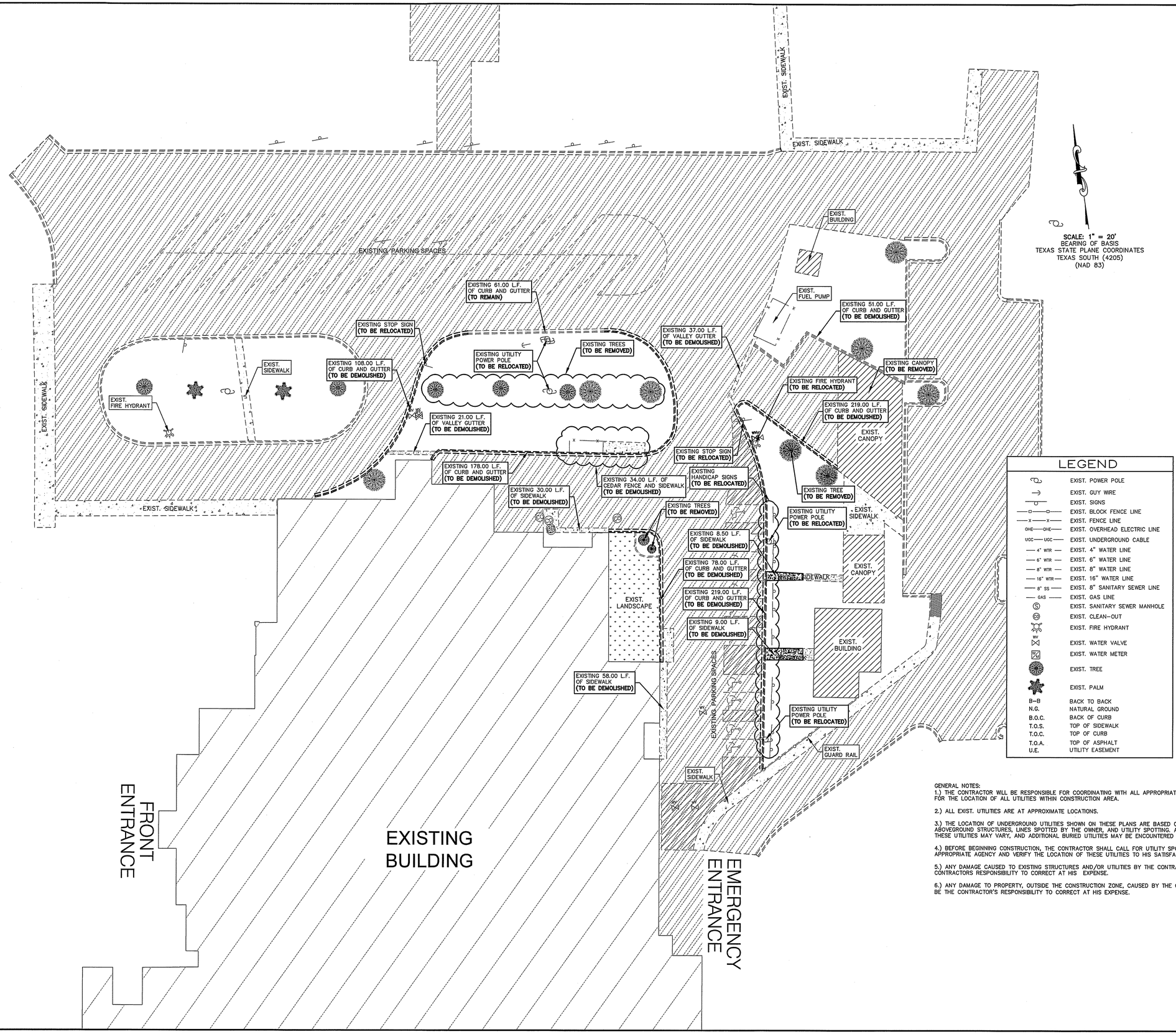

LEGEND

	EXIST. POWER POLE
	EXIST. GUY WIRE
	EXIST. SIGNS
—□—□—	EXIST. BLOCK FENCE LINE
—X—X—	EXIST. FENCE LINE
OHE—OHE	EXIST. OVERHEAD ELECTRIC LINE
UGC—UGC	EXIST. UNDERGROUND CABLE
—4" WTR—	EXIST. 4" WATER LINE
—6" WTR—	EXIST. 6" WATER LINE
—8" WTR—	EXIST. 8" WATER LINE
—16" WTR—	EXIST. 16" WATER LINE
—8" SS—	EXIST. 8" SANITARY SEWER LINE
—GAS—	EXIST. GAS LINE
Ⓢ	EXIST. SANITARY SEWER MANHOLE
CO	EXIST. CLEAN-OUT
	EXIST. FIRE HYDRANT
WV	EXIST. WATER VALVE
WM	EXIST. WATER METER
	EXIST. TREE
	EXIST. PALM
B–B	BACK TO BACK
N.G.	NATURAL GROUND
B.O.C.	BACK OF CURB
T.O.S.	TOP OF SIDEWALK
T.O.C.	TOP OF CURB
T.O.A.	TOP OF ASPHALT
U.E.	UTILITY EASEMENT

GENERAL NOTES:

1.) THE CONTRACTOR WILL BE RESPONSIBLE FOR COORDINATING WITH ALL APPROPRIATE UTILITY COMPANIES FOR THE LOCATION OF ALL UTILITIES WITHIN CONSTRUCTION AREA.

2.) ALL EXIST. UTILITIES ARE AT APPROXIMATE LOCATIONS.

3.) THE LOCATION OF UNDERGROUND UTILITIES SHOWN ON THESE PLANS ARE BASED ON OBSERVATION OF ABOVEGROUND STRUCTURES, LINES SPOTTED BY THE OWNER, AND UTILITY SPOTTING. ACTUAL LOCATION OF THESE UTILITIES MAY VARY, AND ADDITIONAL BURIED UTILITIES MAY BE ENCOUNTERED UPON EXCAVATION.

4.) BEFORE BEGINNING CONSTRUCTION, THE CONTRACTOR SHALL CALL FOR UTILITY SPOTTING BY THE APPROPRIATE AGENCY AND VERIFY THE LOCATION OF THESE UTILITIES TO HIS SATISFACTION.

5.) ANY DAMAGE CAUSED TO EXISTING STRUCTURES AND/OR UTILITIES BY THE CONTRACTOR SHALL BE THE CONTRACTORS RESPONSIBILITY TO CORRECT AT HIS EXPENSE.

6.) ANY DAMAGE TO PROPERTY, OUTSIDE THE CONSTRUCTION ZONE, CAUSED BY THE CONTRACTOR, SHALL BE THE CONTRACTOR'S RESPONSIBILITY TO CORRECT AT HIS EXPENSE.

RIO DELTA ENGINEERING
FIRM REGISTRATION No. F-7628
SURVEY FIRM No. 10194027
921 S. 10TH AVENUE EDINBURG, TEXAS 78539
(TEL) 956-380-5152 (FAX) 956-380-5083

STATE OF TEXAS
GILBERT J. GUERRA
90156
LICENSED PROFESSIONAL ENGINEER
4/5/18

ISSUED FOR:
CONSTRUCTION

PROJECT:
OVER-ALL DEMOLITION PLAN & GRADING
STARR COUNTY MEMORIAL HOSPITAL SITE GRADING
RIO GRANDE CITY, TEXAS
STARR, COUNTY

ENGINEER:	GILBERT J. GUERRA P.E.
SURVEYOR:	IVAN GARCIA P.E. R.P.L.S.
CHECKED:	GILBERT J. GUERRA P.E.
DRAWN:	JAIME HERNANDEZ
SCALE:	1" = 20'
DATE:	MARCH, 2018
PROJECT:	ENG 18 008
REVISIONS:	REVISION#
PAGE NO.	C2

Y:\RDE ENGINEERING 2018\ENG 18.008 DGI- STARR COUNTY SITE GRADING\DWG\ENG18 008 SH-3 DEMOLITION PLAN.dwg PETER 4/5/2018 8:50 AM

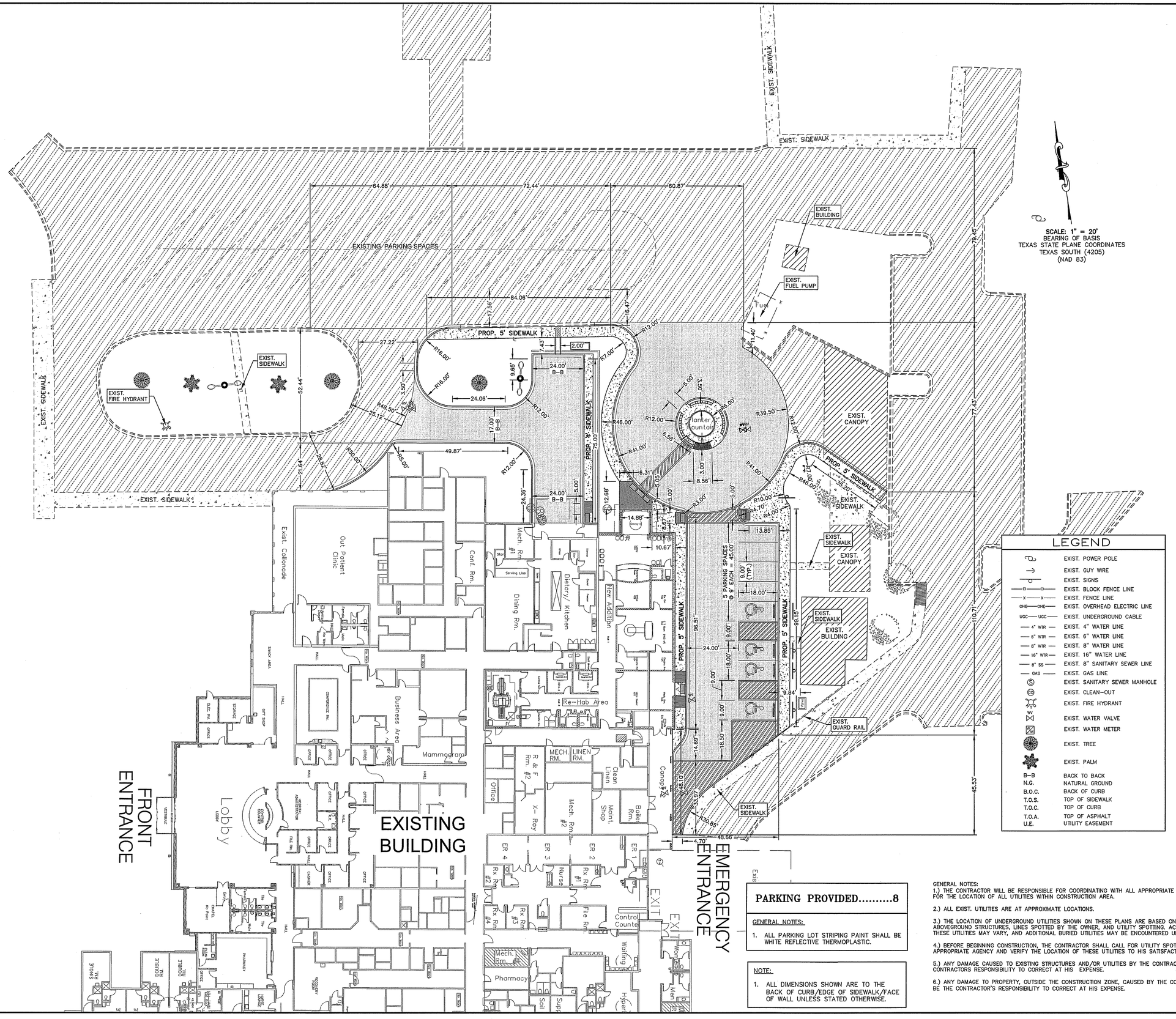

LEGEND

	EXIST. POWER POLE
	EXIST. GUY WIRE
	EXIST. SIGNS
—□—□—	EXIST. BLOCK FENCE LINE
—X—X—	EXIST. FENCE LINE
OHE—OHE	EXIST. OVERHEAD ELECTRIC LINE
UGC—UGC	EXIST. UNDERGROUND CABLE
— 4" WTR —	EXIST. 4" WATER LINE
— 6" WTR —	EXIST. 6" WATER LINE
— 8" WTR —	EXIST. 8" WATER LINE
— 16" WTR —	EXIST. 16" WATER LINE
— 8" SS —	EXIST. 8" SANITARY SEWER LINE
— GAS —	EXIST. GAS LINE
S	EXIST. SANITARY SEWER MANHOLE
CO	EXIST. CLEAN-OUT
	EXIST. FIRE HYDRANT
WV	EXIST. WATER VALVE
WM	EXIST. WATER METER
	EXIST. TREE
	EXIST. PALM
B–B	BACK TO BACK
N.G.	NATURAL GROUND
B.O.C.	BACK OF CURB
T.O.S.	TOP OF SIDEWALK
T.O.C.	TOP OF CURB
T.O.A.	TOP OF ASPHALT
U.E.	UTILITY EASEMENT

PARKING PROVIDED.....8

GENERAL NOTES:

1. ALL PARKING LOT STRIPING PAINT SHALL BE WHITE REFLECTIVE THERMOPLASTIC.

NOTE:

1. ALL DIMENSIONS SHOWN ARE TO THE BACK OF CURB/EDGE OF SIDEWALK/FACE OF WALL UNLESS STATED OTHERWISE.

GENERAL NOTES:

1.) THE CONTRACTOR WILL BE RESPONSIBLE FOR COORDINATING WITH ALL APPROPRIATE UTILITY COMPANIES FOR THE LOCATION OF ALL UTILITIES WITHIN CONSTRUCTION AREA.

2.) ALL EXIST. UTILITIES ARE AT APPROXIMATE LOCATIONS.

3.) THE LOCATION OF UNDERGROUND UTILITIES SHOWN ON THESE PLANS ARE BASED ON OBSERVATION OF ABOVEGROUND STRUCTURES, LINES SPOTTED BY THE OWNER, AND UTILITY SPOTTING. ACTUAL LOCATION OF THESE UTILITIES MAY VARY, AND ADDITIONAL BURIED UTILITIES MAY BE ENCOUNTERED UPON EXCAVATION.

4.) BEFORE BEGINNING CONSTRUCTION, THE CONTRACTOR SHALL CALL FOR UTILITY SPOTTING BY THE APPROPRIATE AGENCY AND VERIFY THE LOCATION OF THESE UTILITIES TO HIS SATISFACTION.

5.) ANY DAMAGE CAUSED TO EXISTING STRUCTURES AND/OR UTILITIES BY THE CONTRACTOR SHALL BE THE CONTRACTORS RESPONSIBILITY TO CORRECT AT HIS EXPENSE.

6.) ANY DAMAGE TO PROPERTY, OUTSIDE THE CONSTRUCTION ZONE, CAUSED BY THE CONTRACTOR, SHALL BE THE CONTRACTOR'S RESPONSIBILITY TO CORRECT AT HIS EXPENSE.

RIO DELTA ENGINEERING
FIRM REGISTRATION No. F-7628
SURVEY FIRM No. 10194027
921 S. 10TH AVENUE EDINBURG, TEXAS 78539
(TEL) 956-380-5152 (FAX) 956-380-5083

STATE OF TEXAS
GILBERT J. GUERRA
90156
LICENSED
PROFESSIONAL ENGINEER
4/5/18

ISSUED FOR:
CONSTRUCTION

PROJECT:

OVER-ALL DIMENSION PLAN

STARR COUNTY MEMORIAL HOSPITAL SITE GRADING

RIO GRANDE CITY, TEXAS

STARR, COUNTY

ENGINEER:	GILBERT J. GUERRA P.E.
SURVEYOR:	IVAN GARCIA P.E. R.P.L.S.
CHECKED:	GILBERT J. GUERRA P.E.
DRAWN:	JAIME HERNANDEZ
SCALE:	1" = 20'
DATE:	MARCH, 2018
PROJECT:	ENG 18 008
REVISIONS:	REVISION#
PAGE NO.	C3

Y:\RDE ENGINEERING 2018\ENG 18.008 DGI- STARR COUNTY SITE GRADING\DWG\ENG18 008 SH-4 DIMENSION PLAN.dwg PETER 4/5/2018 8:52 AM

LEGEND

	EXIST. POWER POLE
	EXIST. GUY WIRE
	EXIST. SIGNS
	EXIST. BLOCK FENCE LINE
	EXIST. FENCE LINE
	EXIST. OVERHEAD ELECTRIC LINE
	EXIST. UNDERGROUND CABLE
	EXIST. 4" WATER LINE
	EXIST. 6" WATER LINE
	EXIST. 8" WATER LINE
	EXIST. 16" WATER LINE
	EXIST. 8" SANITARY SEWER LINE
	EXIST. GAS LINE
	EXIST. SANITARY SEWER MANHOLE
	EXIST. CLEAN-OUT
	EXIST. FIRE HYDRANT
	EXIST. WATER VALVE
	EXIST. WATER METER
	EXIST. TREE
	EXIST. PALM
B-B	BACK TO BACK
N.G.	NATURAL GROUND
B.O.C.	BACK OF CURB
T.O.S.	TOP OF SIDEWALK
T.O.C.	TOP OF CURB
T.O.A.	TOP OF ASPHALT
U.E.	UTILITY EASEMENT

NOTES:
1.) 5 FOOT MINIMUM SEPARATION BETWEEN FIRE HYDRANTS AND WATER SERVICES.

GENERAL NOTES:
1.) THE CONTRACTOR WILL BE RESPONSIBLE FOR COORDINATING WITH ALL APPROPRIATE UTILITY COMPANIES FOR THE LOCATION OF ALL UTILITIES WITHIN CONSTRUCTION AREA.

2.) CONTRACTOR WILL BEGIN DOWN STREAM END OF PROJECT AND CONTINUE UPSTREAM WITH PIPE GROVES FACING UPSTREAM.

3.) ALL EXIST. UTILITIES ARE AT APPROXIMATE LOCATIONS.

4.) THE LOCATION OF UNDERGROUND UTILITIES SHOWN ON THESE PLANS ARE BASED ON OBSERVATION OF ABOVEGROUND STRUCTURES, LINES SPOTTED BY THE OWNER, AND UTILITY SPOTTING. ACTUAL LOCATION OF THESE UTILITIES MAY VARY, AND ADDITIONAL BURIED UTILITIES MAY BE ENCOUNTERED UPON EXCAVATION.

5.) BEFORE BEGINNING CONSTRUCTION, THE CONTRACTOR SHALL CALL FOR UTILITY SPOTTING BY THE APPROPRIATE AGENCY AND VERIFY THE LOCATION OF THESE UTILITIES TO HIS SATISFACTION.

6.) ANY DAMAGE CAUSED TO EXISTING STRUCTURES AND/OR UTILITIES BY THE CONTRACTOR SHALL BE THE CONTRACTORS RESPONSIBILITY TO CORRECT AT HIS EXPENSE.

7.) ANY DAMAGE TO PROPERTY, OUTSIDE THE CONSTRUCTION ZONE, CAUSED BY THE CONTRACTOR, SHALL BE THE CONTRACTOR'S RESPONSIBILITY TO CORRECT AT HIS EXPENSE.

RIO DELTA ENGINEERING
FIRM REGISTRATION No. F-7628
SURVEY FIRM No. 10194027
921 S. 10TH AVENUE EDINBURG, TEXAS 78539
(TEL) 956-380-5152 (FAX) 956-380-5083

STATE OF TEXAS
GILBERT J. GUERRA
90156
LICENSED PROFESSIONAL ENGINEER
4/5/18

ISSUED FOR:
CONSTRUCTION

PROJECT:
OVER-ALL UTILITY LAYOUT
GRADING
STARR COUNTY MEMORIAL HOSPITAL SITE GRADING
RIO GRANDE CITY, TEXAS
STARR, COUNTY

ENGINEER:	GILBERT J. GUERRA P.E.
SURVEYOR:	IVAN GARCIA P.E. R.P.L.S.
CHECKED:	GILBERT J. GUERRA P.E.
DRAWN:	JAIME HERNANDEZ
SCALE:	1" = 20'
DATE:	MARCH, 2018
PROJECT:	ENG 18 008
REVISIONS:	REVISION#
PAGE NO.	C4

Y:\RDE ENGINEERING 2018\ENG 18.008 DG- STARR COUNTY SITE GRADING\DWG\ENG18 008 SH-5 UTILITY PLAN.dwg PETER 4/5/2018 8:54 AM

LEGEND

~~	– FLOW ARROWS
TOS: XXXX$_x$	– PROP. TOP OF SIDEWALK
TOC: XXXX$_x$	– PROP. TOP OF CURB
TOA: XXXX$_x$	– PROP. TOP OF ASPHALT
XXXX $_x$	– PROP. FINISH FLOOR ELEVATION
G=XXXX$_x$	– PROP. TOP OF GUTTER

LEGEND

	EXIST. POWER POLE
	EXIST. GUY WIRE
	EXIST. SIGNS
	EXIST. BLOCK FENCE LINE
	EXIST. FENCE LINE
	EXIST. OVERHEAD ELECTRIC LINE
	EXIST. UNDERGROUND CABLE
	EXIST. 4" WATER LINE
	EXIST. 6" WATER LINE
	EXIST. 8" WATER LINE
	EXIST. 16" WATER LINE
	EXIST. 8" SANITARY SEWER LINE
	EXIST. GAS LINE
	EXIST. SANITARY SEWER MANHOLE
	EXIST. CLEAN-OUT
	EXIST. FIRE HYDRANT
	EXIST. WATER VALVE
	EXIST. WATER METER
	EXIST. TREE
	EXIST. PALM
B–B	BACK TO BACK
N.G.	NATURAL GROUND
B.O.C.	BACK OF CURB
T.O.S.	TOP OF SIDEWALK
T.O.C.	TOP OF CURB
T.O.A.	TOP OF ASPHALT
U.E.	UTILITY EASEMENT

NOTE:

1. ALL ELEVATIONS SHOWN ARE TO THE TOP OF CURB/TOP OF SIDEWALK UNLESS STATED OTHERWISE.
2. ALL SIDEWALKS AND ADA RAMPS SHALL BE PER CITY OF RIO GRANDE CITY STANDARDS.

GENERAL NOTES:

1.) THE CONTRACTOR WILL BE RESPONSIBLE FOR COORDINATING WITH ALL APPROPRIATE UTILITY COMPANIES FOR THE LOCATION OF ALL UTILITIES WITHIN CONSTRUCTION AREA.

2.) ALL EXIST. UTILITIES ARE AT APPROXIMATE LOCATIONS.

3.) THE LOCATION OF UNDERGROUND UTILITIES SHOWN ON THESE PLANS ARE BASED ON OBSERVATION OF ABOVEGROUND STRUCTURES, LINES SPOTTED BY THE OWNER, AND UTILITY SPOTTING. ACTUAL LOCATION OF THESE UTILITIES MAY VARY, AND ADDITIONAL BURIED UTILITIES MAY BE ENCOUNTERED UPON EXCAVATION.

4.) BEFORE BEGINNING CONSTRUCTION, THE CONTRACTOR SHALL CALL FOR UTILITY SPOTTING BY THE APPROPRIATE AGENCY AND VERIFY THE LOCATION OF THESE UTILITIES TO HIS SATISFACTION.

5.) ANY DAMAGE CAUSED TO EXISTING STRUCTURES AND/OR UTILITIES BY THE CONTRACTOR SHALL BE THE CONTRACTORS RESPONSIBILITY TO CORRECT AT HIS EXPENSE.

6.) ANY DAMAGE TO PROPERTY, OUTSIDE THE CONSTRUCTION ZONE, CAUSED BY THE CONTRACTOR, SHALL BE THE CONTRACTOR'S RESPONSIBILITY TO CORRECT AT HIS EXPENSE.

RIO DELTA ENGINEERING
FIRM REGISTRATION No. F-7628
SURVEY FIRM No. 10194027
921 S. 10TH AVENUE EDINBURG, TEXAS 78539
(TEL) 956-380-5152 (FAX) 956-380-5083

STATE OF TEXAS
GILBERT J. GUERRA
90156
LICENSED PROFESSIONAL ENGINEER
4/5/18

ISSUED FOR:
CONSTRUCTION

PROJECT:
PAVING AND DRAINAGE LAYOUT
STARR COUNTY MEMORIAL HOSPITAL SITE GRADING
RIO GRANDE CITY, TEXAS
STARR, COUNTY

ENGINEER:	GILBERT J. GUERRA P.E.
SURVEYOR:	IVAN GARCIA P.E. R.P.L.S.
CHECKED:	GILBERT J. GUERRA P.E.
DRAWN:	JAIME HERNANDEZ
SCALE:	1" = 20'
DATE:	MARCH, 2018
PROJECT:	ENG 18 008
REVISIONS:	REVISION#
PAGE NO.	C5

Y:\RDE ENGINEERING 2018\ENG 18.008 DG\— STARR COUNTY SITE GRADING\DWG\ENG18 008 SH-6 PAVING AND DRAINAGE LAYOUT.dwg PETER 4/5/2018 11:24 AM

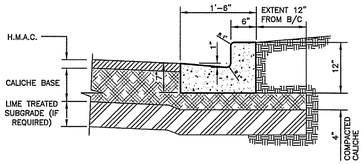

CONCRETE CURB & GUTTER
NOT TO SCALE

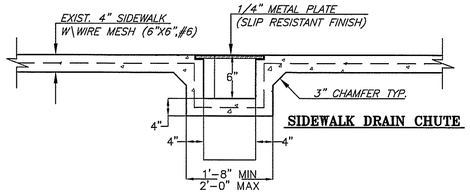

SIDEWALK DRAIN CHUTE

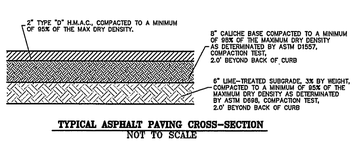

TYPICAL ASPHALT PAVING CROSS-SECTION
NOT TO SCALE

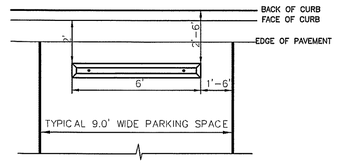

WHEEL STOP DETAIL
(NO TO SCALE)

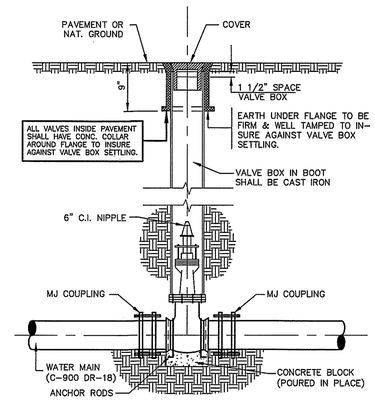

TYPICAL VALVE and VALVE BOX INSTALLATION
NOT TO SCALE

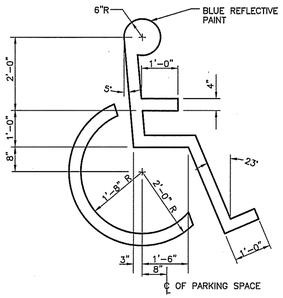

TYPICAL PAINTED HANDICAP SYMBOL
NOT TO SCALE

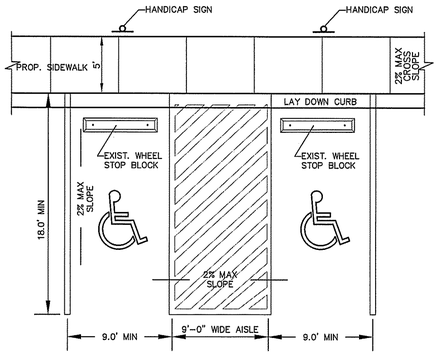

HANDICAPPED PARKING SPACE DETAIL
NOT TO SCALE

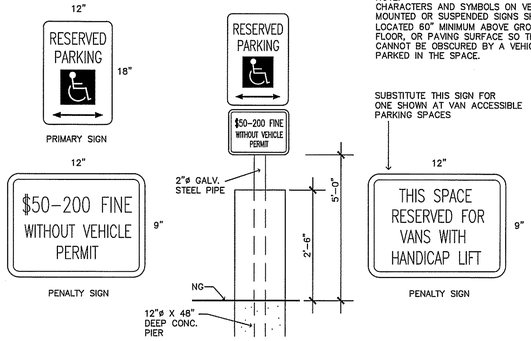

PARKING SIGNAGE: HANDICAPPED PARKING DETAIL
NOT TO SCALE

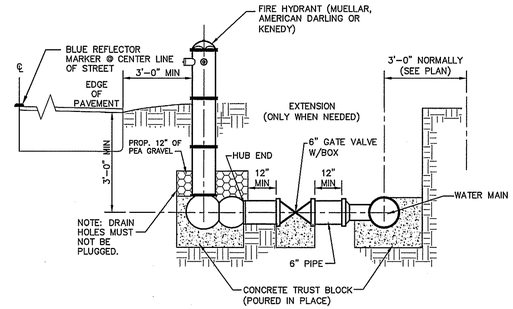

TYPICAL FIRE HYDRANT INSTALLATION
NOT TO SCALE

SIDEWALK NOTES:

1. 5" WIDE SIDEWALK. (AS STATED ON PLANS)
2. SIDEWALK GRADIENT SHALL NOT EXCEED 1:20.
3. SIDEWALK CONCRETE SHALL BE 5 SACK CEMENT MIX AND SHALL HAVE A MINIMUM COMPRESSIVE STRENGTH OF 3000 psi @28 days.
4. CONTRACTOR SHALL VERIFY EXISTENCE AND LOCATION OF EXISTING UTILITY LINES WITH APPROPRIATE COMPANIES TO AVOID PLACING SIDEWALKS ON TOP OF LINES.
5. PROVIDE DROP CURBS AT INTERSECTIONS.
6. CONTRACTOR SHALL COMPLY WITH LATEST REGULATIONS AS SET FORTH IN AMERICANS WITH DISABILITIES ACT (ADA).

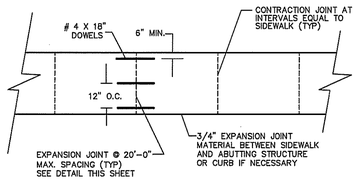

SIDEWALK PLAN

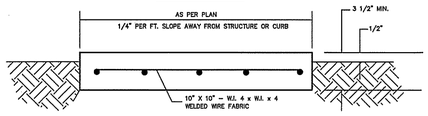

SIDEWALK SECTION

CONCRETE SIDEWALK DETAILS
NOT TO SCALE

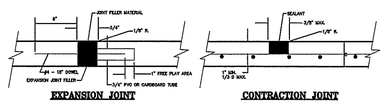

EXPANSION/CONTRACTION JOINT NOTES:

1) JOINT FILLER: TYPE C, ASTM D1752; PRE MOLDED SPONGE RUBBER. FULLY COMPRESSIBLE WITH RECOVERY RATE OF MINIMUM 85 %, OR APPROVED EQUAL.
2) SEALANT: ASTM D1190; HOT APPLIED, RUBBER; SYNTHETIC RUBBER; ASPHALT; POLYMER BASED ASPHALT; COAL TAR AND RUBBER COMPOUND, OR APPROVED EQUAL.
3) MIX CONCRETE IN ACCORDANCE WITH ACI 304. DELIVER CONCRETE IN ACCORDANCE WITH ASTM C94.

EXPANSION/CONTRACTION JOINT DETAIL
NOT TO SCALE

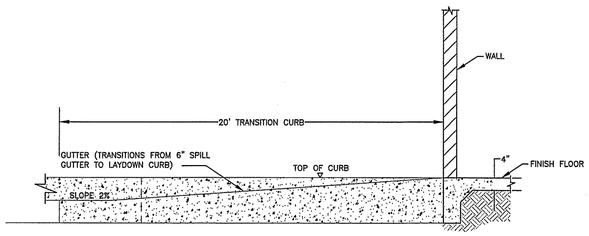

TRANSITION CURB DETAIL
NOT TO SCALE

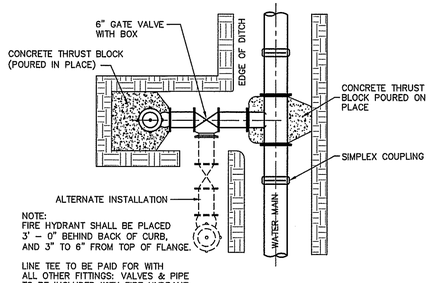

TYPICAL FIRE HYDRANT INSTALLATION
NOT TO SCALE

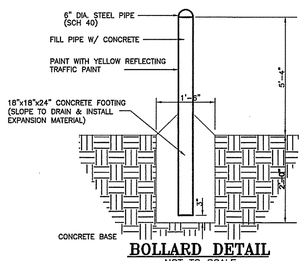

BOLLARD DETAIL
NOT TO SCALE

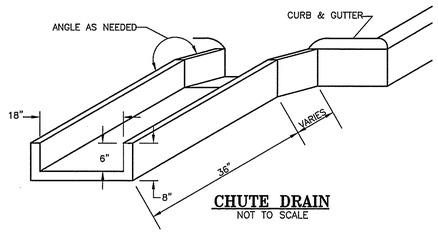

CHUTE DRAIN
NOT TO SCALE

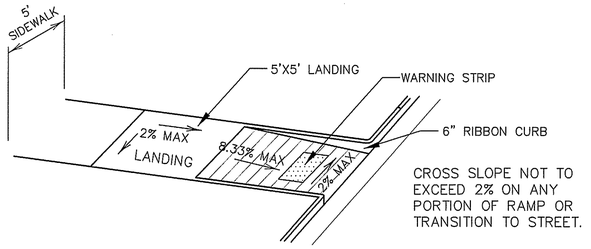

TYPICAL SIDEWALK RAMP
NOT TO SCALE

RIO DELTA ENGINEERING
FIRM REGISTRATION No. F-7628
SURVEY FIRM No. 10194027
921 S. 10TH AVENUE EDINBURG, TEXAS 78539
(TEL) 956-380-5152 (FAX) 956-380-5083

STATE OF TEXAS
GILBERT J. GUERRA
90156
LICENSED PROFESSIONAL ENGINEER
4/5/18

ISSUED FOR:
CONSTRUCTION

TYPICAL DETAILS

STARR COUNTY MEMORIAL HOSPITAL SITE GRADING
RIO GRANDE CITY, TEXAS
STARR, COUNTY

PROJECT :

ENGINEER:	GILBERT J. GUERRA P.E.
SURVEYOR:	IVAN GARCIA P.E. R.P.L.S.
CHECKED:	GILBERT J. GUERRA P.E.
DRAWN:	JAIME HERNANDEZ
SCALE:	NOT TO SCALE
DATE:	MARCH, 2018
PROJECT:	ENG 18 008
REVISIONS:	REVISION#
PAGE NO.	C6

Y:\RDE ENGINEERING 2018\ENG 18.008 DGI- STARR COUNTY SITE GRADING\DWG\ENG18 008 SH-7 TYPICAL DETAILS.dwg PETER 4/5/2018 8:54 AM

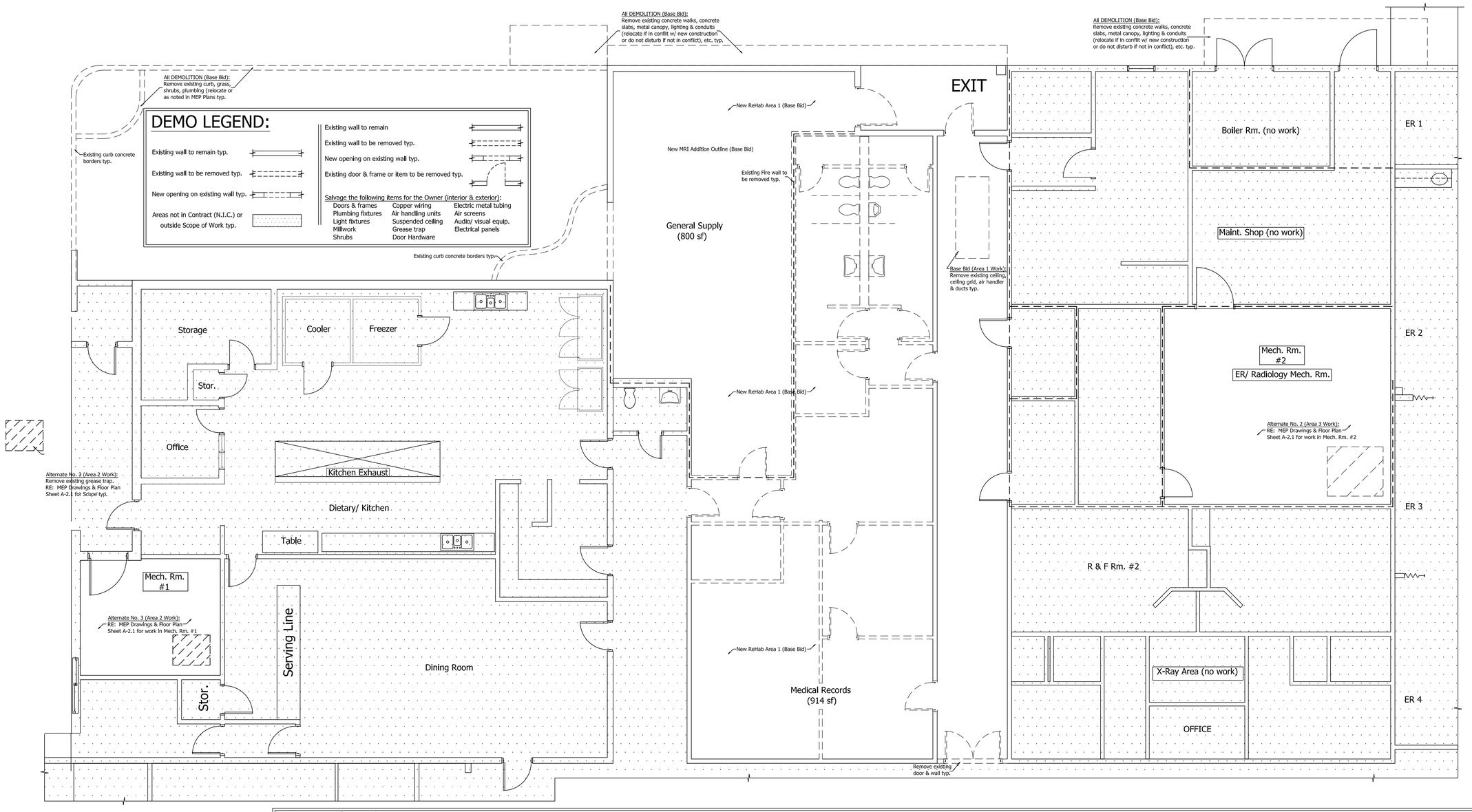

1. "Demo" Plan- Area 3 & 4

3/16" = 1'----------0"

North

Notes to Contractor:

1. All areas designated "H/C" shall comply w/ handicapped heights, reach requirements, clearances, slopes, ramps, handrails, etc. Refer to Title Sheet for additional information.
2. Please note that the General Contractor, or Subcontractors, may need to refer to all Drawings, including Schedules, for complete instructions on work items.
3. Masonry & Gyp. Bd. outside corners shall have bull-nose finishes typ.
4. Refer to Scope of Work on Sheet AD-1 for other work.

Scope of Work

Provide labor, materials, equipment, new work, & repairs as noted on this Scope, & on Plans & Specs including Civil, Mechanical Plumbing, Electrical (MEP), & Structural- Sept. 2018

1. General Notes: Instructions for the General Contractor (GC) or "Prime" Contractor & all the subcontractors. Even though "Safety", "Security", "Damages or Injuries" language/ instructions are addressed below in this "Scope of Work", let it be understood that the Contractor has full responsibility of these items (as well as anything else noted below) and how, who, when, etc., to address them.
   A. Plans & Specs: Refer to Architectural, Structural, Mechanical, Electrical, & Plumbing Plans for full Scope of Work.
   B. Safety: The project area (interior & exterior) shall be safe for the Owners staff, work force, & the general public (especially neighborhood youth on weekends & after hours) at all times. Provide barricades, fences, barriers, etc. as needed to insure a safe area inside & outside the work area.
   C. Security: Security: The Prime Contractor is responsible to secure the Project (lock all doors & gates, board up openings, fence area, etc.) at all times to guard against intruders, theft, arsons etc. before, during and after working hours.
   D. Utilities cut-offs: Coordinate all utility "cutoffs" with Owner & Utilities 2 days before needed.
   E. Adverse Conditions: If any adverse conditions are scheduled (loud noise, smell, movement of large equipment, etc.) cordon off/ secure the affected area & advise the Owner (Engineering & Building Dept.) 2 days prior. Inform them about the length of time needed for the "adverse conditions" & if the Owner wants to make their own preparations.
   F. Damages or Injuries: The Contractor (general or subcontractor) shall be responsible for any damages or injuries caused to property or persons for failure to follow instructions/ precautions as per the Building Codes, general construction practices, & in the contract documents. The General Contractors' &/or Subcontractors' failure to follow all applicable Codes (Local & National), general construction (& demolition) safety practices, failure to use properly skilled labor (including personnel, tools, & equipment), & failure to plan for methods to undertake the work (to anticipate possible worst case sinarios) shall not relieve him of responsibility of injuries or damages.

2. Demolition: RE: Architectural, MEP, & Structural Plans / Specs for items to be removed including but not limited to the following (replace damaged item w/ new):
   A. Selected flooring & base B. Selected Doors & Windows C. Selected Ceilings D. Selected walls
   E. Concrete walks/ slabs F. Selected Plumbing G. Selected a/c equipment H. Selected Electrical
   I. Items & not used or abondonded including electrical, plumbing, HVAC, structural, millwork, VCT & base, tile/ grout, doors, frames, etc.

3. Salvage & safe keep the following items for the Owner (unless instructed otherwise):
   A. Doors, frames, & hdwe. B. Metal studs/ steel members C. Millwork/ shelving D. A/C equipment E. AV equipment
   F. Electrical including breakers, wiring & conduits, panels, receptacles, switches, etc. G. Structural items
   H. Any items that are missing or damaged but required for the completion of this work

4. Repair/ replace existing items to remain: If "existing item to remain" are deteriorated, damaged, worn-out, or missing, replace item w/ new item of same size, thickness, texture, finish, spacing, etc. of existing item. Items "to remain" that will need repairing or replacing are as noted, but not limited to, items below (prepare all items/ surfaces as per manufacturers recommendations):
   A. CONCRETE FLOOR SLAB: Repair cracks, remove clumped grout, glue, paint, VCT glue, etc., fill-in slab chips/ dents, holes, etc., re-float & level slab w/ floor stone or as recommended by flooring manufacturer, & prepare slab for new floor as per Room Finish Schedule. Note that the VCT floor glue must be removed for the proper application and color rendition of the concrete stain.
   B. MASONRY WALLS (CMU):
      a. On cracks 1/8" or larger, clean-out all loose material, & fill w/ masonry grout (fill small holes & cracks w/ painters sealant), texture to match adjacent surfaces, and paint entire wall.
      b. Where existing openings are closed/ filled-in (doors, windows, etc.), remove partial or damaged CMU & provide new full CMU's w/ coursing to match existing.
      c. Provide new CMU as noted (or remove exist. if called out by Structural drawings) on plan & wherever there are exist. openings not needed (including abandoned a/c ducts, lines, equipment, electrical, plumbing, etc.).
      d. Provide new masonry foam insulation in all exterior new CMU walls typ.
   C. GYP. BD. (walls, ceilings, etc.): Prepare gyp. bd. as per manufacturers recommendations and as follows:
      a. Replace damaged studs or floor/ wall plates (broken spline/ corners, etc.) or missing metal studs w/ new studs to match existing. If an existing wall is extended, also match existing stud width/ height and spacing. The height of the studs/ wall shall be to match existing stud height or the new ceiling heights/ details, whichever is tallest.
      b. New stud walls (not extensions of existing walls) shall be 3-5/8" wide spaced at 16" on centers.
      c. Provide new type "X" (5/8" fire rated) gyp. bd. on new stud walls noted on plans, on existing stud walls to remain, and on existing gyp. bd. walls or ceilings w/ mold (all 200 numbered rooms on the East end of the facility except Bathrooms).
      d. Fill all holes, cracks, & depressions w/ textone. Re-float & sand all repairs & any area not smooth & uniform.
   e. Treat all discoloration, mold, & stains w/ Clorox, "stain kill" or as recommended by gypsum board manufacturer, & refinish (or re-texture) area to match adjacent finishes.
   f. Provide new gyp. bd. wherever existing gyp. bd. is broken, missing (tape, float, paint & match exist. thickness), or old repair repairs are not properly/ professionally finished. Remove existing repair, bevel edging of existing & new gyp. bd., install new gyp. bd. below existing surface, sand 8" past repair area, textone repair area & feather textone over exist. gyp. bd. Texture repair to match adjacent surface & feather texture into existing & to match adjacent surfaces, and repaint entire area.
   g. Tape, float, sand and texture all new gyp. bd. and repairs typ.
   D. DOORS , FRAMES, & WOOD TRIM TO REMAIN: Repair items as noted below (prep items & surfaces as per manufacturers recommendations). If existing item is deteriorated, damaged, worn-out, or missing (replace item w/ new item of same spec, size, thickness, texture, etc.):
      a. Remove all hardware (including pulls, latches, etc.) and screws, nails, staples, tape, etc. on existing doors to remain. Fill all holes (including areas w/ chipped wood veneer) w/ wood putty to match color of wood. Remove all rust from metal doors and frames, sand & prime w/ enamel paint (replace door or frames if metal has holes). Also sand entire wood / metal item (door, frame, millwork, trim, etc.) w/ fine sandpaper (including wood putty and metal). Provide 3 coats of paint (or semi-gloss urethane varnish if varnished) & re-sand wood finish between coats.
      b. Provide new door &/ or frame if existing is missing or damaged beyond repairs (cracked frame, hole in door, etc.).
   E. DOOR HARDWARE: Provide new hardware to replace existing for all doors. Re: Specs for Hardware Schedule & other notations. All hardware to comply w/ ADA & Fire Codes. Provide an aluminum ramp on any door w/ more than a 1/4" difference between finish floors at door sill.
   F. PAINT / Varnish of "items to remain":
      a. Before painting & re-finishing surfaces, repair surface as per Scope of Work note **# 4B, 4C, & 4D** above.
      b. Prepare all paintable surfaces as per paint manufacturers recommendations before painting. Clean, sand & repair all walls, wood, & trim to receive new paint (especially glossy finishes or metal doors, frames, or surfaces). Any easily scraped off new or existing paint will require the removal of the paint, re-sanding existing surface (entire wall or item), & repaint the entire affected wall or item.
      c. Existing chipped paint shall be sanded smooth (feathered) around the edges so as not to be noticed when re-painted.
      d. Paint all new and existing to remain... gyp. bd. & CMU walls/ ceilings, metal doors & frames, wood or metal trims/ items, etc.
   G. EXISTING FIRE CODE GYP. BD. (below steel trusses & fire rated walls):
      a. Provide new gyp. bd. (type "X) on 2x4 metal framing if required (16" o.c.) wherever existing is missing or damaged.
      b. Replace existing damaged gyp. bd. as per Scope of Work, note **# 4C** above.
   H. MECHANICAL, ELECTRICAL, PLUMBING (MEP) items to remain: Refer to notes below & MEP drawings & specs.
      a. Check all existing MEP systems for proper/ code compliance & operations. Repair/ replace existing damaged, missing, faulty, non-operable or non-code compliant MEP items (including but not limited to air handlers, condensers, thermostats, wiring (low/ high voltage), ducts/ insulation, registers, RAG's, fans, exhausts, motors, concrete pads, electrical panels, circuit breakers, switches, receptacles, wiring, conduits, exhausts, connections to existing electrical/ panels, leaks on water, sewer, or vent lines, etc., and all other items that need repairs or replacing in order to proceed/ complete this work.
      b. Remove/ cap all abondoned MEP items (below slab, in wall cavaty, or in attic) or wherever existing fixtures are removed or re-located.

PROJECT:
Starr County Memorial Hospital
MRI Addition and Renovation
128 N. FM Road 3167 Rio Grande City, Texas

DESIGN GROUP INTERNATIONAL
DELFINO GARZA JR., • ARCHITECT • 1701 MIER STREET • LAREDO, TEXAS 78043 • (956) 724-6268

REGISTERED ARCHITECT GARZA JR. STATE OF TEXAS

DATE: 9-14-18
Registration Expiration Date: 6-30-19

The Texas Board of Architectural Examiners has jurisdiction over complaints regarding the professional practices of persons registered as architects in Texas.

Texas Board of Architectural Examiner
P.O. Box 12337: Austin, Texas
zip: 78711-2337
phone: (512) 305-8900

SHEET AD-1
OF A-6

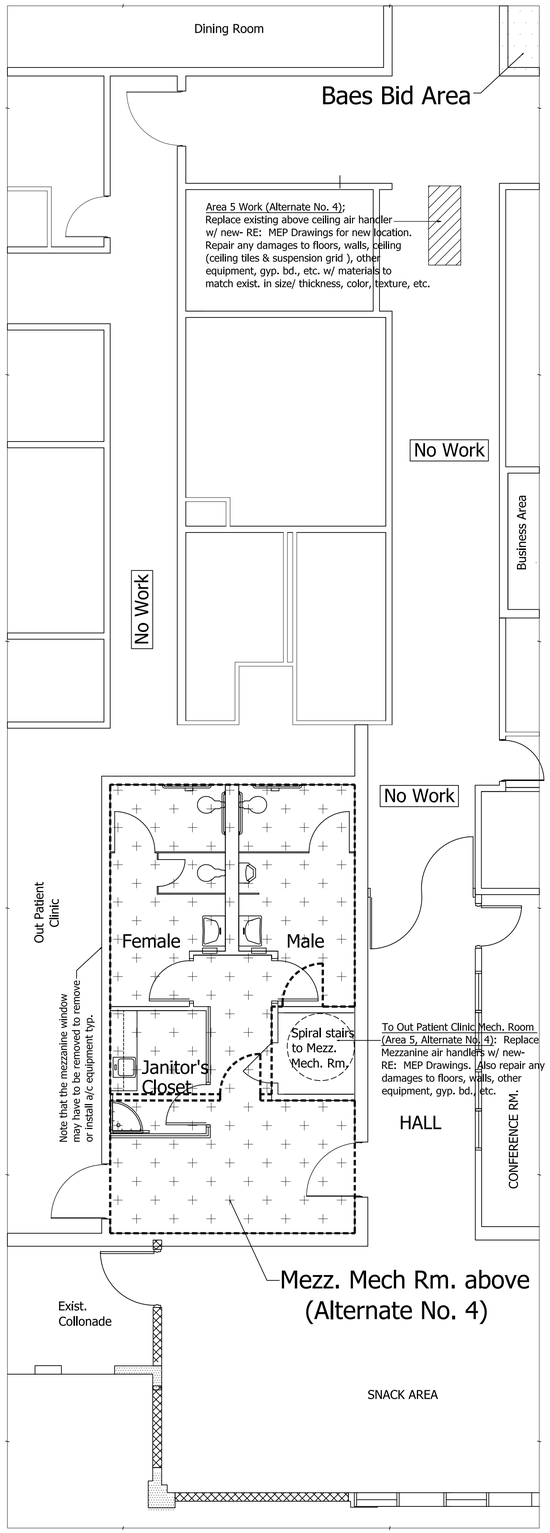

2. Area 5 Plan- Alternate No. 4

3/16"= 1'------0"

North

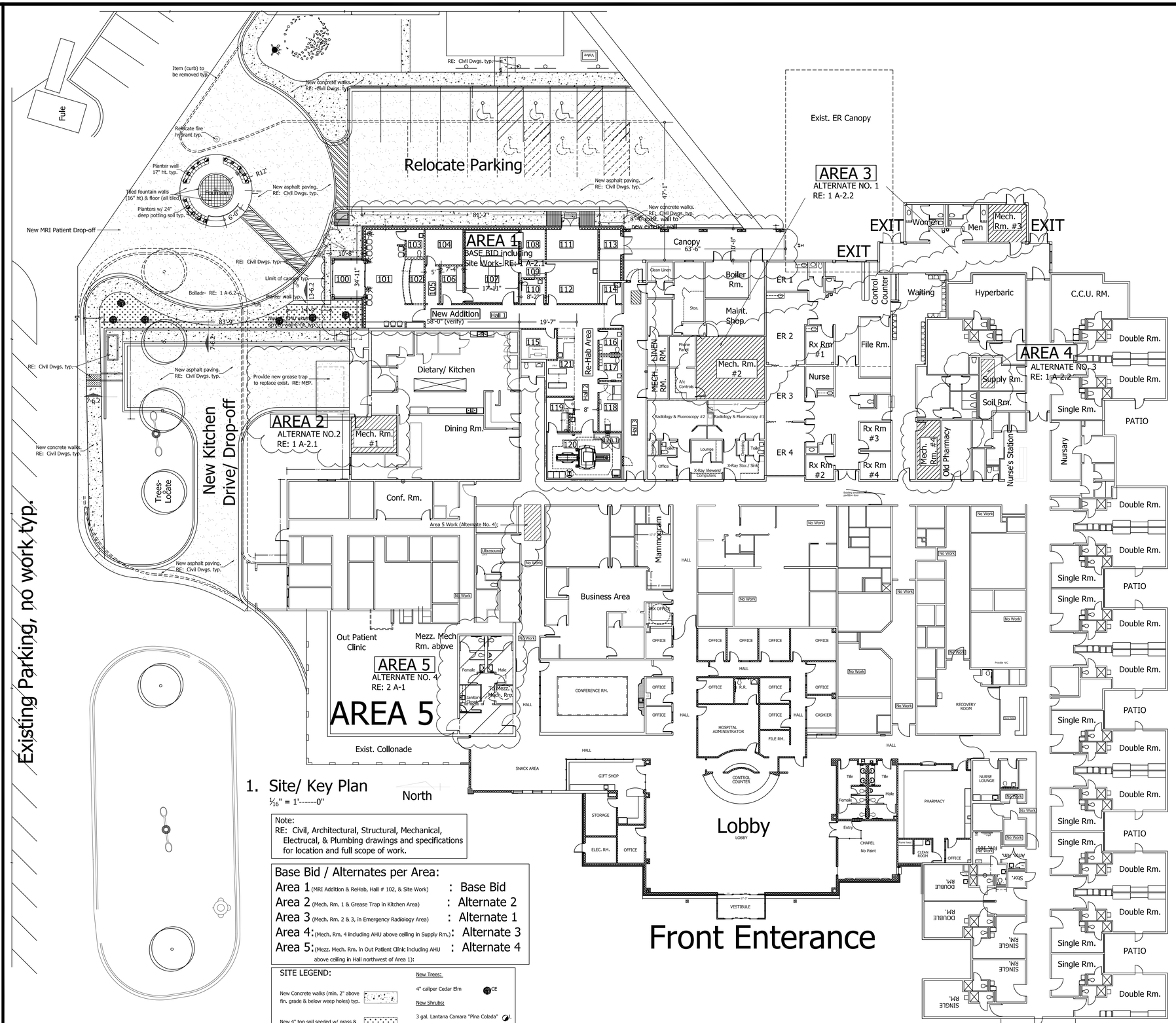

1. Site/ Key Plan

1/16" = 1'------0"

North

Note:
RE: Civil, Architectural, Structural, Mechanical, Electrucal, & Plumbing drawings and specifications for location and full scope of work.

Base Bid / Alternates per Area:

Area 1 (MRI Addition & ReHab, Hall # 102, & Site Work)	:	Base Bid
Area 2 (Mech. Rm. 1 & Grease Trap in Kitchen Area)	:	Alternate 2
Area 3 (Mech. Rm. 2 & 3, in Emergency Radiology Area)	:	Alternate 1
Area 4: (Mech. Rm. 4 including AHU above ceiling in Supply Rm.)	:	Alternate 3
Area 5: (Mezz. Mech. Rm. in Out Patient Clinic including AHU above ceiling in Hall northwest of Area 1):	:	Alternate 4

SITE LEGEND:

New Concrete walks (min. 2" above fin. grade & below weep holes) typ.

New 4" top soil seeded w/ grass & full lawn sprinkler sys.

New Bollard ⓑB

New Trees:

4" caliper Cedar Elm CE

New Shrubs:

3 gal. Lantana Camara "Pina Colada" L

3 gal. Miniature Poinciana MP

3 gal. Plumbago P

PROJECT:

Starr County Memorial Hospital

MRI Addition and Renovation

128 N. FM Road 3167 Rio Grande City, Texas

DESIGN GROUP INTERNATIONAL

DELFINO GARZA JR., • ARCHITECT • 1701 MIER STREET • LAREDO, TEXAS 78043 • (956) 724-6268

REGISTERED ARCHITECT STATE OF TEXAS

DATE: 9-14-18

Registration Expiration Date: 6-30-19

The Texas Board of Architectural Examiners has jurisdiction over complaints regarding the professional practices of persons registered as architects in Texas.

Texas Board of Architectural Examiners
P.O. Box 12337; Austin, Texas
zip: 78711-2337
phone: (512) 305-8900

SHEET A-1.1

OF A-6

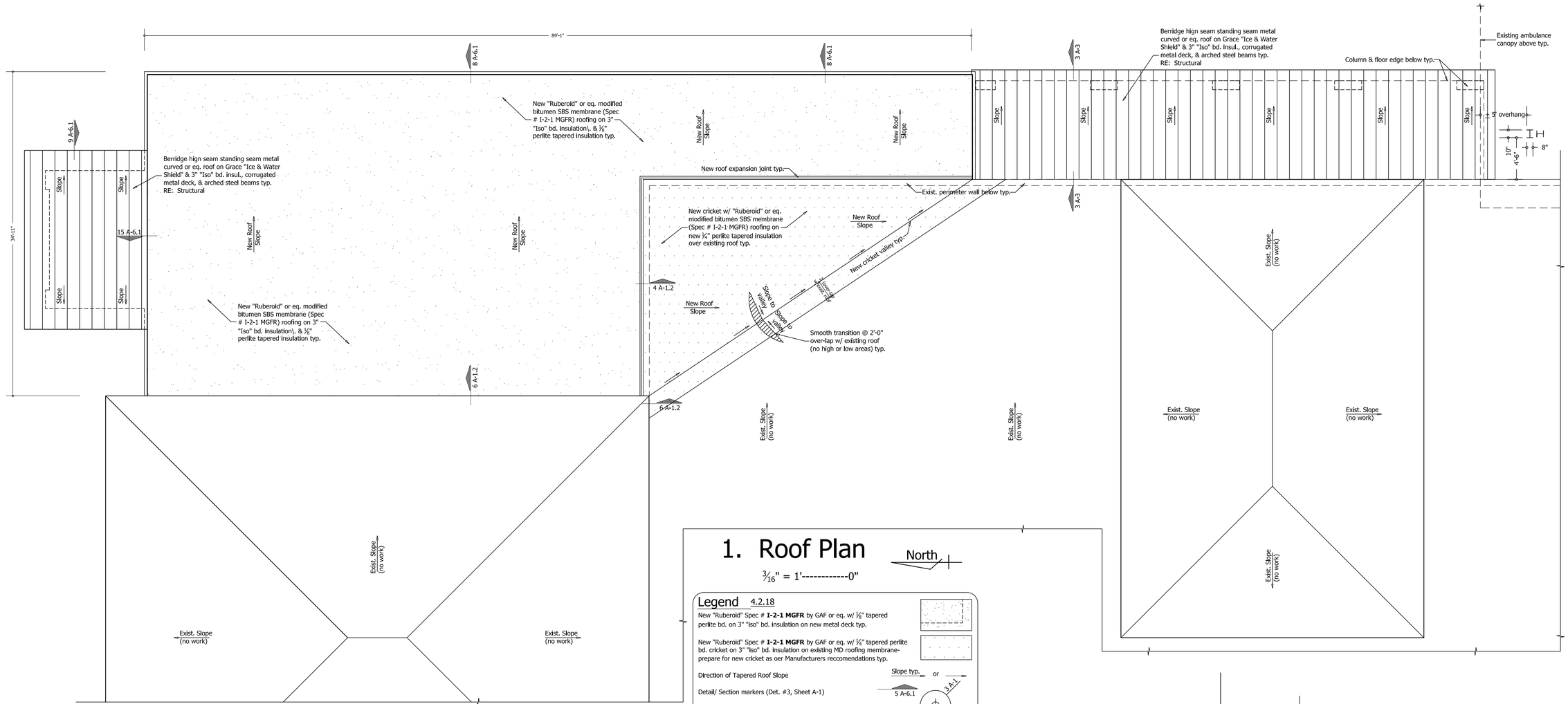

1. Roof Plan

North

3/16" = 1'----------0"

Legend 4.2.18

New "Ruberoid" Spec # **I-2-1 MGFR** by GAF or eq. w/ ½" tapered perlite bd. on 3" "Iso" bd. insulation on new metal deck typ.

New "Ruberoid" Spec # **I-2-1 MGFR** by GAF or eq. w/ ¼" tapered perlite bd. cricket on 3" "Iso" bd. insulation on existing MD roofing membrane- prepare for new cricket as oer Manufacturers reccomendations typ.

Direction of Tapered Roof Slope — Slope typ.

Detail/ Section markers (Det. #3, Sheet A-1) — 5 A-6.1 or 3 A-1

New roof Vent to replace existing (Det. #3, Sheet A-1).

Scope of Work (Starr County Memorial Hospital- 2018)

A. GENERAL NOTES
1. Verify all deminsions, the site (including adjacent conditions, access, & stage areas) the building & roof conditions, and comply w/ all applicable Building Codes.
2. Refer to Notes to Roofing Contractor in specifications for more information typ.
3. Flash all roofing penetrations whether shown or not shown.

B. DEMOLITION at existing roof remove only what can be properly protected/ completed on the same day (coordinate w/ Owner all Utility/ a/c disconnections) & proceed as follows:
1. Disconnect & remove condensation lines, electrical/ conduits/ fixtures/ lines (electrical, low vlotage, or communication, pipes), equipment & any other items in the project area that would otherwise interfere w/ installation of a new roof & new construction.
2. Remove w/ care & store items to be salvaged.
3. Remove only roofing or insulation in the areas of the existing roof that will receive new crickets, valleys, etc.
4. Contractor, Roofing Manufacturers Rep, & Architect shall inspect condition of existing roofing, deck, nailers, etc.to determin the condition of existing roofing elements to remain in the or adjacent to the Project Area. Replace of existing roofing elements shall be priced as per "Unit Cost" identified in the Bid Form. Any repairs to existing roofing (including but not limited to roof deck, flashings, pitch pans, nailers, fasteners, cant strips, expansion joints, roof accessories, pipe boot flashings, etc.) shall be as per Roofing Manufacturer's recommendations. Only after the Contractor, Roofing Manufacturers Rep, & the Architect's approval shall the contractor proceed w/ "cover-up" operations.

C. NEW WORK: Provide the folowing new Roofing w/ Insulation, Flashings, Accessories, items, etc. to repalce existing, as noted below & on the **ROOF PLAN**, & any other item needed & as recommended by the Roofing Manufacturer for this project & the called for warranty (reinstall items removed under "DEMOLITION" as soon as possible):
1. **BASE BID ROOFING SYSTEM:** New GAF Ruberoid Modified Bitumen Mop Roofing System spec **# I-2-1-MGFR** (metal deck, 2 base plys, 1-ply ruberoid, granular mop fire rated top ply) w/ a 15 year NDL warranty) or approved eq. as per GAF recommendations. Mechanicallt attache w/ "GAFTITE" or eq. fasteners 3" of "Iso" board insulation w/ felt facer to metal deck, two (2) plies of fully mopped GAFGLAS Flex Ply 6 on the ⅛" tapered perlite board before a fully mopped "RUBEROID Mop" granular MB cap sheet.
   * Mechanically attach (DRILL-TEC fasteners & plates or as per GAF recommendations) "Energy Guard" polyIso foam roof insulation w/ organic/ glass facers to metal deck.

Scope of Work (cont. Starr County Memorial Hospital- 2018)

* Mechanically attach (DRILL-TEC fasteners & plates or as per GAF recommendations) "Energy Guard" Tapered Perlite (over entire roof including crickets) & "Iso" board to metal deck.
NOTE: Provide extensions for a/c roofing curbs, roof vents, etc. to compensate for new tapered insulation thickness.
* Install roofing system as per I-60 requirements.
2. Flashings (MD membrane), Boot Flashings, Roofing Accessories, mastics, etc.: provide GAF products (or approved equal) for compliance w/ "Base Bid" roofing system & warranty requirements.

D. Contractor to take special precautions not to use or install materials containing asbestos, p.c.b.'s or other hazardous ingredients.

E. Unit Cost Items: If approved by the Owner, the following items may be added to project (RE: "Unit Cost" items submitted w/ the Bid- match exist. items in thickenss, profille, finish, weight, etc. & include all labor, equipment, & material costs for full repalcement):
1. Metal deck to match existing.
2. Treated Wood Nailers (various sizes, list sizes).
3. Wall flashings
4. Tapered board insulation
5. 1 square (100 sq. ft.) of Base Bid Roofing

F. Reconnect & reinstall in full working order all items removed during DEMOLITION.

G. Warranty: All new work / system shall have a 15 yr. NDL warranty

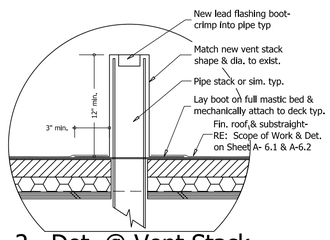

2. Det. @ Vent Stack

1" = 1'----------0"

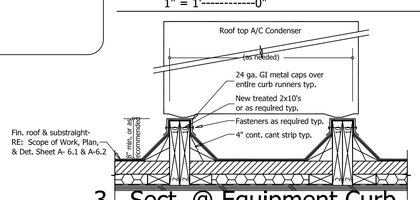

3. Sect. @ Equipment Curb

1" = 1'----------0"

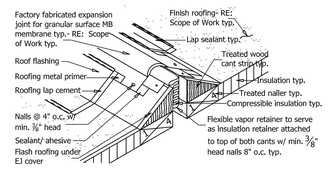

4. Roof Expansion Joint

Not to Scale

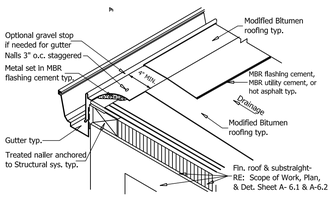

5. Fascia w/ Gutter Det.

Not to Scale

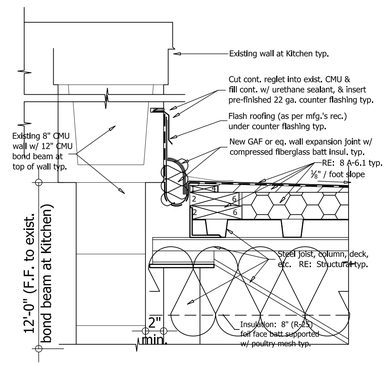

6. New Roof Expansion Jt. Flashing at Exist. Wall

1" = 1'----------0"

PROJECT:

Starr County Memorial Hospital
MRI Addition and Renovation
128 N. FM Road 3167 Rio Grande City, Texas

DESIGN GROUP INTERNATIONAL
DELFINO GARZA JR., • ARCHITECT • 1701 MIER STREET • LAREDO, TEXAS 78043 • (956) 724-6268

REGISTERED ARCHITECT STATE OF TEXAS

DATE: 9-14-18
Registration Expiration Date: 6-30-19

The Texas Board of Architectural Examiners has jurisdiction over complaints regardlng the professional practices of persons registered as architects In Texas.

Texas Board of Architectural Examiners
P.O. Box 12337; Austin, Texas
zip: 78711-2337
phone: (512) 305-8900

SHEET A-1.2
OF A-6

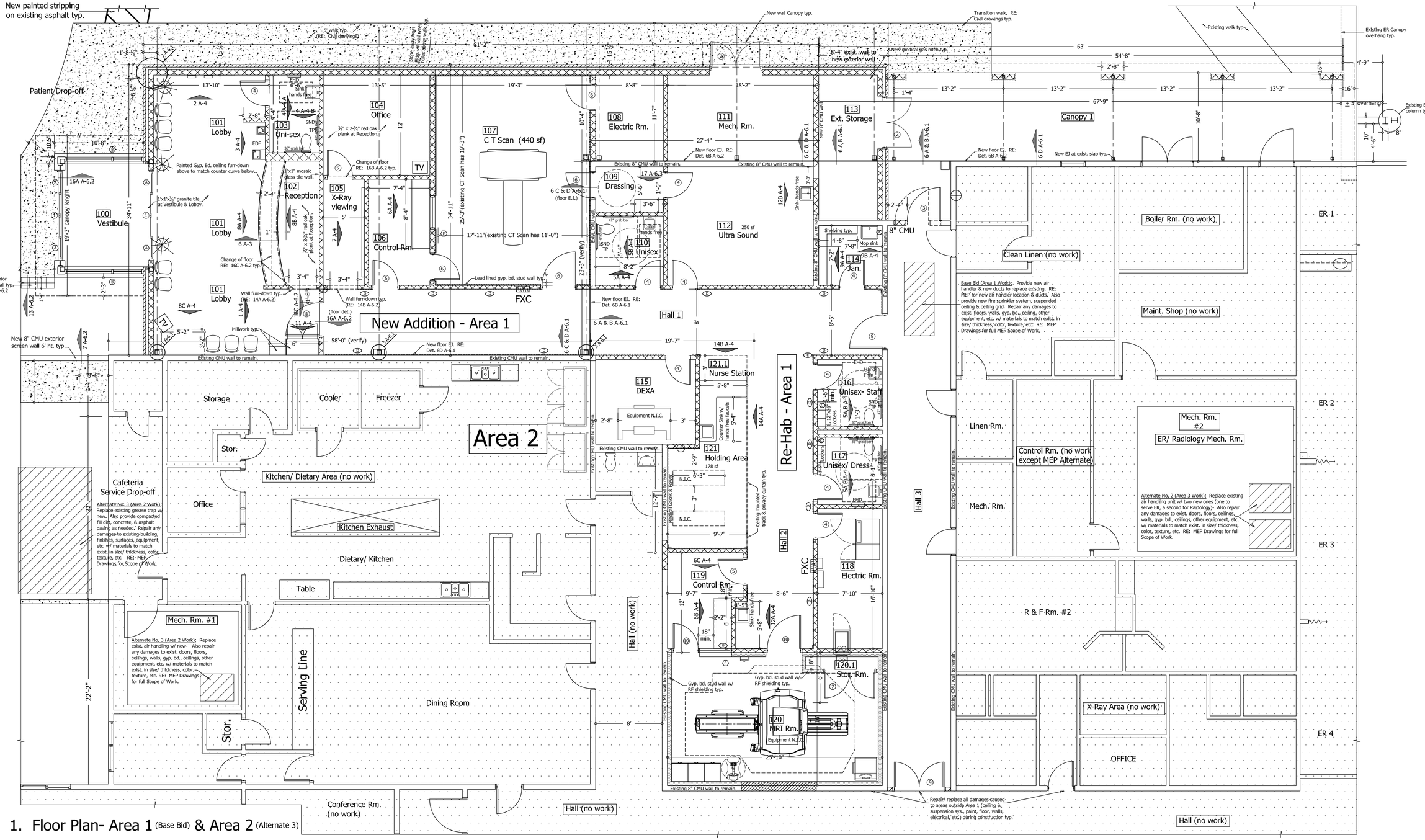
New painted stripping on existing asphalt typ.
Patient Drop-off
Cafeteria Service Drop-off
Alternate No. 3 (Area 2 Work): Replace existing grease trap w/ new. Also provide compacted fill dirt, concrete, & asphalt paving as needed. Repair any damages to existing building, finishes, surfaces, equipment, etc. w/ materials to match exist. in size/ thickness, color, texture, etc. RE: MEP Drawings for Scope of Work.
New 8" CMU exterior screen wall 6' ht. typ.
New exterior garden wall typ. RE: 13 A-6.2
New addition - Area 1
Area 2
Re-Hab - Area 1
100 Vestibule
101 Lobby
102 Reception
103 Uni-sex
104 Office
105 X-Ray viewing
106 Control Rm.
107 C T Scan (440 sf)
108 Electric Rm.
109 Dressing
110 Unisex
111 Mech. Rm.
112 Ultra Sound 250 sf
113 Ext. Storage
114 Jan.
115 DEXA
116 Unisex- Staff
117 Unisex/ Dress.
118 Electric Rm.
119 Control Rm.
120 MRI Rm.
120.1 Stor. Rm.
121 Holding Area 178 sf
121.1 Nurse Station
Hall 1
Hall 2
Hall 3
Hall (no work)
Canopy 1
Existing ER Canopy overhang typ.
Existing ER Canopy column typ.
± 5' overhang
Transition walk. RE: Civil drawings typ.
New wall Canopy typ.
New medical gas pipe typ.
8'-4" exist. wall to new exterior wall
Existing walk typ.
New EJ at exist. slab typ.
Boiler Rm. (no work)
Clean Linen (no work)
Maint. Shop (no work)
Linen Rm.
Control Rm. (no work except MEP Alternate)
Mech. Rm. #2
ER/ Radiology Mech. Rm.
Mech. Rm.
R & F Rm. #2
X-Ray Area (no work)
OFFICE
ER 1
ER 2
ER 3
ER 4
Storage
Cooler
Freezer
Stor.
Kitchen/ Dietary Area (no work)
Office
Kitchen Exhaust
Dietary/ Kitchen
Table
Mech. Rm. #1
Serving Line
Dining Room
Stor.
Conference Rm. (no work)
Base Bid (Area 1 Work): Provide new air handler & new ducts to replace existing. RE: MEP for new air handler location & ducts. Also provide new fire sprinkler system, suspended ceiling & ceiling grid. Repair any damages to exist. floors, walls, gyp. bd., ceiling, other equipment, etc. w/ materials to match exist. in size/ thickness, color, texture, etc. RE: MEP Drawings for full MEP Scope of Work.
Alternate No. 2 (Area 3 Work): Replace existing air handling unit w/ two new ones (one to serve ER, a second for Raidology)- Also repair any damages to exist. doors, floors, ceilings, walls, gyp. bd., ceilings, other equipment, etc. w/ materials to match exist. in size/ thickness, color, texture, etc. RE: MEP Drawings for full Scope of Work.
Alternate No. 3 (Area 2 Work): Replace exist. air handling w/ new- Also repair any damages to exist. doors, floors, ceilings, walls, gyp. bd., ceilings, other equipment, etc. w/ materials to match exist. in size/ thickness, color, texture, etc. RE: MEP Drawings for full Scope of Work.
Repair/ replace all damages caused- to areas outside Area 1 (ceiling & suspension sys., paint, floor, walls, electrical, etc.) during construction typ.
Existing CMU wall to remain.
Existing 8" CMU wall to remain.
New floor EJ. RE: Det. 6B A-6.2
Lead lined gyp. bd. stud wall typ.
Gyp. bd. stud wall w/ RF shielding typ.
Curved wall
Ceiling mounted track & privacy curtain typ.
Shelving typ.
Mop sink
Millwork typ.
Wall furr-down typ. (RE: 14A A-6.2)
Wall furr-down typ. (RE: 14B A-6.2)
Change of floor RE: 16C A-6.2 typ.
Change of floor RE: 16B A-6.2 typ.
Change of floor RE: 168 A-6.2 typ.
Painted Gyp. Bd. ceiling furr-down above to match counter curve below.
1"x1" mosaic glass tile wall.
1"x1"x¾" granite tile at Vestibule & Lobby.
¾" x 2-½" red oak plank at Reception.
¾" x 2-½" red oak plank at Reception.
Counter Sink w/ hands free faucets
Sink- hands free
Equipment N.I.C.
Millwork w/ granite top & backsplash. Base cabinets w/ toe kicks typ. Base cabinets w/ roll-out trays typ. Provide cutouts for sinks where shown. Base cabinets w/ hinges where doors shown typ.
Millwork w/ granite top & backsplash. Base cabinets w/ toe kicks typ. Base cabinets w/ roll-out trays typ. Provide cutouts for sinks where shown. Base cabinets w/ hinges where doors shown typ.
Existing CMU wall to remain. Existing doors & frames to remain.
Existing 8" CMU wall to remain.
Existing 8" CMU wall to remain.
Existing CMU wall to remain.
Existing CMU wall to remain.
Existing

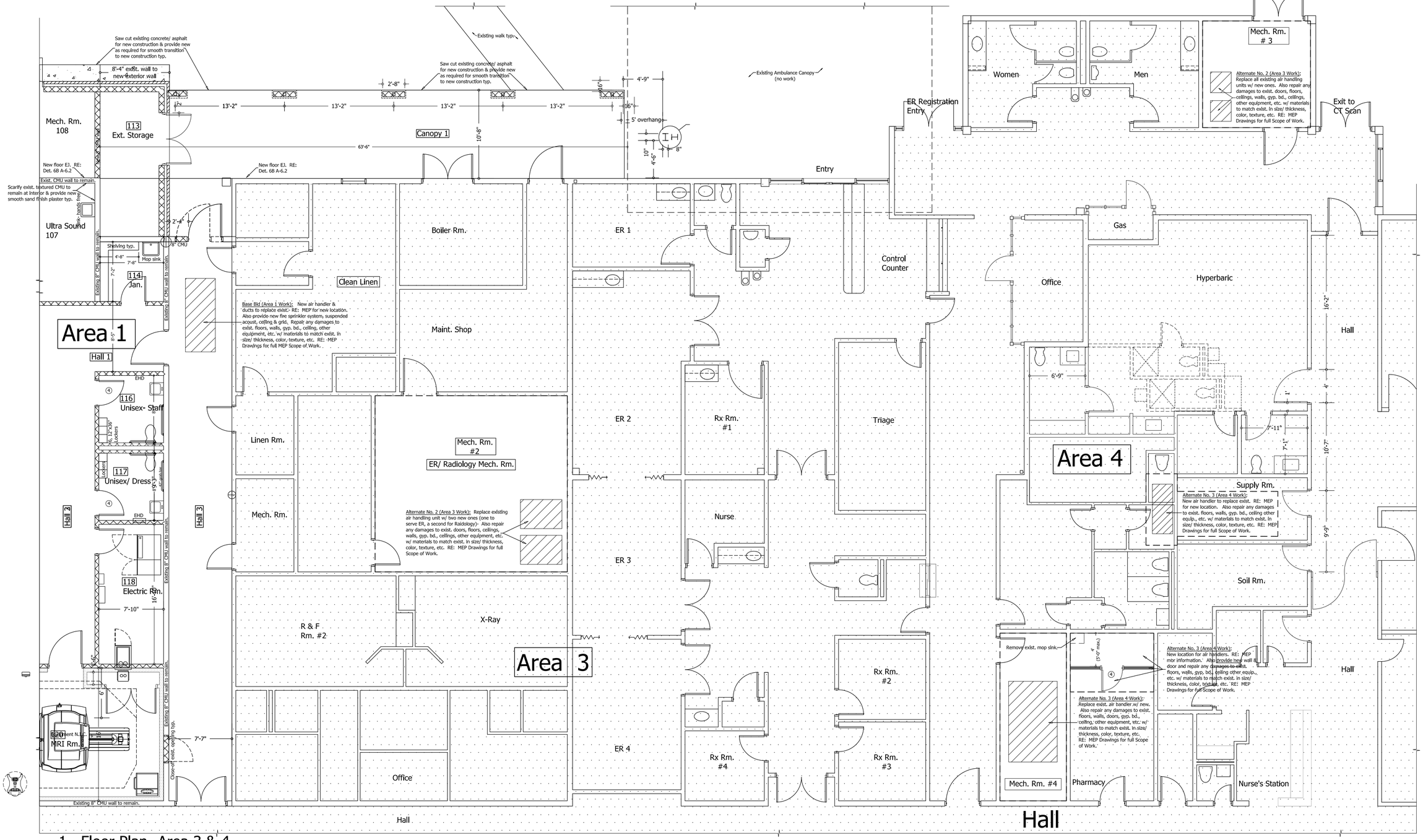

1. Floor Plan- Area 3 & 4

3/16" = 1'----------0"

North

Notes to Contractor:

1. All areas designated "H/C" shall comply w/ handicapped heights, reach requirements, clearances, slopes, ramps, handrails, etc. Refer to Title Sheet for additional information.
2. Please note that the General Contractor & his "Subs" need to refer to all Drawings, including Schedules, for complete instructions on work items.
3. Masonry- A. All outside corners shall have bull-nose finishes typ.
   B. All masonry joints shall be tooled concave smooth joints.
   C. Provide 2 #4 vertical re-bars (embeded in concrete slab) in CMU cells and filled w/ 3000 psi pea gravel concrete at 48 " o.c. typ. on all CMU walls unless noted otherwise in Structural drawings/ specs typ.
4. Gyp. Bd.- A. Studs: Provide 3-½" metal studs at 16" o.c.
   B. Gyp. Bd.: type "X" (⅝" thick) on both sides typ.
   C. Tape, float, sand, texture, and paint all gyp. bd. walls & ceilings typ.
5. Follow all manufacturers installation instructions & provide any and all labor & materials needed (whether shown or not) for a proper and reccommended installation and warranty coverage.
6. The contractor shall repair all damages to existing Areas 2, 3, 4, & 5 during the replacement of air handlers either in Mechanical Rooms or above the ceiling. These damages include but are not limited to damages to floors, walls, ceiling systems, doors, electrical systems, communication / low voltage systems, etc.
7. In the case of broken items (ceiling tiles, ceiling suspension system, doors, etc.), replace with a new item to match existing.
8. Refer to Scope of Work on Sheet AD-1 for other work.

LEGEND: NOTE- RE: Ceiling Plan for Wall types

- New exterior masonry veneer wall w/ 8" CMU back-up typ.
- New 6" CMU walls unless noted otherwise typ.
- New 2x4 metal stud (3 ⅝")wall (16" o.c.) w/ ⅝" type "X" gyp. bd. on both sides typ.
- Existing wall to remain typ.
- Existing wall to be removed typ.
- New opening on existing wall typ.
- Close off existing opening w/ new material to match existing (If CMU, remove partial units & replace w/ whole) typ.
- Room Name & Number — 125 Hall
- Areas not in Contract (N.I.C.) or outside Scope of Work typ.
- New Concrete work (2500 psi walks & curbs, 3000 psi other
- Interior Elevation Marker typ. — (Detail 1, Sheet A-1) → 1 A-1
- Building/ Section Marker typ. — 1 A-1 (Detail 1, Sheet A-1) → 1 A-1 or
- New Door, Frame, & Number (6) typ.
- Specialty Schedule:
  - A Bobrick B-223 x 48 or eq. Broom & Mop holder
  - B Miniblind at all interior windows (size as per window)
  - C New Bobrick B-232 x 36 or eq. hook strip
  - D New Wall Guard
  - E Stainless Steel Corner guards
  - F 2 tier lockers (12"W x 18"D x 36"ht. ea.)
- New Window & Type (B) typ.
- Fire Extinguisher & cabinet w/ max. 4" protrudtion & 48" max. AFF ht. of handle typ. — FXC or FXC
- Eletric drinking fountain (mount h/c fountain bubbler 36" max. AFF) — EDF
- Paper towel dispenser- RE: Specs typ. — PT
- New Plumbing fixture or to replace exist. (Mop Sink shown) Re: MEP Drawings
- TV wall bracket for flat panel w/ masonry mts. to Da-lite model WML-25"x13.5", 80" clear AFF — TV
- Match floor finish elevations — flush F.F.'s; bottom of ramp; top of ramp
- Electric Hand Dryer (protrude 4" max., 42" max. AFF) — EHD
- Paper Towel Dispenser (protrude 4" max., 42" max. AFF) — TP
- Sanitary Napkin Dispenser- 1/ Women toilet stall (max. 4" protrusion, 7" to 9" in front of water closet, & 15"-48" ht. w/ grab bar clearance) — SND

Acronyms / abbreviations: "AFF" (above finish floor); "bd." (board) "Det." or "det." (detail); "EJ" (expansion joint); "exist."(existing); "FF", "F.F." (finish floor); "ht." (height); "insul." (insulation); "max." (maximum); "Mfr." (manufacturer); "mt." (mounted/ mounting); "RE:" (refer to); "rec." (recommended/ recommendations) "o.c." (on center); "typ." (typical or same as similar cases); "w/" (with); "wdw." (window);

PROJECT:
Starr County Memorial Hospital
MRI Addition and Renovation
128 N. FM Road 3167 Rio Grande City, Texas

DESIGN GROUP INTERNATIONAL
DELFINO GARZA JR., • ARCHITECT • 1701 MIER STREET • LAREDO, TEXAS 78043 • (956) 724-6268

DATE: 9-14-18
Registration Expiration Date: 6-30-19
The Texas Board of Architectural Examiners has jurisdiction over complaints regarding the professional practices of persons registered as architects in Texas.
Texas Board of Architectural Examiners
P.O. Box 12337; Austin, Texas
zip: 78711-2337
phone: (512) 305-8900

SHEET A-2.2
OF A-6

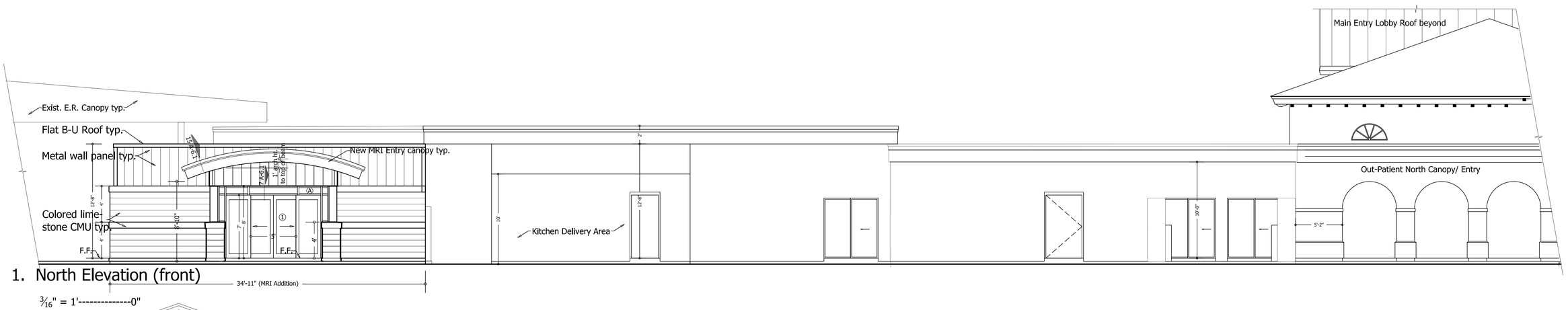

1. North Elevation (front)

3/16" = 1'----------0"

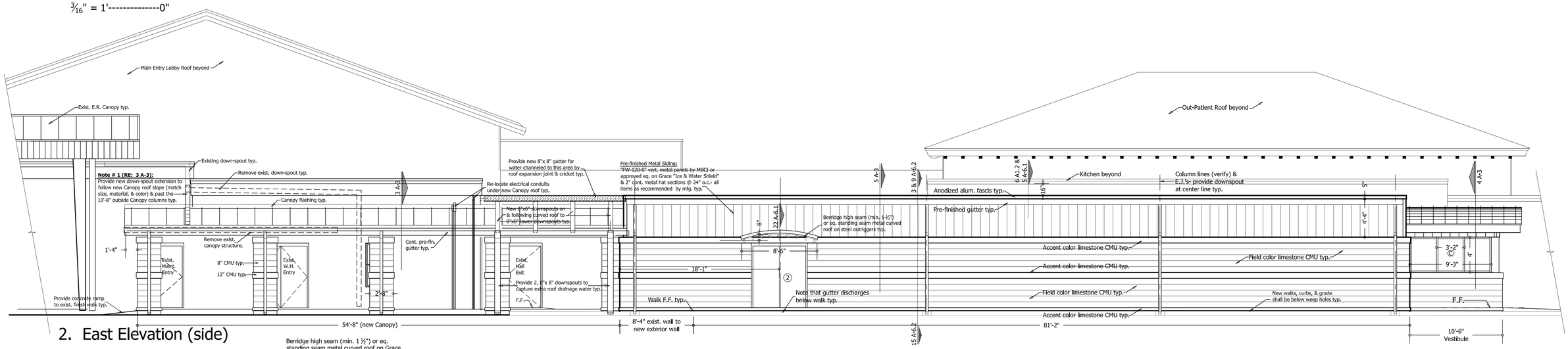

2. East Elevation (side)

3/16" = 1'----------0"

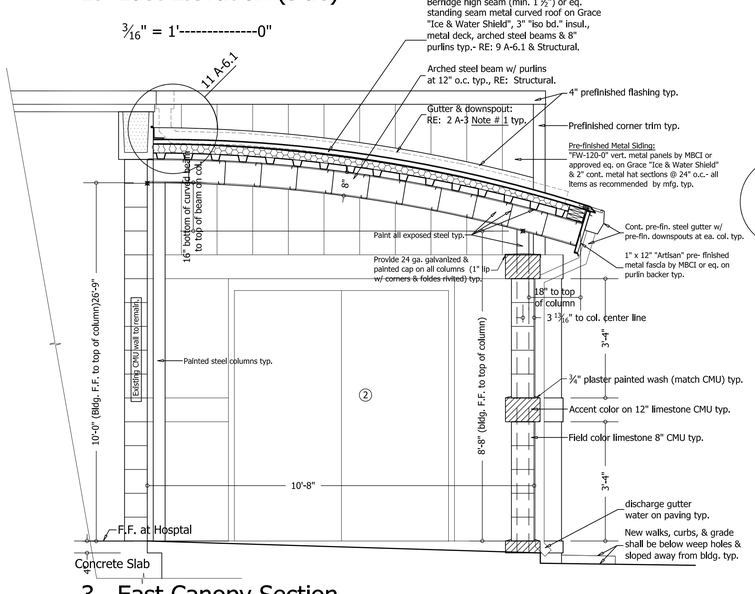

3. East Canopy Section

½" = 1'----------0"

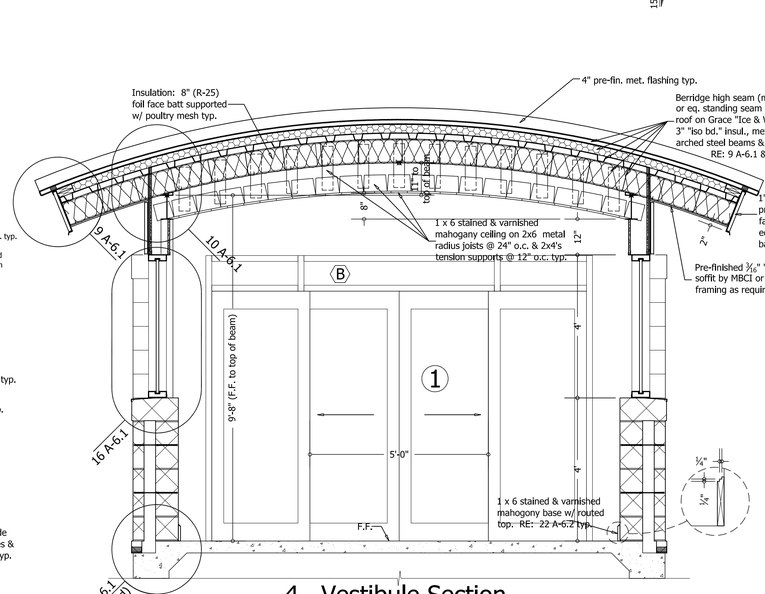

4. Vestibule Section

½" = 1'----------0"

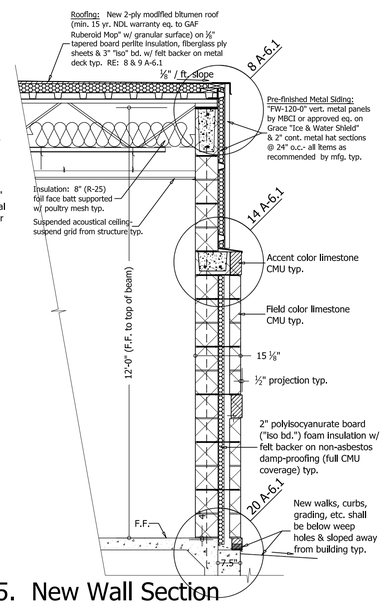

5. New Wall Section

½" = 1'----------0"

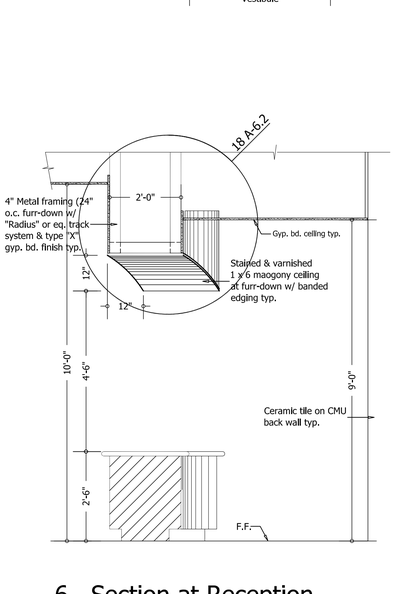

6. Section at Reception

½" = 1'----------0"

PROJECT:

Starr County Memorial Hospital
MRI Addition and Renovation
128 N. FM Road 3167 Rio Grande City, Texas

DESIGN GROUP INTERNATIONAL
DELFINO GARZA JR., • ARCHITECT • 1701 MIER STREET • LAREDO, TEXAS 78043 • (956) 724-6268

DATE: 9-14-18
Registration Expiration Date: 6-30-19

The Texas Board of Architectural Examiners has jurisdiction over complaints regarding the professional practices of persons registered as architects in Texas.

Texas Board of Architectural Examiners
P.O. Box 12337; Austin, Texas
zip: 78711-2337
phone: (512) 305-8900

SHEET A-3
OF A-6

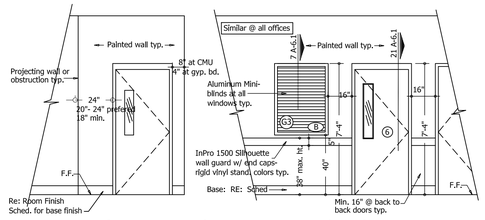

1. Door Clearance/ Typ. Door/Wdw.

¼"= 1'-------0"

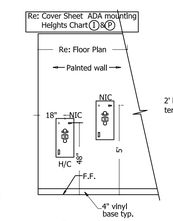

2. Public Phones

¼"= 1'-------0"

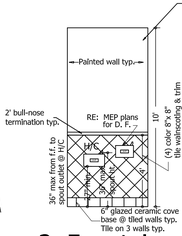

3. Fountains

¼"= 1'-------0"

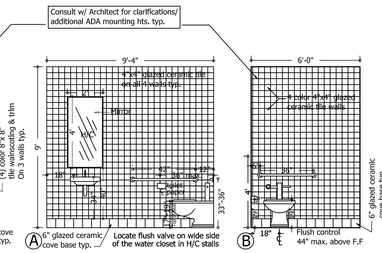

4. Unisex R.R. Rm.103

¼"= 1'-------0"

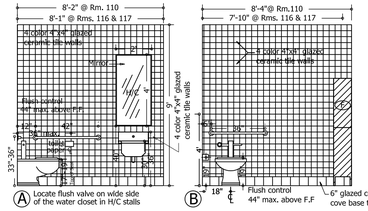

5. Unisex R.R. Rms.110,116,117

¼"= 1'-------0"

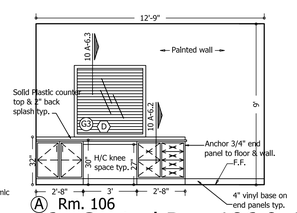

6. Control Rm. 106 & 119

¼"= 1'-------0"

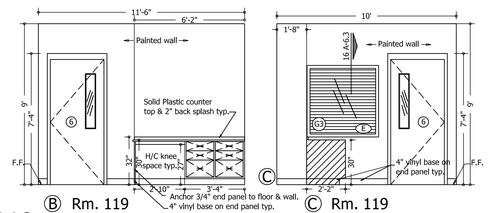

Rm. 106 Rm. 119 Rm. 119

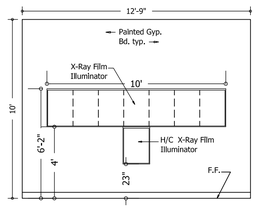

7. X-Ray Illuminator Rm.

¼"= 1'-------0"

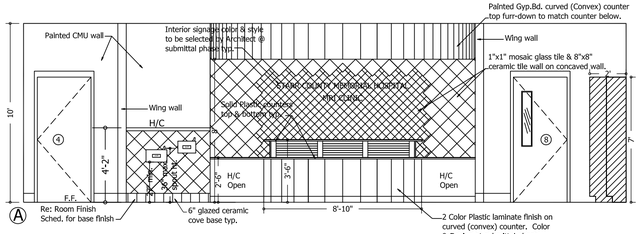

8. Reception Counter Rm. 102

¼"= 1'-------0"

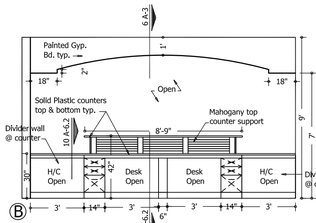

8. Reception 102

¼"= 1'-------0"

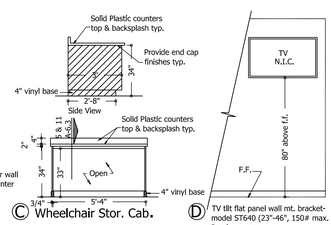

Wheelchair Stor. Cab.

8. Recept./Lobby/Office

¼"= 1'-------0"

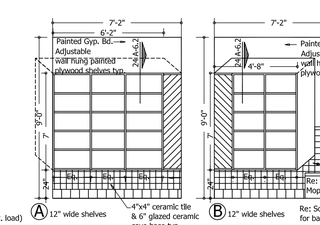

9. Wall Shelving- Rm. 114

¼"= 1'-------0"

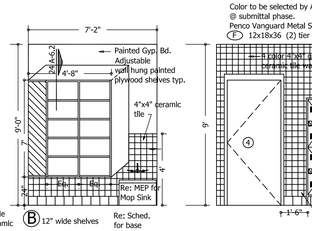

10. Lockers Rms.116 & 117

¼"= 1'-------0"

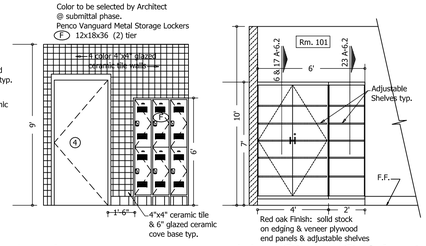

11. Stor. Cabinet

¼"= 1'-------0"

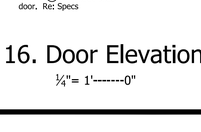

12 A. Wall Sink Elev.

¼"= 1'-------0"

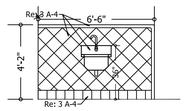

12B. Wall Sink Elev.

¼"= 1'-------0"

Consult with Achitect for sign location

STARR COUNTY MEMORIAL HOSPITAL

18"

Name & Location of sign to be determined at job site (1 sign)

Lettering by CCSW or approved eq.
Letter Style: Optima 129
Finish: to be determined later
Projected Spacer Mounting

Ⓐ Building Sign

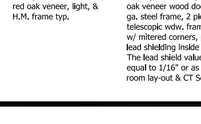

Ⓑ Building Plaque

13. Building Signage & Plaque Elev.

NTS

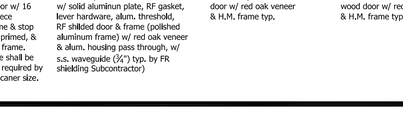

14. Nurse Station

¼"= 1'-------0"

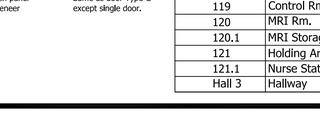

Type Ⓐ Kawneer EnCORE Storefront framing system (1-3/4" x 6" front glaze) or approved eq. Clear Anodized Finish

Type Ⓑ Kawneer EnCORE Storefront framing system (1-3/4" x 6" front glaze) or approved eq. Clear Anodized Finish

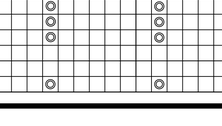

15. Window/Door Elevations

¼"= 1'-------0"

DOOR SCHEDULE

No.	SIZE	THK.	TYPE	MATERIAL		DETAILS		
				DOOR	FRAME	Frame SIZE	HEAD	JAMB	SILL
1	6'-0" x 7'-0"	2"	A	Alum.	Alum.	1-3/4" X 6"	7 A-6.1	20 A-6.2	7 A-6.1
2	6'-0" x 7'-0"	1-3/4"	B	S.C. Hollow Metal	H.M.	2" X 8"	13 A-6.1	19 A-6.2	13 A-6.1
3	4'-0" x 7'-2"	1-3/4"	C	S.C. Hollow Metal	H.M.	2" X 5-1/2"	13 A-6.1	19 A-6.2	13 A-6.1
4	3'-0" x 7'-2"	1-3/4"	D	S. C. Wood	H.M.	2" X 5-1/2"	19 A-6.1	Jamb sim.	19 A-6.1
5	3'-0" x 7'-2"	1-3/4"	E	S. C. Wood	H.M.	2" X 5-1/2"	19 A-6.1	Jamb sim.	19 A-6.1
6	RE: Door Elev.	2"	F	S. C. Wood	H.M.	2" X 8"	4 A-6.3	Jamb sim.	4 A-6.3
7	6'-0" x 7'-2"	2"	G	S. C. Wood	H.M.	2" X 5-1/2"	19 A-6.3	Jamb sim.	9 A-6.3
8	4'-0" x 7'-2"	1-3/4"	H	S. C. Wood	H.M.	2" X 5-1/2"	19 A-6.1	Jamb sim.	19 A-6.1
9	6'-0" x 7'-2"	1-3/4"	I	S. C. Wood	H.M.	2" X 5-1/2"	19 A-6.1	Jamb sim.	19 A-6.1
10	RE: Door Elev.	2"	J	S. C. Wood	Alum.	2" X 8"	3 A-6.3	Jamb sim.	9 A-6.3

REMARKS: All doors, frames, and hardware shall comply w/ ADA, International Building Codes, or Fire Code requirements.

1. Door hardware (hdwe.) supplier shall review alum. door mfr. hdwe. spec & provide any missing hdwe. for alum. door as well as cylinders or cores for complete keying sys.
2. Door hdwe. supplier shall provide any hdwe. not in schedule but required by ADA, International Building or Fire Code requirements, and for proper operation/ security.
3. Provide weather stripping, 3" rain drip, door bottom alum. sweep, & alum. threshold for all exterior doors w/ steel frames
4. 1 hour, labled door, frame, & hardware
5. Provide air screen Re: MEP
6. Provide lead shielding for door & frame (equal to 1/16" thick).
7. Provide radio frequancy shielding for door & frame.

GLAZING SCHEDULE

- G1 — 1" insulated & tempered glass eq. to PPG Sungate 500 low-E Class w/ Solargray tint.
- G2 — 1" insulated glass eq. to PPG Sungate 500 low-E Class w/ Solargray tint.
- G3 — x-ray radiation shielded glass (the lead shield value as required for the room lay-out & the CT Scan unit size).
- G4 — radio frequency (RF) shielded glass (the RF shield value as required for the room lay-out & MRI unit size) by (labor & mat.) RF sub-contractor.
- G5 — ¼" glass eq. to PPG Sungate 500 low-E Class w/ Solargray tint.

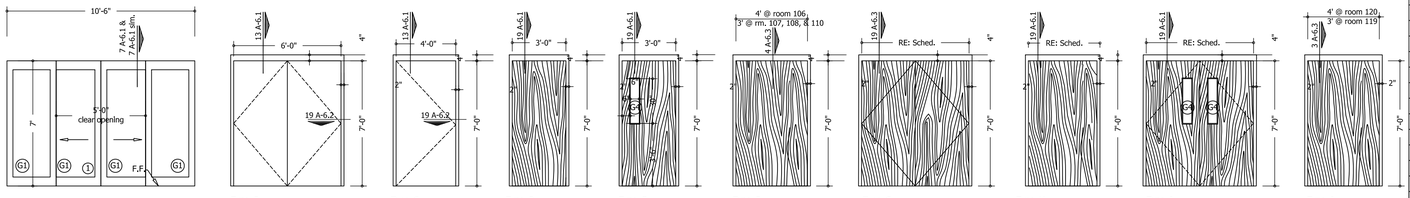

Type A
Door # 1 Automatic Slider door. Re: Specs

Type B
Door # 2 (exterior): S.C. flush panel hollow metal door & frame.

Type C
Door # 3 : S.C. flush panel hollow metal door & frame.

Type D
Door # 4 : (interior) S.C. flush panel wood door w/ red oak veneer, & H.M. frame typ.

Type E
Door # 5 (interior): S.C. flush panel wood door w/ red oak veneer, light, & H.M. frame typ.

Type F
Door # 6 (to CT Scan & Ultra Sound): S.C. flush panel red oak veneer wood door w/ 16 ga. steel frame, 2 piece telescopic wdw. frame & stop w/ mitered corners, primed, & lead shielding inside frame. The lead shield value shall be equal to 1/16" or as required by room lay-out & CT Scaner size.

Type G
Door # 7 (double door to MRI): S.C. flush panel wood door w/ solid aluminun plate, RF gasket, lever hardware, alum. threshold, RF shilded door & frame (polished aluminum frame) w/ red oak veneer & alum. housing pass through, w/ s.s. waveguide (½") typ. by FR shielding Subcontractor)

Type H
Door # 8 (interior): S.C. flush panel wood door w/ red oak veneer & H.M. frame typ.

Type I
Door # 9 (interior): 1 hour fire rated door. S.C. flush panel wood door w/ red oak veneer & H.M. frame typ.

Type J
Door # 10 (doors to MRI): Same as door Type G except single door.

16. Door Elevations

¼"= 1'-------0"

ROOM FINISH SCHEDULE

Room #s	Room Name	FLOOR						BASE				WALL						CEILING							HT.	REMARKS
		None	Monolithic Sheet Vinyl	12"x 12" Granite Tile	Red Oak Flooring	2"x 2" Porcelain Tile	1'x1' Vinyl Composition Tile (match color/pattern)	Industrial Marine Painted Concrete	None	8" Glazed Cove Ceramic Tile	4" Vinyl base	Aluminum Cove Cap	6" Red Oak wood base w/ routed top	6" Glazed Cove Ceramic Tile	None	Painted Gyp. Bd./ CMU / wall	8" x 8" Ceramic Tile	4" x 4" Glazed Ceramic Tile	1" x 1" glass mosaic tile	Wood chair mold wainscotting	Plastic Wall Guard (Re: Specs)	None	2x4 susp. acoust. w/ alumn. susp. system	1x6 stained Mahogany arched ceiling	Painted Type 'X' Gyp. Bd.	Metal Soffit	Painted Stucco	Open to Structure	Paint all exposed steel inc. bottom of roofing		
		▨							▨						▨							▨								
1	Canopy						◎	◎								◎												◎	varies	8'-8" from bldg. F.F. to top of column
100	Vestibule			◎									◎			◎								◎					9'-0"	Ceiling Ht. Varies, 4
101	Lobby			◎	◎								◎			◎				◎					◎				10'-0"	Note 4
102	Reception				◎					▨			◎			◎	▨		▨						◎				9'-0"	Note 4
103	Uni-sex					◎								◎		◎			◎						◎				9'-0"	Notes 4 & 5
104	Office				◎								◎			◎									◎				9'-0"	Note 4
105	X-Ray view area	◎										◎				◎					◎		◎						10'-0"	Notes 1
106	Control Rm.	◎										◎				◎					◎		◎						9'-0"	Notes 1 & 7
107	CT. Scan	◎										◎				◎					◎		◎						9'-0"	Notes 1, 7, & 9
108	Electrical Rm.	◎										◎				◎					◎								9'-0"	Notes 1 & 3
109	Dressing Rm.	◎										◎				◎					◎								9'-0"	Notes 1
110	Uni-sex				◎									◎		◎			◎						◎				9'-0"	Notes 4 & 5
111	Mechanical Rm.					◎	◎									◎												◎	Open	Notes 2
112	Ultra Sound	◎										◎				◎					◎								9'-0"	Notes 1 & 7
113	Exterior Storage					◎	◎									◎											◎		9'-0"	Note 4
114	Janitor Storage				◎									◎		◎			◎						◎				9'-0"	Notes 4 & 5 -Provide 4'-0" tile wainscot
Hall 1	Hallway	◎										◎				◎					◎		◎						10'-0"	Notes 1
Hall 2	Hallway	◎										◎				◎					◎		◎						10'-0"	Notes 1
115	Dexa 1	◎										◎				◎							◎						9'-0"	Notes 1
116	Uni-sex				◎									◎		◎			◎						◎				9'-0"	Notes 4 & 5
117	Uni-sex				◎									◎		◎			◎						◎				9'-0"	Notes 4 & 5
118	Electric Rm.	◎										◎				◎					◎								10'-0"	Notes 1
119	Control Rm.	◎										◎				◎					◎								9'-0"	Notes 1
120	MRI Rm.	◎										◎				◎					◎								9'-0"	Notes 1 & 7
120.1	MRI Storage	◎										◎				◎					◎								9'-0"	Notes 1 & 7
121	Holding Area																												9'-0"	
121.1	Nurse Station																												9'-0"	
Hall 3	Hallway						◎			◎						◎							◎						10'-0"	Notes 1 & 8

NOTES: Consult w/ Architect for any changes.

1. All susp. account. clg. & Alum. grid sys. shall be moisture & sag resistant & fire rated.
2. Ceiling open to structure shall have deck & joists sprayed w/ fire proofing or sprinklered.
3. Adjust ceiling height if required.
4. Stucco or gyp. bd. ceilings on metal lath & 2x6 metal framing 24" O.C. susp. from structure.
5. Ceramic tile on all four walls. (F.F. to ceiling ht.)
6. Re: Ceiling plan for more ceiling hts.
7. Paint MRI walls with Mfg. recommended for wall system.
8. Match existing floor & wall (material, color, & pattern).
9. Provide 1/16" thick lead shielding on Gyp. Bd. walls.

PROJECT:

Starr County Memorial Hospital

MRI Addition and Renovation

Rio Grande City, Texas

DESIGN GROUP INTERNATIONAL, INC.
DELFINO GARZA JR., • ARCHITECT • 1701 MIER STREET • LAREDO, TEXAS 78043 • (956) 724-6268

REGISTERED ARCHITECT DELFINO GARZA JR. STATE OF TEXAS

September 14, 2018

DATE:

Registration Expiration Date:

June 30, 2019

The Texas Board of Architectural Examiners has jurisdiction over complaints regarding the professional practices of persons registered as architects in Texas.

Texas Board of Architectural Examiners
P.O. Box 12337- Austin, Texas
zip: 78711-2337
phone: (512) 305-8900

SHEET

A-4

OF A-6

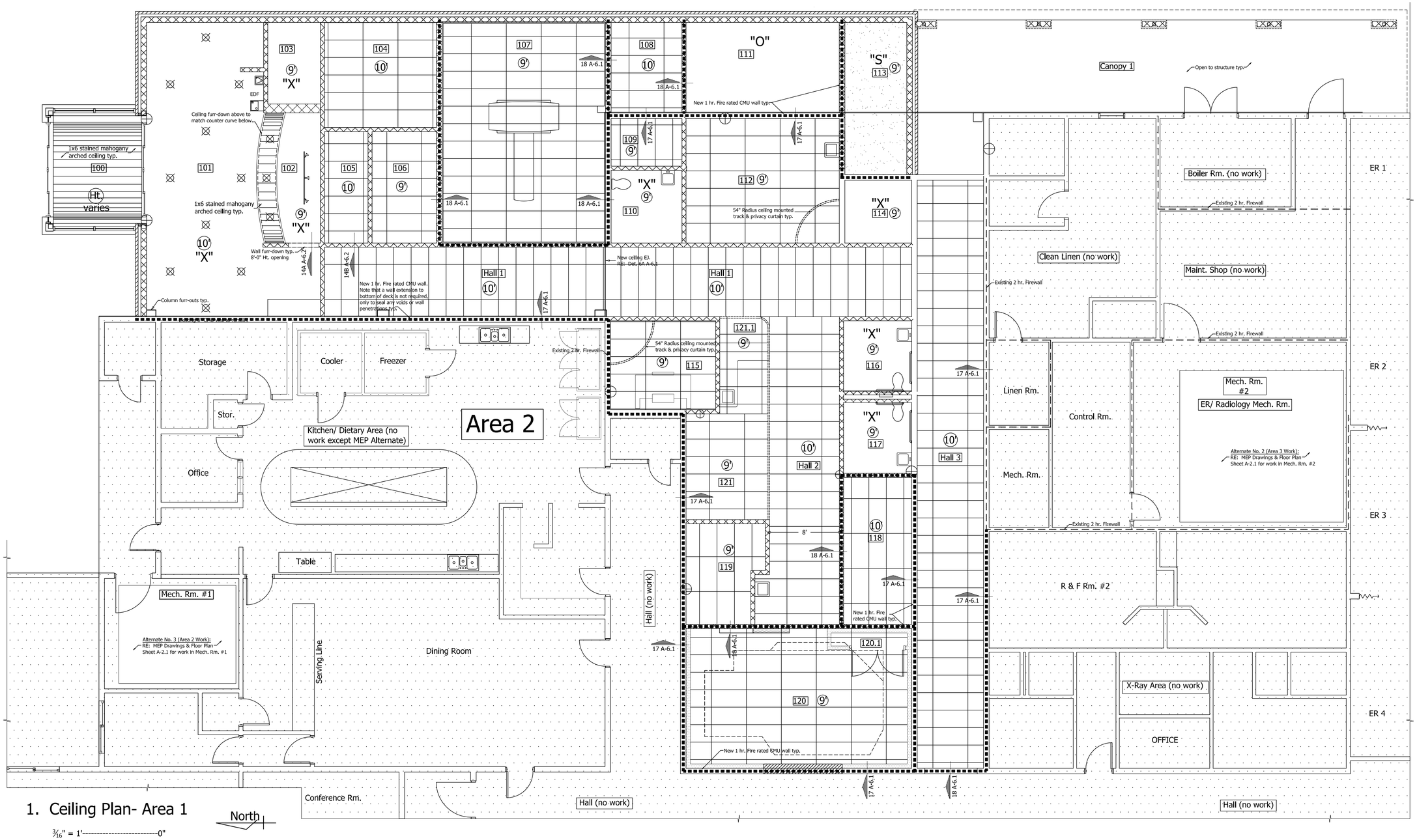

1. Ceiling Plan- Area 1

North

3/16" = 1'----------0"

LEGEND:

CEILING SCHEDULE (Armstrong or eq.)

LOCATION	PANEL & No.	SUSPENSION SYS.
Hallways (Area 1)	Ultima Health Zone #1938 (2x4x3/4") Tegular - Fine Texture	Prelude Plus XL 15/16" Aluminum grid
Office, Electric Rms., CT Scan, Control Rms., Ultra Sound, DEXA MRI Rm. & Stor. (Area 1)	Optima Health Zone #3252 (2x4x3/4") Tegular - Fine Texture	Prelude Plus XL 15/16" Aluminum grid
All other areas of work (rehab &/ or repairs)	Match Existing ceiling type, color, & style	Match Existing ceiling grid, color, & style

Notes:
If steel structure or Mechanical systems do not allow for the ceiling height required, consult w/ the Architect & the General Contractor prior to installation. Note that additional cost for started work will not be approved.

Suspended Acoustical ceiling & grid typ.

⅝" type "X" (fire code) gyp. bd. ceiling w/ sand text. on 2x6 metal joist framing on 16" o.c. suspended from steel structure typ. — "X"

Mech. Mezzanine above w/ all walls rated for 1 hr. & extended to bottom of roof deck typ. (If CMU walls below line-up w/ Mezz. walls, continue w/ CMU. If not, walls shall be 2x6 metal studs @ 16" o.c. w/ type "X" gyp. bd. on both sides).

Stucco Ceiling typ. — "S"

FW 120-2 metal soffit by MBCI or approved Eq. — "MS"

Open to Structure — "O"

Existing CMU wall w/ new 1 hr. fire rating- extend to roof deck. RE: Det. # 17 A-6.1

New CMU wall w/ 1 hr. fire rating- extend to roof deck. RE: Det. # 18 A-6.1

Existing Fire Rated Wall

Existing CMU wall w/ new 1 hr fire rating- extend new type "X" gyp. bd. wall to bottom of deck. RE: Det. # 12 A-8.1

Ceiling Height (9'-4" ht.) — 9'-4"

Recessed Can Lighting

Detail Section Marker — Detail No. 18 A-8.1 Sheet No.

Notes to Contractor:

1. The contractor shall repair all damages to existing Areas 2, 3, 4, & 5 during the replacement of air handlers either in Mechanical Rooms or above the ceiling. These damages include but are not limited to damages to floors, walls, ceiling systems, doors, electrical systems, communication / low voltage systems, etc.
2. In the case of broken items (ceiling tiles, ceiling suspension system, doors, etc.), replace with a new item to match existing.
3. Refer to Scope of Work on Sheet AD-1 for other work.

PROJECT:
Starr County Memorial Hospital
MRI Addition and Renovation
128 N. FM Road 3167 Rio Grande City, Texas

DESIGN GROUP INTERNATIONAL
DELFINO GARZA JR., • ARCHITECT • 1701 MIER STREET • LAREDO, TEXAS 78043 • (956) 724-6268

REGISTERED ARCHITECT STATE OF TEXAS

DATE: 9-14-18
Registration Expiration Date: 6-30-19

The Texas Board of Architectural Examiners has jurisdiction over complaints regarding the professional practices of persons registered as architects In Texas.

Texas Board of Architectural Examiner
P.O. Box 12337: Austin, Texas
zip: 78711-2337
phone: (512) 305-8900

SHEET A-5
OF A-6

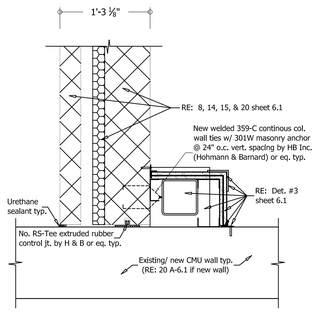

1. New Column @ Exist. Wall

1"= 1'----------0"

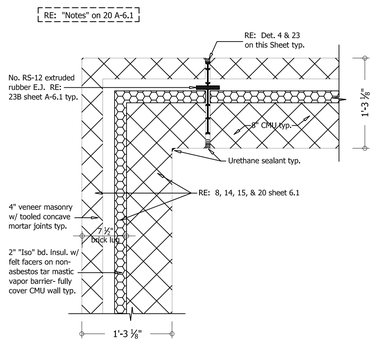

2. Exterior Corner Wall Det.

1"= 1'----------0" Det. A

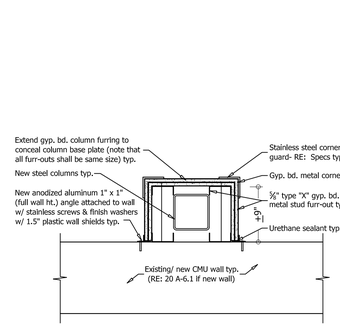

3. Interior Column Det.

1" = 1'----------0"

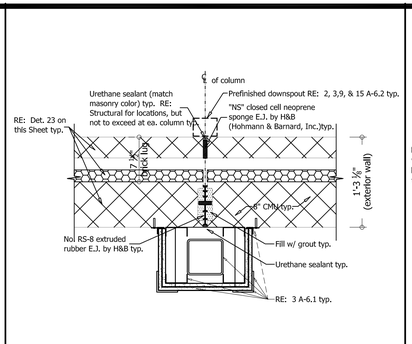

4. Exterior Wall Exp. Jt. Det.

1"= 1'----------0"

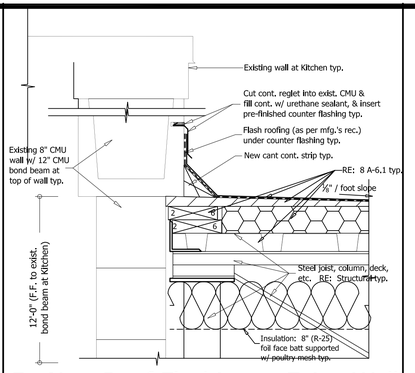

5. New Roof Flashing to Exist. Wall

1 ½"= 1'----------0" min.

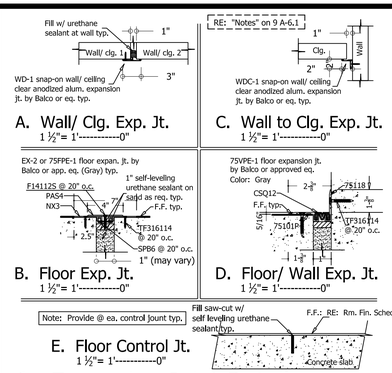

6. Expansion Joint Details

1"= 1'----------0"

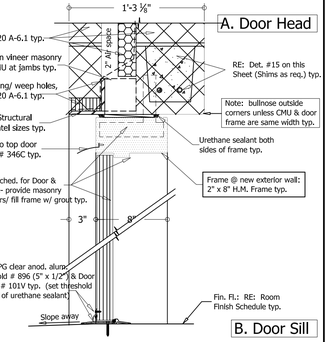

7. Automatic Sliding Door

1 = 1'----------0"

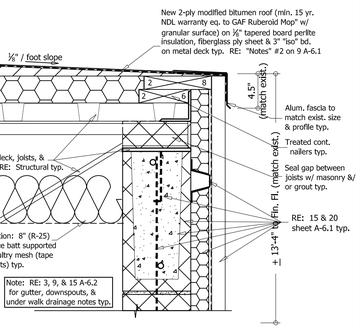

8. Wall Sect. at Top of Wall

1 ½" = 1'----------0"

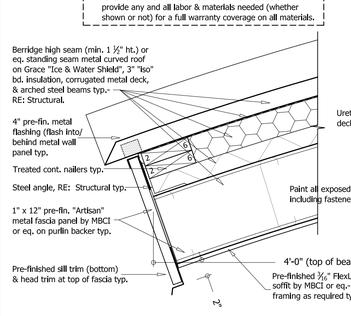

9. Vestibule Roof Fascia Sect.

1 ½" = 1'----------0"

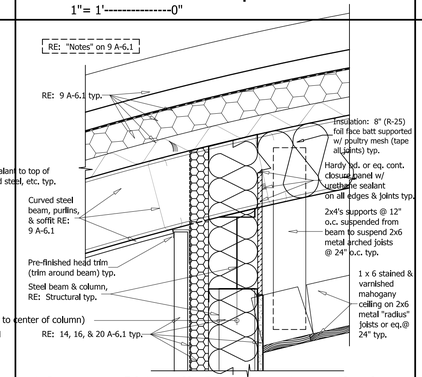

10. Roof/ Wall Sect. at Vestibule

1 ½" = 1'----------0"

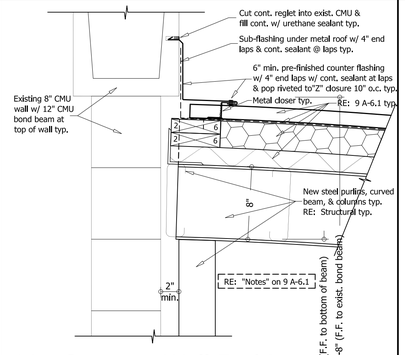

11. Canopye Wall Fashing

1 ½" = 1'----------0"

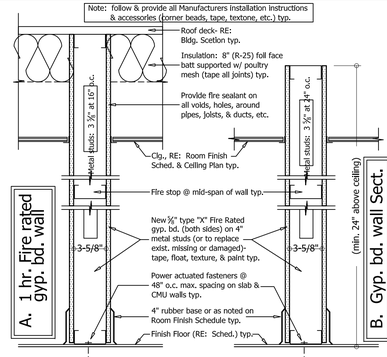

12. Gyp. Bd. Partition- New & Repair Exist.

1-1/2"= 1'----------0"

13. New Ext. Door Head & Sill

1 ½" = 1'----------0"

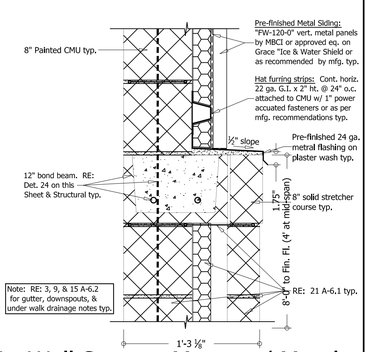

14. Wall Sect. at Masonry/ Metal

1 ½" = 1'----------0"

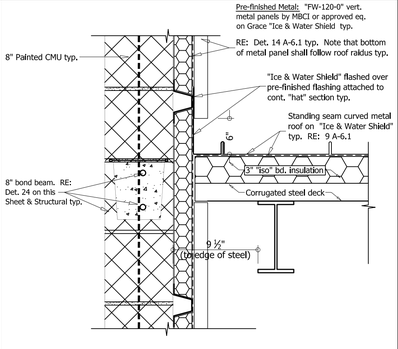

15. Wall Flashing @ Arched Roof

1 ½" = 1'----------0"

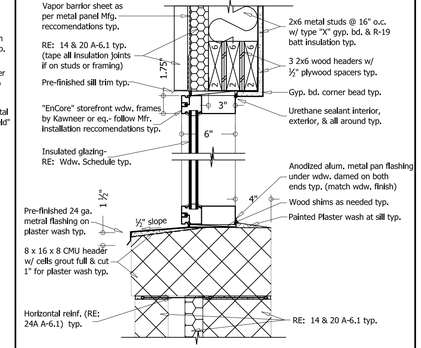

16. Wdw. Sect. at Vestibule

1 ½" = 1'----------0"

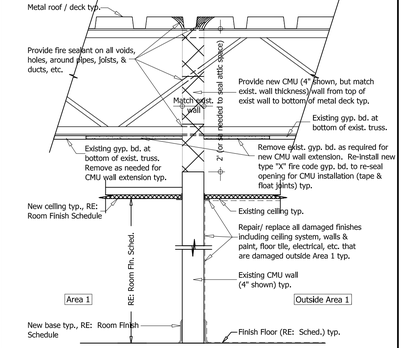

17. 1 hr. Fire Rate Exist. CMU Wall

1"= 1'----------0"

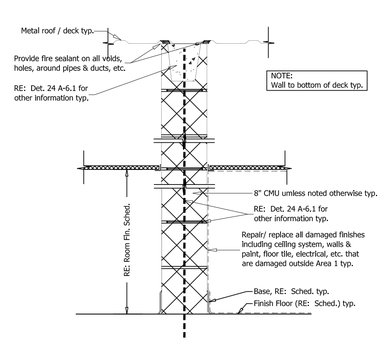

18. CMU Fire Rated Partion Sect.

1"= 1'----------0"

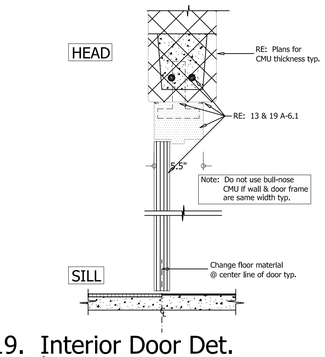

19. Interior Door Det.

1 ½" = 1'----------0"

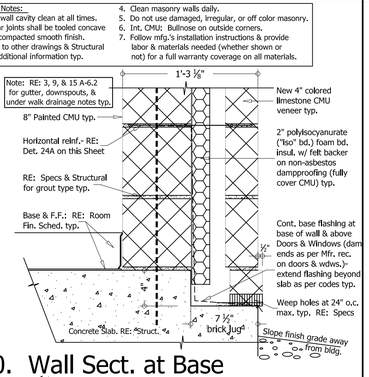

20. Wall Sect. at Base

1 ½" = 1'----------0"

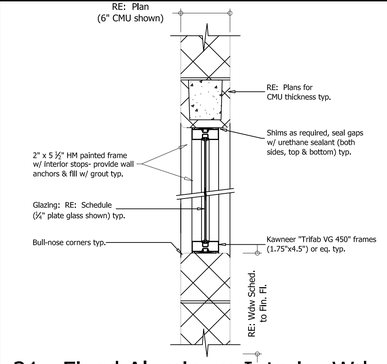

21. Fixed Aluminum Interior Wdw.

1-½"= 1'----------0"

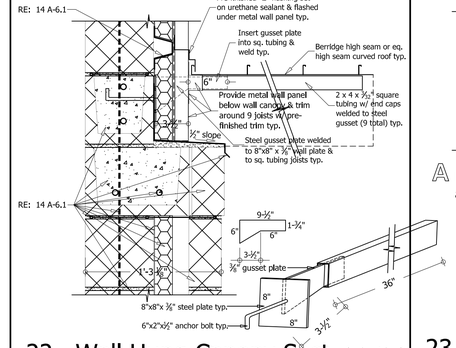

22. Wall Hung Canopy Sect. (w/ raidus)

1 ½" = 1'----------0"

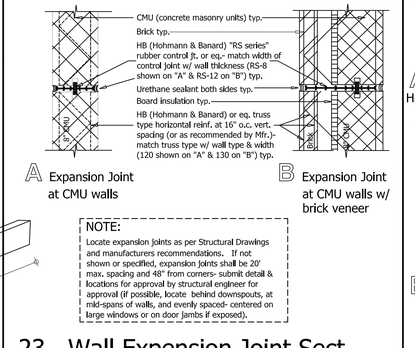

23. Wall Expension Joint Sect.

1"= 1'----------0"

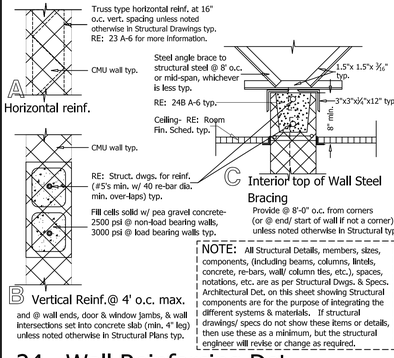

24. Wall Reinforcing Det.

1"= 1'----------0"

PROJECT:

Starr County Memorial Hospital

MRI Addition & Renovation

128 N. FM Road 3167 Rio Grande City, Texas

DESIGN GROUP INTERNATIONAL
DELFINO GARZA JR., • ARCHITECT • 1701 MIER STREET • LAREDO, TEXAS 78043 (956) 724-6268

REGISTERED ARCHITECT DELFINO GARZA JR. STATE OF TEXAS

DATE: 9-14-18
Registration Expiration Date: 6-30-19

The Texas Board of Architectural Examiners has jurisdiction over complaints regarding the professional practices of persons registered as architects in Texas.

Texas Board of Architectural Examiner P.O. Box 12337: Austin, Texas zip: 78711-2337 phone: (512) 305-8900

SHEET A-6.1
OF A-6

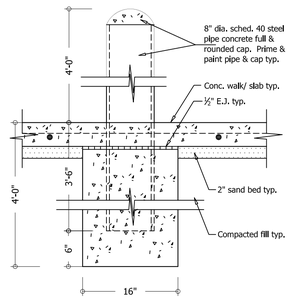

1. Bollard Det.
1" = 1'----------0"

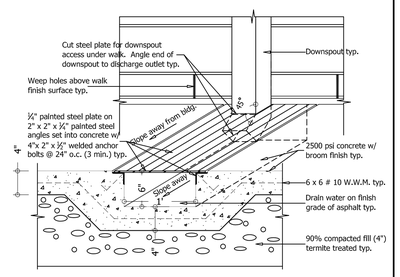

2. Under Walk Scupper Drainage
1"= 1'----------0"

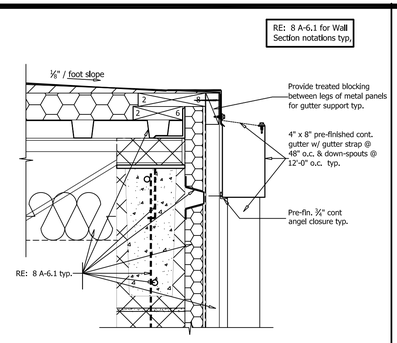

3. Roof Gutter Sect.
1 ½" = 1'----------0"

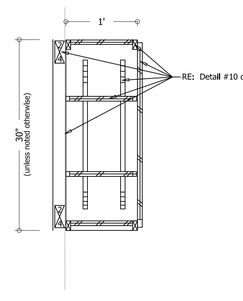

4. Wall Cabinet Section
1"= 1'----------0"

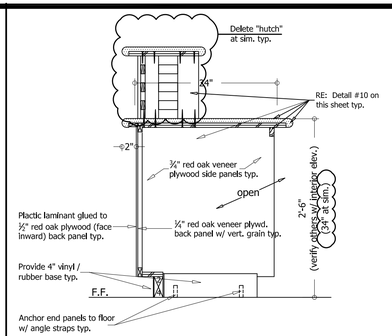

5. Base Cabinet Sect.- two sided, one open
1"= 1'----------0"

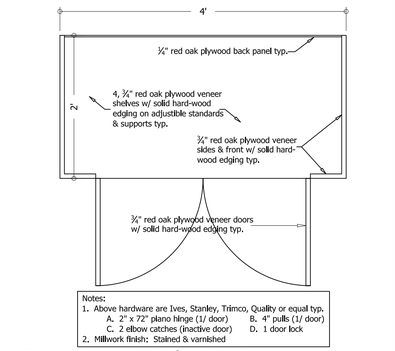

6. Storage Cabinet Sect.
1"= 1'----------0"

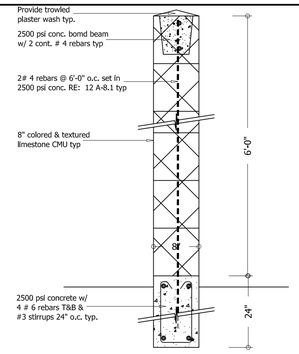

7. 8" CMU Fence Sect.
1" = 1'----------0"

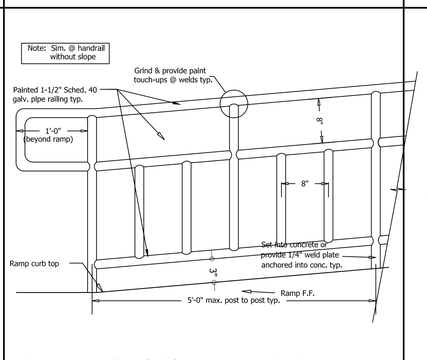

8. Handrail Elevation @ Ramp
1"= 1'----------0"

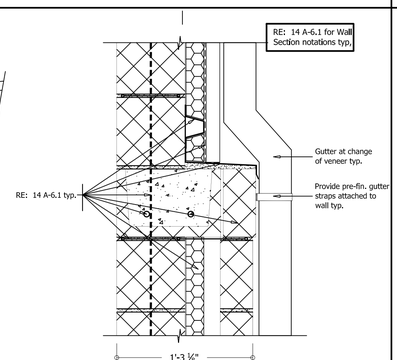

9. Wall Sect. at Masonry/ Metal
1 ½" = 1'----------0"

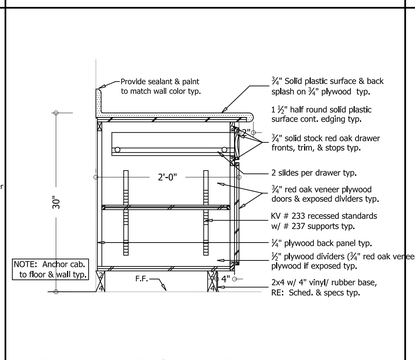

10. Base Cabinet Section
1"= 1'----------0"

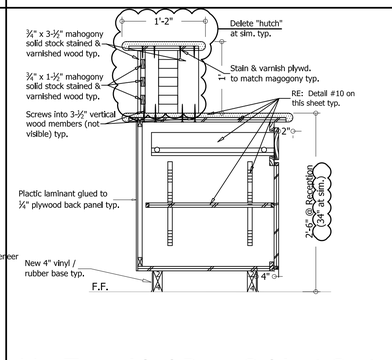

11. Two sided Base Cabinet Sect.
1"= 1'----------0"

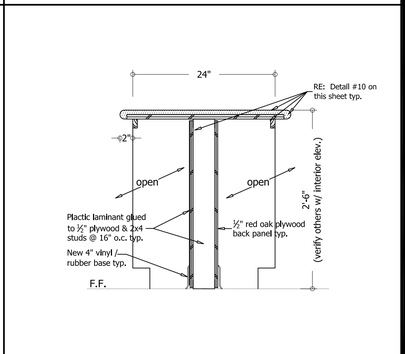

12. Base Cabinet Sect. @ H/C
1"= 1'----------0"

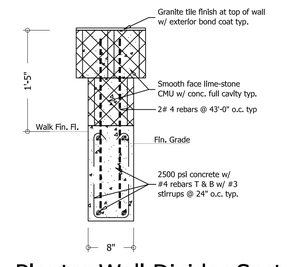

13. Planter Wall Divider Sect.
1"= 1'----------0"

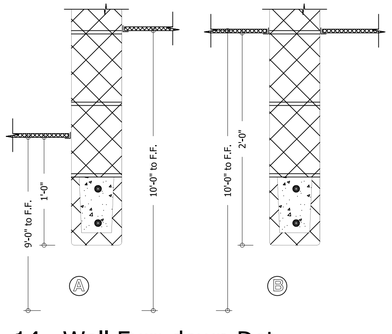

14. Wall Furr-down Det.
1"= 1'----------0"

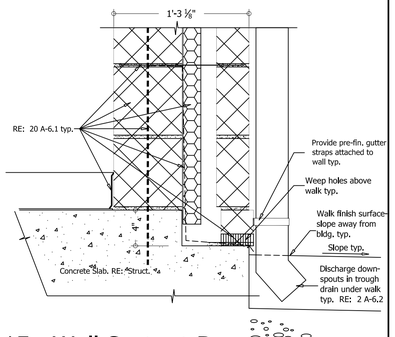

15. Wall Sect. at Base
1 ½" = 1'----------0"

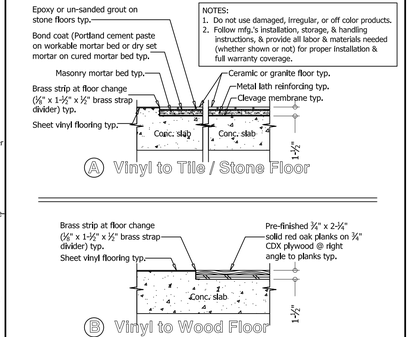

16. Drop Slab Det. @ Tile/ Wood Floors
1"= 1'----------0"

NOTES:
1. Do not use damaged, irregular, or off color products.
2. Follow mfg.'s installation, storage, & handling instructions, & provide all labor & materials needed (whether shown or not) for proper installation & full warranty coverage.

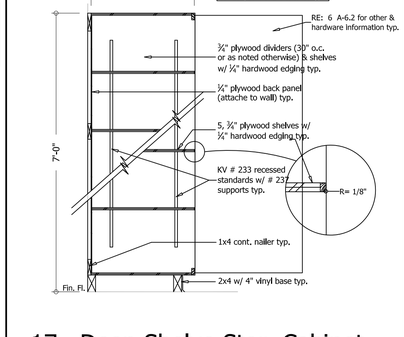

17. Deep Shelve Stor. Cabinet
1"= 1'----------0"

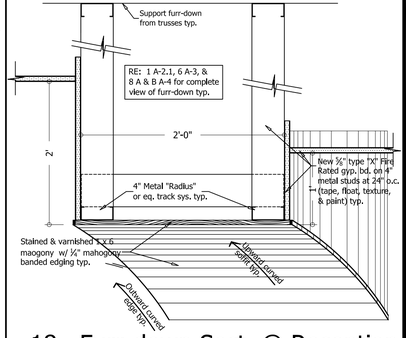

18. Furr-down Sect. @ Reception
1-½" = 1'----------0"

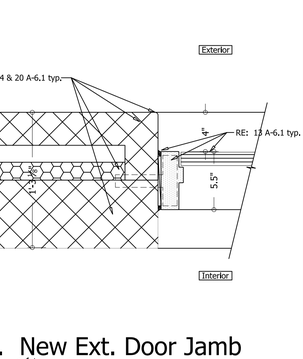

19. New Ext. Door Jamb
1 ½" = 1'----------0"

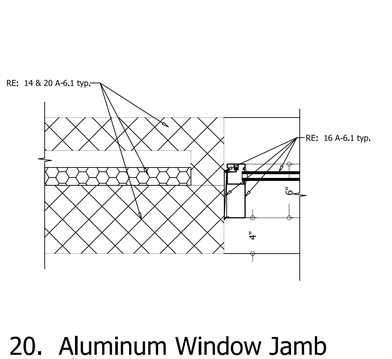

20. Aluminum Window Jamb
1-½"= 1'----------0"

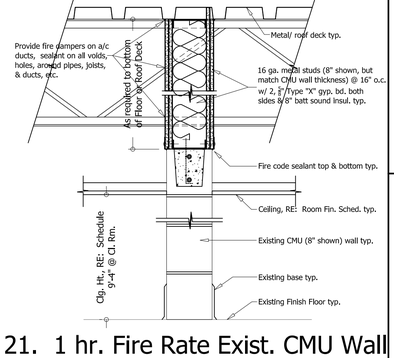

21. 1 hr. Fire Rate Exist. CMU Wall
1"= 1'----------0"

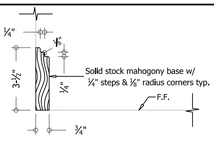

22. Wood Base Section
3"= 1'----------0"

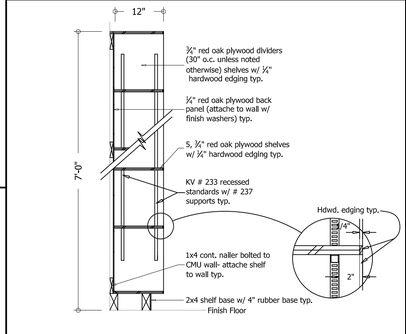

23. Shelf Sect.
¾" = 1'----------0"

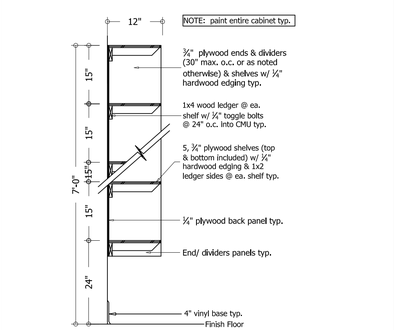

24. Shelf Sect. @ Jan.
¾" = 1'----------0"

PROJECT:
Starr County Memorial Hospital
MRI Addition & Renovation
128 N. FM Road 3167 Rio Grande City, Texas

DESIGN GROUP INTERNATIONAL
DELFINO GARZA JR., • ARCHITECT • 1701 MIER STREET • LAREDO, TEXAS 78043 (956) 724-6268

REGISTERED ARCHITECT DELFINO GARZA JR. STATE OF TEXAS

DATE: 9-14-18
Registration Expiration Date: 6-30-19

The Texas Board of Architectural Examiners has jurisdiction over complaints regarding the professional practices of persons registered as architects in Texas.

Texas Board of Architectural Examiners
P.O. Box 12337; Austin, Texas
zip: 78711-2337
phone: (512) 305-8900

SHEET A-6.2
OF A-6

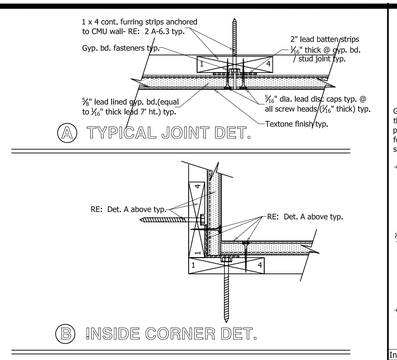

1. Lead Lined Gyp. Bd. Wall Det.
3" = 1'----------0"

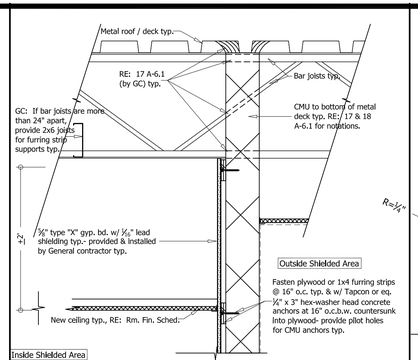

2. Lead Lined Wall Sect. (top)
1"= 1'----------0"

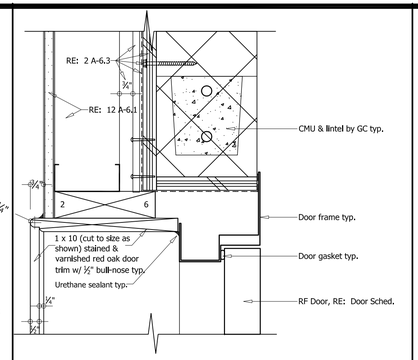

3. RF Shielded Door Head Sect.
3"= 1'----------0"

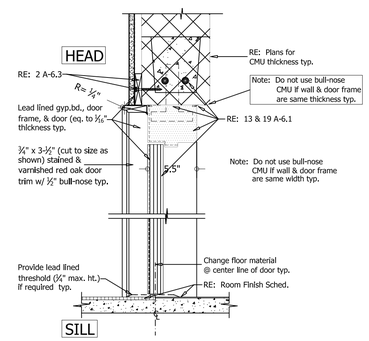

4. Lead Lined Door Det.
1 ½" = 1'----------0"

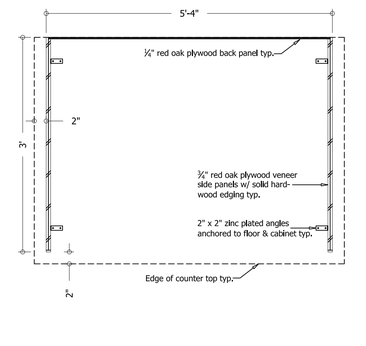

5. Plan for Wheelchair Storage
1"= 1'----------0"

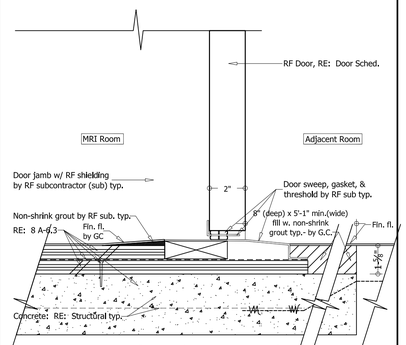

9. Threshold of RF Shielded Door
3"= 1'----------0"

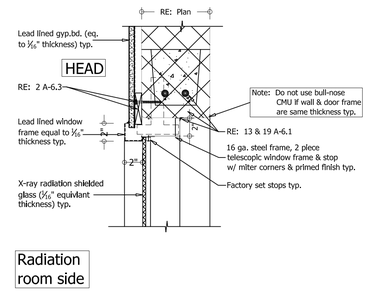

10. Lead Lined Window Det.
1 ½" = 1'----------0"

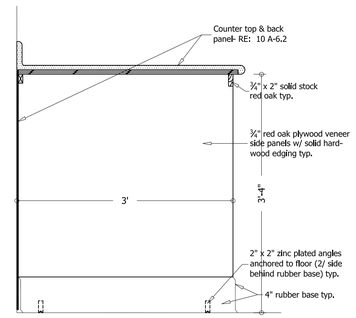

11. Wheelchair Storage Sect.
3"= 1'----------0"

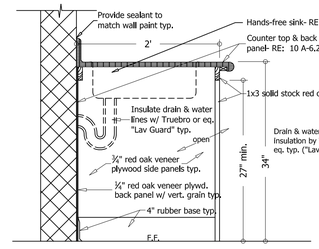

12. Countertop Lav Sect
1"= 1'----------0"

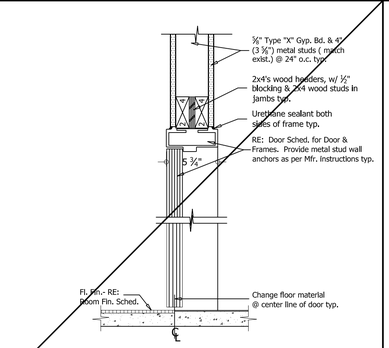

19. Int. RF Door Det.
1 ½" = 1'----------0"

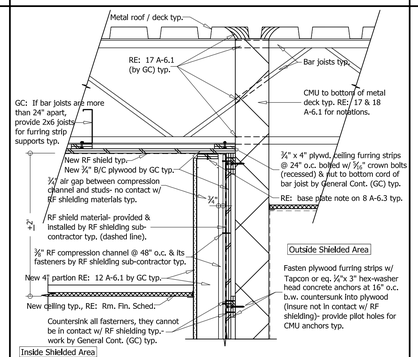

14. RF Shielding Wall Sect. (top)
1"= 1'----------0"

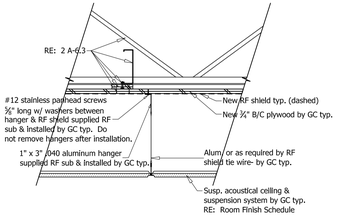

15. RF Shielded Ceiling Susp. Sys.
3"= 1'----------0"

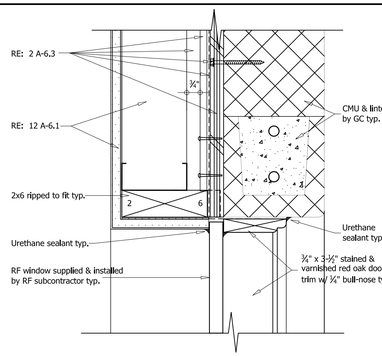

16. RF Shilded Window Det.
3" = 1'----------0"

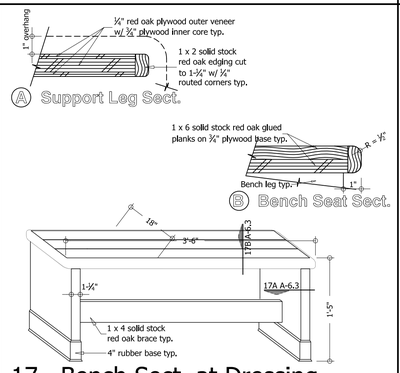

17. Bench Sect. at Dressing
1 ½" = 1'----------0"

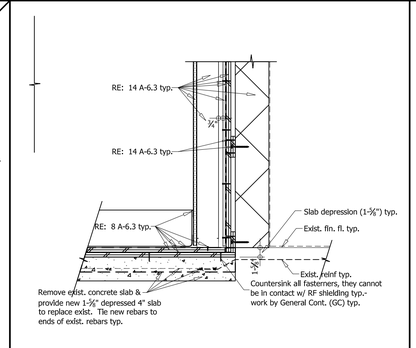

20. RF Shielding Wall Sect. (base)
1"= 1'----------0"

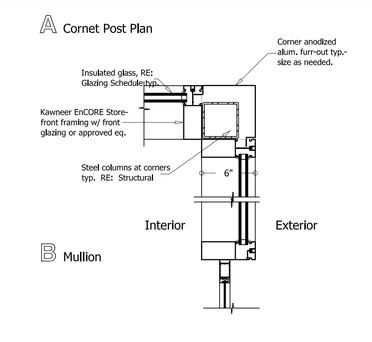

22. Vestibule Corner Det.
1-½" = 1'----------0"

PROJECT:
Starr County Memorial Hospital
MRI Addition & Renovation
128 N. FM Road 3167 Rio Grande City, Texas

DESIGN GROUP INTERNATIONAL
DELFINO GARZA JR., • ARCHITECT • 1701 MIER STREET • LAREDO, TEXAS 78043 (956) 724-6268

REGISTERED ARCHITECT DELFINO GARZA JR. STATE OF TEXAS

DATE: 9-14-18
Registration Expiration Date: 6-30-19
The Texas Board of Architectural Examiners has jurisdiction over complaints regarding the professional practices of persons registered as architects in Texas.
Texas Board of Architectural Examiners
P.O. Box 12337; Austin, Texas
zip: 78711-2337
phone: (512) 305-8900

SHEET A-6.3
OF A-6

GENERAL NOTES

GENERAL

1. THE STRUCTURE IS DESIGNED TO BE SELF-SUPPORTING AND STABLE AFTER THE BUILDING IS FULLY COMPLETED. IT IS SOLELY THE CONTRACTOR'S RESPONSIBILITY TO DETERMINE ERECTION PROCEDURE AND SEQUENCE AND TO INSURE THE SAFETY OF THE BUILDING AND ITS COMPONENT PARTS DURING ERECTION. THIS INCLUDES THE ADDITION OF WHATEVER SHORING, SHEETING, TEMPORARY BRACING, GUYS OR TIE DOWNS WHICH MIGHT BE NECESSARY. SUCH MATERIAL SHALL REMAIN THE CONTRACTOR'S PROPERTY AFTER THE COMPLETION OF THE PROJECT.
2. IT IS SOLELY THE CONTRACTOR'S RESPONSIBILITY TO FOLLOW ALL APPLICABLE SAFETY CODES AND REGULATIONS DURING ALL PHASES OF CONSTRUCTION.
3. EQUIPMENT FRAMING LOADS, OPENINGS AND STRUCTURE IN ANY WAY RELATED TO HVAC, PLUMBING, OR ELECTRICAL REQUIREMENTS ARE SHOWN FOR BIDDING PURPOSES ONLY. CONTRACTOR SHALL OBTAIN APPROVAL OF THE INVOLVED TRADES BEFORE PROCEEDING WITH SUCH PORTION OF THE WORK. EXCESS COST RELATED TO VARIATION IN THESE REQUIREMENTS TO BE BORNE BY THE APPROPRIATE CONTRACTOR.
4. SHOULD ANY OF THE DETAILED INSTRUCTIONS SHOWN ON THE PLANS CONFLICT WITH THESE STRUCTURAL NOTES, THE SPECIFICATIONS, OR WITH EACH OTHER, THE STRICTEST PROVISION SHALL GOVERN.
5. REFER TO THE ARCHITECTURAL, MECHANICAL ELECTRICAL AND PLUMBING FOR SLEEVES, CURBS, INSERTS, ETC. NOT SHOWN ON STRUCTURAL DRAWINGS.
6. THE CONTRACTOR SHALL BE RESPONSIBLE FOR COORDINATING THE WORK OF ALL TRADES AND SHALL CHECK ALL DIMENSIONS. ANY DISCREPANCIES SHALL BE CALLED TO THE ATTENTION OF THE ARCHITECT AND BE RESOLVED BEFORE PROCEEDING WITH ANY WORK.
7. THE CONTRACTOR SHALL BE SOLELY RESPONSIBLE FOR ALL EXCAVATION PROCEDURES INCLUDING LAGGING, SHORING AND PROTECTION OF ADJACENT PROPERTY, STRUCTURES, STREETS AND UTILITIES IN ACCORDANCE WITH ALL NATIONAL, STATE, AND LOCAL SAFETY ORDINANCES.
8. THE STRUCTURAL INTEGRITY OF ANY BUILDING RELIES ON THE FULL INTERACTION OF ALL ITS COMPONENT PARTS, WITH NO PROVISIONS MADE FOR CONDITIONS AND/OR SEQUENCES OF CONSTRUCTION AND THE STRUCTURAL DESIGN IS BASED ON THIS PREMISE. THEREFORE THE CONTRACTOR SHALL PROVIDE ADEQUATE BRACING OF SUPERSTRUCTURED DURING CONSTRUCTION.
9. CONTRACTOR SHALL BE RESPONSIBLE FOR RIGID BRACING OF ALL WALLS, FORMWORK, SHORING AND FALSE WORK DURING CONSTRUCTION.
10. CONTRACTOR SHALL VERIFY ALL DROPS, OFFSETS, BLOCKOUTS, FINISHES, AND DIMENSIONS. WITH ARCHITECTURAL PLANS PRIOR TO PROJECT LAYOUT.
11. THE USE OF REPRODUCTION OF THESE CONTRACT DRAWINGS BY ANY CONTRACTOR, ERECTOR, FABRICATOR OR MATERIAL SUPPLIER IN LIEU OF PREPARATION OF SHOP DRAWINGS SIGNIFIES HIS ACCEPTANCE OF ALL INFORMATION SHOWN HEREON AS CORRECT, AND OBLIGATES HIMSELF TO ANY JOB EXPENSE, REAL OR IMPLIED, DUE TO ANY ERRORS THAT MAY OCCUR.
12. CONTRACTOR IS RESPONSIBLE FOR ALL METHODS AND PROCEDURES DURING CONSTRUCTION. CONTRACTOR SHALL TAKE ALL NECCESSARY PRECAUTIONS TO MAINTAIN INTEGRITY OF STRUCTURE DURING CONSTRUCTION.
13. ALL MATERIAL AND WORKMANSHIP SHALL COMPLY WITH THE DRAWINGS, SPECIFICATIONS AND REFERENCE CODE.
14. STRUCTURAL MEMBERS HAVE BEEN LOCATED AND DESIGNED TO ACCOMMODATE THE MECHANICAL EQUIPMENT AND OPENINGS SPECIFIED BY THE MECHANICAL CONSULTANT. ANY SUBSTITUTIONS RESULTING IN REVISIONS TO THE STRUCTURE SHALL BE THE RESPONSIBILITY OF THE CONTRACTOR TO COORDINATE WITH THE STRUCTURAL ENGINEER.
15. THE GENERAL CONTRACTOR AND SUBCONTRACTORS SHALL DETERMINE THE SCOPE OF THE STRUCTURAL WORK FROM THE CONTRACT DOCUMENTS TAKEN AS A WHOLE INCLUDING ARCHITECTURAL AND MECHANICAL DRAWINGS. THE STRUCTURAL SHALL NOT BE CONSIDERED SEPARATELY FOR THE PURPOSES OF BIDDING THE STRUCTURAL WORK. CONTRACTOR SHALL REVIEW THE ENTIRE DRAWING PACKAGE IN ORDER TO DETERMINE THE SCOPE OF STRUCTURAL WORK INCLUDING NECCESSARY COORDINATION SHOWN IN OTHER CONSULTANT DRAWINGS.
16. NOTED SCALES ARE FOR INFORMATIONAL PURPOSES ONLY. CONTRACTOR SHALL NOT SCALE THE DRAWINGS FOR THE PURPOSE OF DETERMINING DIMENSIONAL INFORMATION.
17. ANY ALTERNATES ACCEPTED BY THE OWNER, GENERAL CONTRACTOR OF SUBCONTRACTOR SHALL BE THE RESPONSIBILITY OF THE GENERAL CONTRACTOR TO COORDINATE.
18. PRINCIPAL OPENINGS ARE INDICATED ON THE STRUCTURAL DRAWINGS. OTHER OPENINGS (SLEEVES, BLOCKOUTS, ETC.) ARE SHOWN IN THE ARCHITECTURAL AND MECHANICAL DRAWINGS. CONTRACTOR SHALL SUBMIT TO ARCHITECT AND ENGINEER A PLAN WITH ALL PROPOSED OPENINGS COORDINATED WITH ALL THE TRADES. ADDITIONAL REINFORCEMENT AND/OR STRUCTURAL MEMBERS MAY BE REQUIRED UPON REVIEW.

COORDINATION

1. ONLY LARGER SLEEVE OPENINGS AND FRAMED OPENINGS IN STRUCTURAL FRAMING COMPONENET MEMBERS ARE INDICATED ON THE STRUCTURAL DRAWINGS. HOWEVER, ALL SLEEVES, INSERTS AND OPENINGS, INCLUDING FRAMES AND/OR SLEEVES SHALL BE PROVIDED FOR PASSAGE, PROVISION AND/OR INCORPORATION OF THE WORK OF THE CONTRACT, INCLUDING BUT NOT LIMITED TO ARCHITECTURAL, MECHANICAL, ELECTRICAL AND PLUMBING WORK. THIS WORK SHALL INCLUDE THE COORDINATION OF SIZES, ALIGNMENT, DIMENSIONS, POSITION, LOCATIONS, ELEVATIONS AND GRADES AS REQUIRED TO SERVE THE INTENDED PURPOSE. OPENINGS NOT INDICATED ON THE STRUCTURAL DRAWINGS, BUT REQUIRED AS NOTED ABOVE, SHALL BE SUBMITTED TO THE ENGINEER FOR REVIEW.
2. REFER TO ARCHITECTURAL, MECHANICAL, ELECTRICAL AND PLUMBING DRAWINGS FOR FLOOR ELEVATIONS, SLOPES, DRAINS AND LOCATION OF DEPRESSED AND ELEVATED FLOOR AREAS.
3. COMPABILITY OF THE STRUCTURE AND PROVISIONS FOR BUILDING EQUIPMENT SUPPORTED ON OR FROM STRUCTURAL COMPONENTS SHALL BE VERIFIED AS TO SIZE, DIMENSIONS, CLEARANCES, ACCESSIBILITY, WEIGHTS AND REACTION WITH THE EQUIPMENT FOR WHICH THE STRUCTURE HAS BEEN DESIGNED PRIOR TO SUBMISSION OF SHOP DRAWINGS AND DATA FOR EACH PIECE OF EQUIPMENT AND FOR STRUCTURAL COMPONENTS. DIFFERENCES SHALL BE NOTED ON THE SUBMITTALS.
4. SHOP DRAWINGS SHALL BE PREPARED FOR ALL STRUCTURAL ITEMS AND SUBMITTED FOR REVIEW BY THE ENGINEER. CONTRACT DRAWINGS SHALL NOT BE REPRODUCED AND USED AS SHOP DRAWINGS. ALL ITEMS DEVIATING FROM THE CONTRACT DRAWINGS OR FROM PREVIOUSLY SUBMITTED SHOP DRAWINGS SHALL BE CLOUDED.
5. THE DETAILS DESIGNATED AS "TYPICAL DETAILS" APPLY GENERALLY TO THE DRAWINGS IN ALL AREAS WHERE CONDITIONS ARE SIMILAR TO THOSE DESCRIBED IN THE DETAILS.
6. THE DESIGN AND PROVISION OF ALL TEMPORARY SUPPORTS SUCH AS GUYS, BRACES, FALSEWORK, SUPPORTS AND ANCHORS FOR SAFETY LINES, CRIBBING, OR ANY OTHER TEMPORARY ELEMENTS REQUIRED FOR THE EXECUTION OF THE CONTRACT ARE NOT INCLUDED IN THESE DRAWINGS AND SHALL BE THE RESPONSIBILITY OF THE CONTRACTOR. TEMPORARY SUPPORTS SHALL NOT RESULT IN THE OVERSTRESS OR DAMAGE OF THE ELEMENTS TO BE BRACED NOR ANY ELEMENTS USED AS BRACE SUPPORTS.

CODES

1. BUILDING CODE: 2012 INTERNATIONAL BUILDING CODE WITH CITY OF RIO GRANDE CITY, TEXAS AMENDMENTS.
2. STRUCTURAL CONCRETE: BUILDING CODE REQUIREMENTS FOR REINFORCED CONCRETE, AMERICAN CONCRETE INSTITURE, ACI 318.
3. STRUCTURAL STEEL: MANUAL OF STEEL CONSTRUCTION, ALLOWABLE STRESS DESIGN, AMERICAN INSTITUTE OF STEEL CONSTRUCTION, NINITH EDITION.
4. ASCE 7-05

WELDING

1. REFERENCES:
   AWS D1.1-86 – "STRUCTURAL WELDING CODE – STEEL"
   AWS D1.3-81 – "STRUCTURAL WELDING CODE – SHEET STEEL"
2. ALL WELDING BY AWS QUALIFIED OPERATORS.

STRUCTURAL STEEL

1. MATERIALS:
   A. STRUCTURAL STEEL: W SECTIONS ASTM– A572 FY= 50 KSI
      HSS SECTIONS ASTM– A500 GRADE B
      ALL OTHER SECTIONS ASTM– A36
      HIGH STRENGTH BOLTS: ASTM A325 OR A490
      ANCHOR BOLTS: ASTM A307 OR A36:
      ELECTRODES: SERIES E70
      STRUCTURAL PIPES: ASTM A53 OR A501, FY = 35 KSI
      EXPANSION BOLTS: HILTI "KWIK BOLTS" OR APPROVED EQUAL.
2. SPECIFICATIONS: WELDING PERSONNEL AND PROCEDURES ARE TO BE QUALIFIED PER AWS D1.1. UNLESS SPECIFICALLY SHOWN OTHERWISE, DESIGN, FABRICATION AND ERECTION TO BE GOVERNED BY
   A. AISC SPECIFICATION FOR STRUCTURAL STEEL BUILDINGS (JUNE 1, 1989).
   B. AISC CODE OF STANDARD PRACTICE (SEPTEMBER 1, 1986).
   C. STRUCTURAL WELDING CODE, AWS D1.1–88 OF THE AMERICAN WELDING SOCIETY.
   D. SPECIFICATIONS FOR STRUCTURAL JOINTS USING ASTM A325 OR A490 BOLTS (NOVEMBER 13, 1985).
3. CONNECTIONS:
   A. CONNECTIONS TO BE DESIGNED BY THE FABRICATOR TO DEVELOP FULL STRENGTH OF MEMBER.
      FOLLOW INSTRUCTIONS ON DRAWINGS FOR GENERAL ARRANGEMENT OR PARTICULAR DETAILS. FIELD CONNECTIONS TO BE BOLTED. SHOP CONNECTIONS TO BE WELDED OR BOLTED.
   B. FULL PENETRATION AND PARTIAL PENETRATION FIELD WELDS IN MATERIAL OVER 5/16 INCH THICK SHALL BE SUBJECT TO NON–DESTRUCTIVE TESTING (OTHER THAN VISUAL INSPECTION) BY AN INDEPENDENT LABORATORY.
   C. ALL BOLTS IN BRACED FRAMES AND BOLTS IN SHEAR CONNECTIONS USED IN CONJUNCTION WITH FULL PENETRATION FLANGE WELDS SHALL BE SLIP CRITICAL (FRICTION) TYPE.
4. PAINT:
   A. DO NOT PAINT ANY STEEL WHICH WILL BE CONCEALED FROM VIEW. PAINT ALL VISIBLE STEEL GRAY.
5. GALVANIZING: ALL SHELF ANGLES, LINTELS IN EXTERIOR WALLS, AND ALL EXTERIOR STEEL EXPOSED TO THE ELEMENTS SHALL BE GALVANIZED.
6. MISCELLANEOUS:
   A. PROVIDE HOLES FOR OTHERS. IF OPENING IS NOT SHOWN ON THE STRUCTURAL DRAWINGS, OBTAIN PRIOR APPROVAL.
   B. STEEL SUPPORTING OR CONNECTED TO HVAC AND OTHER EQUIPMENT AND ROOF OPENINGS AS SHOWN ON THE DRAWINGS IS SHOWN FOR BIDDING PURPOSES ONLY. CONTRACTOR SHALL RECONCILE EXACT SIZE AND LOCATION BEFORE PROCEEDING WITH HIS WORK.
   C. GROUT UNDER BEARING PLATES, BASE PLATES, AND SETTING PLATES TO BE NON–SHRINKING TYPE.
   D. STEEL BELOW GRADE TO BE PROTECTED BY A MINIMUM OF 3 INCHES OF CONCRETE.
   E. PROVIDE 1/4 INCH THICK SETTING PLATES FOR ALL BEAMS BEARING ON MASONRY WHICH DO NOT REQUIRE A BEARING PLATE.
   F. PROVIDE SHOP WELDED ANCHORS FOR ATTACHMENTS OF MASONRY. SPACING TO BE 16 INCHES ON COLUMNS AND BEAMS.
   G. PROVIDE HEAVY WASHER AT ALL ANCHOR BOLTS.
   H. FINISH ENDS OF ALL COLUMNS, STIFFENERS AND ALL OTHER MEMBERS IN DIRECT BEARING.
   I. PROVIDE BOLT HOLES FOR JOISTS BOLTED TO BEAMS AND ATTACHMENT FOR JOINING EXTENDED JOIST BOTTOM CHORDS.
   J. MINIMUM BEAM BEARING ON MASONRY = 8 INCHES UNLESS NOTED OTHERWISE.
   L. EMBEDMENT LENGTH OF EXPANSION BOLTS INTO SOLID MASONRY OR CONCRETE SHALL BE AS FOLLOWS:
      1/2 INCH DIAMETER BOLTS ––– 3 1/2 INCHES EMBEDMENT
      3/4 INCH DIAMETER BOLTS ––– 5 INCHES EMBEDMENT
   M. PROVIDE 8000 LBS. OF RED IRON ALLOWANCE. ALLOWANCE SHALL INCLUDE THE COST OF LABOR.
   N. PROVIDE ADEQUATE AND APPROPRIATE STRUCTURAL STEEL FRAMING APPROVED BY THE ENGINEER, FOR THE SUPPORT AND MOUNTING OF MECHANICAL EQUIPMENT ESTING ON, OR SUSPENDED FROM, STEEL JOISTS, MAXIMUM WEIGHT TO BE HUNG OFF JOISTS BETWEEN "PANEL POINTS" (THE JUNCTURES OF CHORDS AND DIAGONAL WEB MEMBERS) IS 50 LBS. LOADS IN EXCESS OF 50 LBS. REQUIRED JOISTS TO BE MODIFIED OR STRENGTHENED TO CARRY SUCH LOADS.
   O. STEEL STAIRS TO BE DESIGNED AND DETAILED FOR LL=100 PSF BY STEEL FABRICATOR UNDER DIRECT SUPERVISION OF A REGISTERED PROFESSIONAL ENGINEER. SHOP DRAWINGS TO BE SIGNED AND SEALED BY THE SPECIALTY ENGINEER.
   P. QUALITY ASSURANCE:
      A) INSTALLER QUALIFICATIONS: A QUALIFIED INSTALLER SPECIALIZING IN PERFORMING THE WORK OF THIS SECTION WITH A MINIMUM 5 YEARS DOCUMENTED EXPERIENCE.
      B) FABRICATOR QUALIFICATIONS: A QUALIFIED FABRICATOR, SPECIALIZING IN PERFORMING THE WORK OF THIS SECTION WITH A MINIMUM OF 10 YEARS DOCUMENTED EXPERIENCE,THAT PARTICIPATES IN THE AISC QUALITY CERTIFICATION PROGRAM AND IS DESIGNATED AN AISC–CERTIFIED PLANT, CATEGORY STD.
      C) WELDING: QUALITY PROCEDURES AND PERSONNEL ACCORDING TO AWS D1.1, "STRUCTURAL WELDING CODE–STEEL."
   Q. STRUCTURAL FRAMING CONNECTIONS SHALL BE SEATED COLUMN CAPS, CLIP ANGLES WEB PLATES AS SHOWN ON DETAILS. USE A325 HIGH STRENGTH BOLTS OR WELDS SUFFICIENT TO DEVELOP REACTION CAPACITY SHOWN IN AISC MANUAL (9TH EDITION) AS THE ALLOWABLE UNIFORM LOAD/SPAN DIVIDED BY TWO AS SHOWN IN THE (9TH EDITION) OR THE MAXIMUM TOTAL UNIFORM LOAD/SPAN DIVIDED BY TWO AS SHOWN IN TABLES 3–6 THROUGH 3–9 OF THE 13TH EDITION (ASD).

STRUCTURAL STEEL CONNECTIONS

1. WELDING SHALL CONFORM TO ANSI/AWS DI.I, LATEST EDITION.
2. BOLTS SHALL CONFORM TO ASTM A325. BOLTS SHALL BE DESIGNED USING VALUES FOR BEARING TYPE BOLTS WITH THREAD ALLOWED IN THE SHEAR PLANE.
3. ANCHOR BOLTS SHALL BE: ASTM F1554 GR. 36
4. STRUCTURAL STEEL CONNECTION NOT SPECIFICALLY DETAILED ON THE DRAWINGS SHALL BE DESIGNED AND DETAILED BY THE CONTRACTOR UNDER THE DIRECT SUPERVISION OF A REGISTERED ENGINEER LICENSED IN THE STATE OF TEXAS. SEALED CALCULATIONS FOR ALL CONNECTIONS DESIGNED BY THE CONTRACTOR SHALL BE SUBMITTED FOR THE ARCHITECT'S FILES.
5. BEAM CONNECTIONS SHALL BE DESIGNED AND DETAILED AS FOLLOWS, UNLESS NOTED OTHERWISE ON THE DRAWINGS:
   A. CONNECTION SHALL BE AISC TYPE 2 SIMPLE FRAMING CONNECTIONS. SHEAR TAB CONNECTIONS SHALL NOT BE USED.
   B. IN GENERAL, SHOP CONNECTIONS SHALL BE BOLTED OR WELDED AND FIELD CONNECTIONS SHALL BE BOLTED.
   C. WHERE INDICATED, CONNECTIONS SHALL BE DESIGNED FOR THE SCHEDULED SHEAR FORCE, THE SHEAR FORCE INDICATED ON THE DRAWINGS AS "V=", AND THE HORIZONTAL FORCE INDICATED AS "H=".
   D. IF NOT INDICATED ON THE DRAWINGS, CONNECTIONS SHALL BE DESIGNED FOR 55 PERCENT OF THE TOTAL LOAD CAPACITY FOR THE BEAM SPAN SHOWN IN THE BEAM TABLES IN SECTION 2 OF THE AISC MANUAL, NINTH EDITION.
   E. THE MINIMUM NUMBER OF ROWS OF BOLTS SHALL BE 1/6 OF THE BEAM DEPTH WITH ANY FRACTION BE ROUDED TO THE NEXT HIGHER NUMBER.
   F. BOLTS SHALL BE "SNUG TIGHT", U.N.O.
   G. SHORT SLOTTED HOLES SHALL BE PERMITTED PROVIDED WASHERS ARE INSTALLED IN ACCORDANCE WITH AISC REQUIREMENTS. WASHERS SHALL BE HARDENED WHERE A325 BOLTS ARE UTILIZED.
6. WIND BRACE CONNECTION SHALL BE DESIGNED AND DETAILED AS FOLLOWS, UNLESS NOTED OTHERWISE ON THE DRAWINGS:
   A. CONNECTIONS SHALL BE WELDED.
   B. CONNECTIONS SHALL BE DESIGNED AND DETAILED FOR THE FORCES SHOWN ON THE DRAWINGS.
   C. IF FORCES ARE NOT INDICATED ON THE DRAWINGS, CONNECTIONS SHALL BE DESIGNED TO DEVELOP THE FULL TENSILE CAPACITY OF THE MEMBERS.
7. FOR CONNECTIONS NOT SPECIFICALLY ADDRESSED BY THESE NOTES OR THE DRAWINGS, PROVIDE FILLET WELDS AT ALL CONTACT SURFACES SUFFICIENT TO DEVELOP THE TENSILE STRENGTH OF THE SMALLER MEMBER AT THE JOINT.
8. MOMENT CONNECTIONS INDICATED ON DRAWINGS SHALL BE WELDED TO DEVELOP THE FULL CAPACITY OF THE MEMBER.
9. ROOF EDGE ANGLES SHALL BE CONTINOUS AND SHALL BE SPLICED ONLY AT SUPPORTS. SPLICES SHALL BE BUTT WELDED TO DEVELOP FULL CAPACITY OF THE MEMBER.
10. FILLET WELDS WITH NO SIZE SPECIFIED SHALL BE 3/16" OR MINIMUM SIZE REQUIRED BY AISC, WICHEVER IS LARGER.

DESIGN CRITERIA

1. FOUNDATION AND FRAMING DESIGN IS IN ACCORDANCE WITH THE INTERNATIONAL BUILDING CODE 2012.
2. GEOTECHNICAL REPORT:
   BY: MILLENNIUM ENGINEERS GROUP, INC.
   PROJ. NO.: 01–18–29106
   DATE: FEBRUARY 22, 2018
   MINIMUM DEPTH: 24"
   MINIMUM BEAM WIDTH: 12 INCHES
   BEARING CAPACITY (WIDENED BEAM FOOTINGS)..... 1.5 KSF
   BEARING CAPACITY (CONTINUOUS BEAM FOOTING)..... 1.5 KSF
   DESIGN PLASTICITY INDEX 20
   PVR (EXISTING) ..... 1" OR LESS
3. ROOF:
   DEAD LOAD: 25 PSF
   LIVE LOAD: 20 PSF
4. WIND:
   BASIC WIND SPEED (3 SEC. GUST): 140 MPH
5. IN ADDITION TO THE LOADS, IN ITEMS #3 & #4, DESIGN THE STEEL JOISTS WITH A 500 LB. CONCENTRATED LOAD AT THE END OF THE JOIST AND A 500 LB. CONCENTRATED LOAD AT MID SPAN OF THE JOIST. (THESE TWO LOADS DO NOT ACT CONCURRENTLY)

FOUNDATION NOTES

1. THE SITE SHALL BE PREPARED UNIFORM IN ACCORDANCE WITH SITE DRAWINGS, SPECIFICATIONS AND GEOTECHNICAL ENGINEERING STUDY PREPARED BY MILLENNIUM ENGINEER GROUP, INC., PHARR, TEXAS DCE PROJECT No. 01–18–29106 AND DATED FEBRUARY 22, 2018. PORTIONS OF THAT REPORT ARE REPRODUCED ABOVE. CONTRACTOR IS ADVISED TO REVIEW THE REPORT IN ITS ENTIRETY AND VISIT THE SITE PRIOR TO PROVIDING BID DOCUMENTS.
2. SUBGRADE MODIFICATIONS
   (SEE GEOTECH REPORT FOR COMPLETE RECOMMENDATIONS & REQUIREMENTS)

ITEM	DESCRIPTION
1.	SEE AND ADHERE TO THE SITE PREPARATION RECOMMENDATIONS SECTION OF THE GEOTECH REPORT.
2.	EXCAVATE EXISTING SOILS TO A DEPTH OF FOUR (4) FEET BELOW NATURAL GROUND ELEVATION IN ACCORDANCE WITH THE SITE PREPARATION RECOMMENDATIONS SECTION OF THE GEOTECH REPORT.
3.	CONDITION AND COMPACT TWELVE (12) INCHES OF SUBGRADE BELOW EXCAVATED SOILS IN ACCORDANCE WITH THE SITE PREPARATION RECOMMENDATIONS SECTION OF THE GEOTECH REPORT.
4.	PLACE SELECT FILL; (A MINIMUM OF FOUR (4) FEET BELOW THE BEARING ELEVATION OF THE CONCRETE SLAB) CONDITION AND COMPACT UP TO THE PROPOSED FFE IN ACCORDANCE WITH THE SELECT FILL RECOMMENDATIONS SECTION OF THE GEOTECH REPORT.

3. SELECT FILL, WHEN PROPERLY SLAKED AND TESTED BY STANDARD LABORATORY METHODS, SHALL MEET THE FOLLOWING REQUIREMENTS:
   a) LIQUID LIMIT SHALL BE LESS THAN OR EQUAL TO (SEE GEOTECH REPORT).
   b) PLASTICITY INDEX SHALL BE LESS THAN (SEE GEOTECH REPORT).
   c) SHALL CONTAIN NO ORGANIC MATERIAL.
   d) SHALL CONTAIN NO STONES LARGER THAN (SEE GEOTECH REPORT).
4. SAMPLES OF PROPOSED SELECT FILL SHALL BE FURNISHED TO THE TESTING LABORATORY 7 DAYS PRIOR TO INSTALLATION TO PERMIT TIME FOR SPECIFICATION COMPLIANCE INSPECTION AND APPROVAL.
5. SELECT FILL UNDER ALL FLOORS AND WALKS SHALL BE COMPACTED IN THE FIELD IN LIFTS NOT TO EXCEED 8" TO 95% (+5%) OF THE MAXIMUM DENSITY, AT –2% TO +2% OF THE OPTIMUM MOISTURE CONTENT, AS DETERMINED BY TEXAS HIGHWAY DEPARTMENT SOIL TESTING PROCEDURE TEX–113–E (COMPACTIVE EFFORT 6.63 FT.–LB./CU. IN.) FIELD DENSITIES SHALL BE CHECKED IN ACCORDANCE WITH TEX–115–E.

CONCRETE

1. ALL CONCRETE WORK SHALL CONFORM TO THE AMERICAN CONCRETE INSTITUTE SPECIFICATION, A.C.I. #301 AND BUILDING CODE REQUIREMENTS, A.C.I. #318, LATEST EDITION.
2. ALL DETAILING, FABRICATION AND ERECTION OF REINFORCING BARS, UNLESS OTHERWISE NOTED, MUST FOLLOW THE A.C.I. "MANUAL OF STANDARD PRACTICE FOR DETAILING REINFORCED CONCRETE", A.C.I. #315, LATEST EDITION.
3. CONCRETE SHALL HAVE A MINIMUM COMPRESSION STRENGTH AT 28 DAYS AS FOLLOWS:
   3000 PSI FOR ALL CONCRETE FOUNDATION COMPONENTS
   A MAXIMUM OF 20% FLYASH MAY BE USED IN CONCRETE MIX DESIGN AND SHALL CONFORM TO ASTM C618. THE WATER/CEMENT RATIO SHALL NOT EXCEED 0.58 AND SLUMPS SHALL BE BETWEEN 4 AND 5 INCHES. COORDINATE WITH OWNERS TESTING LABORATORY (IF ONE IS SELECTED) TO PROVIDE TESTING AS PER A.C.I.
4. REINFORCING BARS SHALL BE NEW BILLET STEEL CONFORMING TO ASTM A–615, GRADE 60.
5. STANDARD PROTECTIVE COVER OF REINFORCING BARS UNLESS OTHERWISE NOTED SHALL BE:
   WHERE CAST AGAINST DIRT OR FILL ..... 3 IN.
   EXPOSED TO EARTH OF WEATHER ..... 2 IN.
   COLUMNS ..... 1 1/2 IN.
   SLABS AND WALLS ..... 1 IN.
   OTHER ..... 1 1/2 IN.
6. ALL ACCESSORIES SHALL BE IN ACCORDANCE WITH THE A.C.I. "MANUAL OF STANDARD PRACTICE FOR DETAILING REINFORCED CONCRETE", A.C.I. #315 LATEST EDITION. ACCESSORIES FOR EXPOSED CONCRETE SOFFITS SHALL HAVE PLASTIC COATED FEET.
7. VERTICAL CONSTRUCTION JOINTS IN FLOOR OR ROOF SLABS ARE TO BE AS SHOWN ON PLANS. NO HORIZONTAL JOINTS WILL BE PERMITTED IN SLABS OR BEAMS UNLESS OTHERWISE NOTED.
8. MAINTAIN A MINIMUM OF ONE BAR DIAMETER (BUT NOT LESS THAN 1") BETWEEN ALL REINFORCING BARS (INCLUDING LAPS) ON ALL SLABS. MAINTAIN A MINIMUM OF 1–1/2" BETWEEN BARS IN COLUMNS, AND A MINIMUM OF 1–1/2" TIMES THE MAXIMUM COARSE AGGREGATE SIZE IN ALL CASES.
9. BARS SCHEDULED OR DETAILED "CONT." SHALL BE LAPPED 40 BAR DIAMETERS UNLESS OTHERWISE NOTED.
10. ALLOW FOR THE EQUIVALENT OF 5% OF REINFORCING FOR #4 BARS TO BE USED AS REQUIRED IN THE FIELD FOR SPECIAL CONDITIONS (LABOR FOR PLACING SAME TO BE INCLUDED).
11. AT CORNERS AND "T" INTERSECTIONS OF ALL FOUNDATION BEAMS, EXTEND 4 CORNER BARS EQUAL TO THE DETAILED STEEL IN THE ADJACENT BEAMS 2'–0" EACH WAY, 2 BARS TOP AND 2 BARS BOTTOM.
12. CONCRETE PLACED BY PUMPING SHALL MEET THE FOLLOWING REQUIREMENTS:
   a) COARSE AGGREGATE SHALL BE GRADED FROM A MAXIMUM OF 1" DOWN.
   b) MAXIMUM ALLOWABLE INCREASE IN CEMENT FACTOR SHALL BE 1/2 SACK PER CUBIC YARD OVER NORMAL MIX DESIGN.
   c) MAXIMUM WATER CEMENT RATIO SHALL BE 7–1/2 GALLONS PER SACK OF CEMENT. IF MORE WORKABILITY IS REQUIRED, AN ADMIXTURE MAY BE USED.
   d) MAXIMUM WEIGHT RATIO OF FINE AGGREGATES TO COARSE AGGREGATES SHALL NOT EXCEED 2/3.
   e) REFER TO A.C.I. #301, LATEST EDITION, SECTION 800, FOR OTHER PUMPING REQUIREMENTS.
   f) IN NO CASE SHALL CONCRETE BE PUMPED THROUGH AN ALUMINUM TUBE.
13. PROVIDE ADDITIONAL REINFORCING STEEL, IN STANDARD LENGTHS, FOR USE ON THE PROJECT AS DIRECTED BY THE STRUCTURAL ENGINEER FIELD REPRESENTATIVE.
   No. 4 – 500 LBS.
   No. 5 – 667 LBS.
   No. 6 – 667 LBS.

MATERIALS

A. SPECIFICATIONS: IN GENERAL, COMPLY WITH ACI 301–89 "SPECIFICATIONS FOR STRUCTURAL CONCRETE FOR BUILDINGS."
B. STRUCTURAL CONCRETE

CLASS	LOCATION	FC
I.	FOOTINGS	3000 PSI
II.	INTERIOR SLABS ON GRADE, AND ALL INTERIOR CONCRETE NOT OTHERWISE IDENTIFIED	4000 PSI
III.	PIERS PLACED INTEGRALLY WITH WALLS, EXTERIOR SLABS ON GRADE, AND ALL EXTERIOR CONCRETE (WITH AIR) NOT OTHERWISE IDENTIFIED	4000 PSI

C. ALL DEFORMED REINFORCING BARS (ASTM A 615): FY = 60,000
D. WELDED WIRE FABRIC SHALL CONFORM TO ASTM A165–85. (SHEET FORM, NOT ROLLED)

2. FIELD MANUAL: PROVIDE AT LEAST ONE COPY OF THE ACI FIELD REFERENCE MANUAL, SP–15, IN THE FIELD OFFICE AT ALL TIMES.
3. CONTINGENCIES:
   A. PROVIDE SUPPORTS AS REQUIRED TO MAINTAIN ALIGNMENT OF SCHEDULED REINFORCING. SUCH SUPPORTS ARE TO BE REFLECTED IN THE BID.
4. FOOTINGS:
   A. DOWELS IN FOOTINGS TO MATCH VERTICAL WALL REINFORCING.
   B. PROVIDE LEAN CONCRETE (CLASS IV) UNDER FOUNDATIONS FOR ACCIDENTAL OVER–EXCAVATION, SOFT SPOTS AND TRENCHES.
5. SPLICES: UNLESS NOTED OTHERWISE, MINIMUM LAP SPLICE LENGTHS TO BE AS FOLLOWS:
   A. VERTICAL BARS IN WALLS, PIERS, OR COLUMNS (INCLUDING DOWELS) 40 DIAMETER
   B. HORIZONTAL BARS IN SLABS & FOOTING 40 DIAMETER
   C. HORIZONTAL BARS IN WALL 48 DIAMETER
6. CONSTRUCTION JOINTS:
   A. CONSTRUCTION JOINTS PERMITTED ONLY WHERE SHOWN OR AS APPROVED BY THE STRUCTURAL ENGINEER. ALL CONSTRUCTION JOINTS ARE TO BE KEYED. KEYWAYS SHALL BE 1"–1/2 INCHES DEEP X 1/3 MEMBER THICKNESS.
7. CONCRETE COVER: UNLESS NOTED OTHERWISE, DETAIL REINFORCING TO PROVIDE CONCRETE COVER AS FOLLOWS:
   A. CONCRETE CAST AGAINST AND PERMANENTLY EXPOSED TO EARTH: 3 IN.
   B. CONCRETE EXPOSED TO EARTH OR WEATHER:
      #5 BARS AND SMALLER 1 1/2 IN.
      OTHERS 2 IN.
   C. CONCRETE NOT EXPOSED TO EARTH OR WEATHER:
      SLABS, WALLS, AND #11 BARS & SMALLER 1 IN.
      OTHERS 1 1/2 IN.

STEEL STUDS/JOIST

1. MATERIALS:
   A. STUDS AND TRACKS: 16 AND 18 GAGE STUDS: ASTM A446 GRADE D, Fy = 50 KSI.
2. SPECIFICATIONS: WELDING PERSONNEL AND PROCEDURES ARE TO BE QUALIFIED
3. PER AWS. DESIGN, FABRICATION AND ERECTION TO BE GOVERNED BY LATEST REVISIONS OF:
   A. AISC SPECIFICATION OF THE DESIGN OF COLD FORMED STEEL STRUCTURAL MEMBERS.
   B. STRUCTURAL WELDING CODE, AWS D1.3 OF THE AMERICAN WELDING SOCIETY.

   PROPERTIES:
   A. LIGHTGAGE FRAMING MEMBER SIZES INDICATED ON DRAWINGS SHALL MEET THE FOLLOWING MINIMUM REQUIREMENTS:

4.

MEMBER DESIGNATION	DEPTH	FLANGE WIDTH	GAGE	Ix(1N4)
18 GAGE	6"	1 5/8"	16	2.318
5. 18 GAGE	8"	1 5/8"	18	4.638
16 GAGE	10"	1 5/8"	16	9.95

   CONNECTIONS:
   A. ALL CONNECTIONS TO BE FIELD BOLTED.
   FINISH:
   A. ALL MATERIALS TO BE GALVANIZED COATED IN ACCORDANCE WITH ASTM A525 G–60.
   B. TOUCH UP FIELD WELDS WITH ZINC RICH PAINT.
6. MISCELLANEOUS:
   A. SUBMIT SHOP DRAWINGS FOR APPROVAL PRIOR TO FABRICATION.
   B. ALL STUDS USED FOR EXTERIOR WALL FRAMING SHALL BE 6" STEEL STUDS, MINIMUM 16 GAGE AT 24" O.C. MAXIMUM, U.N.O. ON PLAN.
   C. ALL STUD MEMBERS AND THEIR CONNECTIONS SHALL BE DESIGNED BY THE FABRICATOR FOR A HORIZONTAL WIND LOAD OF AS NOTED IN SECTION B. PROVIDE CALCULATIONS STAMPED BY A REGISTERED STRUCTRAL ENGINEER IN THE STATE OF NEW YORK
   D. DEFLECTION LIMIT = L/240 (EXCEPT L/360 AT INTERIOR PLASTER APPLIC

GENERAL NOTES

STRUCTURAL MASONRY (SPECIAL INSPECTION)

INSPECTION TASK	INSPECTION: CONTINUOUS DURING TASK LISTED	INSPECTION: PERIODICALLY DURING TASK LISTED
1. AS MASONSRY CONSTRUCTION BEGINS, THE FOLLOWING SHALL BE VERIFIED TO ENSURE COMPLIANCE:		
A. PROPORTIONS OF SITE PREPARED MORTAR.		X
B. CONSTRUCTION OF MORTAR JOINST.		X
C. LOCATION OF REINFORCEMENT AND CONNECTORS.		X
2. THE INSPECTION PROGRAM SHALL VERIFY:		
A. SIZE AND LOCATION OF STRUCTURAL ELEMENTS.		X
B. TYPE, SIZE AND LOCATION OF DOWELS, ANCHORS, INCLUDING OTHER DETAILS OF ANCHORAGE OF MASONRY TO OTHER DETAILS OF ANCHORAGE OF MASONRY TO STRUCTURAL MEMBERS, FRAMES AND OTHER CONSTRUCTION.		X
C. CHECK GROUT MIX FOR COMPLIANCE WITH CODE AND SPECIFICATIONS.		X
D. WELDING OF REINFORCING BARS.	X	
E. PROTECTION OF MASONRY DURING COLD WEATHER (TEMP. BELOW 40 °F) OR HOT.		X
F. WEATHER (TEMP. ABOVE 90 °F). CUTTING OF CLEAN OUT HOLES, KNOCKING DOWN OF FINS AND REMORAL OF DEBRIS.		
3. PRIOR TO GROUTING, THE FOLLOWING SHALL BE VERIFIED TO ENSURE COMPLIANCE:		
A. GROUT SPACE IS CLEAN.	X	
B. PLACEMENT OF REINFORCEMENT AND CONNECTOR.	X	
C. CHECK GROUT MIX FOR COMPLIANCE WITH CODE AND SPECIFICATIONS.	X	
D. CONSTRUCTION OF MORTAR JOINTS.	X	
E. CHECK INSTALLATION OF CLEAN OUT CLOSURE.	X	
4. GROUT PLACEMENT SHALL BE VERIFIED TO ENSURE COMPLIANCE WITH CODE AND CONSTRUCTION DOCUMENT PROVISIONS. (SUCH AS MECHANICAL VIBRATION DURING PLACEMENT AND LATER DURING RECONSOLIDATION.)	X	
5. PREPARATION OF ANY REQUIRED GROUT SPECIMENS, MORTAR SPECIMENS AND/OR PRISMS SHALL BE OBSERVED.	X	
6. COMPLIANCE WITH REQUIRED INSPECTION PROVISIONS OF THE PROVISIONS OF THE CONSTRUCTION DOCUMENTS AND THE APPROVED SUBMITTALS SHALL BE VERIFIED.	X	
7. CHECK THAT CURING REQUIREMENTS ARE BEING FOLLOWED.	X	
8. VERIFY PLACEMENT OF ANCHORS INTO CONCRETE MASONRY UNITS.	X	
9. FREQUENCY OF TESTS: A. CONCRETE MASONRY UNITS TEST – FOR EACH TYPE, CLASS, AND GRADE OF CONCRETE MASONRY UNIT INDICATED, TEST UNITS BY METHOD OF SAMPLING AND TESTING OF ASTM C140. ONE SET FOR CMU STANDARD PRISM TEST SHALL BE CONDUCTED FOR EVERY 5,000 SQ. FT. OF WALL DURING CONSTRUCTION IN ACCORDANCE TO ASTM C1314, BUT NOT LESS THAN ONE SET OF 3 MASONRY PRISMS FOR THE PROJECT.	X	
B. MORTAR TEST: FOR EACH TYPE INDICATED, TEST MORTAR BY METHODS OF SAMPLING AND TESTING OF ASTM C780. CONDUCT TESTS NO LESS FREQUENTLY THAN THAT REQUIRED TO EVALUATE MORTAR USED TO INSTALL EACH INCREMENT OF MASONRY UNITS INDICATED ABOVE FROM WHICH SAMPLES ARE TAKEN FOR TESTING. TEST MORTAR FOR EVERY 1,500 SQ. FT. OF WALL CONSTRUCTION.		
C. GROUT TEST: AT START OF GROUTING OPERATION, TAKE ONE TEST PER DAY FOR FIRST 3 DAYS. EACH GROUT TEST CONSISTS OF THREE SPECIMENS MADE IN ACCORDANCE WITH ASTM C1019. AFTER FIRST THREE TESTS, SPECIMENS FOR CONTINUING QUALITY CONTROL SHOULD BE TAKEN ONCE A WEEK FOR EVERY 25 CUBIC YARDS OF GROUT OR FOR EVERY 2,500 SQ. FT. OF WALL, WHICHEVER COMES FIRST.		
10. MASONRY TESTING REQUIREMENTS:	X	

TESTING METHOD OPTIONS	PRIOR TO CONSTRUCTION	DURING CONSTRUCTION
METHOD 1: MASONRY PRISM TESTING	5 PRISMS	3 PRISMS FOR EVERY 5,000 S.F. OF WALL
METHOD 2: MASONRY PRISM TESTING	APPROVED 30 PRISM RECORD	3 PRISMS FOR EVERY 5,000 S.F. OF WALL
METHOD 3: UNIT STRENGTH METHOD	UNITS AND GROUT OR 5 PRISM	UNITS AND GROUT OR 3 PRISMS FOR EVERY 5,000 S.F. OF WALL

MASONRY

1. MATERIALS:
   A. CONCRETE BLOCK: LIGHTWEIGHT ASTM C90 (HOLLOW) ASTM C145 (SOLID)
   B. MORTAR: ASTM C270 TYPE S, MINIMUM COMPRESSIVE STRENGTH: 1800 PSI (PROPERTY SPECIFICATIONS) MORTAR TITE AS MANUFACTURED BY ADDIMENT.
   C. GROUT: MINIMUM COMPRESSIVE STRENGTH: 3000 PSI
   D. BOND BEAM AND CORE FILL: ASTM C476, COARSE TYPE.
   E. JOINT REINFORCING: MILL GALVANIZED FINISH, 9 GAGE MINIMUM SIDE WIRES AND CROSS WIRES (LADUR TYPE) (DUR–O–WALL).
   F. BAR REINFORCING: ASTM A615, GRADE 60 (UNLESS NOTED OTHERWISE).

2. REINFORCED MASONRY, WHERE VERTICAL BARS ARE TO BE GROUTED INTO CORES, THE FOLLOWING REQUIREMENTS APPLY:
   A. PROVIDE DOWELS FROM WALL, SAME SIZE AND SPACING AS WALL BARS. LAP 48 DIAMETERS MINIMUM WITH WALL BAR.
   B. PROVIDE A CONTINUOUS VERTICAL CAVITY, AT LEAST 2" X 3" IN SIZE, FREE OF MORTAR DROPPINGS.
   C. PROVIDE REBAR ALIGNMENT DEVICES AT A MAXIMUM SPACING OF 96 BAR DIAMETERS (MINIMUM OF 2 PER BAR).
   D. AT SPLICES IN VERTICAL BARS, PROVIDE MECHANICAL COUPLERS OR 48 DIAMETER LAP.
   E. ALL REINFORCEMENT MUST BE INSTALLED AND SECURELY ANCHORED IN PLACE PRIOR TO PLACEMENT OF GROUT.
   F. MAXIMUM HEIGHT OF GROUT LIFT = 4'–0". UNLESS HIGH LIFT GROUTING PROCEDURES ARE EMPLOYED IN ACCORDANCE WITH ASI 530–99

3. MISCELLANEOUS:
   A. FILL CORE SOLID AROUND ANCHOR BOLTS.
   B. PROVIDE 100% SOLID BLOCKS OR SOLIDLY FILLED HOLLOW BLOCKS AT ALL EXPANSION BOLT LOCATIONS.
   C. SET WELD PLATES IN BOND BEAMS AFTER THE GROUT IS PLACED, BUT WHILE IT IS STILL PLASTIC.
   D. HOLLOW MASONRY UNITS TO BE LAID WITH FULL MORTAR COVERAGE ON HORIZONTAL AND VERTICAL FACE SHELLS. WEBS SHALL ALSO BE BEDDED IN ALL COURSES OF PIERS, COLUMNS, AND PILASTERS, AND IN THE STARTING COURSE ON FOOTINGS, AND WHEN ADJACENT TO CELLS OR CAVITIES TO BE REINFORCED OR FILLED WITH CONCRETE OR GROUT. SOLID UNITS TO BE LAID WITH FULL HEAD AND BED JOINTS.
   E. PROVIDE JOINT REINFORCING AT 16 INCHES, EXCEPT AS NOTED.
   F. LAP JOINT REINFORCING 6 INCHES FOR STANDARD, 15 INCHES FOR HEAVY WEIGHT.
   G. VERTICAL CONTROL JOINTS SHALL BE PROVIDED FULL HEIGHT OF MASONRY WALLS AS LOCATED ON THE DRAWINGS. THE JOINT SHALL BE PROVIDED AS A CONTINUOUS HEAD JOINT WITH MORTAR RAKED BACK 3/4" AT BOTH FACES AND 50% OF THE HORIZONTAL JOINT REINFORCING CUT AT THE JOINT. BOND BEAM REINFORCING AND GROUT SHALL CONTINUE THROUGH THE JOINT. AFTER THE MORTAR IS SET, THE JOINT SHALL BE CAULKED WITH A FLEXIBLE MASTIC.
   H. FILL ALL VOIDS AND CELLS WITHIN 12" EITHER SIDE OF CENTERLINE OF BEAM AND/OR COLUMN BEARING LOCATIONS WITH A #4 REINFORCING BAR AND GROUT U.N.O.
   I. ALL CMU WALLS MUST HAVE SPECIAL INSPECTION PER IBC CODE 2009 TABLE 1704.5.1 AND SECTION 1704.5.3 " MASONARY CONSTRUCTION" ON CHAPTER 17–"STRUCTURAL TEST & SPECIAL INSPECTION." THE CONTRACOR MUST PROVIDE REPORTS OF THESE "SPECIAL INSPECTIONS."
   J. UNLESS DETAILED OTHERWISE, TYPICAL VERTICAL REINFORCEMENT SHALL BE #5 AT 48" ON CENTER, AND TWO (2) #5 AT JAMBS OF ALL OPENINGS, THREE (3) #5 AT CORNERS, PROVIDE ADDITIONAL VERTICAL REINFORCEMENT FOR SPECIAL CONDITIONS AS DETAILED, ALL VERTICAL REINFORCEMENT TO BE IN CONCRETE OR GROUT FILLED CELLS, PROVIDE DOWELS FROM FOUNDATION, SAME SIZE AND SPACINGS.
   K. LAP SPLICES OF #6 AND SMALLER REINFORCING STEELS SHALL BE A MINIMUM OF 40 BAR DEAMETERS UNLESS OTHERWISE NOTED, LAP SPLICES OF #7 AND LARGER REINFORCING STEEL SHALL BE A MINIMUM OF 50 BAR DIAMETERS UNLESS OTHERWISE NOTED.
   L. TYPICAL HORIZONTAL REINFORCEMENT SHALL BE TWO (2) #5 CONTINUOUS IN 8"x16" DEEP CONTINUOUS CONCRETE FILLED BOND BEAM BELOW EACH FLOOR AND ROOF LEVEL, UNLESS NOTED OTHERWISE. PROVIDE STANDARD DUR–O–WALL TRUSS–TYPE REINFORCING OR REVIEWED EQUIVALENT EVERY OTHER COURSE (16" ON CENTER) AND AS PER MANUFACTURER'S RECOMMENDATIONS.
   M. ALL CELLS CONTAINING VERTICAL REINFORCEMENT SHALL BE FILLED SOLIDLY WITH PEA GRAVEL CONCRETE (3/8" MAX. AGGREGATE SIZE) OR GROUT, EACH WITH A MINIMUM COMPRESSIVE STRENGTH OF 3000 PSI AT 28 DAYS, GROUT OR CONCRETE SHALL BE A WORKABLE MIX SUITABLE FOR PUMPING WITHOUT SEGREGATION AND SHALL BE THROUGHLY MIXED, GROUT OR CINCRETE SHALL BE PLACE BY PUMPING OR AN APPROVED ALTERNATE METHOD AND SHALL BE PLACED BEFORE INITIAL SET OR HARDENING OCCURS. GROUTING SHALL BE PER NCHA TEK 3–2
   N. PROVIDE VERTICAL CONTROL JOINTS AT A MAXIMUM SPACING OF 25' (10') FROM CORNERS. DO NOT CONTINUE THE TYPICAL TRUSS TYPE JOINT REINFORCEMENT THROUGH THE JOINT. BOND BEAM REINFORCEMENT SHALL BE CONTINUOUS THROUGH THE JOINT.

4. SPECIAL INSPECTION IS REQUIRED ON ALL MASONRY WALLS PER IBC CODE 2012.

SPECIAL INSPECTIONS

1. THE CONTRACTOR SHALL EMPLOY ONE OR MORE SPECIAL INSPECTOR(S) (OR TESTING AGENCY) TO PROVIDE INSPECTIONS DURING CONSTRUCTION ON THE TYPES OF CONSTRUCTION LISTED ON THIS SECTION. THE SPECIAL INPECTOR SHALL BE A QUALIFIED PERSON WHO SHALL DEMONSTRATE COMPETENCE TO INSPECTIONS BEING PERFORM TO THE SATISFACTION OF THE ENGINEER OF RECORD AND BUILDING OFFICIAL. THE SPECIAL INSPECTOR SHALL HAVE EXPERIENCE WITH AT LEAST FIVE OTHER PROJECTS SIMILAR IN NATURE.
2. THE PURPOSE OF THE INSPECTION SHALL BE TO ENFORCE COMPLIANCE WITH THE CONSTRUCTION DRAWINGS, SPECIFICATIONS, GEOTECHNICAL REPORT AND THE 2012 INTERNATIONAL BUILDING CODE, SECTION 1704.
3. SPECIAL INPECTORS SHALL KEEP RECORD OF INSPECTIONS. THE SPECIAL INSPECTOR SHALL FURNISH SPECIAL REPORTS TO THE BUILDING OFFICIAL AND TO THE ENGINEER OF RECORD. REPORTS SHALL INDICATE THAT THE WORK INSPECTED WAS PREFROMED IN CONFORMANCE TO THE APPROVED CONSTRUCTION DOCUMENTS. DISCREPENCIES SHALL BE BROUGHT TO THE IMMEDIATE ATTENTION OF THE CONTRACTOR FOR CORRECTION. ANY CORRECTIONS THAT WERE NOT COMPLETED BY THE CONTRACTOR SHALL BE BROUGHT TO THE ATTENTION OF THE BUILDING OFFICIAL AND THE ENGINEER OF RECORD. IF DISCREPENCIES ARE NOT CORRECTED BY CONTRACTOR, SPECIAL INSPECTOR SHALL ISSUE A NOTIFICATION OF NONE/COMPLIANCE (NNC) TO ENGINEER.
4. THE SPECIAL INSPECTOR SHALL VERIFY THAT THE FABRICATOR MAINTAINS DETAIL FABRICATION AND QUALITY CONTROL PROCEDURES THAT PROVIDE A BASIS FOR SPECIAL CONTROL OF THE WORKMANSHIP. IF FABRICATOR IS ENROLLED IN A NATIONALLY ACCEPTED INSPECTION PROGRAM (SATISFACTORY TO ENGINEER AND BUILDING OFFICIAL), THIS IS NOT REQUIRED. ATTENTION OF THE CONTRACTOR FOR CORRECTION. ANY CORRECTIONS THAT WERE NOT COMPLETED BY THE CONTRACTOR SHALL BE BROUGHT TO THE ATTENTION OF THE BUILDING OFFICIAL AND ENGINEER OF RECORD.
5. EACH SPECIAL INSPECTOR IS RESPONSIBLE TO REVIEW THE PLANS THROUGHLY AND SUFFICIENTLY AHEAD OF CONSTRUCTION TO ESTABLISH IF HE CAN INSPECT THOSE ITEMS ENTRUSTED TO HIM. ALL AMBIGUITIES OR COMMISIONS IN THE APPROVED PLANS THAT CREATE A FORM OF DOUBT FOR THE SPECIAL INSPECTOR SHALL BE RESOLVED THROUGH THE PROPER CHANNELS PRIOR TO CONSTRUCTION,
6. A STRUCTURAL ENGINEER SHALL INSPECT THE CONCRETE FRAME INCLUDING BEARING WALLS, SHEAR WALLS, CONNECTIONS OF STRUCTURAL SLABS, TO SHEAR WALLS, ELEVATED SLABS, BEAMS, COLUMNS, MAT FOUNDATIONS AND PIER CAPS.
7. A GEOTECHNICAL STRUCTURAL ENGINEER SHOULD EXAMINE FOOTING EXCAVATION, PIER AND PIER CAP INSTALLATION, AND FILLED PLACEMENT TO DETERMINE THAT THE PROPER DESIGN REQUIREMENTS HAVE BEEN REACHED. THE INSPECTION SHOULD BE PERFORMED PRIOR TO THE PLACEMENT OF THE SLAB REINFORCEMENT IN THE EXCAVATION.
8. THE FOLLOWING ITEMS REQUIRE INSPECTION BY THE SPECIAL INSPECTOR.

STRUCTURAL/ REINFORCING STEEL REFERENCE STANDARD	FREQUENCY:	ITEMS TO INSPECTED:
HIGH STRENGTH BOLTING		
BEARING TYPE CONNECTIONS	PERIODIC	AISC–LRFD M2.5
SLIP CRITICAL CONNECTORS	CONTINUOUS	AISC–LRFD M2.5
WELDING OF STRUCTURAL STEEL		
FULL PENETRATION GROOVE WELDS	CONTINUOUS	AWS–D1.1
MULTI–PASS FILLET WELDS	CONTINUOUS	AWS–D1.1
SINGLE–PASS FILLET WELDS 5/16"	CONTINUOUS	AWS–D1.1
SINGLE–PASS FILLET WELDS 5/16"	PERIODIC	AWS–D1.1
FLOOR AND DECK WELDS	PERIODIC	AWS–D1.1
WELDING OF REINFORCING STEEL		
WELDABILITY OF STEEL, OTHER ASTM A706	PERIODIC	AWS–D1.4/ACI318 3.5.2
SHEAR REINFORCEMENT	CONTINUOUS	AWS–D1.4/ACI318 3.5.2
OTHER REINFORCEMENT	PERIODIC	AWS–D1.4/ACI318 3.5.2
INSPECTION OF STEEL FRAME AND JOISTS		
DETAILS SUCH AS BRACING AND STIFFENING	PERIODIC	CONTRACT DRAWINGS.
MEMBERS SIZES AND LOCATIONS	PERIODIC	CONTRACT DRAWINGS.
APPLICATION OF CONNECTION DETAILS	PERIODIC	CONTRACT DRAWINGS.
CONCRETE CONSTRUCTION		
REINFORCING STEEL	PERIODIC RANDOMLY AT 20%	IBC 1913.4 ACI318.3.5
CONCRETE MIX DESIGN	PERIOCIC EACH CONCRETE POUR	ACI 318.4, 5.2 5.4
SAMPLING OF FRESH CONCRETE	CONTINUOUS, PROVIDE A SET OF 4 FOR EVERY 75 CY OF BUT NOT LESS THAN 1 FOR 5,000 SF OF SLAB OR WALL SURFACE AREA. MONITOR SLUMP DEVIATIONS OF MORE THAN 1" FROM SPEC'D VALUE	ACI318 5.6,5.8 ASTM C172, C31 IBC 1913.10
MAINTENANCE OF SPECIFIED CURING TEMPS AND TECHNIQUES	PERIODIC EACH POUR	ACI 318 5.11 5.13 IBC 1913.9
INSPECTION OF CONCRETE PLACEMENT FOR PROPER APPLICATIONS TECHNIQUES	CONTINUOUS	ACI 318: 5.9, 5.10
INSPECTION OF MAINTAINANCE OF SPECIFIED CURING TEMPERATURE AND TECHNIQUES	PERIODIC	ACI: 5.11 5.13
DRILLED AND EPOXIED ANCHORS	EACH APPLICATION, ALL DRILLED AND EPOXIED ANCHORS (REBAR, BOLTS, THREADED RODS ETC.) SHALL BE PULL TESTED TO 110% OF THE ULT. BOND STRENGTH FOR NO LESS THAN 3 MIN.	
INSPECT FORMWORK FOR SHAPE, LOCATION AND DIMENSIONS	PERIODIC	ACI 318: 6.1.1
SOILS (SLAB–ON–GRADE)		
SUB–GRADE PREPARATION		
VISUAL OBSERVATIONS	PERIODIC	GEOTECHNICAL REPORT, BUILDING PAD GENERAL NOTES
PROOFROLLING OBSERVATIONS	CONTINUOUS	GEOTECHNICAL REPORT, BULDING PAD GENERAL NOTES
MOISTURE CONDITIONS & RECOMPACTION	CONTINUOUS OR PERIODIC, 1 DENSITY TEST FOR EACH	GEOTECHNICAL REPORT, BUILDING PAD GENERAL NOTES
DURING FILL PLACEMENT	CONTINUOUS OR PERIODIC	IBC 1704.7.3 GEOTECHNICAL REPORT; BUILDING PAD GENERAL NOTES

9. REFER TO SPECIFICATION SECTION 01411 SPECIAL INSPECTIONS IBC CHAPTER 17.
10. THE REGISTERED DESIGN PROFESSIONAL IN RESPONSIBLE CHARGE (RDPIRC) FOR THIS PROJECT IS THE ARCHITECT. SUBMIT ALL SPECIAL INSPECTION REPORTS DIRECTLY TO THE (RDPIRC) FOR REVIEW. ALSO SUBMIT THE STRUCTURALLY RELATED SPECIAL INSPECTION REPORTS TO THE STRUCTURAL ENGINEER FOR REVIEW.
11. THE GENERAL CONTRACTOR IS RESPONSIBLE FOR COORDINATING ALL TESTING, INSPECTIONS AND NOTIFYING THE ARCHITECT/ENGINEER AND SPECIAL INSPECTORS OF WORK READY FOR INSPECTION. THE GENERAL CONTRACTOR MUST PROVIDE ACCESS TO AND MEANS FOR PROPER INSPECTION OF SUCH WORK.
12. SPECIAL INSPECTIONS REQUIRED FOR THIS PROJECT:
    A)SOILS (SLAB–ON–GRADE) – 1704.7
    B)CMU CONSTRUCTION – 1704
    C)CONCRETE CONSTRUCTION (INCLUDING SLAB–ON–GRADE AND ALL WALL PANELS) – 1704.4 & 1704.10
    D)STRUCTURAL STEEL – 1704.3
    E)STEEL FABRICATORS – 1704.2
13. THE SPECIAL INSPECTIONS FOR THIS PROJECT WILL BE PROVIDED BY A FIRM DESIGNATED BY THE ARCHITECT.
14. THE RDPIRC IS RESPONSIBLE TO PREPARE, SIGN AND SUBMIT THE "FINAL REPORT OF REQUIRED INSPECTIONS" FOR SUBMITTAL TO THE CITY OF RIO GRANDE CITY AFTER GENERAL CONTRACTOR COMPLETES HIS WORK ACCORDING TO THE APPROVED PLANS.

SHOP DRAWINGS & SUBMITALS

1. SHOP DRAWINGS SHALL BE PREPARED AND SUBMITTED FOR REVIEW TO THE STRUCTURAL ENGINEER FOR EACH STRUCTURAL BUILDING MATERIAL AS INDICATED IN THE STRUCTURAL GENERAL NOTES AND THE CONTRACT SPECIFICATIONS. SEE THE CONTRACT SPECIFICATIONS FOR SUBMITTAL PROCEDURES AND ADDITIONAL INFORMATION.
2. SHOP DRAWINGS SHALL USE DRAFTING LINE WORK AND LETTERING THAT IS CLEARLY LEGIBLE. SHOP DRAWINGS SHALL NOT CONTAIN REPRODUCTIONS OF THE CONTRACT DRAWING PLANS OR DETAILS.
3. SHOP DRAWINGS SHALL NOT SHOW MATERIALS FOR MORE THAN ONE LEVEL OF THE SAME PLAN.
4. SHOP DRAWINGS SHALL SHOW CLEAR AND COMPLETE INFORMATION FOR THE FABRICATION (DETAIL SHEETS AND/OR MATERIAL LISTS) AND INSTALLATION.
5. ALLOW A MINIMUM OF (2) WEEKS FOR REVIEW OF EACH SET OF SHOP DRAWINGS.
6. CONTRACTOR SHALL REVIEW THE SHOP DRAWINGS SUBMITTED BY THE SUBCONTRACTOR AND COORDINATE SHOP DRAWINGS WITH ALL OTHER TRADING.
7. CONTRACTOR SHALL ANSWER ALL QUESTIONS OR CLARIFICATIONS BY THE SUBCONTRACTOR BEFORE SUBMITTING TO ENGINEER FOR REVIEW. ANY QUESTIONS THAT THE CONTRACTOR CANNOT ANSWER WITH THE INFORMATION ON THE DRAWINGS SHALL CLEARLY BE MARKED FOR THE ENGINEER FOR REVIEW.
8. CONTRACTOR IS RESPONSIBLE FOR VERIFYING ALL DIMENSIONS, SEE NOTE NUMBER 3 UNDER GENERAL NOTES.
9. REVIEW OF SHOP DRAWINGS BY THE ENGINEER IS FOR GENERAL CONFORMANCE TO THE STRUCTURAL DRAWINGS. APPROVAL OF THE SHOP DRAWINGS BY THE ENGINEER DOES NOT RELIEF THE CONTRACTOR FOR ANY ERRORS IN DIMENSIONS OR MATERIALS INDICATED ON THE SHOP DRAWINGS.
10. IF THERE IS ANY DISCREPANCY BETWEEN THE STRUCTURAL DRAWINGS AND SHOP DRAWINGS, THE INFORMATION SHOWN ON THE STRUCTURAL DRAWINGS GOVERN. INFORMATION THAT IS NOT INDICATED ON THE SHOP DRAWINGS SHALL BE OBTAINED FROM THE STRUCTURAL DRAWINGS.
11. PROVIDE SUBMITTALS FOR THE FOLLOWING ITEMS:
    A. CONCRETE MIX DESIGN
    B. CURING COMPOUND FOR CONCRETE
    C. REINFORCING STEEL
    D. STRUCTURAL STEEL
    E. METAL DECKING (INDICATE LAYOUT AND TYPES OF DECK PANELS, ANCHORAGE DETAILS, REINFORCING CHANNELS, PANS, DECK OPENINGS, SPECIAL JOINTING, ACCESSORIES, AND ATTACHMENTS TO OTHER CONSTRUCTION.)

STRUCTURAL OBSERVATIONS

1. JOB SITE OBSERVATIONS BY THE PROFESSIONAL ENGINEER OR HIS AUTHORIZED REPRESENTATIVE SHALL CONSIST OF VISUAL OBSERVATION OF MATERIALS, EQUIPMENT OR CONSTRUCTION WORK FOR THE PURPOSE OF ASCERTAINING THAT THE WORK IS IN SUBSTANTIAL CONFORMANCE WITH THE CONTRACT DOCUMENTS AND WITH THE DESIGN INTENT. SUCH OBSERVATIONS SHALL NOT BE RELIED UPON BY OTHERS AS ACCEPTANCE OF THE WORK, NOR SHALL IT BE CONSTRUED TO RELIEVE THE CONTRACTOR IN ANY WAY FROM HIS OBLIGATIONS AND RESPONSIBILITIES UNDER THE CONSTRUCTION CONTRACT. SPECIFICALLY BUT WITHOUT LIMITATION, OBSERVATIONS BY THE DESIGN PROFESSIONAL SHALL NOT REQUIRE THE DESIGN PROFESSIONAL TO ASSUME RESPONSIBILITY FOR THE MEANS AND METHODS OF CONSTRUCTION, NOR FOR SAFETY ON THE JOB SITE.
2. NOTIFY ENGINEER FOR THE FOLLOWING ITEMS:
   A. BEFORE PLACEMENT OF CONCRETE FOR SLAB/FOUNDATION
   B. BEFORE PLACEMENT OF FOUR (4) FEET OF GROUT IN CMU WALL
   C. AFTER FRAMING OF ROOF STRUCTURE BUT BEFORE PLACEMENT OF ROOFING MATERIAL.
3. NOTIFY ENGINEER 48 HOURS IN ADVANCE WHEN A STRUCTURAL OBSERVATION IS REQUIRED.

PROJECT:
Starr County Memorial Hospital
MRI Addition & Renovation
Rio Grande City, Texas

DESIGN GROUP INTERNATIONAL
DELFINO GARZA JR., • ARCHITECT • 1701 MIER STREET • LAREDO, TEXAS 78043 (956) 724-6268

9-11-18
STATE OF TEXAS
C. HINOJOSA, JR.
90636
LICENSED PROFESSIONAL ENGINEER

CLH ENGINEERING, INC.
TBPE FIRM No. F-8719
701 S. 15th STREET McALLEN, TX. 78501
(956) 687-5560 (956) 687-5561 FAX

SHEET
OF S1.1

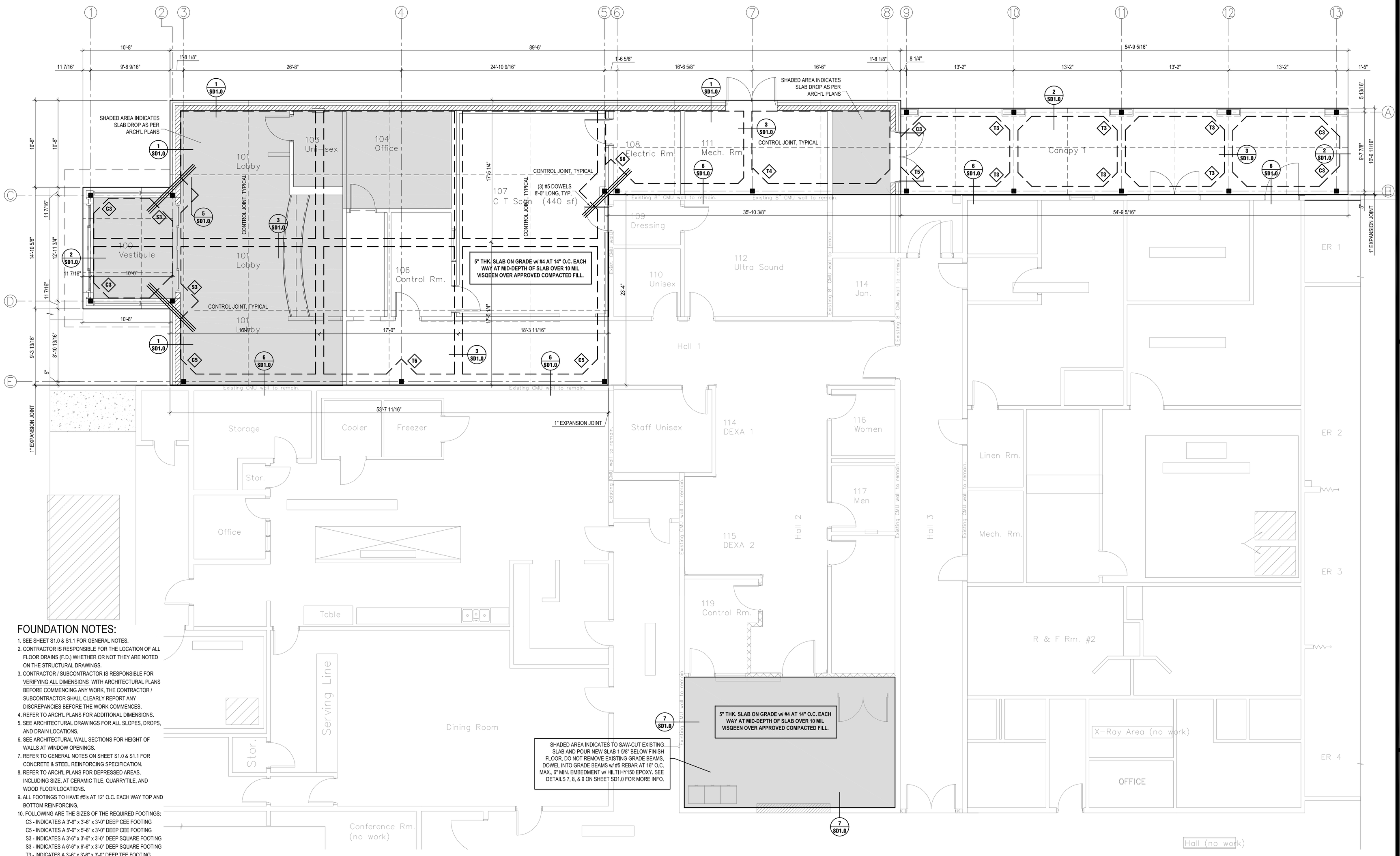

FOUNDATION NOTES:

1. SEE SHEET S1.0 & S1.1 FOR GENERAL NOTES.
2. CONTRACTOR IS RESPONSIBLE FOR THE LOCATION OF ALL FLOOR DRAINS (F.D.) WHETHER OR NOT THEY ARE NOTED ON THE STRUCTURAL DRAWINGS.
3. CONTRACTOR / SUBCONTRACTOR IS RESPONSIBLE FOR VERIFYING ALL DIMENSIONS WITH ARCHITECTURAL PLANS BEFORE COMMENCING ANY WORK, THE CONTRACTOR / SUBCONTRACTOR SHALL CLEARLY REPORT ANY DISCREPANCIES BEFORE THE WORK COMMENCES.
4. REFER TO ARCH'L PLANS FOR ADDITIONAL DIMENSIONS.
5. SEE ARCHITECTURAL DRAWINGS FOR ALL SLOPES, DROPS, AND DRAIN LOCATIONS.
6. SEE ARCHITECTURAL WALL SECTIONS FOR HEIGHT OF WALLS AT WINDOW OPENINGS.
7. REFER TO GENERAL NOTES ON SHEET S1.0 & S1.1 FOR CONCRETE & STEEL REINFORCING SPECIFICATION.
8. REFER TO ARCH'L PLANS FOR DEPRESSED AREAS, INCLUDING SIZE, AT CERAMIC TILE, QUARRYTILE, AND WOOD FLOOR LOCATIONS.
9. ALL FOOTINGS TO HAVE #5's AT 12" O.C. EACH WAY TOP AND BOTTOM REINFORCING.
10. FOLLOWING ARE THE SIZES OF THE REQUIRED FOOTINGS:
    - C3 - INDICATES A 3'-6" x 3'-6" x 3'-0" DEEP CEE FOOTING
    - C5 - INDICATES A 5'-6" x 5'-6" x 3'-0" DEEP CEE FOOTING
    - S3 - INDICATES A 3'-6" x 3'-6" x 3'-0" DEEP SQUARE FOOTING
    - S3 - INDICATES A 6'-6" x 6'-6" x 3'-0" DEEP SQUARE FOOTING
    - T3 - INDICATES A 3'-6" x 3'-6" x 3'-0" DEEP TEE FOOTING
    - T4 - INDICATES A 4'-6" x 4'-6" x 3'-0" DEEP TEE FOOTING
    - T5 - INDICATES A 5'-6" x 5'-6" x 3'-0" DEEP TEE FOOTING
    - T6 - INDICATES A 6'-6" x 6'-6" x 3'-0" DEEP TEE FOOTING

1 FOUNDATION PLAN
SCALE: 3/16"=1'-0"

PROJECT:
Starr County Memorial Hospital
MRI Addition & Renovation
Rio Grande City, Texas

DESIGN GROUP INTERNATIONAL
DELFINO GARZA JR., • ARCHITECT • 1701 MIER STREET • LAREDO, TEXAS 78043 (956) 724-6268

9-11-18
STATE OF TEXAS
C. HINOJOSA, JR.
90636
LICENSED
PROFESSIONAL ENGINEER

CLH ENGINEERING, INC.
TBPE FIRM No. F-8719
701 S. 15th STREET McALLEN, TX. 78501
(956) 687-5560 (956) 687-5561 FAX

SHEET S2.0
OF

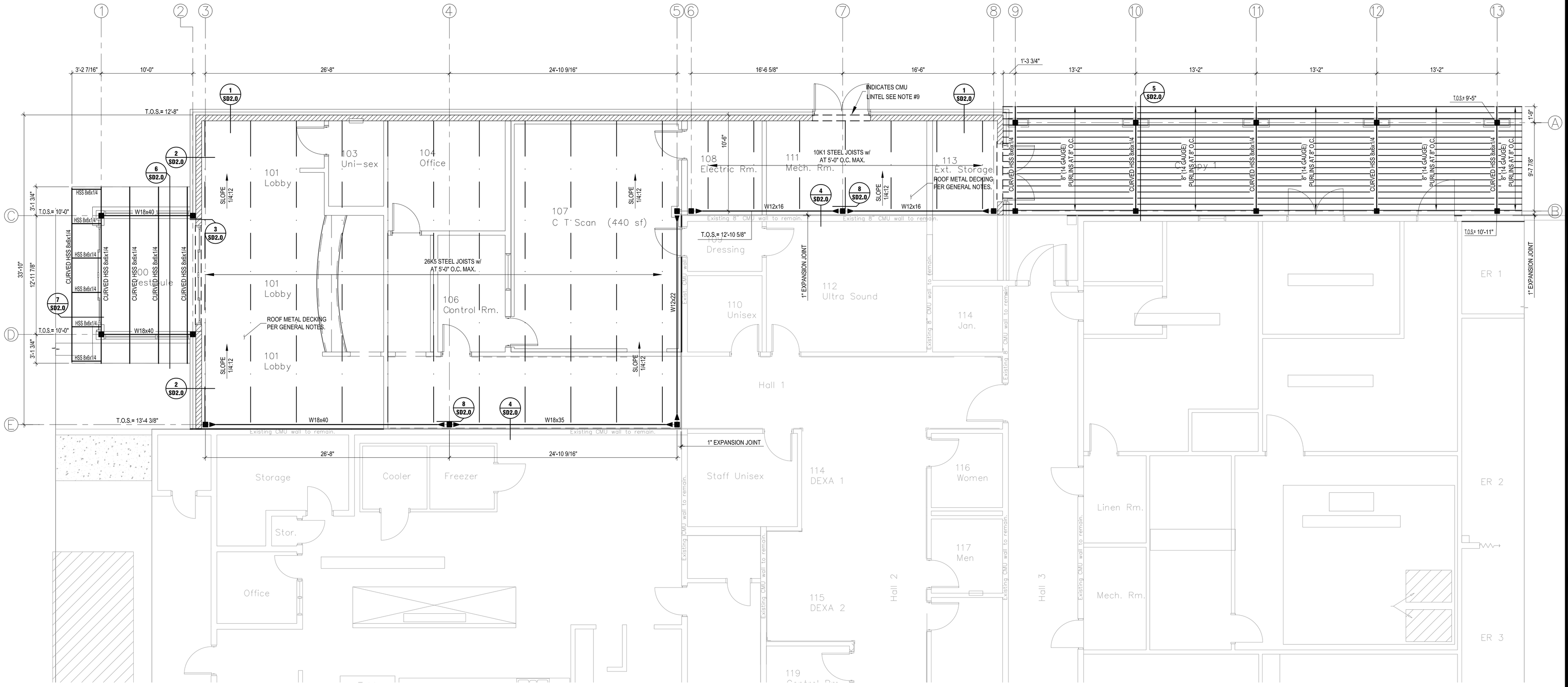

FRAMING NOTES:

1. SEE SHEET S1.0 & S1.1 FOR FRAMING GENERAL NOTES.
2. SEE SHEET SD2.0 & SD2.1 FOR FRAMING DETAILS & TYPICAL DETAILS.
3. DESIGN JOISTS UNDER UNITS WITH LOADS INDICATED ON THE DRAWINGS AND DESIGN CRITERIA JOIST MANUFACTURER TO PROVIDE JOIST SIZE (MAX. JOIST DEPTH TO BE AS SHOWN ON PLANS) DESIGN JOIST FOR ∆/600. (MECHANICAL WEIGHT+DEAD LOAD ONLY) COORDINATE OPENINGS WITH MECHANICAL PLANS.
4. JOIST UNDER THE PROPOSED LOCATION OF MECHANICAL UNIT MAY BE DOUBLE UP, IF JOIST SUPPLIER APPROVES LOADING REQUIREMENTS.
5. FOR OPENING IN ROOF AND AT MECHANICAL UNITS, SEE DETAIL 2/SD2.1
6. ALL COLUMNS SHALL BE HSS 6x6x1/4, U.N.O.
7. JOIST SUPPLIER TO PROVIDE HORIZONTAL AND/OR DIAGONAL BRIDGING PER CODE.
8. ▨ INDICATES 8" LOAD BEARING CMU WALL w/ #5's (V) AT 32" O.C. , U.N.O.
9. ═ ═ ═ INDICATES CMU LINTEL, SEE DETAIL 1/SD2.1 FOR SIZE AND STEEL REINFORCING.
10. MECHANICAL UNITS MUST BE SUPPORTED BY A MINIMUM OF 3 JOISTS.
11. TYPICAL BRIDGING PER STEEL JOIST MANUFACTURER:
    HORIZONTAL 1" x 1" x 7/64"
    DIAGONAL - 1½" x 1½" x 7/64"
12. ►═ INDICATES MOMENT CONNECTION SEE DETAIL 8/SD2.0

ALL CMU WALLS CONSTRUCTION REQUIRES SPECIAL INSPECTION PER IBC CODE 2012 TABLE 1704.5.1 AND SECTION 1704.5.3 TESTING AGENCY MUST PROVIDE REPORTS TO ARCHITECT & ENGINEER.

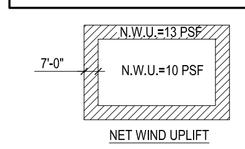

NET WIND UPLIFT

1 ROOF FRAMING PLAN
SCALE: 3/16"=1'-0"

PROJECT:
Starr County Memorial Hospital
MRI Addition & Renovation
Rio Grande City, Texas

DESIGN GROUP INTERNATIONAL
DELFINO GARZA JR., • ARCHITECT • 1701 MIER STREET • LAREDO, TEXAS 78043 (956) 724-6268

9-11-18
STATE OF TEXAS
C. HINOJOSA, JR.
90636
LICENSED PROFESSIONAL ENGINEER

CLH ENGINEERING, INC.
TBPE FIRM No. F-8719
701 S. 15th STREET McALLEN, TX. 78501
(956) 687-5560 (956) 687-5561 FAX

SHEET
S3.0
OF

DIAMETER OF BENDS	
STIRRUPS AND TIES	4 db FOR #3 THRU #5 BARS
	6 db FOR #6 THRU #8 BARS
ALL OTHERS	6 db FOR #3 THRU #8 BARS
	8 db FOR #9 THRU #11 BARS
	10 db FOR #14 THRU #18 BARS

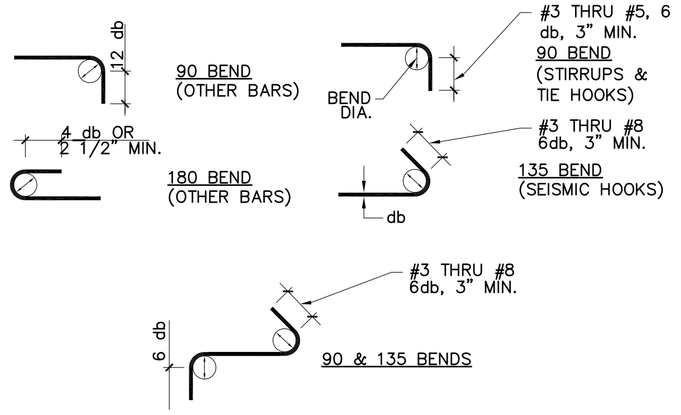

11 STANDARD HOOKS
SCALE: NOT TO SCALE

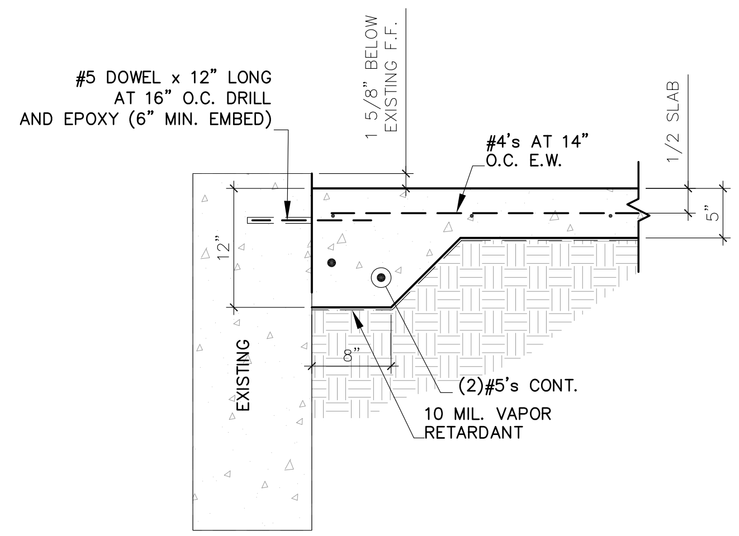

7 NEW SLAB SECTION
SCALE: NOT TO SCALE

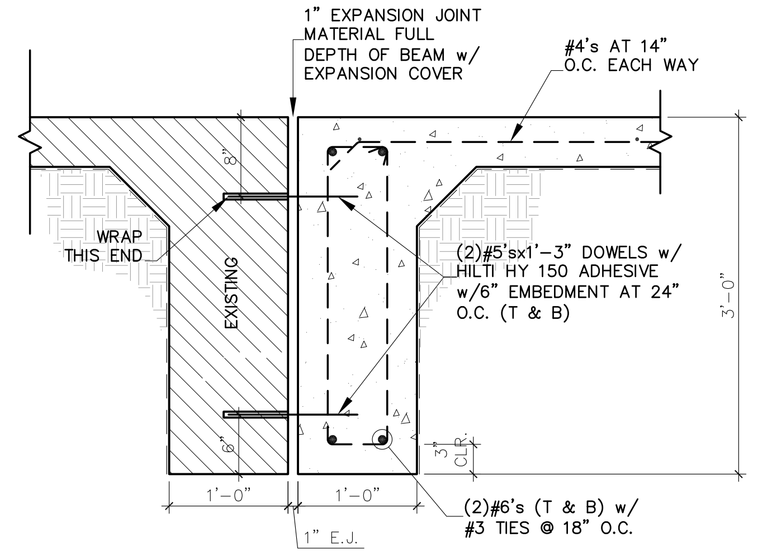

4 EXPASION JOINT
SCALE: NOT TO SCALE

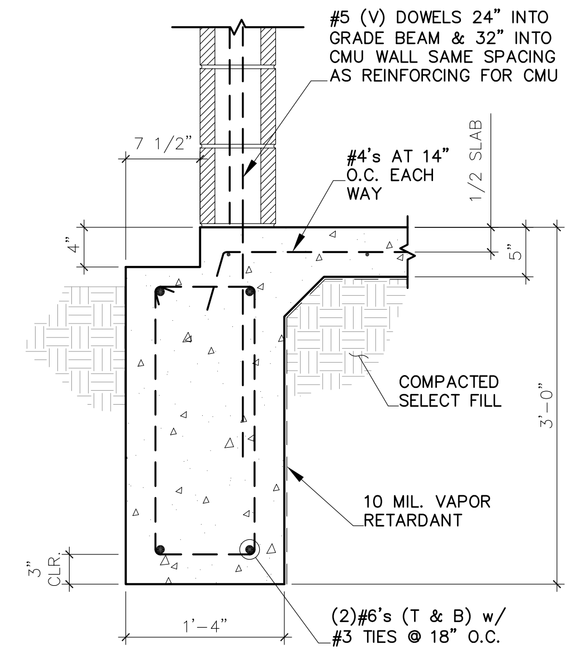

1 EXTERIOR GRADE BEAM
SCALE: NOT TO SCALE

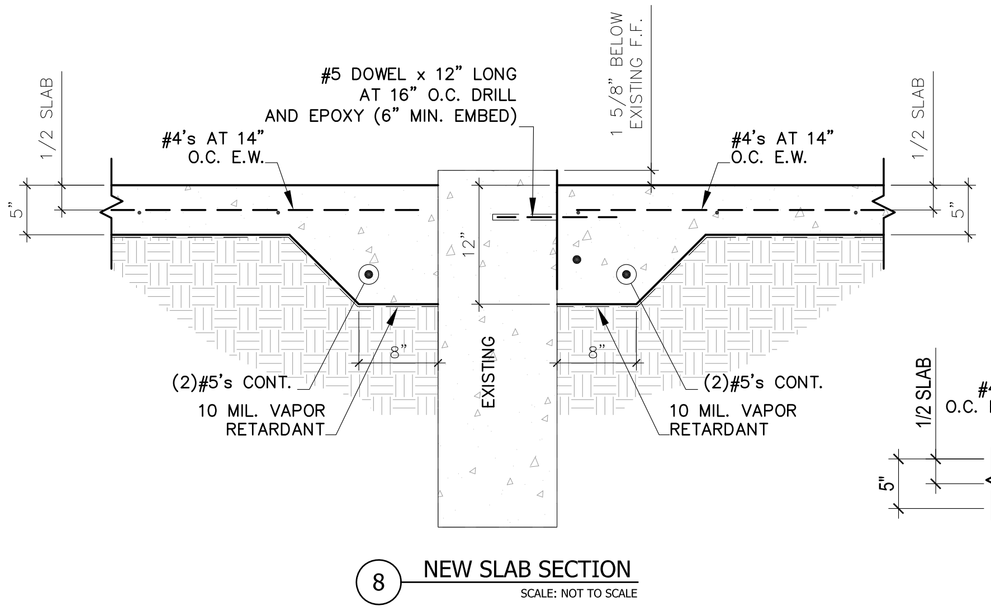

8 NEW SLAB SECTION
SCALE: NOT TO SCALE

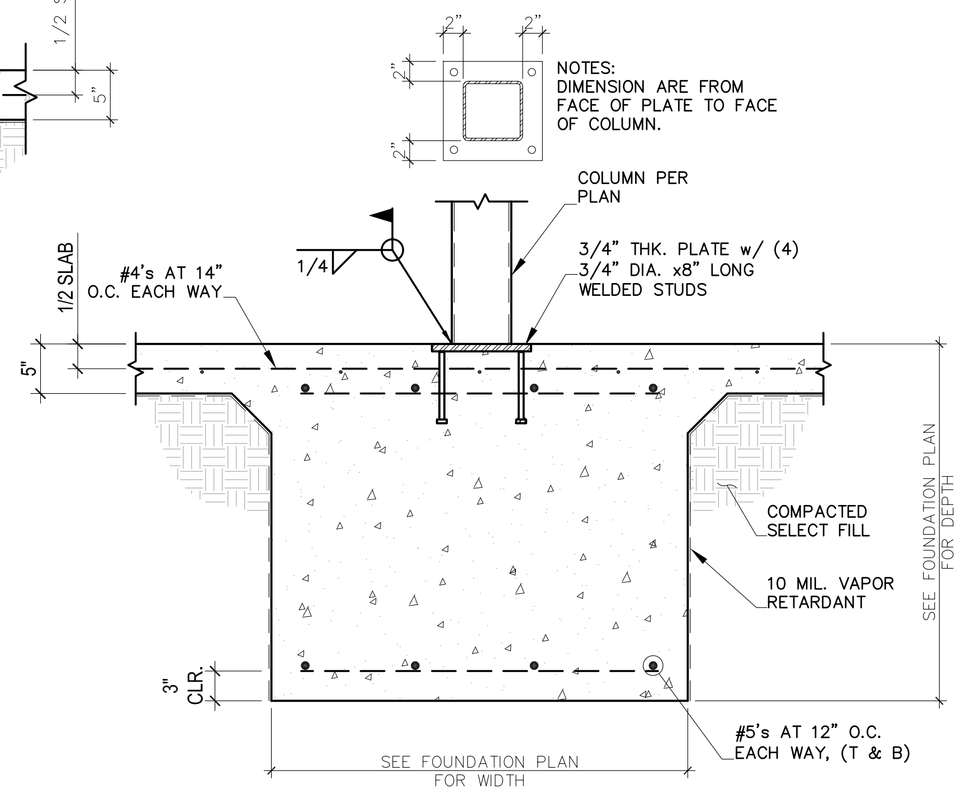

5 FOOTING AT COLUMN
SCALE: NOT TO SCALE

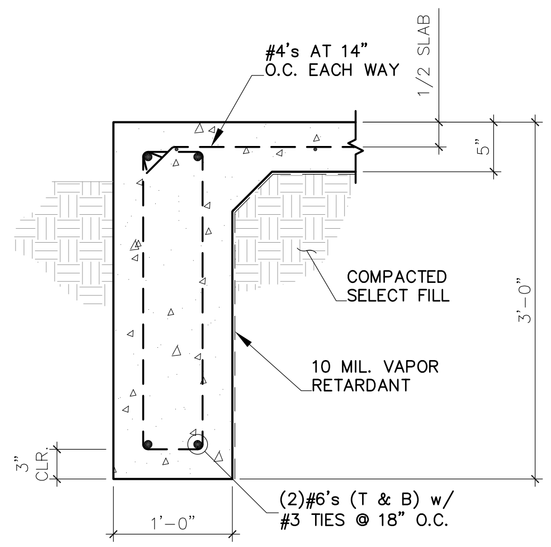

2 EXTERIOR GRADE BEAM
SCALE: NOT TO SCALE

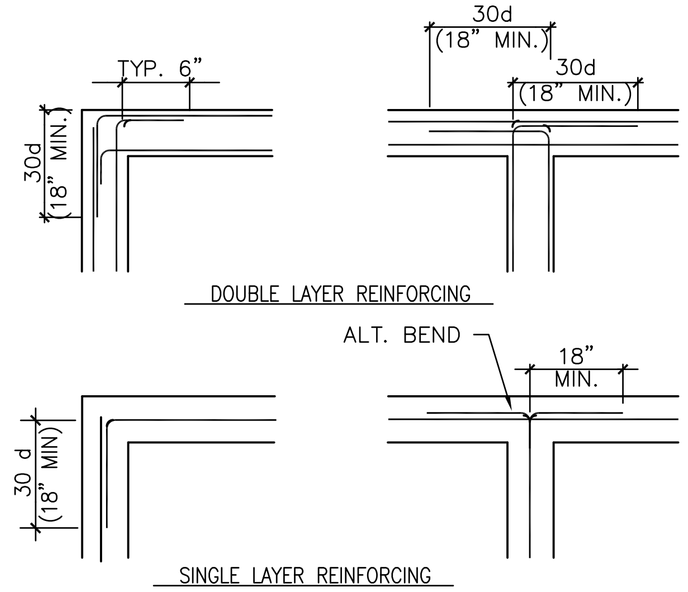

12 TYP. REINF. @ INT. OF CONC. FTG'S.
SCALE: NOT TO SCALE

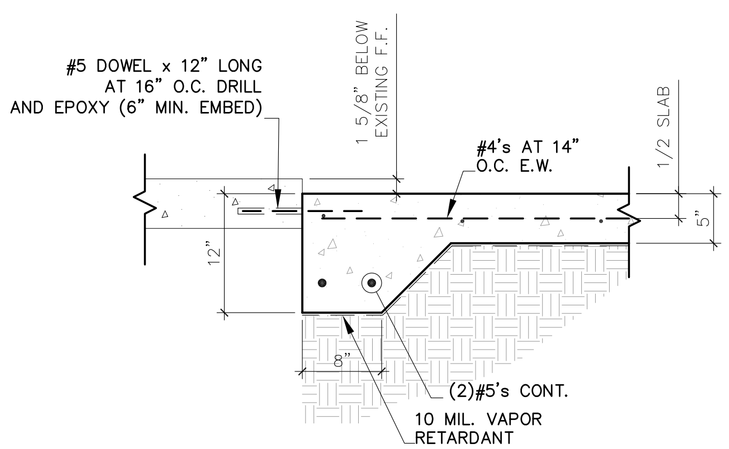

9 NEW SLAB SECTION
SCALE: NOT TO SCALE

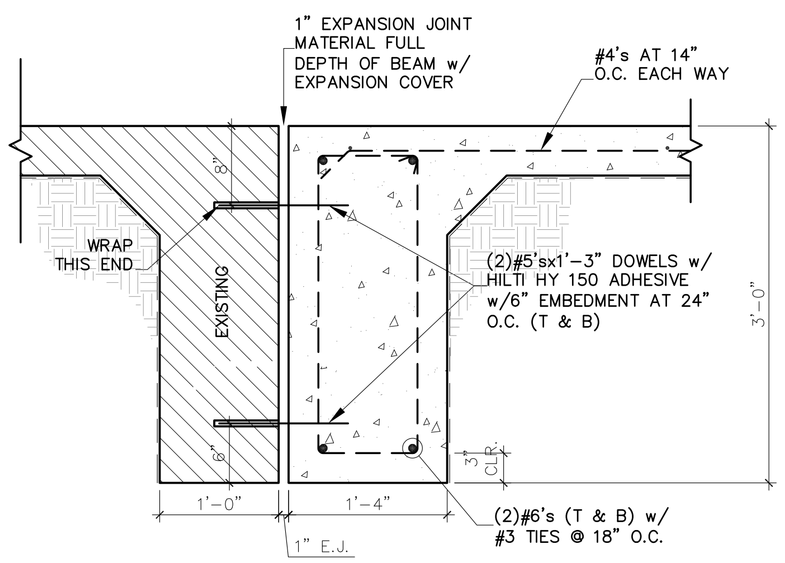

6 EXPASION JOINT
SCALE: NOT TO SCALE

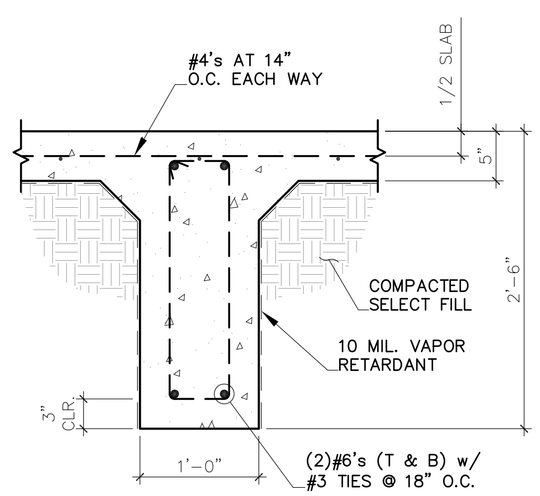

3 INTERIOR GRADE BEAM
SCALE: NOT TO SCALE

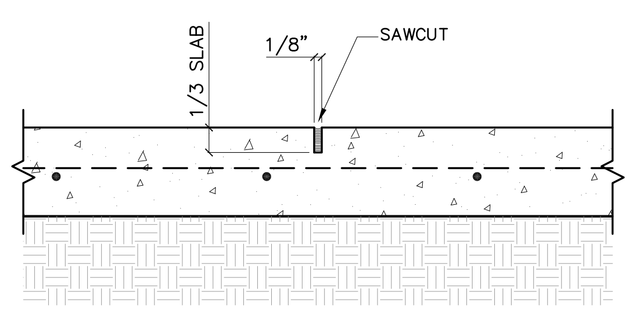

10 CONTROL JOINT
SCALE: NOT TO SCALE

PROJECT:
Starr County Memorial Hospital
MRI Addition & Renovation
Rio Grande City, Texas

DESIGN GROUP INTERNATIONAL
DELFINO GARZA JR., • ARCHITECT • 1701 MIER STREET • LAREDO, TEXAS 78043 (956) 724-6268

9-11-18
STATE OF TEXAS
C. HINOJOSA, JR.
90636
LICENSED PROFESSIONAL ENGINEER

CLH ENGINEERING, INC.
TBPE FIRM No. F-8719
701 S. 15th STREET McALLEN, TX. 78501
(956) 687-5560 (956) 687-5561 FAX

SHEET
OF SD1.0

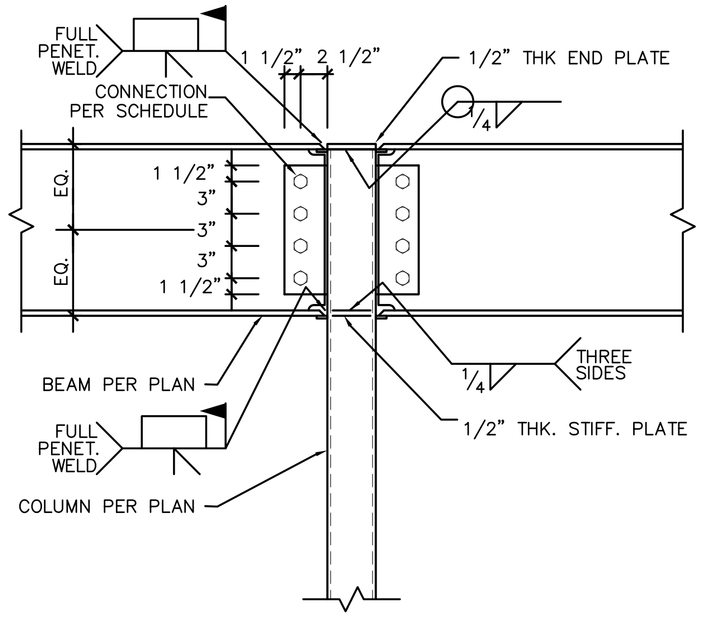

BEAM CONNECTION SCHEDULE				
BEAM DEPTH	SHEAR/ STIFF PLATE	NO. & SIZE A325 N BOLTS	WELD SIZE	REMARKS
8,10	1/4	(2) 3/4" DIA.	3/8"	
12, 14	3/8	(3) 3/4" DIA.	3/8"	
16	3/8	(4) 3/4" DIA.	3/8"	
18	1/2	(5) 3/4" DIA.	3/8"	
21	1/2	(6) 3/4" DIA.	3/8"	
24	1/2	(7) 3/4" DIA.	3/8"	

8 STEEL BEAM MOMENT CONNECTION
SCALE: NOT TO SCALE

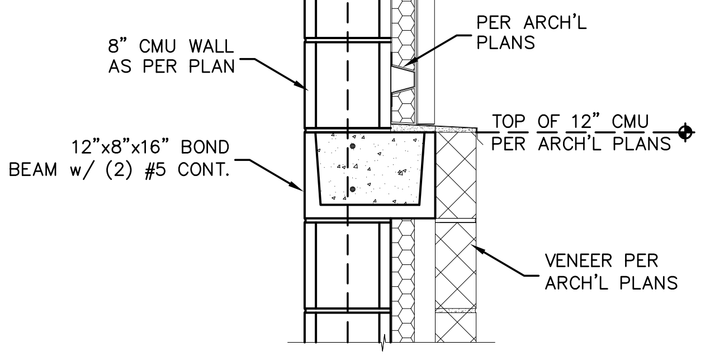

9 12" CMU BLOCK AT VENEER STOP
SCALE: NOT TO SCALE

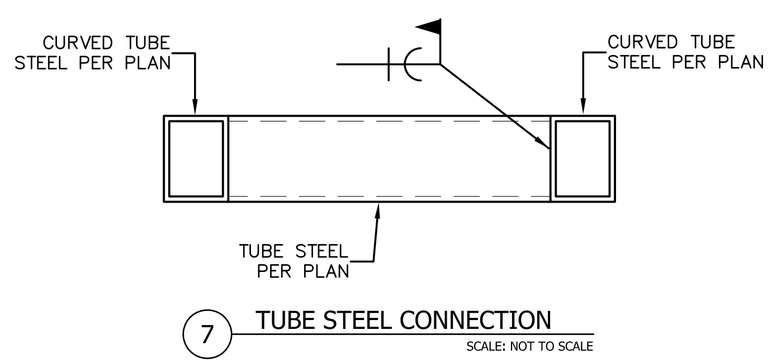

7 TUBE STEEL CONNECTION
SCALE: NOT TO SCALE

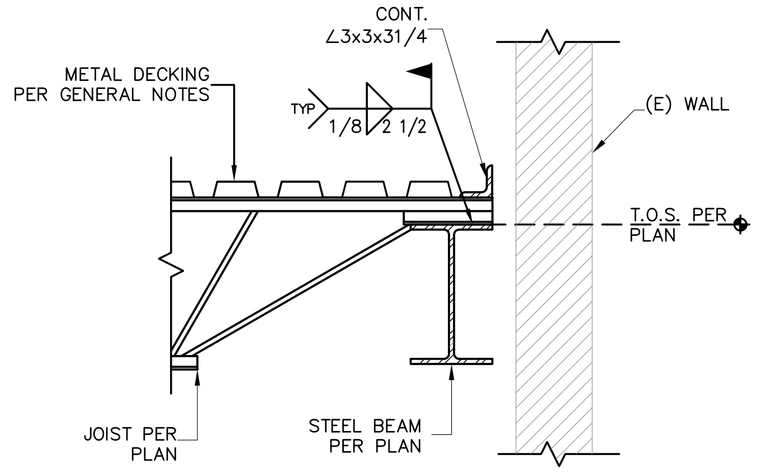

4 STEEL JOIST TO STEEL BEAM
SCALE: NOT TO SCALE

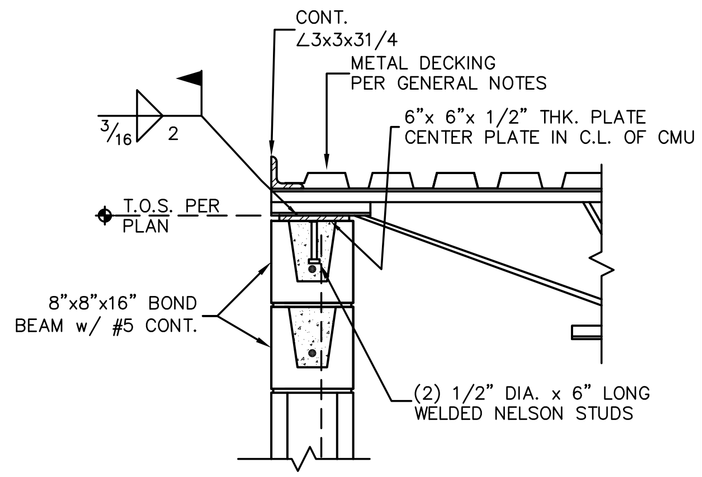

1 STEEL JOIST TO 8" CMU WALL
SCALE: NOT TO SCALE

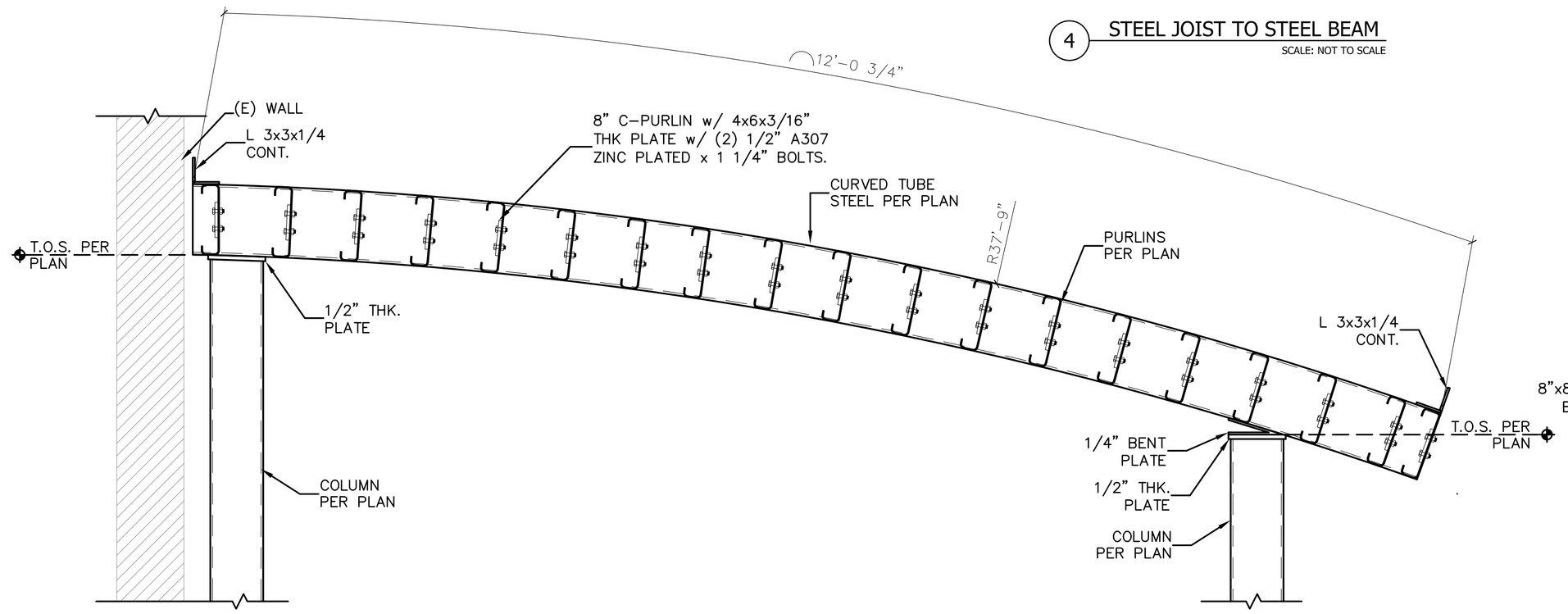

5 CANOPY SECTION
SCALE: NOT TO SCALE

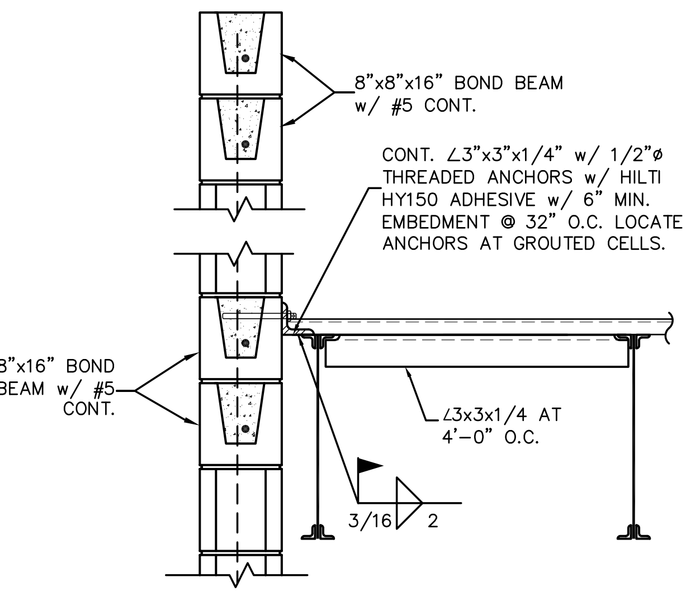

2 STEEL JOIST TO 8" CMU WALL
SCALE: NOT TO SCALE

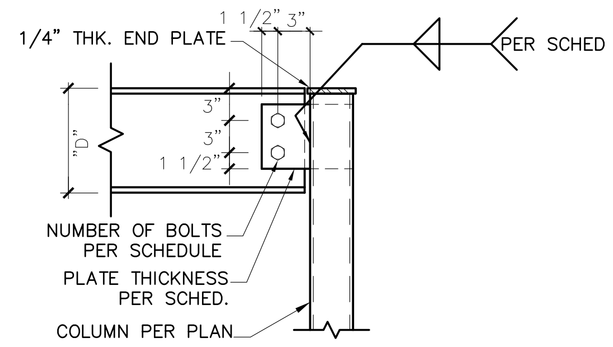

SIMPLE BEAM CONNECTION SCHEDULE			
BEAM DEPTH "D"	SHEAR/ STIFF PLATE	NO. & SIZE OF A325N BOLTS	WELD SIZE
8,10	1/4	(2) 5/8" DIA.	1/4"
12, 14	1/4	(3) 3/4" DIA.	1/4"
16	3/8	(4) 3/4" DIA.	3/8"
18	3/8	(5) 3/4" DIA.	3/8"
21	1/2	(6) 3/4" DIA.	3/8"
27	1/2	(8) 3/4" DIA.	3/8"
30	3/4	(9) 3/4" DIA.	3/8"
33	3/4	(10) 3/4" DIA.	3/8"

3 STEEL BEAM TO COLUMN CONNECTION
SCALE: NOT TO SCALE

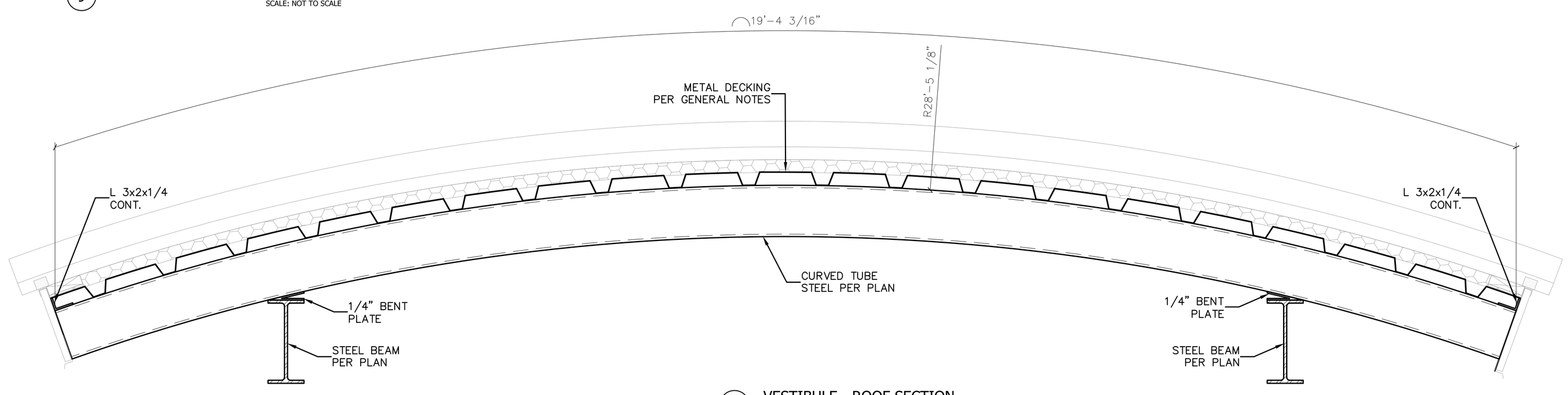

6 VESTIBULE - ROOF SECTION
SCALE: NOT TO SCALE

PROJECT:
Starr County Memorial Hospital
MRI Addition & Renovation
Rio Grande City, Texas

DESIGN GROUP INTERNATIONAL
DELFINO GARZA JR., • ARCHITECT • 1701 MIER STREET • LAREDO, TEXAS 78043 (956) 724-6268

9-11-18
STATE OF TEXAS
C. HINOJOSA, JR.
90636
LICENSED PROFESSIONAL ENGINEER

CLH ENGINEERING, INC.
TBPE FIRM No. F-8719
701 S. 15th STREET McALLEN, TX. 78501
(956) 687-5560 (956) 687-5561 FAX

SHEET
OF SD2.0

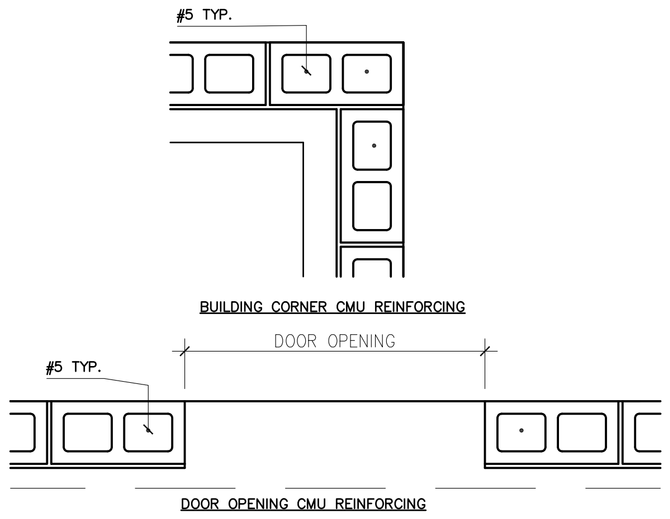

9 CMU VERTICAL REINFORCING
SCALE: NOT TO SCALE

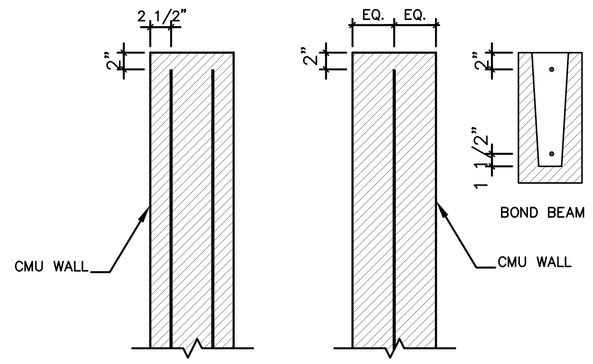

7 TYP. REINFORCING PLACEMENT & CLEARANCE
SCALE: NOT TO SCALE

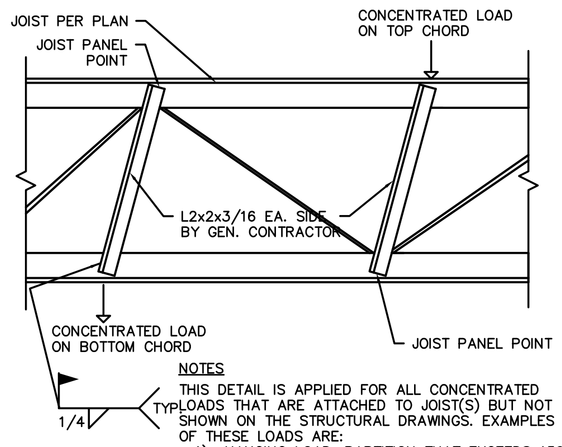

NOTES
THIS DETAIL IS APPLIED FOR ALL CONCENTRATED LOADS THAT ARE ATTACHED TO JOIST(S) BUT NOT SHOWN ON THE STRUCTURAL DRAWINGS. EXAMPLES OF THESE LOADS ARE:
1) HANGING LOAD, PARTITION THAT EXCEEDS 150 lb.
2) HANGING PLUMBING, MECH'L STEEL PIPE WITH DIA. > 5"
3) HANGING BASKETBALL GOALS
4) MECHANICAL UNITS.

4 JOIST BRACING
SCALE: NOT TO SCALE

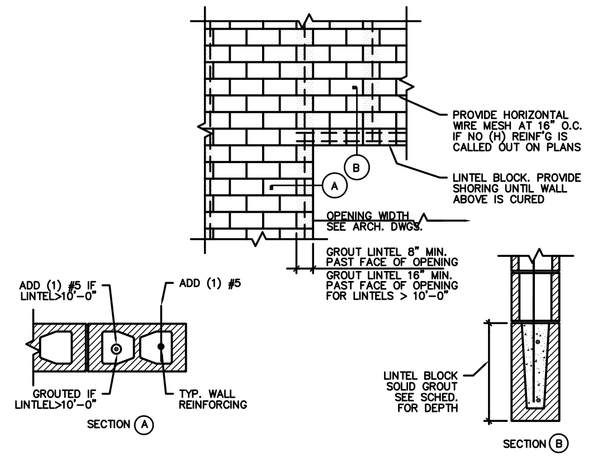

LINTEL SCHEDULE			
CLEAR SPAN	WIDTH	DEPTH	REINFORCEMENT
2'-0 THRU 3'-11	8"	8"	1 - #5 ON CENTER OF LINTEL
4'-0 THRU 5'-11	8"	16"	1 - #5 T&B w/ #3 TIES @ 8" O.C.
6'-0 THRU 9'-11	8"	16"	1 - #6 T&B w/ #3 TIES @ 8" O.C.
10'-0 THRU 11'-11	8"	24"	1 - #7 T&B w/ #3 TIES @ 8" O.C.

1 CMU LINTEL SCHEDULE
SCALE: NOT TO SCALE

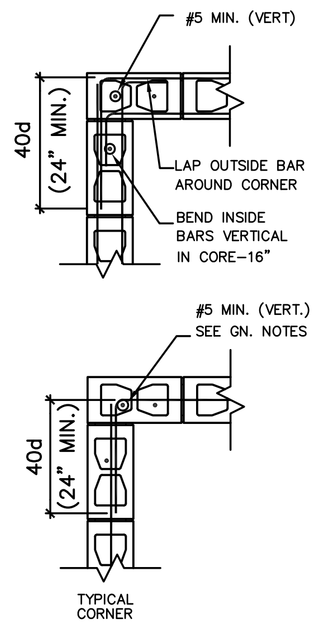

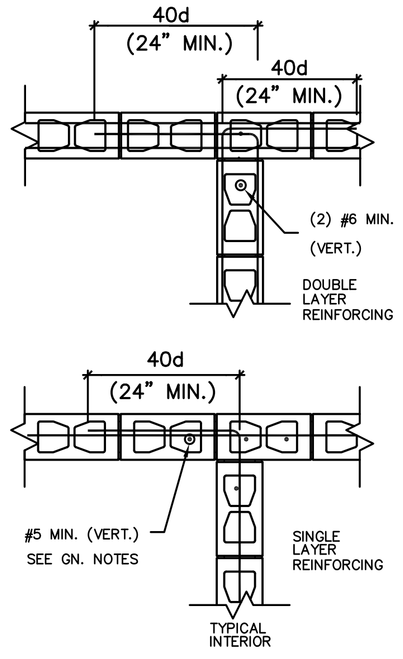





10 TYPICAL REINF'G AT CMU WALLS
SCALE: NOT TO SCALE

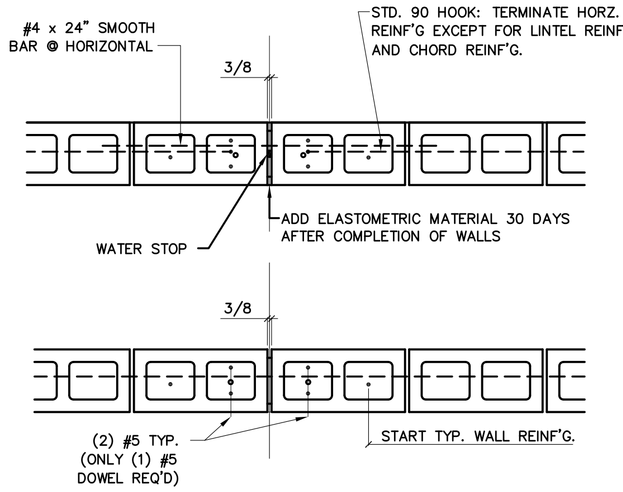

CONTROL JOINT CMU REINFORCING

NOTE:
SPACE C.J. AT 24'-0 O.C. MAX. PROVIDE PROPOSAL LOCATION TO STRUCTURAL ENGINEER FOR APPROVAL

8 TYP. CMU CONTROL JOINTS
SCALE: NOT TO SCALE

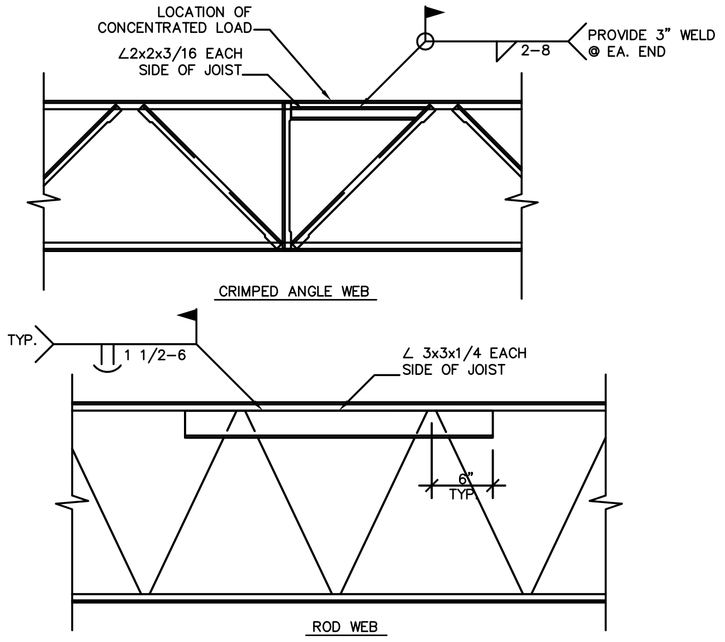

NOTE:
TOP CHORD SHALL BE REINFORCED WHEREVER A CONCENTRATED LOAD IN EXCESS OF 50 LBS. OCCURS BETWEEN PANEL POINTS OF THE JOIST.

5 TYPICAL TOP CHORD REINFORCEMENT FOR KCS OR K-SERIES JOISTS DETAIL
SCALE: NOT TO SCALE

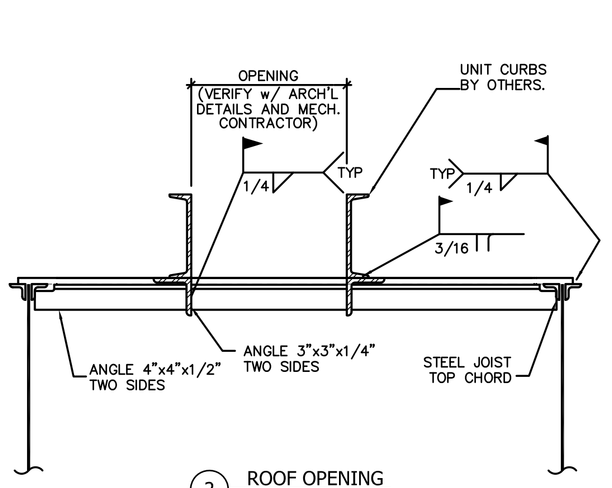

2 ROOF OPENING
SCALE: NOT TO SCALE

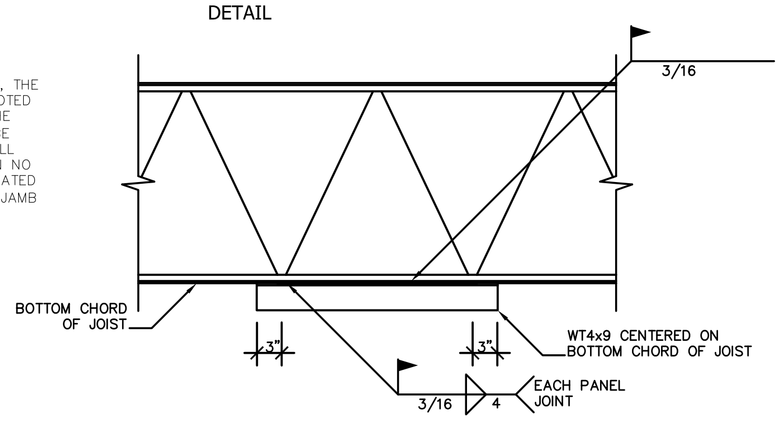

NOTE:
THIS DETAIL APPLIES WHEREVER A CONCENTRATED LOAD GREATER THAN 50 POUNDS OCCURS BETWEEN PANEL POINTS OF BOTTOM CHORD JOIST.

6 TYPICAL JOIST BOTTOM CHORD REINFORCEMENT
SCALE: NOT TO SCALE

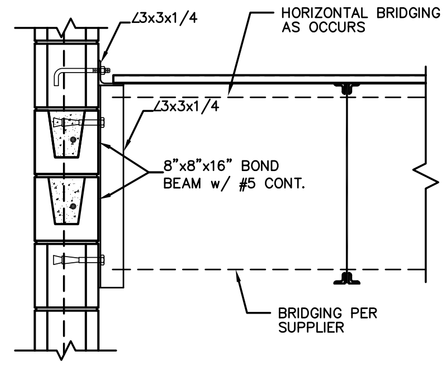

3 BRIDGING TO CMU
SCALE: NOT TO SCALE

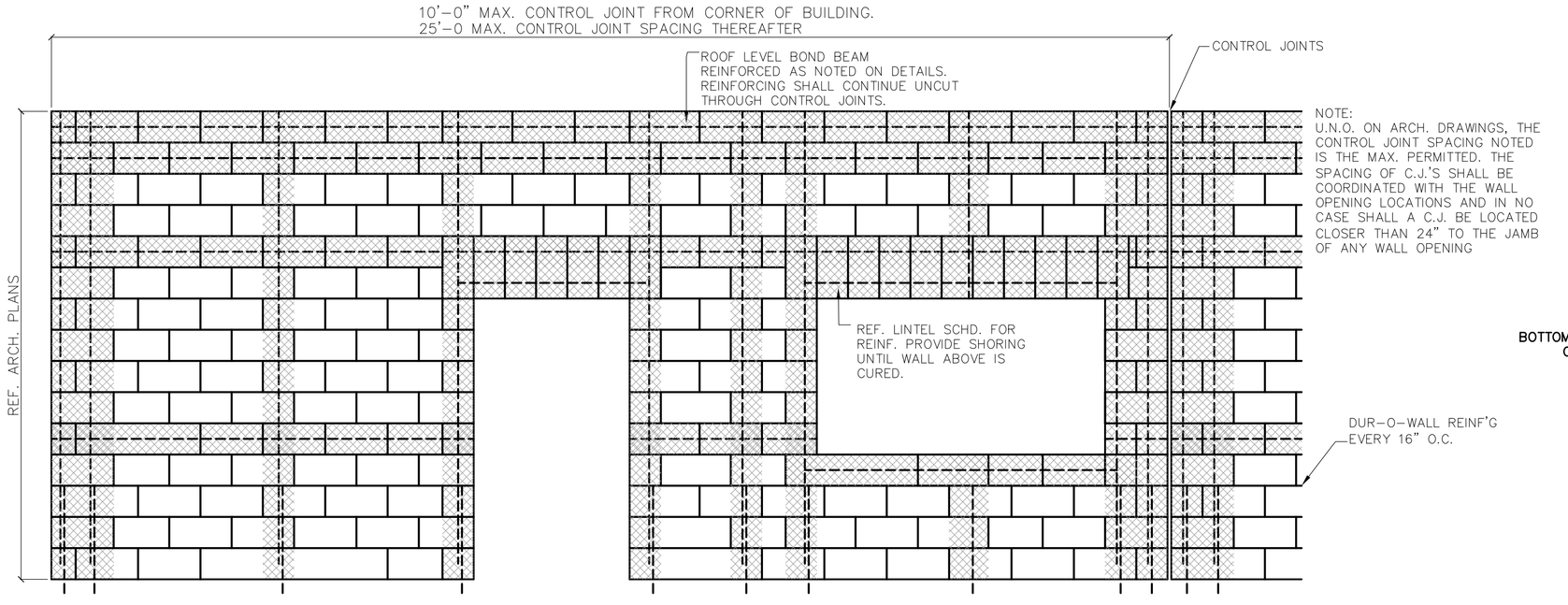

NOTE:
U.N.O. ON ARCH. DRAWINGS, THE CONTROL JOINT SPACING NOTED IS THE MAX. PERMITTED. THE SPACING OF C.J.'S SHALL BE COORDINATED WITH THE WALL OPENING LOCATIONS AND IN NO CASE SHALL A C.J. BE LOCATED CLOSER THAN 24" TO THE JAMB OF ANY WALL OPENING

11 TYPICAL CMU WALL ELEVATION & DETAILS
SCALE: NOT TO SCALE

PROJECT:
Starr County Memorial Hospital
MRI Addition & Renovation
Rio Grande City, Texas

DESIGN GROUP INTERNATIONAL
DELFINO GARZA JR., • ARCHITECT • 1701 MIER STREET • LAREDO, TEXAS 78043 (956) 724-6268

9-11-18
STATE OF TEXAS
C. HINOJOSA, JR.
90636
LICENSED PROFESSIONAL ENGINEER

CLH ENGINEERING, INC.
TBPE FIRM No. F-8719
701 S. 15th STREET McALLEN, TX. 78501
(956) 687-5560 (956) 687-5561 FAX

SHEET
OF SD2.1

ABBREVIATIONS (NOT ALL ITEMS INDICATED APPLY TO THIS PROJECT)

A

A	AIR (COMPRESSED)
ABV	ABOVE
A/C	AIR CONDITIONING
AC	ALTERNATING CURRENT AIR COMPRESSOR
ACCH	AIR COOLED CHILLER
ACCU	AIR COOLED CONDENSING UNIT
AD	ACCESS DOOR, AREA DRAIN
ADJ	ADJUSTABLE
AF	AIR FILTER
AFC	ABOVE FINISHED CEILING
AFF	ABOVE FINISHED FLOOR
AFG	ABOVE FINISHED GRADE
AHU	AIR HANDLING UNIT
AL	ALUMINUM
AMB	AMBIENT
AP	ACCESS PANEL
APD	AIR PRESSURE DROP
ARI	AMERICAN REFRIGERANT INSTITUTE
ARCH	ARCHITECT, ARCHITECTURAL
AS	AIR SEPARATOR
ASHRAE	AMERICAN SOCIETY OF HEATING AND REFRIGERATION ENGINEERS
ASME	AMERICAN SOCIETY OF MECHANICAL ENGINEERS
ASTM	AMERICAN SOCIETY OF TESTING AND MATERIALS
AV	ACID VENT, AIR VENT
AVG	AVERAGE
AWS	AMERICAN WELDING SOCIETY
AUX	AUXILIARY

B

B	BOILER
BC	BELOW COUNTER
B/C	BACK OF CURB
BFV	BUTTERFLY VALVE
BH	BOX HYDRANT
BLDG	BUILDING
BM	BENCHMARK
BOF	BOTTOM OF FOOTING
BOS	BOTTOM OF STRUCTURE
BT	BATH TUB, BREAK TANK
BTU	BRITISH THERMAL UNIT
BV	BALL VALVE
BWV	BACK WATER VALVE

C

C	CELSIUS
CAB	CABINET
CB	CATCH BASIN
CD	CONDENSATE DRAIN LINE
CFM	CUBIC FEET PER MINUTE
CFS	CUBIC FEET PER SECOND
CH	CHILLER
CHW	CHILLED WATER
CHWP	CHILLED WATER PUMP
CHWR	CHILLED WATER RETURN
CHWS	CHILLED WATER SUPPLY
CI	CAST IRON
CIRC	CIRCULATING
CL	CENTERLINE
CLG	CEILING
CLR	CLEAR
CMP	CORRUGATED METAL PIPE
CMU	CONCRETE MASONRY UNIT
CPI	CAST IRON PIPE INSTITUTE
CPVC	CHLORINATED POLYVINYL CHLORIDE
CO	CLEAN OUT
COL	COLUMN
COMB	COMBINATION
COMP	COMPRESSOR
CON	CONVERTER
CONC	CONCRETE, CONCENTRIC
COND	CONDENSER, CONDENSATE
CONN	CONNECTION
CONT	CONTINOUS, CONTINUATION
CONTR	CONTROLLER, CONTRACTOR
CRAC	COMPUTER ROOM A/C UNIT
CRT	CATHODE RAY TUBE
CT	COOLING TOWER
CTR	CENTER
CU	COPPER
CW	COLD WATER
CWP	CONDENSER WATER PUMP
CWR	CONDENSER WATER RETURN
CWS	CONDENSER WATER SUPPLY

D

D	DEPTH, DRAIN, DRYER
DB	DRY BULB
DC	DOUBLE DUCT CONSTANT VOLUME, DIRECT CURRENT
DDC	DIRECT DIGITAL CONTROL
DESIG	DESIGNATION
DTL	DETAIL
DF	DRINKING FOUNTAIN
DIA	DIAMETER
DIFF	DIFFUSER
DIM	DIMENSION
DISC	DISCONNECT
DN	DOWN
DPR	DAMPER
DS	DOWNSPOUT, DOUBLE SUCTION
DV	DOUBLE DUCT VAV
DW	DISHWASHER
DWG	DRAWING
DWH	DOMESTIC WATER HEATER
DWP	DOMESTIC WATER PUMP
DX	DIRECT EXPANSION

E

EA	EACH
EAT	ENTERING AIR TEMPERATURE
EC	ELECTRICAL CONTRACTOR
ECC	ECCENTRIC
EDB	ENTERING DRY BULB
EDF	ELECTRIC DRINKING FOUNTAIN
EDH	ELECTRIC DUCT HEATER
EF	EXHAUST FAN
EFF	EFFICIENCY
EJ	EXPANSION JOINT
EL	ELEVATION
ELEC	ELECTRICAL
ELEV	ELEVATOR EMERGENCY ENCLOSURE
EMERG	EMERGENCY
ENCL	ENCLOSURE
ENGR	ENGINEER
EQ	EQUAL
EQUIP	EQUIPMENT
ES	END SUCTION, EMERGENCY SHOWER
ESP	EXTERNAL STATIC PRESSURE EXPANSION TANK
ET	EXPANSION TANK
ETR	EXISTING TO REMAIN
EVAP	EVAPORATOR
EWB	ENTERING WET BULB
EWT	ENTERING WATER TEMPERATURE
EX	EXPLOSION-PROOF
EXT	EXTERNAL
EXTG	EXISTING

F

F	FAHRENHEIT, FIRE
FBO	FURNISHED BY OTHERS
FCO	FLOOR CLEAN OUT
FCS	FLOOR CONTROL STATION
FCU	FAN COIL UNIT
FD	FLOOR DRAIN, FIRE DAMPER
FDS	FIRE DEPARTMENT SIAMESE
FDV	FIRE DEPARTMENT VALVE
FH	FIRE HYDRANT
FHC	FIRE HOSE CABINET
FHR	FIRE HOSE RACK
FIXT	FIXTURE
FLA	FULL LOAD AMPS
FLEX	FLEXIBLE
FL	FLOW LINES
FLR	FLOOR
FP	FIRE PUMP
FPT	FAN POWERED TERMINAL
FRZR	FREEZER
FS	FLOW SWITCH, FIRE SPRINKLER
FSK	FLOOR SINK
FT	FOOT, FEET
FUT	FUTURE

G

G	GAS
GA	GAUGE
GAL	GALLON
GALV	GALVANIZED
GC	GENERAL CONTRACTOR
GLV	GLOBE VALVE
GND	GROUND
GPD	GALLONS PER DAY
GPH	GALLONS PER HOUR
GPM	GALLONS PER MINUTE
GSH	GRAND SENSIBLE HEAT
GTH	GRAND TOTAL HEAT
GV	GATE VALVE

H

HB	HOSE BIBB
HD	HEAD, HUB DRAIN
HE	HEAT EXCHANGER
HF	HUMIDIFIER
HORIZ	HORIZONTAL
HP	HORSEPOWER, HALON PANEL
HPU	HEAT PUMP UNIT
HKP	HOUSEKEEPING PAD
HSC	HORIZONTAL SPLIT CASE
HSTAT	HUMIDISTAT
HT	HEIGHT
HTG	HEATING
HTR	HEATER
HW	HOT WATER
HWC	HOT WATER CIRCULATOR
HWP	HEATING WATER PUMP
HWR	HOT WATER RETURN
HWS	HOT WATER SUPPLY
HZ	HERTZ

I

ID	INSIDE DIAMETER
IE	INVERT ELEVATION
IH	INFRARED HEATER
IN	INCH
INSUL	INSULATION
INT	INTERNAL, INTERIOR
IW	INDIRECT WASTE

J

JB	JUNCTION BOX
JP	JOCKEY PUMP

K

KEC	KITCHEN EQUIPMENT CONTRACTOR
KO	KNOCKOUT
KVA	KILOVOLT- AMPS
KW	KILOWATT

L

L	LENGTH, LAVATORY
LAT	LEAVING AIR TEMPERATURE
LAV	LAVATORY
LF	LINEAR FEET
LP	LOW PRESSURE
LRA	LOCKED ROTOR AMPS
LVL	LEVEL
LWB	LEAVING WET BULB
LWCO	LOW WATER CUT OFF
LWT	LEAVING WATER TEMPERATURE

M

MAT	MIXED AIR TEMPERATURE
MAX	MAXIMUM
MBTUH	THOUSAND OF BTU'S
MC	MECHANICAL CONTRACTOR
MECH	MECHANICAL
MFR	MANUFACTURER
MH	MANHOLE
MI	MALLEABLE IRON
MIN	MINIMUM
MP	MEDIUM PRESSURE
MS	MOP SINK
MTD	MOUNTED
MU	MAKE-UP
MVD	MANUAL VOLUME DAMPER

N

N.C.	NORMALLY CLOSED
NFPA	NATIONAL FIRE PROTECTION ASSOCIATION
NIC	NOT IN CONTRACT
N.O.	NORMALLY OPEN
NO.	NUMBER
NTS	NOT TO SCALE

O

OA	OUTSIDE AIR
OAF	OUTSIDE AIR FAN
OAHU	OUTSIDE AIR HANDLING UNIT
OBD	OPPOSED BLADE DAMPER
OC	ON CENTER
OD	OUTSIDE DIAMETER, OVERFLOW DRAIN
OFCU	OUTSIDE AIR FAN COIL UNIT
OPG	OPENING
OS&Y	OPEN STEM AND YOLK

P

P	PUMP, PLUMBING EQUIPMENT
PC	PLUMBING CONTRACTOR
PCR	PUMPED CONDENSATE RETURN
PD	PRESSURE DROP, PLANTER DRAIN
PH	PHASE, POST HYDRANT
PIV	POST INDICATOR VALVE
PLBG	PLUMBING
PNEU	PNEUMATIC
PNL	PANEL
PNTH	PENTHOUSE
PP	POLYPROPYLENE
PPM	PART PER MILLION
PRI	PRIMARY
PRS	PRESSURE REDUCING STATION
PRV	PRESSURE REDUCING VALVE
PSF	POUNDS PER SQUARE FOOT
PSI	POUNDS PER SQUARE INCH
PSIG	POUNDS PER SQUARE INCH GAUGE
PT	PLUMBING TRIM
PV	PLUG VALVE
PVC	POLYVINYL CHLORIDE

Q

QTY	QUANTITY

R

RA	RETURN AIR
RAD	REFRIGERATED AIR DRYER
RAF	RETURN AIR FAN
RAG	RETURN AIR GRILL
RAT	RETURN AIR TEMPERATURE
RCP	REFLECTED CEILING PLAN, REINFORCED CONCRETE PIPE
RD	ROOF DRAIN
RE	REFERENCE, REFER
RECIRC	RECIRCULATE
RED	REDUCER
REFR	REFRIGERATOR
REG	REGISTER
REINF	REINFORCING
REQD	REQUIRED
REV	REVISION, REVISE
RH	RELATIVE HUMIDITY
RHG	REFRIGERANT HOT GAS
RKVA	RUNNING KILOVOLT-AMPS
RKW	RUNNING KILOWATTS
RL	REFRIGERANT LIQUID
RLA	RUNNING LOAD AMPS
RM	ROOM, REFRIGERATION MACHINE
RPM	REVOLUTIONS PER MINUTE
RS	REFRIGERANT SUCTION
RTU	ROOFTOP UNIT
RV	RELIEF VALVE

S

S	STEAM
SA	SUPPLY AIR
SAF	SUPPLY AIR FAN
SAG	SUPPLY AIR GRILLE
SAN	SANITARY SEWER
SAR	SUPPLY AIR REGISTER
SC	STEAM CONDENSATE
SCHED	SCHEDULED
SCR	SILICON CONTROLLED RECTIFIER
SD	STORM DRAIN
SE	SEWAGE EJECTOR
SEC	SECONDARY
SECT	SECTION
SENS	SENSIBLE
SF	SQUARE FEET
SFCS	SPRINKLER FLOOR CONTROL STATION
SH	SHOWER
SHT	SHEET
SIM	SIMILAR
SK	SINK
SKVA	STARTING KILOVOLT-AMPS
SKW	STARTING KILOWATTS
SM	SHEETMETAL
SP	SUMP PUMP, STATIC PRESSURE
SPEC	SPECIFICATION
SPR	SPRINKLER
SQ	SQUARE
SS	SERVICE SINK
SSD	SUBSURFACE DRAIN
SSFU	SANITARY SEWER FIXTURE UNITS
SSSC	SOLID STATE SPEED CONTROL
STD	STANDARD
STL	STEEL
STR	STRAINER
SURF	SURFACE
SUSP	SUSPEND
SV	SANITARY VENT

MECHANICAL PIPING SYMBOLS

CWS	CONDENSER WATER SUPPLY		STRAINER WITH BLOW DOWN VALVE
CWR	CONDENSER WATER RETURN		GATE VALVE, HVAC BALANCING/STOP VALVE
CHS	CHILLED WATER SUPPLY		GLOBE VALVE
CHR	CHILLED WATER RETURN		BALL VALVE
CD	CONDENSATE DRAIN LINE		BALANCING VALVE WITH DIFFERENTIAL PRESSURE TAPS
	CAP ON END OF PIPE		OS&Y VALVE
	ELBOW UP		CHECK VALVE
	ELBOW DOWN		BUTTERFLY VALVE
	VALVE IN DROP		TWO-WAY MODULATING CONTROL VALVE
	VALVE IN RISE		THREE-WAY MODULATING CONTROL VALVE
	DIRECTION OF FLOW		SOLENOID VALVE
	DIRECTION OF SLOPE DOWN		PRESSURE REDUCING VALVE
	CONCENTRIC REDUCER		GAS REGULATOR
	ECCENTRIC REDUCER		GAS COCK
	TEE OUTLET UP	FCS	SPRINKLER FLOOR CONTROL STATION
	TEE OUTLET DOWN		MANUAL AIR VENT
	UNION		AUTOMATIC AIR VENT
	FLANGE		T&P RELIEF VALVE
	PIPE ANCHOR		PRESSURE GAUGE WITH GAUGE COCK
	EXPANSION JOINT		STEAM TRAP
	PRESSURE AND TEMPERATURE TAP		WATER METER
	FLOW VENTURI		FLEXIBLE CONNECTION
	VACUUM BREAKER		
	VACUUM RELIEF VALVE		
	BACKFLOW PREVENTOR		
	THERMOMETER		
	CIRCULATING PUMP		

T

TC	TEMPERATURE CONTROL
TCC	TEMPERATURE CONTROL COMPRESSOR
TD	TRENCH DRAIN
TF	TRANSFER FAN
TDH	TOTAL DYNAMIC HEAD
TH BLK	THRUST BLOCK
TP	TRAP PRIMER
TPD	TRAP PRIMER DEVICE
TSP	TOTAL STATIC PRESSURE
TSTAT	THERMOSTAT
TYP	TYPICAL

U

U	URINAL
UCD	UNDER CUT DOOR
UG	UNDERGROUND
UH	UNIT HEATER
UL	UNDERWRITERS LABORATORIES, INC.
UNO	UNLESS NOTED OTHERWISE
U/F	UNDERFLOOR
U/S	UNDERSLAB

V

V	VOLT, VENT
VA	VOLT- AMPERE
VAC	VACUUM
VAV	VARIABLE AIR VOLUME
VB	VALVE BOX, VACUUM BREAKER
VCP	VITRIFIED CLAY PIPE
VD	VOLUME DAMPER
VEL	VELOCITY
VERT	VERTICAL
VFD	VARIABLE FREQUENCY DRIVE
VIB	VALVE IN BOX
VOV	VALVE ON VERTICAL
VP	VACUUM PUMP
VR	VARIABLE AIR VOLUME REHEAT
VTR	VENT THRU ROOF

W

W	WATT, WASTE, WIDTH, WASHER
W/	WITH
W/O	WITHOUT
WB	WET BULB
WC	WATER CLOSET
WCO	WALL CLEAN OUT
WH	WALL HYDRANT
WM	WATER METER
WP	WEATHERPROOF
WPD	WATER PRESSURE DROP
WWF	WELDED WIRE FABRIC
WT	WATERTIGHT, WEIGHT

Y

Y	YARD HYDRANT

Z

Z	ZONE

DUCTWORK SYMBOLS - NEW

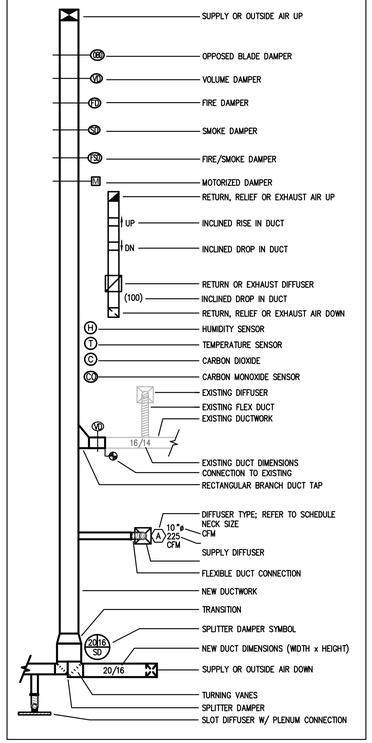

1 M-0 MECHANICAL SYMBOLS AND ABBREVIATIONS

NOT TO SCALE

PROJECT:

Starr County Memorial Hospital

MRI Addition and Renovation

128 N. FM Road 3167 Rio Grande City, Texas

DESIGN GROUP INTERNATIONAL

DELFINO GARZA JR., • ARCHITECT • 1701 MIER STREET • LAREDO, TEXAS 78043 • (956) 724-6268

STATE OF TEXAS
EDWARD D. PUENTES
102338
LICENSED PROFESSIONAL ENGINEER

09/10/2018

DBR

200 South 10th Street Suite 901
Mc Allen, Texas 78501
956.683.1640 p 956.683.1903 f
TBPE Firm Registration No. 2234

DBR Project Number 178007.000

AS	MG	JB	TL	–

SHEET

M-0

Plotted: Sep 7, 2018, 3:10 PM by user: mgarza - Saved: 9/6/2018 by user: mgarza
N:\17\178007.000\Drawings\0M-178007-DETAILS AND SCHEDULES.dwg

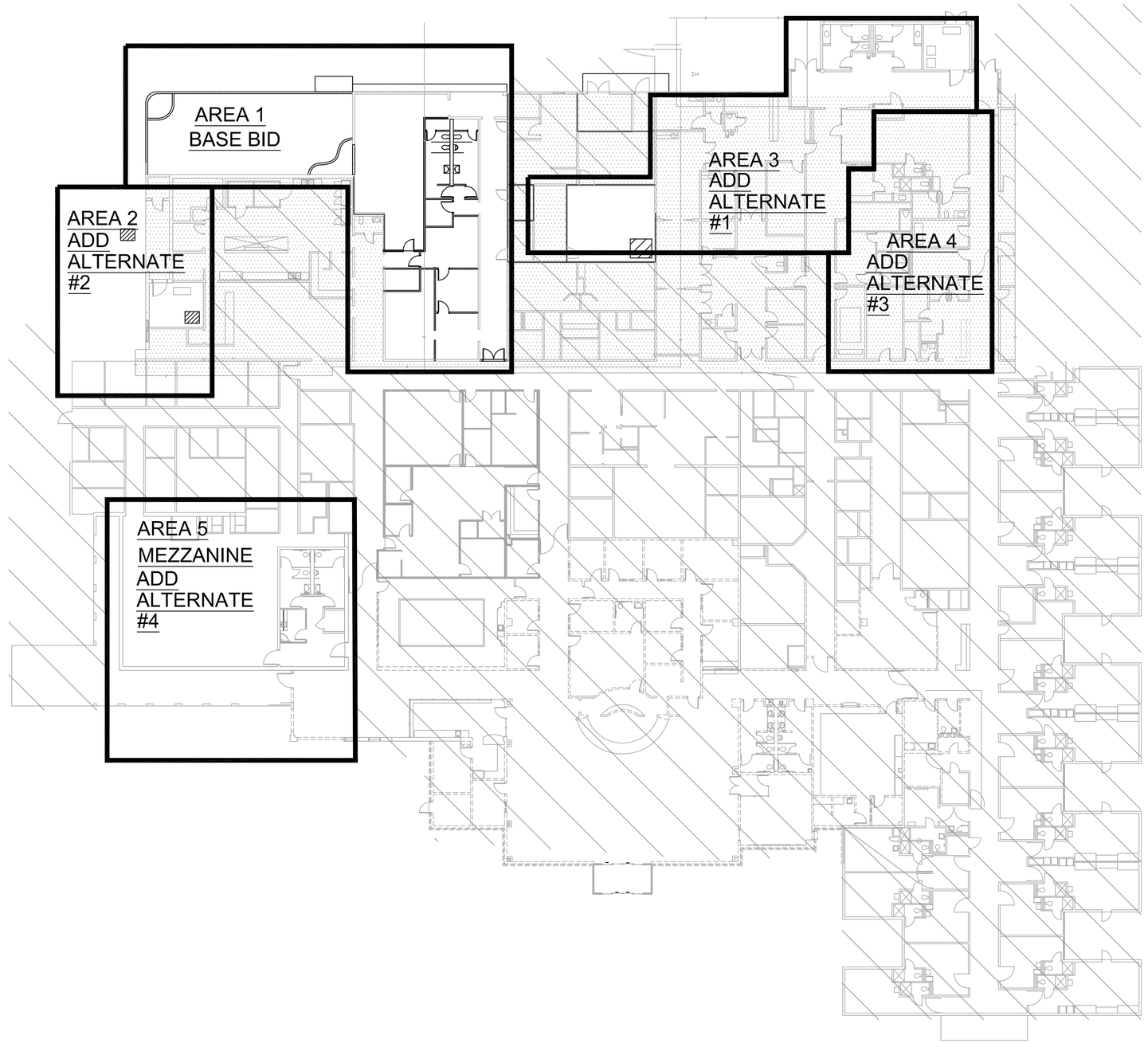

1 M-1.0 MECHANICAL OVERALL PLAN
1/16"=1'-0"

KEY PLAN

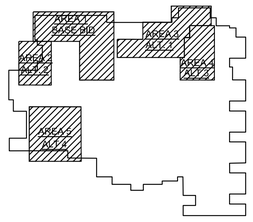

PROJECT:
Starr County Memorial Hospital
MRI Addition and Renovation
128 N. FM Road 3167 Rio Grande City, Texas

DESIGN GROUP INTERNATIONAL
DELFINO GARZA JR., • ARCHITECT • 1701 MIER STREET • LAREDO, TEXAS 78043 • (956) 724-6268

STATE OF TEXAS
EDWARD PUENTES
102338
LICENSED
PROFESSIONAL ENGINEER
09/10/2018

DBR
200 South 10th Street Suite 901
Mc Allen, Texas 78501
956.683.1640 p 956.683.1903 f
TBPE Firm Registration No. 2234

DBR Project Number 178007.000

AS	MG	JB	TL	–

SHEET
M-1.0

Plotted: Sep 7, 2018, 3:6 PM by user: mgarza - Saved: 9/7/2018 by user: mgarza
N:\17\178007.000\Drawings\0M-178007-1.dwg



MECHANICAL GENERAL DEMOLITION NOTES

A. COORDINATE DEMOLITION WORK WITH ELECTRICAL AND OTHER DISCIPLINES AS REQUIRED.

B. IT IS THE CONTRACTOR'S RESPONSIBILITY TO HAVE VERIFIED EXISTING JOBSITE CONDITIONS DURING THE BIDDING PERIOD, SO THEY WILL HAVE DISCOVERED THE FULL SCOPE OF WORK INVOLVED WITH THE MODIFICATION OF THIS EXISTING SPACE. THE SCOPE OF THE WORK SHALL INCLUDE ALL MATERIALS FOR A COMPLETE INSTALLATION INCLUDING DEVICES, EQUIPMENT, OR APPARATUS WHICH MUST BE REMOVED, RELOCATED, OR REMOVED EITHER TEMPORARILY OR PERMANENTLY, OR WHICH MUST BE PROVIDED TO ACCOMMODATE THE INDICATED REMODELING. NOT ALL EXISTING CONDITIONS ARE NECESSARILY INDICATED ON THE DRAWINGS. ALL HVAC SHOWN ARE TAKEN FROM AS-BUILT HARDCOPY AND MUST BE FIELD VERIFIED.

C. WHEN AN EQUIPMENT IS IDENTIFIED TO BE REMOVED, THE OWNER HAS FIRST RIGHT OF REFUSAL BEFORE DISPOSING OF THAT EQUIPMENT. PROVIDE DISTRICT ONE WEEK NOTICE PRIOR TO DEMOLITION.

D. PROVIDE ALL NECESSARY CLEAR PATH TO MOVE DEMOLISHED EQUIPMENT OUT OF THE FACILITY AS WELL TO BRING NEW EQUIPMENT INTO THE BUILDING. MODIFY EXISTING PIPING, DUCTWORK CONDUITS, AS REQUIRED TO COMPLETE THE DEMOLITION.

MECHANICAL DEMOLITION KEYED NOTES

1 DEMOLISH AIR HANDLING UNIT. ALL DUCTWORK ASSOCIATED WITH AIR HANDLING UNIT SHALL REMAIN. REFER TO M-2.1 FOR NEW WORK. FIELD VERIFY EXISTING CONDITIONS.

2 ALL HYDRONIC PIPING SHALL REMAIN. TEMPORARILY CAP PIPING AFTER DISCONNECTION FROM EXISTING AIR HANDLING UNIT. REFER TO M-2.1 FOR NEW WORK. FIELD VERIFY EXISTING CONDITIONS.

3 EXISTING AIR HANDLING SHALL REMAIN.

4 EXISTING CHILLED WATER PUMP SHALL BE DEMOLISHED. REMOVE AND REPLACE EXISTING HYDRONIC VALVES. EXISTING ASSOCIATED HYDRONIC PIPING SHALL REMAIN. FIELD VERIFY EXISTING CONDITIONS.

5 EXISTING HOT WATER PUMP SHALL BE DEMOLISHED. REMOVE AND REPLACE EXISTING HOT WATER VALVES. EXISTING HOT WATER PIPING SHALL REMAIN. FIELD VERIFY EXISTING CONDITIONS.

6 ALL DUCTWORK, GRILLES, DIFFUSERS ARE TO BE REMOVED IN THESE AREA. FIELD VERIFY EXISTING CONDITIONS

7 REMOVE AIR HANDLING UNITS. CAP AND SEAL ALL CHILLED WATER LINES AND HOT WATER LINES NOT BEING REUSED. FIELD VERIFY EXISTING CONDITIONS

8 REMOVE EXHAUST FANS, GRILLES AND DUCTWORK. CAP AND SEAL ROOF CURB. FIELD VERIFY EXISTING CONDITIONS.

9 DEMO OF EQUIPMENT SHALL ONLY BE DONE IF THE ALTERNATES ARE ACCEPTED. DO NOT DEMO AREAS THAT ARE NOT ACCEPTED DURING BIDDING. REFER TO AREAS AND ADD ALTERNATES ON SHEET M-1.0.

1 M-1.1 MECHANICAL DEMO PLAN
3/32"=1'-0"

KEY PLAN

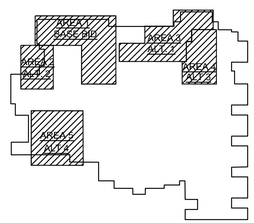

DBR
200 South 10th Street Suite 901
Mc Allen, Texas 78501
956.683.1640 p 956.683.1903 f
TBPE Firm Registration No. 2234

DBR Project Number 178007.000

AS	MG	JB	TL	–

PROJECT:
Starr County Memorial Hospital
MRI Addition and Renovation
128 N. FM Road 3167 Rio Grande City, Texas

DESIGN GROUP INTERNATIONAL
DELFINO GARZA JR., • ARCHITECT • 1701 MIER STREET • LAREDO, TEXAS 78043 • (956) 724-6268

STATE OF TEXAS
EDWARD PUENTES
102338
LICENSED
PROFESSIONAL ENGINEER

09/10/2018

SHEET
M-1.1

Plotted: Sep 7, 2018, 3:6 PM by user: mgarza - Saved: 9/7/2018 by user: mgarza
N:\17\178007.000\Drawings\0M-178007-1.dwg

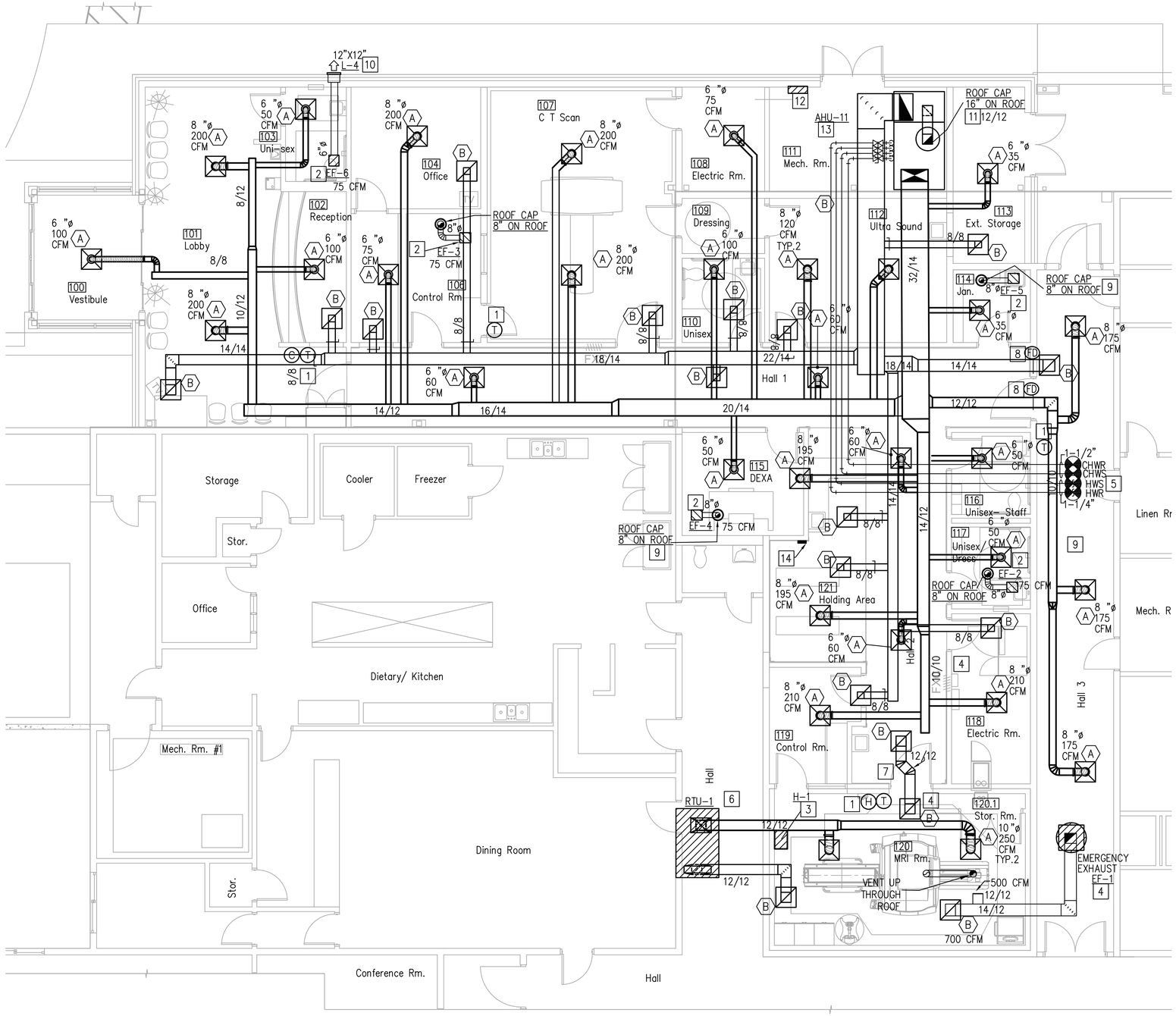

1 M-2.1 MECHANICAL PLAN - AREA 1 - BASE BID

3/16"=1'-0"

GENERAL MECHANICAL NOTES

A. THE DRAWINGS ARE DIAGRAMMATIC AND INDICATE THE GENERAL LOCATION OF EQUIPMENT, DUCTS, AND GRILLES ETC. IT IS THE INTENT OF THESE DRAWINGS AND SPECIFICATIONS THAT COMPLETE MECHANICAL SYSTEMS BE FURNISHED, INSTALLED, TESTED AND READY FOR OPERATION WHETHER OR NOT EVERY ITEM OF EQUIPMENT, ACCESSORY, DEVICE, ETC. IS SHOWN. REFERENCE SHALL BE MADE TO THE FULL DRAWING PACKAGE INCLUDING ARCHITECTURAL, STRUCTURAL, ELECTRICAL, AND PLUMBING DRAWINGS FOR COORDINATION AND POTENTIAL CONFLICTS. THE MECHANICAL SUBCONTRACTOR SHALL, WITHOUT EXTRA CHARGE, MAKE REASONABLE MODIFICATIONS IN THE LAYOUT AS NEEDED TO PREVENT CONFLICTS WITH OTHER TRADES, OR FOR PROPER EXECUTION OF THE WORK. FIELD VERIFY ALL DIMENSIONS BEFORE FABRICATING DUCTWORK.

B. DUCT DIMENSIONS INDICATED ON DRAWINGS ARE CLEAR INSIDE AIR STREAM DIMENSIONS.

C. ALL NEW A/C EQUIPMENT SHALL BE CLEANED AFTER THE FINISHING OF DRYWALL AND PRIOR TO THE RELEASE OF BUILDING TO OWNER. MECHANICAL CONTRACTOR TO PROVIDE DOCUMENTATION WITH DATE AND TIME OF UNIT CLEANING.

D. PROVIDE DUCT-MOUNTED SMOKE DETECTOR IN SUPPLY AND RETURN DUCT FOR AIR HANDLING UNITS SUPPLYING 2000 CFM AND GREATER.

E. ALL OUTSIDE AIR INTAKES SHALL BE 25 FEET MINIMUM FROM ALL VENTILATING SYSTEMS INCLUDING PLUMBING VENTS, EXHAUST SYSTEMS, AND COMBUSTION EQUIPMENT STACKS.

MECHANICAL KEYED NOTES

1 MOUNT TEMPERATURE SENSOR AT 48" A.F.F. COORDINATE WITH ARCHITECT AND ELECTRICAL CONTRACTOR. PROVIDE PROTECTIVE COVERING OVER TEMPERATURE SENSOR. TYPICAL.

2 PROVIDE CEILING MOUNTED EXHAUST FAN AS SCHEDULED. SUPPORT FAN FROM STRUCTURE ABOVE. INTERLOCK FAN WITH ASSOCIATED AIR HANDLING UNIT.

3 PROVIDE HUMIDIFIER AS SCHEDULED. COORDINATE POWER WITH ELECTRICAL CONTRACTOR. COORDINATE MAKE UP WATER LINE WITH PLUMBING CONTRACTOR. ROUTE CONDENSATE DRAIN LINE TO NEAREST JANITORS CLOSET.

4 PROVIDE EMERGENCY EXHAUST FAN FOR PURGE. FAN IS FOR MRI ROOM AND NEEDS PANIC BUTTON IN CONTROL ROOM AND BY EXIT OF THE MAGNET ROOM. COORDINATE EXACT LOCATION PRIOR TO INSTALLATION. PROVIDE WAVEGUIDE/DIELETRIC ISOLATORS WHERE DUCTWORK PENETRATED THE RF SHIELD IN THE SPACE. COORDINATE WITH MRI EQUIPMENT FOR ANY AND ALL REQUIREMENTS PRIOR TO BIDDING AND INSTALLATION.

5 ROUTE NEW CHILLED WATER LINES AND HOT WATER LINES AS SHOWN. CONNECT TO EXISTING CHILLED WATER LINES IN CORRIDOR. FIELD VERIFY EXACT LOCATIONS OF THE CHILLED WATER LINES PRIOR TO BIDDING AND INSTALLATIONS.

6 PROVIDE DX ROOF MOUNTED AIR HANDLING UNIT AS SCHEDULE. UNIT SERVES MRI SPACE ONLY. COORDINATE ANY REQUIREMENTS WITH MRI MANUFACTURER PRIOR TO INSTALLATION.

7 PROVIDE 12X12 TRANSFER DUCT FOR PURGE MODE.

8 PROVIDE FIRE DAMPER.

9 PROVIDE ROOF CAP FOR EXHAUST FANS. ROOF CAP SHALL BE SIMILAR TO COOK MODEL PR-8. PROVIDE ROOF CURB AND COORDINATE WITH ROOFING CONTRACTOR.

10 PROVIDE RUSKIN MODEL EME520DD. COORDINATE COLOR WITH ARCHITECT. SIZE ON PLAN. BOTTOM OF LOUVER TO BE 10'-0" A.F.F.

11 PROVIDE ROOF CAP AND CURB FOR OUTSIDE AIR INTAKE. ROOF CAP SHALL BE SIMILAR TO COOK MODEL PR-16. PROVIDE MOTORIZED DAMPER INTERLOCKED WITH AHU. PROVIDE AIR FLOW MONITORING STATION. EXTEND CURB AS REQUIRED TO LOCATE ROOF CAP INTAKE 3'-0" ABOVE THE ROOF LEVEL.

12 PROVIDE DDC CONTROL PANEL AND COORDINATE POWER WITH ELECTRICAL CONTRACTOR.

13 PROVIDE AIR HANDLING UNIT AS SCHEDULED. CHILLED WATER SUPPLY AND RETURN LINES SHALL BE 1.5" AND HOT WATER SUPPLY AND RETURNS SHALL BE 1.25". COORDINATE EXACT LOCATION TO TAP INTO EXISTING LINES. FIELD VERIFY PRIOR TO INSTALLATION. ROUTE CONDENSATE DRAIN TO NEAREST FLOOR DRAIN.

14 PROVIDE WALL-MOUNTED EMERGENCY SHUT DOWN SWITCH. SWITCH SHALL SHUT DOWN ALL AIR HANDLING UNITS/ROOF TOP UNITS.

KEY PLAN

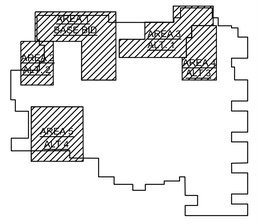

PROJECT:

Starr County Memorial Hospital

MRI Addition and Renovation

128 N. FM Road 3167 Rio Grande City, Texas

DESIGN GROUP INTERNATIONAL
DELFINO GARZA JR., • ARCHITECT • 1701 MIER STREET • LAREDO, TEXAS 78043 • (956) 724-6268

STATE OF TEXAS
EDWARD PUENTES
102338
LICENSED PROFESSIONAL ENGINEER

09/10/2018

DBR
200 South 10th Street Suite 901
Mc Allen, Texas 78501
956.683.1640 p 956.683.1903 f
TBPE Firm Registration No. 2234

DBR Project Number 178007.000

AS	MG	JB	TL	–

SHEET M-2.1

Plotted: Sep 7, 2018, 4:0 PM by user: mgarza - Saved: 9/7/2018 by user: mgarza
N:\17\178007.000\Drawings\0M-178007-1.dwg

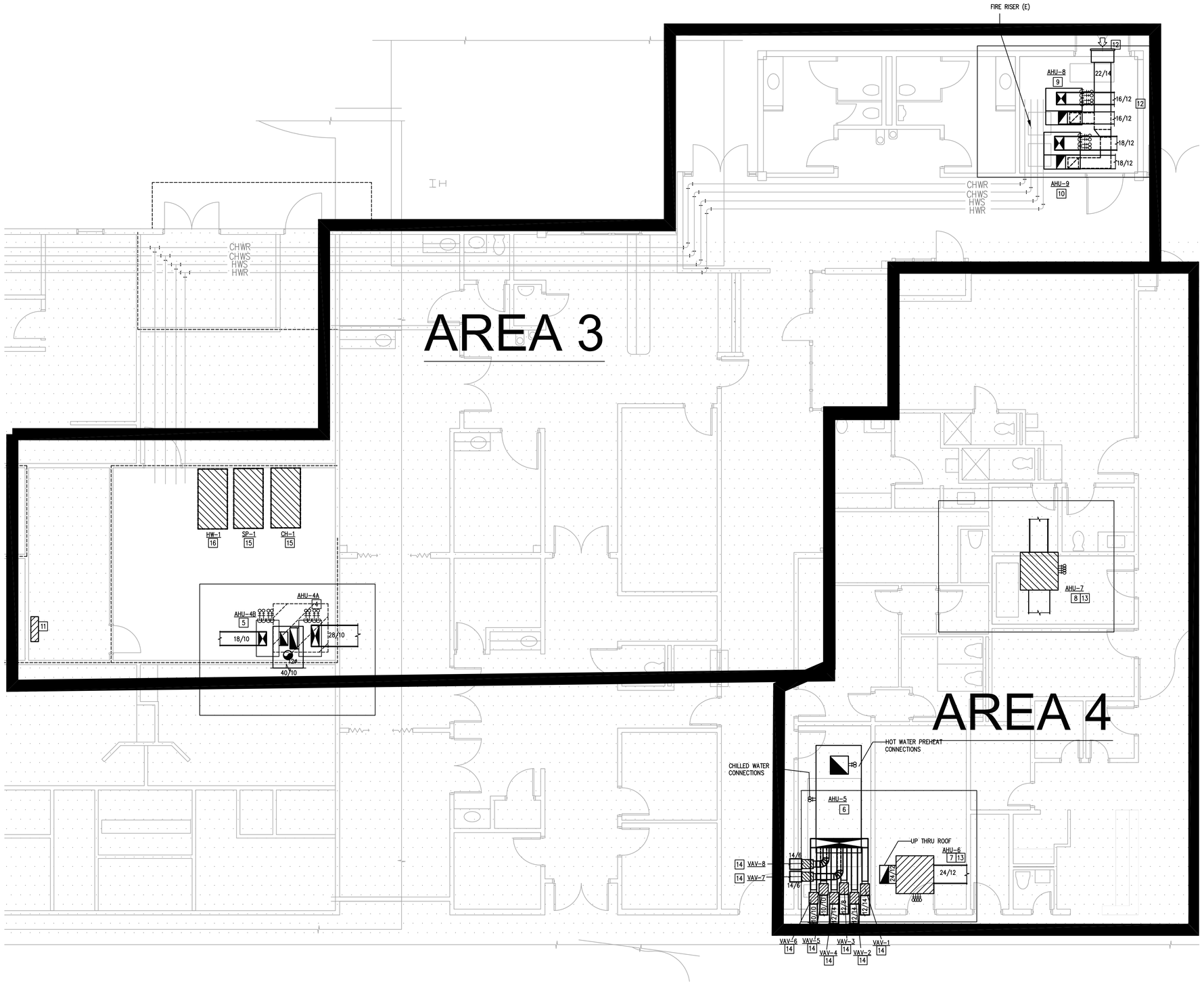

MECHANICAL GENERAL NOTES

A. COORDINATE DEMOLITION WORK WITH ELECTRICAL AND OTHER DISCIPLINES AS REQUIRED.

B. IT IS THE CONTRACTOR'S RESPONSIBILITY TO HAVE VERIFIED EXISTING JOBSITE CONDITIONS DURING THE BIDDING PERIOD, SO THEY WILL HAVE DISCOVERED THE FULL SCOPE OF WORK INVOLVED WITH THE MODIFICATION OF THIS EXISTING SPACE. THE SCOPE OF THE WORK SHALL INCLUDE ALL MATERIALS FOR A COMPLETE INSTALLATION INCLUDING DEVICES, EQUIPMENT, OR APPARATUS WHICH MUST BE REROUTED, RELOCATED, OR REMOVED EITHER TEMPORARILY OR PERMANENTLY, OR WHICH MUST BE PROVIDED TO ACCOMMODATE THE INDICATED REMODELING. NOT ALL EXISTING CONDITIONS ARE NECESSARILY INDICATED ON THE DRAWINGS. ALL HVAC SHOWN ARE TAKEN FROM AS-BUILT HARDCOPY AND MUST BE FIELD VERIFIED.

C. WHEN AN EQUIPMENT IS IDENTIFIED TO BE REMOVED, THE OWNER HAS FIRST RIGHT OF REFUSAL BEFORE DISPOSING OF THAT EQUIPMENT. PROVIDE DISTRICT ONE WEEK NOTICE PRIOR TO DEMOLITION.

D. PROVIDE ALL NECESSARY CLEAR PATH TO MOVE DEMOLISHED EQUIPMENT OUT OF THE FACILITY AS WELL TO BRING NEW EQUIPMENT INTO THE BUILDING. MODIFY EXISTING PIPING, DUCTWORK CONDUITS, AS REQUIRED TO COMPLETE THE DEMOLITION.

E. ALL OUTSIDE AIR INTAKES SHALL BE 25 FEET MINIMUM FROM ALL VENTILATING SYSTEMS INCLUDING PLUMBING VENTS, EXHAUST SYSTEMS, AND COMBUSTION EQUIPMENT STACKS.

MECHANICAL KEYED NOTES

1 PROVIDE NEW AIR HANDLING UNIT AS SCHEDULED. CONNECT TO EXISTING DUCTWORK AS SHOWN. SIZES ON PLAN. CONNECT OUTSIDE AIR DUCT TO RETURN PLENUM BOX. SIZE OF OUTSIDE AIR DUCT ON PLAN. CONNECT 1.25" CHILLED WATER SUPPLY AND RETURN TO EXISTING CHILLED WATER LINES. PROVIDE NEW VALVES AND ACCESSORIES. CONNECT 1" HOT WATER SUPPLY AND RETURN TO EXISTING CHILLED WATER LINES. PROVIDE NEW VALVES AND ACCESSORIES. REUSE EXISTING PROVIDE NEW HOUSEKEEPING PAD. CONNECT TO NEW DDC CONTROLS AND REPLACE EXISTING TSTAT AND HUMIDSTAT. FIELD VERIFY EXISTING CONDITIONS.

2 PROVIDE NEW AIR HANDLING UNIT AS SCHEDULED. CONNECT TO EXISTING DUCTWORK AS SHOWN. SIZES ON PLAN. CONNECT OUTSIDE AIR DUCT TO RETURN PLENUM BOX. SIZE OF OUTSIDE AIR DUCT ON PLAN. CONNECT 1.5" CHILLED WATER SUPPLY AND RETURN TO EXISTING CHILLED WATER LINES. PROVIDE NEW VALVES AND ACCESSORIES. CONNECT 1.25" HOT WATER SUPPLY AND RETURN TO EXISTING CHILLED WATER LINES. PROVIDE NEW VALVES AND ACCESSORIES. REUSE EXISTING PROVIDE NEW HOUSEKEEPING PAD. CONNECT TO NEW DDC CONTROLS AND REPLACE EXISTING TSTAT AND HUMIDSTAT. FIELD VERIFY EXISTING CONDITIONS.

3 PROVIDE NEW AIR HANDLING UNIT AS SCHEDULED. CONNECT TO EXISTING DUCTWORK AS SHOWN. SIZES ON PLAN. CONNECT OUTSIDE AIR DUCT TO RETURN PLENUM BOX. SIZE OF OUTSIDE AIR DUCT ON PLAN. CONNECT 1.25" CHILLED WATER SUPPLY AND RETURN TO EXISTING CHILLED WATER LINES. PROVIDE NEW VALVES AND ACCESSORIES. CONNECT 1" HOT WATER SUPPLY AND RETURN TO EXISTING CHILLED WATER LINES. PROVIDE NEW VALVES AND ACCESSORIES. REUSE EXISTING PROVIDE NEW HOUSEKEEPING PAD. CONNECT TO NEW DDC CONTROLS AND REPLACE EXISTING TSTAT AND HUMIDSTAT. FIELD VERIFY EXISTING CONDITIONS.

4 PROVIDE NEW AIR HANDLING UNIT AS SCHEDULED. CONNECT TO EXISTING DUCTWORK AS SHOWN. SIZES ON PLAN. CONNECT OUTSIDE AIR DUCT TO RETURN PLENUM BOX. SIZE OF OUTSIDE AIR DUCT ON PLAN. CONNECT 1.25" CHILLED WATER SUPPLY AND RETURN TO EXISTING CHILLED WATER LINES. PROVIDE NEW VALVES AND ACCESSORIES. CONNECT 1.25" HOT WATER SUPPLY AND RETURN TO EXISTING CHILLED WATER LINES. PROVIDE NEW VALVES AND ACCESSORIES. REUSE EXISTING PROVIDE NEW HOUSEKEEPING PAD. CONNECT TO NEW DDC CONTROLS AND REPLACE EXISTING TSTAT AND HUMIDSTAT. FIELD VERIFY EXISTING CONDITIONS..

5 PROVIDE NEW AIR HANDLING UNIT AS SCHEDULED. CONNECT TO EXISTING DUCTWORK AS SHOWN. SIZES ON PLAN. CONNECT OUTSIDE AIR DUCT TO RETURN PLENUM BOX. SIZE OF OUTSIDE AIR DUCT ON PLAN. CONNECT 1" CHILLED WATER SUPPLY AND RETURN TO EXISTING CHILLED WATER LINES. PROVIDE NEW VALVES AND ACCESSORIES. CONNECT 1" HOT WATER SUPPLY AND RETURN TO EXISTING CHILLED WATER LINES. PROVIDE NEW VALVES AND ACCESSORIES. REUSE EXISTING PROVIDE NEW HOUSEKEEPING PAD. CONNECT TO NEW DDC CONTROLS AND REPLACE EXISTING TSTAT AND HUMIDSTAT. FIELD VERIFY EXISTING CONDITIONS.

6 PROVIDE NEW AIR HANDLING UNIT AS SCHEDULED. UNIT TO USE HEPA FILTERS FOR THE OPERATING ROOM. CONNECT TO EXISTING DUCTWORK AS SHOWN. SIZES ON PLAN. CONNECT OUTSIDE AIR DUCT TO RETURN PLENUM BOX. SIZE OF OUTSIDE AIR DUCT ON PLAN. CONNECT 3" CHILLED WATER SUPPLY AND RETURN TO EXISTING CHILLED WATER LINES. PROVIDE NEW VALVES AND ACCESSORIES. CONNECT 1.5" HOT WATER SUPPLY AND RETURN TO EXISTING CHILLED WATER LINES. PROVIDE NEW VALVES AND ACCESSORIES. REUSE EXISTING PROVIDE NEW HOUSEKEEPING PAD. CONNECT TO NEW DDC CONTROLS AND REPLACE EXISTING TSTAT AND HUMIDSTAT. FIELD VERIFY EXISTING CONDITIONS.

7 PROVIDE NEW AIR HANDLING UNIT AS SCHEDULED. CONNECT TO EXISTING DUCTWORK AS SHOWN. SIZES ON PLAN. CONNECT OUTSIDE AIR DUCT TO RETURN PLENUM BOX. SIZE OF OUTSIDE AIR DUCT ON PLAN. CONNECT 3" CHILLED WATER SUPPLY AND RETURN TO EXISTING CHILLED WATER LINES. PROVIDE NEW VALVES AND ACCESSORIES. CONNECT 1" HOT WATER SUPPLY AND RETURN TO EXISTING CHILLED WATER LINES. PROVIDE NEW VALVES AND ACCESSORIES. REUSE EXISTING PROVIDE NEW HOUSEKEEPING PAD. CONNECT TO NEW DDC CONTROLS AND REPLACE EXISTING TSTAT AND HUMIDSTAT. FIELD VERIFY EXISTING CONDITIONS.

8 PROVIDE NEW AIR HANDLING UNIT AS SCHEDULED. CONNECT TO EXISTING DUCTWORK AS SHOWN. SIZES ON PLAN. CONNECT OUTSIDE AIR DUCT TO RETURN PLENUM BOX. SIZE OF OUTSIDE AIR DUCT ON PLAN. CONNECT 0.75" CHILLED WATER SUPPLY AND RETURN TO EXISTING CHILLED WATER LINES. PROVIDE NEW VALVES AND ACCESSORIES. CONNECT 0.5" HOT WATER SUPPLY AND RETURN TO EXISTING CHILLED WATER LINES. PROVIDE NEW VALVES AND ACCESSORIES. REUSE EXISTING PROVIDE NEW HOUSEKEEPING PAD. CONNECT TO NEW DDC CONTROLS AND REPLACE EXISTING TSTAT AND HUMIDSTAT. FIELD VERIFY EXISTING CONDITIONS.

9 PROVIDE NEW AIR HANDLING UNIT AS SCHEDULED. CONNECT TO EXISTING DUCTWORK AS SHOWN. SIZES ON PLAN. CONNECT OUTSIDE AIR DUCT TO RETURN PLENUM BOX. SIZE OF OUTSIDE AIR DUCT ON PLAN. CONNECT 2" CHILLED WATER SUPPLY AND RETURN TO EXISTING CHILLED WATER LINES. PROVIDE NEW VALVES AND ACCESSORIES. CONNECT 1" HOT WATER SUPPLY AND RETURN TO EXISTING CHILLED WATER LINES. PROVIDE NEW VALVES AND ACCESSORIES. REUSE EXISTING PROVIDE NEW HOUSEKEEPING PAD. CONNECT TO NEW DDC CONTROLS AND REPLACE EXISTING TSTAT AND HUMIDSTAT. FIELD VERIFY EXISTING CONDITIONS.

10 PROVIDE NEW AIR HANDLING UNIT AS SCHEDULED. CONNECT TO EXISTING DUCTWORK AS SHOWN. SIZES ON PLAN. CONNECT OUTSIDE AIR DUCT TO RETURN PLENUM BOX. SIZE OF OUTSIDE AIR DUCT ON PLAN. CONNECT 2" CHILLED WATER SUPPLY AND RETURN TO EXISTING CHILLED WATER LINES. PROVIDE NEW VALVES AND ACCESSORIES. CONNECT 1.25" HOT WATER SUPPLY AND RETURN TO EXISTING CHILLED WATER LINES. PROVIDE NEW VALVES AND ACCESSORIES. REUSE EXISTING PROVIDE NEW HOUSEKEEPING PAD. CONNECT TO NEW DDC CONTROLS AND REPLACE EXISTING TSTAT AND HUMIDSTAT. FIELD VERIFY EXISTING CONDITIONS.

11 PROVIDE NEW AIR HANDLING UNIT AS SCHEDULED. CONNECT TO EXISTING DUCTWORK AS SHOWN. SIZES ON PLAN. CONNECT OUTSIDE AIR DUCT TO RETURN PLENUM BOX. SIZE OF OUTSIDE AIR DUCT ON PLAN. CONNECT 1.5" CHILLED WATER SUPPLY AND RETURN TO EXISTING CHILLED WATER LINES. PROVIDE NEW VALVES AND ACCESSORIES. CONNECT 1.25" HOT WATER SUPPLY AND RETURN TO EXISTING CHILLED WATER LINES. PROVIDE NEW VALVES AND ACCESSORIES. REUSE EXISTING PROVIDE NEW HOUSEKEEPING PAD. CONNECT TO NEW DDC CONTROLS AND REPLACE EXISTING TSTAT AND HUMIDSTAT. FIELD VERIFY EXISTING CONDITIONS.

11 PROVIDE NEW DDC CONTROLS.

12 RELOCATE EXISTING LOUVER AND CONNECT NEW OUTSIDE AIR DUCT TO UNITS. PROVIDE VOLUME DAMPERS AND AIR FLOW MONITORING STATIONS FOR EACH AIR HANDLER. COORDINATE LOUVER PENETRATION WITH ARCHITECT. SEAL EXISTING PENETRATION WHERE LOUVER WAS LOCATED AND MATCH AS BEST AS POSSIBLE WITH SIMILAR MATERIALS. MATCH COLORS. FIELD VERIFY EXISTING CONDITIONS.

13 UNITS ABOVE CEILING WILL REQUIRE THAT THE CEILING BE REMOVED. COORDINATE PRIOR TO REMOVING OLD UNITS AND REPLACING WITH NEW UNITS. IF CEILINGS ARE HARD GYPSUM CEILING, CONTRACTOR TO REPAIR AND LEAVE IN NEW CONDITIONS WITH SIMILAR MATERIALS THAT WERE EXISTING. MATCH COLORS. FIELD VERIFY EXISTING CONDITIONS.

14 PROVIDE SINGLE DUCT VAV BOXES AS SCHEDULED. PROVIDE HOT WATER COILS FOR REHEAT. COIL CONNECTIONS SHALL BE ON THE BOTTOM OF THE VAV BOX FOR CONNECTIONS. CONTROLS BOX SHALL BE ON THE UNDERSIDE OF THE VAV BOX FOR CLEARANCE. CONNECT TO EXISTING DUCTWORK AND TRANSITION AS NEEDED. REPLACE EXISTING TSTAT AND HUMIDSTAT WITH NEW TSTATS AND HUMIDSTAT. PROVIDE NEW DDC CONTROLS FOR VAV BOXES TO REPLACE EXISTING PNEUMATIC CONTROLS. FIELD VERIFY EXISTING CONDITIONS.

15 PROVIDE NEW CHILLED WATER PUMP. USE EXISTING HOUSEKEEPING PAD. PROVIDE NEW VALVES AND INSULATION. COORDINATE WITH ELECTRICAL CONTRACTOR FOR POWER. B ALANCE GPM VALUES ONCE DONE.

16 PROVIDE NEW HOT WATER PUMP. USE EXISTING HOUSEKEEPING PAD. PROVIDE NEW VALVES AND INSULATION. COORDINATE WITH ELECTRICAL CONTRACTOR FOR POWER. BALANCE GPM VALUES ONCE DONE.

KEY PLAN

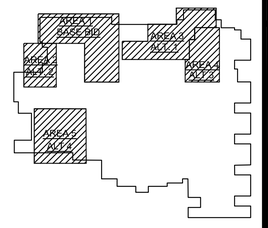

1 M-2.2 MECHANICAL PLAN - ADD ALTERNATES 1 AND 3

3/16"=1'-0"

PROJECT:

Starr County Memorial Hospital

MRI Addition and Renovation

128 N. FM Road 3167 Rio Grande City, Texas

DESIGN GROUP INTERNATIONAL

DELFINO GARZA JR., • ARCHITECT • 1701 MIER STREET • LAREDO, TEXAS 78043 • (956) 724-6268

STATE OF TEXAS
EDWARD PUENTES
102338
LICENSED
PROFESSIONAL ENGINEER

09/10/2018

DBR
200 South 10th Street Suite 901
Mc Allen, Texas 78501
956.683.1640 p 956.683.1903 f
TBPE Firm Registration No. 2234

DBR Project Number	178007.000			
AS	MG	JB	TL	–

SHEET

M-2.2

Plotted: Sep 7, 2018, 4:1 PM by user: mgarza - Saved: 9/7/2018 by user: mgarza
N:\17\178007.000\Drawings\0M-178007-1.dwg

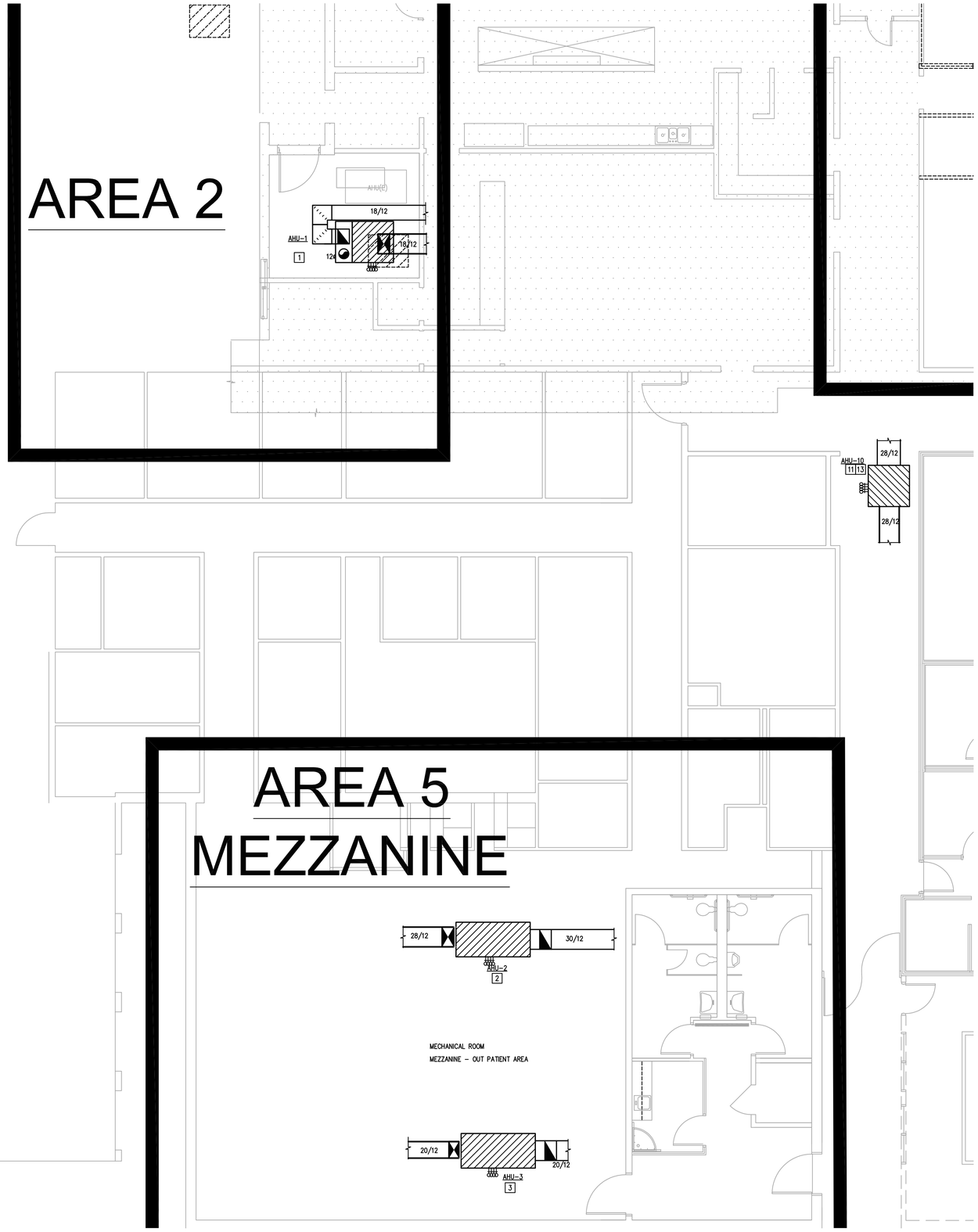

1 M-2.3 **MECHANICAL PLAN - ADD ALTERNATES 2 AND 4**

3/16"=1'-0"

MECHANICAL GENERAL NOTES

A. COORDINATE DEMOLITION WORK WITH ELECTRICAL AND OTHER DISCIPLINES AS REQUIRED.

B. IT IS THE CONTRACTOR'S RESPONSIBILITY TO HAVE VERIFIED EXISTING JOBSITE CONDITIONS DURING THE BIDDING PERIOD, SO THEY WILL HAVE DISCOVERED THE FULL SCOPE OF WORK INVOLVED WITH THE MODIFICATION OF THIS EXISTING SPACE. THE SCOPE OF THE WORK SHALL INCLUDE ALL MATERIALS FOR A COMPLETE INSTALLATION INCLUDING DEVICES, EQUIPMENT, OR APPARATUS WHICH MUST BE REROUTED, RELOCATED, OR REMOVED EITHER TEMPORARILY OR PERMANENTLY, OR WHICH MUST BE PROVIDED TO ACCOMMODATE THE INDICATED REMODELING. NOT ALL EXISTING CONDITIONS ARE NECESSARILY INDICATED ON THE DRAWINGS. ALL HVAC SHOWN ARE TAKEN FROM AS-BUILT HARDCOPY AND MUST BE FIELD VERIFIED.

C. WHEN AN EQUIPMENT IS IDENTIFIED TO BE REMOVED, THE OWNER HAS FIRST RIGHT OF REFUSAL BEFORE DISPOSING OF THAT EQUIPMENT. PROVIDE DISTRICT ONE WEEK NOTICE PRIOR TO DEMOLITION.

D. PROVIDE ALL NECESSARY CLEAR PATH TO MOVE DEMOLISHED EQUIPMENT OUT OF THE FACILITY AS WELL TO BRING NEW EQUIPMENT INTO THE BUILDING. MODIFY EXISTING PIPING, DUCTWORK CONDUITS, AS REQUIRED TO COMPLETE THE DEMOLITION.

E. ALL OUTSIDE AIR INTAKES SHALL BE 25 FEET MINIMUM FROM ALL VENTILATING SYSTEMS INCLUDING PLUMBING VENTS, EXHAUST SYSTEMS, AND COMBUSTION EQUIPMENT STACKS.

MECHANICAL KEYED NOTES

1 PROVIDE NEW AIR HANDLING UNIT AS SCHEDULED. CONNECT TO EXISTING DUCTWORK AS SHOWN. SIZES ON PLAN. CONNECT OUTSIDE AIR DUCT TO RETURN PLENUM BOX. SIZE OF OUTSIDE AIR DUCT ON PLAN. CONNECT 1.25" CHILLED WATER SUPPLY AND RETURN TO EXISTING CHILLED WATER LINES. PROVIDE NEW VALVES AND ACCESSORIES. CONNECT 1" HOT WATER SUPPLY AND RETURN TO EXISTING CHILLED WATER LINES. PROVIDE NEW VALVES AND ACCESSORIES. REUSE EXISTING PROVIDE NEW HOUSEKEEPING PAD. CONNECT TO NEW DDC CONTROLS AND REPLACE EXISTING TSTAT AND HUMIDISTAT. FIELD VERIFY EXISTING CONDITIONS.

2 PROVIDE NEW AIR HANDLING UNIT AS SCHEDULED. CONNECT TO EXISTING DUCTWORK AS SHOWN. SIZES ON PLAN. CONNECT OUTSIDE AIR DUCT TO RETURN PLENUM BOX. SIZE OF OUTSIDE AIR DUCT ON PLAN. CONNECT 1.5" CHILLED WATER SUPPLY AND RETURN TO EXISTING CHILLED WATER LINES. PROVIDE NEW VALVES AND ACCESSORIES. CONNECT 1.25" HOT WATER SUPPLY AND RETURN TO EXISTING CHILLED WATER LINES. PROVIDE NEW VALVES AND ACCESSORIES. REUSE EXISTING PROVIDE NEW HOUSEKEEPING PAD. CONNECT TO NEW DDC CONTROLS AND REPLACE EXISTING TSTAT AND HUMIDISTAT. FIELD VERIFY EXISTING CONDITIONS.

3 PROVIDE NEW AIR HANDLING UNIT AS SCHEDULED. CONNECT TO EXISTING DUCTWORK AS SHOWN. SIZES ON PLAN. CONNECT OUTSIDE AIR DUCT TO RETURN PLENUM BOX. SIZE OF OUTSIDE AIR DUCT ON PLAN. CONNECT 1.25" CHILLED WATER SUPPLY AND RETURN TO EXISTING CHILLED WATER LINES. PROVIDE NEW VALVES AND ACCESSORIES. CONNECT 1" HOT WATER SUPPLY AND RETURN TO EXISTING CHILLED WATER LINES. PROVIDE NEW VALVES AND ACCESSORIES. REUSE EXISTING PROVIDE NEW HOUSEKEEPING PAD. CONNECT TO NEW DDC CONTROLS AND REPLACE EXISTING TSTAT AND HUMIDISTAT. FIELD VERIFY EXISTING CONDITIONS.

4 PROVIDE NEW AIR HANDLING UNIT AS SCHEDULED. CONNECT TO EXISTING DUCTWORK AS SHOWN. SIZES ON PLAN. CONNECT OUTSIDE AIR DUCT TO RETURN PLENUM BOX. SIZE OF OUTSIDE AIR DUCT ON PLAN. CONNECT 1.25" CHILLED WATER SUPPLY AND RETURN TO EXISTING CHILLED WATER LINES. PROVIDE NEW VALVES AND ACCESSORIES. CONNECT 1.25" HOT WATER SUPPLY AND RETURN TO EXISTING CHILLED WATER LINES. PROVIDE NEW VALVES AND ACCESSORIES. REUSE EXISTING PROVIDE NEW HOUSEKEEPING PAD. CONNECT TO NEW DDC CONTROLS AND REPLACE EXISTING TSTAT AND HUMIDISTAT. FIELD VERIFY EXISTING CONDITIONS..

5 PROVIDE NEW AIR HANDLING UNIT AS SCHEDULED. CONNECT TO EXISTING DUCTWORK AS SHOWN. SIZES ON PLAN. CONNECT OUTSIDE AIR DUCT TO RETURN PLENUM BOX. SIZE OF OUTSIDE AIR DUCT ON PLAN. CONNECT 1" CHILLED WATER SUPPLY AND RETURN TO EXISTING CHILLED WATER LINES. PROVIDE NEW VALVES AND ACCESSORIES. CONNECT 1" HOT WATER SUPPLY AND RETURN TO EXISTING CHILLED WATER LINES. PROVIDE NEW VALVES AND ACCESSORIES. REUSE EXISTING PROVIDE NEW HOUSEKEEPING PAD. CONNECT TO NEW DDC CONTROLS AND REPLACE EXISTING TSTAT AND HUMIDISTAT. FIELD VERIFY EXISTING CONDITIONS.

6 PROVIDE NEW AIR HANDLING UNIT AS SCHEDULED. UNIT TO USE HEPA FILTERS FOR THE OPERATING ROOM. CONNECT TO EXISTING DUCTWORK AS SHOWN. SIZES ON PLAN. CONNECT OUTSIDE AIR DUCT TO RETURN PLENUM BOX. SIZE OF OUTSIDE AIR DUCT ON PLAN. CONNECT 3" CHILLED WATER SUPPLY AND RETURN TO EXISTING CHILLED WATER LINES. PROVIDE NEW VALVES AND ACCESSORIES. CONNECT 1.5" HOT WATER SUPPLY AND RETURN TO EXISTING CHILLED WATER LINES. PROVIDE NEW VALVES AND ACCESSORIES. REUSE EXISTING PROVIDE NEW HOUSEKEEPING PAD. CONNECT TO NEW DDC CONTROLS AND REPLACE EXISTING TSTAT AND HUMIDISTAT. FIELD VERIFY EXISTING CONDITIONS.

7 PROVIDE NEW AIR HANDLING UNIT AS SCHEDULED. CONNECT TO EXISTING DUCTWORK AS SHOWN. SIZES ON PLAN. CONNECT OUTSIDE AIR DUCT TO RETURN PLENUM BOX. SIZE OF OUTSIDE AIR DUCT ON PLAN. CONNECT 2" CHILLED WATER SUPPLY AND RETURN TO EXISTING CHILLED WATER LINES. PROVIDE NEW VALVES AND ACCESSORIES. CONNECT 1" HOT WATER SUPPLY AND RETURN TO EXISTING CHILLED WATER LINES. PROVIDE NEW VALVES AND ACCESSORIES. REUSE EXISTING PROVIDE NEW HOUSEKEEPING PAD. CONNECT TO NEW DDC CONTROLS AND REPLACE EXISTING TSTAT AND HUMIDISTAT. FIELD VERIFY EXISTING CONDITIONS..

8 PROVIDE NEW AIR HANDLING UNIT AS SCHEDULED. CONNECT TO EXISTING DUCTWORK AS SHOWN. SIZES ON PLAN. CONNECT OUTSIDE AIR DUCT TO RETURN PLENUM BOX. SIZE OF OUTSIDE AIR DUCT ON PLAN. CONNECT 0.75" CHILLED WATER SUPPLY AND RETURN TO EXISTING CHILLED WATER LINES. PROVIDE NEW VALVES AND ACCESSORIES. CONNECT 0.5" HOT WATER SUPPLY AND RETURN TO EXISTING CHILLED WATER LINES. PROVIDE NEW VALVES AND ACCESSORIES. REUSE EXISTING PROVIDE NEW HOUSEKEEPING PAD. CONNECT TO NEW DDC CONTROLS AND REPLACE EXISTING TSTAT AND HUMIDISTAT. FIELD VERIFY EXISTING CONDITIONS.

9 PROVIDE NEW AIR HANDLING UNIT AS SCHEDULED. CONNECT TO EXISTING DUCTWORK AS SHOWN. SIZES ON PLAN. CONNECT OUTSIDE AIR DUCT TO RETURN PLENUM BOX. SIZE OF OUTSIDE AIR DUCT ON PLAN. CONNECT 2" CHILLED WATER SUPPLY AND RETURN TO EXISTING CHILLED WATER LINES. PROVIDE NEW VALVES AND ACCESSORIES. CONNECT 1" HOT WATER SUPPLY AND RETURN TO EXISTING CHILLED WATER LINES. PROVIDE NEW VALVES AND ACCESSORIES. REUSE EXISTING PROVIDE NEW HOUSEKEEPING PAD. CONNECT TO NEW DDC CONTROLS AND REPLACE EXISTING TSTAT AND HUMIDISTAT. FIELD VERIFY EXISTING CONDITIONS.

10 PROVIDE NEW AIR HANDLING UNIT AS SCHEDULED. CONNECT TO EXISTING DUCTWORK AS SHOWN. SIZES ON PLAN. CONNECT OUTSIDE AIR DUCT TO RETURN PLENUM BOX. SIZE OF OUTSIDE AIR DUCT ON PLAN. CONNECT 2" CHILLED WATER SUPPLY AND RETURN TO EXISTING CHILLED WATER LINES. PROVIDE NEW VALVES AND ACCESSORIES. CONNECT 1.25" HOT WATER SUPPLY AND RETURN TO EXISTING CHILLED WATER LINES. PROVIDE NEW VALVES AND ACCESSORIES. REUSE EXISTING PROVIDE NEW HOUSEKEEPING PAD. CONNECT TO NEW DDC CONTROLS AND REPLACE EXISTING TSTAT AND HUMIDISTAT. FIELD VERIFY EXISTING CONDITIONS.

11 PROVIDE NEW AIR HANDLING UNIT AS SCHEDULED. CONNECT TO EXISTING DUCTWORK AS SHOWN. SIZES ON PLAN. CONNECT OUTSIDE AIR DUCT TO RETURN PLENUM BOX. SIZE OF OUTSIDE AIR DUCT ON PLAN. CONNECT 1.5" CHILLED WATER SUPPLY AND RETURN TO EXISTING CHILLED WATER LINES. PROVIDE NEW VALVES AND ACCESSORIES. CONNECT 1.25" HOT WATER SUPPLY AND RETURN TO EXISTING CHILLED WATER LINES. PROVIDE NEW VALVES AND ACCESSORIES. REUSE EXISTING PROVIDE NEW HOUSEKEEPING PAD. CONNECT TO NEW DDC CONTROLS AND REPLACE EXISTING TSTAT AND HUMIDISTAT. FIELD VERIFY EXISTING CONDITIONS.

11 PROVIDE NEW DDC CONTROLS.

12 RELOCATE EXISTING LOUVER AND CONNECT NEW OUTSIDE AIR DUCT TO UNITS. PROVIDE VOLUME DAMPERS AND AIR FLOW MONITORING STATIONS FOR EACH AIR HANDLER. COORDINATE LOUVER PENETRATION WITH ARCHITECT. SEAL EXISTING PENETRATION WHERE LOUVER WAS LOCATED AND MATCH AS BEST AS POSSIBLE WITH SIMILAR MATERIALS. MATCH COLORS. FIELD VERIFY EXISTING CONDITIONS.

13 UNITS ABOVE CEILING WILL REQUIRE THAT THE CEILING BE REMOVED. COORDINATE PRIOR TO REMOVING OLD UNITS AND REPLACING WITH NEW UNITS. IF CEILINGS ARE HARD GYPSUM CEILING, CONTRACTOR TO REPAIR AND LEAVE IN NEW CONDITIONS WITH SIMILAR MATERIALS THAT WERE EXISTING. MATCH COLORS. FIELD VERIFY EXISTING CONDITIONS.

14 PROVIDE SINGLE DUCT VAV BOXES AS SCHEDULED. PROVIDE HOT WATER COILS FOR REHEAT. COIL CONNECTIONS SHALL BE ON THE BOTTOM OF THE VAV BOX FOR CONNECTIONS. CONTROLS BOX SHALL BE ON THE UNDERSIDE OF THE VAV BOX FOR CLEARANCE. CONNECT TO EXISTING DUCTWORK AND TRANSITION AS NEEDED. REPLACE EXISTING TSTAT AND HUMIDISTAT WITH NEW TSTATS AND HUMIDISTAT. PROVIDE NEW DDC CONTROLS FOR VAV BOXES TO REPLACE EXISTING PNEUMATIC CONTROLS. FIELD VERIFY EXISTING CONDITIONS.

15 PROVIDE NEW CHILLED WATER PUMP. USE EXISTING HOUSEKEEPING PAD. PROVIDE NEW VALVES AND INSULATION. COORDINATE WITH ELECTRICAL CONTRACTOR FOR POWER. B ALANCE GPM VALUES ONCE DONE.

16 PROVIDE NEW HOT WATER PUMP. USE EXISTING HOUSEKEEPING PAD. PROVIDE NEW VALVES AND INSULATION. COORDINATE WITH ELECTRICAL CONTRACTOR FOR POWER. BALANCE GPM VALUES ONCE DONE.

KEY PLAN

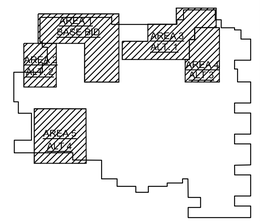

PROJECT:

Starr County Memorial Hospital

MRI Addition and Renovation

128 N. FM Road 3167 Rio Grande City, Texas

DESIGN GROUP INTERNATIONAL
DELFINO GARZA JR., • ARCHITECT • 1701 MIER STREET • LAREDO, TEXAS 78043 • (956) 724-6268

STATE OF TEXAS
EDWARD PUENTES
102338
LICENSED PROFESSIONAL ENGINEER

09/10/2018

DBR
200 South 10th Street Suite 901
Mc Allen, Texas 78501
956.683.1640 p 956.683.1903 f
TBPE Firm Registration No. 2234

DBR Project Number 178007.000

AS	MG	JB	TL	–

SHEET **M-2.3**

Plotted: Sep 7, 2018, 4:2 PM by user: mgarza - Saved: 9/7/2018 by user: mgarza
N:\17\178007.000\Drawings\0M-178007-1.dwg

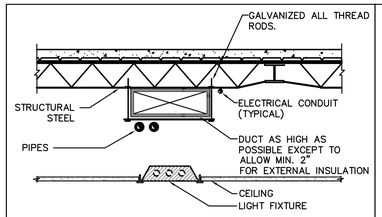

NOTES:

1. PIPES (INCLUDING SPRINKLER PIPING) AND ELECTRICAL CONDUIT CAN BE ROUTED BETWEEN JOISTS OR THROUGH JOIST WEB SPACE AS REQUIRED. DUCT SHALL BE LOCATED AS HIGH AS POSSIBLE.
2. U.L. DESIGN ASSEMBLY NUMBERS ARE SHOWN ON ARCHITECTURAL PLANS WHEN REQUIRED.
3. INSTALLATION OF ALL SERVICES MUST BE COORDINATED BY THE CONTRACTOR.

1 TYP. MEP INSTALLATION DETAIL
NOT TO SCALE

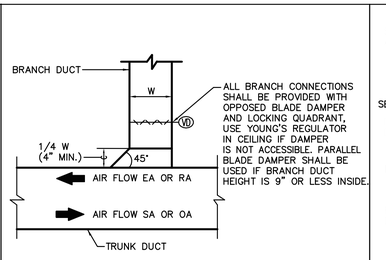

NOTE: THIS CONNECTION SHALL BE TYPICAL FOR ALL RECTANGULAR BRANCH DUCT CONNECTIONS TO RECTANGULAR TRUNK DUCTS, INCLUDING SUPPLY, RETURN, OUTSIDE AIR AND EXHAUST DUCTS.

2 RECTANGULAR BRANCH DUCT TAP
NOT TO SCALE

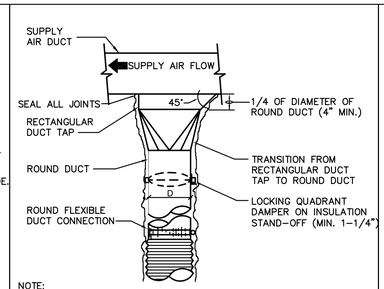

NOTE:
SEE FLOOR PLAN FOR SIZES

3 RECTANGULAR TAP TO ROUND TRANSITION
NOT TO SCALE

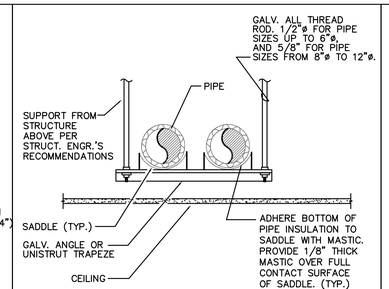

NOTE: CONTRACTOR SHALL SECURE STRUCT. ENGR. APPROVAL FOR ANY AND ALL PIPE MOUNTING DETAILS TO CONCRETE OR STEEL STRUCTURE.

4 PIPE HANGER DETAIL
NOT TO SCALE MPHS103.DWG

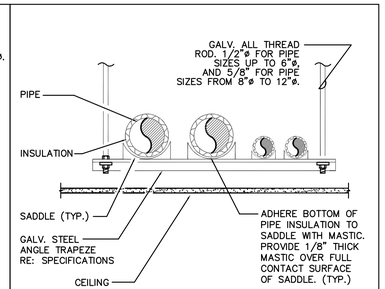

NOTE: CONTRACTOR SHALL SECURE STRUCT. ENG. APPROVAL FOR ANY AND ALL PIPE MOUNTING DETAILS AT CONCRETE OR STEEL STRUCTURE.

5 PIPE HANGER DETAIL (4-PIPE)
NOT TO SCALE MPHS101.DWG

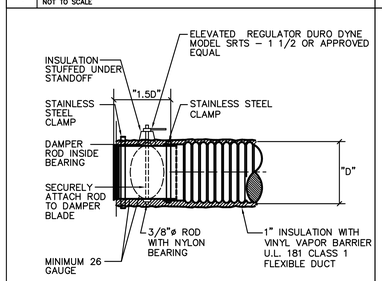

NOTE: 1. ALL FLEXIBLE DUCT OFFSETS AND BENDS SHALL MAINTAIN A RADIUS OF 1.5 X ("D") MINIMUM 3'-0" AND MAXIMUM 6'-0"
2.TYPICAL OF ROUND DUCT CONNECTIONS TO RECTANGULAR DUCTS
3.ALL JOINTS SHALL BE SEALED WITH MASTIC AND FIBER CLOTH PER SPECIFICATIONS.

6 SPIN-IN DETAIL
NOT TO SCALE

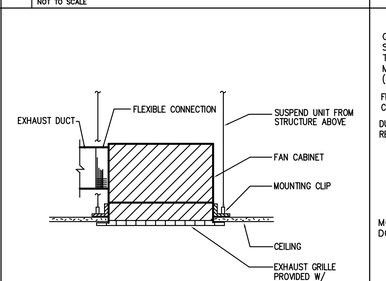

NOTE: PROVIDE FAN U.L RADIATION DAMPER FOR FIRE RATED CEILING.

7 CEILING MOUNTED EXHAUST FAN
NOT TO SCALE

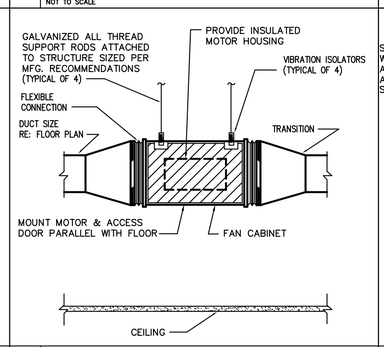

8 IN-LINE EXHAUST FAN DETAIL
NOT TO SCALE

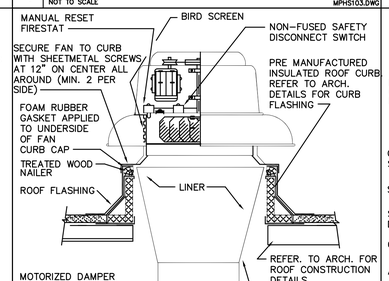

9 CENTRIFUGAL ROOF EXHAUST FAN
NOT TO SCALE MEFA100.DWG

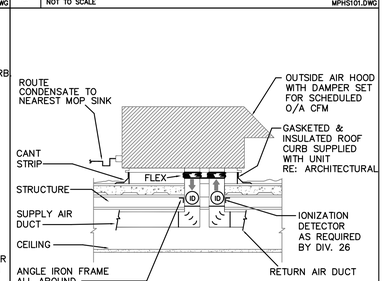

NOTE: ALL CONDENSATE DRAIN PIPING SHALL BE SCHEDULE 40 GALVANIZED STEEL WITH MALLEABLE IRON SCREWED FITTINGS.

10 ROOF TOP UNIT MOUNTING DETAIL
NOT TO SCALE MERT100.DWG

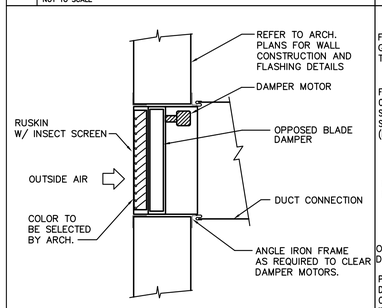

11 INTAKE LOUVER MOUNTING
NOT TO SCALE

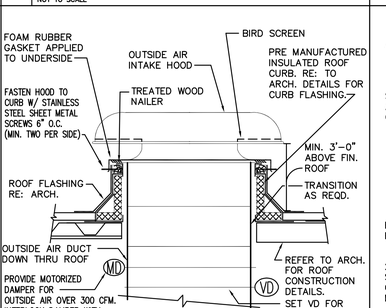

12 OUTSIDE AIR INTAKE HOOD
NOT TO SCALE MADT103.DWG

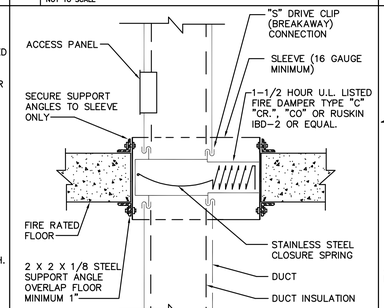

NOTE: INSTALL FIRE DAMPERS AS PER MANUFACTURER'S INSTALLATION INSTRUCTIONS.

13 VERTICAL FIRE DAMPER
NOT TO SCALE

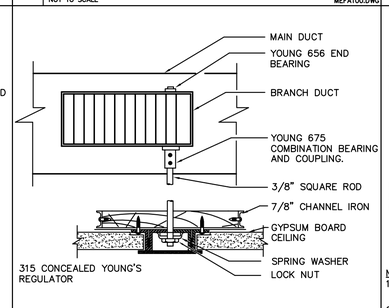

14 YOUNG'S REGULATOR OPERATOR
NOT TO SCALE

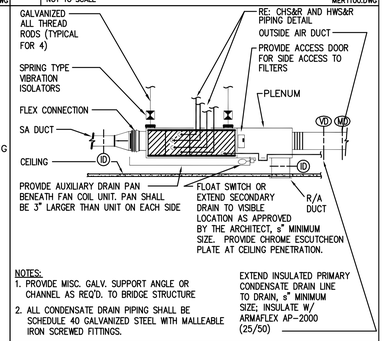

NOTES:
1. PROVIDE MISC. GALV. SUPPORT ANGLE OR CHANNEL AS REQ'D. TO BRIDGE STRUCTURE
2. ALL CONDENSATE DRAIN PIPING SHALL BE SCHEDULE 40 GALVANIZED STEEL WITH MALLEABLE IRON SCREWED FITTINGS.

EXTEND INSULATED PRIMARY CONDENSATE DRAIN LINE TO DRAIN, 3" MINIMUM SIZE; INSULATE W/ ARMAFLEX AP-2000 (25/50)

15 FCU MOUNTING DETAIL (4 PIPE)
NOT TO SCALE MEFC102.DWG

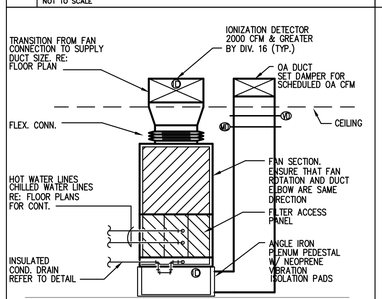

NOTE: ALL CONDENSATE DRAIN PIPING SHALL BE SCHEDULE 40 GALVANIZED STEEL WITH MALLEABLE IRON SCREWED FITTINGS.

16 VERTICAL 4-PIPE FAN COIL UNIT
NOT TO SCALE MEFC202.DWG

1/M-4 MECHANICAL DETAILS
NOT TO SCALE

PROJECT:
Starr County Memorial Hospital
MRI Addition and Renovation
128 N. FM Road 3167 Rio Grande City, Texas

DESIGN GROUP INTERNATIONAL
DELFINO GARZA JR., • ARCHITECT • 1701 MIER STREET • LAREDO, TEXAS 78043 • (956) 724-6268

STATE OF TEXAS
EDWARD PUENTES
102338
LICENSED
PROFESSIONAL ENGINEER
09/10/2018

DBR
200 South 10th Street Suite 901
Mc Allen, Texas 78501
956.683.1640 p 956.683.1903 f
TBPE Firm Registration No. 2234

DBR Project Number 178007.000

AS	MG	JB	TL	–

SHEET
M-4

Plotted: Sep 7, 2018, 3:16 PM by user: mgarza - Saved: 9/6/2018 by user: mgarza
N:\17\178007.000\Drawings\0M-178007-DETAILS AND SCHEDULES.dwg

ELECTRIC HUMIDIFIER SCHEDULE

MARK	H-1
SERVES	RTU-1
STEAM OUTPUT (LBS/HR)	3
KW	1
VOLTS/PHASE/HERTZ	120 / 1 / 60
SINGLE PHASE AMPERAGE	8.3
OPERATING WEIGHT (LBS)	70
MANUFACTURER	PURE HUMIDIFIER
MODEL NO.	ER-1
NOTES	1, 2, 3, 4, 5

NOTES:
1. PROVIDE 3/4" INSULATION WITH FOIL FACE.
2. PROVIDE DISPERSION INJECTION TUBES AND FLEXIBLE HOSE.
3. PROVIDE SCR MODULATION CONTROL WITH HUMIDISTAT.
4. PROVIDE AIRFLOW PROVING SWITCH AND DUCT HIGH-LIMIT.
5. PROVIDE DRAIN TEMPERING KIT AND CONDENSATE PUMP.
6. SEE PLANS FOR DUCT SIZE.

ROOFTOP UNIT SCHEDULE (ELECTRIC HEAT)

FAN AND MOTOR DATA	MARK	RTU-1
	SERVES	MAGNET ROOM
	SUPPLY AIR (CFM)	500
	OUTSIDE AIR (CFM)	25
	EXT. SP. (IN W.G.)	0.5
COOLING	TOTAL COOLING (MBH)	19.4
	SENSIBLE COOLING (MBH)	16.0
	ENTERING AIR TEMP. DB/WB (F)	76.5/61.2
	LEAVING AIR TEMP. DB/WB (F)	46.5/46.2
	AMBIENT TEMP. (F)	105
HEATING	TOTAL HEATING (KW) / STAGES	7.5/SCR
ELECTRIC	VOLTS/PHASE/HERTZ	208/3/60
	MCA	33
	MOCP	35
GENERAL	MANUFACTURER	AAON
	MODEL	RQ002
	NOMINAL TONS	2
	SEER (AHRI)	20.3
	WEIGHT (LBS)	623
	NOTES	1, 2, 3, 4, 5. 6, 7, 8, 9

NOTES:
1. PROVIDE 2" DOUBLE WALL CONSTRUCTION WITH R-13 FOAM INSULATION.
2. PROVIDE FACTORY MOUNTED CONDENSER COIL HAIL GUARD.
3. PROVIDE MODULATING HOT GAS REHEAT.
4. PROVIDE VARIABLE CAPACITY COMPRESSOR CAPABLE OF MODULATING FROM 10 TO 100% OF CAPACITY.
5. PROVIDE UNITARY CONTROLLER, WALL MOUNTED LCD TOUCHSCREEN INTERFACE, SPACE TEMPERATURE AND HUMIDITY SENSOR.
6. PROVIDE CURB, COORDINATE WITH ROOFING CONTRACTOR.
7. UNIT SHALL BE LISTED AS AN AHRI 210/240 CERTIFIED PRODUCT IN THE AHRI DIRECTORY.
8. PROVIDE UNIT WITH UV LIGHTS.
9. PROVIDE UNIT WITH TWO FILTER SECTIONS. FILTER 1 AT 25% EFFECIENCY MERV 7 FILTER; FILTER 2 90% EFFECIENCY MERV 14.

AIR HANDLING UNIT SCHEDULE (4 - PIPE)

		AHU-1	AHU-2	AHU-3	AHU-4A	AHU-4B	AHU-5	AHU-6	AHU-7	AHU-8	AHU-9	AHU-10	AHU-11
GENERAL	SERVES	CAFETERIA	OUTPATIENT 1	OUTPATIENT 2	ER	RADIOLOGY	OR	PHARMACY	BARA	ER-1	ER-2	CORRIDOR BY CAFETERIA	MRI ADDITION
	SUPPLY AIR (CFM)	1,330	2,600	1,600	2,050	1,000	4,440	1,550	600	1,600	2,000	2,400	3,870
	OUTSIDE AIR (CFM)	200	390	240	300	150	4,440	1,550	60	1,000	800	360	500
	EXT. SP. (IN. W.G.)	0.5	0.4	0.5	0.5	0.5	0.5	0.5	0.5	2.25	1.5	0.5	0.5
	FAN MOTOR HORSEPOWER	1/2	2	1/2	1	1/2	3	1/2	1/4	1 1/2	1 1/2	1	2
	VOLTS/PHASE/HERTZ	208/1	208/1	120/1	208/1	208/1	208/3	120/1	120/1	208/3	208/3	208/1	208/3
	MAX. FAN RPM	770	877	767	924	1117	1702	793	1604	1470	1310	876	2026
	FAN TYPE	DIRECT DRIVE	DIRECT DRIVE	DIRECT DRIVE	DIRECT DRIVE	DIRECT DRIVE	DIRECT DRIVE	DIRECT DRIVE	DIRECT DRIVE	DIRECT DRIVE	DIRECT DRIVE	DIRECT DRIVE	DIRECT DRIVE
	VFD/STARTER BY CONTRACTOR	STARTER	STARTER	STARTER	STARTER	STARTER	STARTER	STARTER	STARTER	STARTER	STARTER	STARTER	STARTER
COOLING COIL	TOTAL COOLING (MBH)	51.6	81.6	50.7	60.3	30.5	422.4	152.8	16.3	120.7	111.6	77.0	104.6
	SENSIBLE COOLING (MBH)	38.1	65.8	40.9	50.2	25.2	240.4	86.3	13.5	72.0	72.8	61.6	84.6
	ENTERING AIR TEMP. DB/WB (F)	77.66/64.62	77.66/64.62	77.64/64.61	77.54/64.53	77.65/64.61	104/81	104/81	76.1/63.44	92.38/74.49	85.4/70.08	77.65/64.61	77.6/64.58
	LEAVING AIR TEMP. DB/WB (F)	51.62/51.32	54.65/54.13	54.41/54.01	55.28/54.72	54.76/54.44	55/54.9	54.09/53.94	54.72/53.97	51.8/51.5	52.44/52.31	54.33/53.86	54.78/54.22
	MAX. COIL FACE VEL. (FPM)	342	416	329	422	257	453	399	375	320	400	384	441
	MAX. AIR PRESS. DROP (IN. W.G.)	0.502	0.446	0.306	0.45	0.201	0.775	0.711	-	0.495	0.709	0.394	0.445
	WATER FLOW (GPM)	10.3	16.3	10.1	12.0	4.1	84.2	30.5	3.4	24.1	22.2	15.4	20.8
	ENTERING WATER TEMP (F) - 10° dT	45	45	45	45	45	45	45	45	45	45	45	45
	MIN. ROWS/MAX. FINS PER IN.	6/12	4/12	4/12	4/12	4/12	8/8	4/12	4/12	6/12	6/12	4/12	4/12
	MAX. WATER PRESS. DROP (FT.)	4.29	4.99	3.41	4.66	1.2	9.72	1.25	5.3	10.6	9.17	4.49	3.29
HEATING COIL	TOTAL HEATING (MBH)	71.6	132.9	91.8	104.1	61.6	238.6	77.3	8.0	91.8	102.8	127.7	154.3
	ENTERING AIR TEMP. DB (F)	40	40	40	40	40	40	40	60	40	40	40	40
	LEAVING AIR TEMP. DB (F)	89.64	87.14	92.9	86.82	96.84	90	86.01	72.63	92.9	87.41	89.06	87.22
	MAX. AIR PRESS. DROP (IN. W.G.)	0.076	0.106	0.071	0.109	0.047	0.127	0.099	-	0.071	0.104	0.093	0.121
	WATER FLOW (GPM)	4.8	8.9	6.1	6.9	4.1	15.9	5.2	0.5	6.1	6.9	8.5	10.3
	ENTERING WATER TEMP (F)	180 - 30°dT	180	180	180	180	180	180	180	180	180	180	180
	MIN. ROWS/MAX. FINS PER IN.	1/12	1/12	1/12	1/12	1/12	1/12	1/12	1/4	1/12	1/12	1/12	1/12
	MAX. WATER PRESS. DROP (FT.)	0.36	0.94	0.61	0.78	0.27	0.87	0.41	0.11	0.61	0.76	0.87	0.65
	HEAT IN PREHEAT/REHEAT POSITION	REHEAT	REHEAT	REHEAT	REHEAT	REHEAT	PREHEAT	PREHEAT	REHEAT	REHEAT	REHEAT	REHEAT	REHEAT
GENERAL	MANUFACTURER	TRANE	TRANE	TRANE	TRANE	TRANE	TRANE	TRANE	TRANE	TRANE	TRANE	TRANE	TRANE
	MODEL	BCV054	BCVD090	BCVD072	BCVD072	BCV054	CSAA010	BCVD054	FC060	BCVD072	BCVD072	BCVD090	UCCA080
	2-WAY/3WAY CONTROL VALVES												
	WEIGHT (LBS)	260	319	263	373	233	772	235	132	400	400	319	652
	NOTES	1, 2, 3, 4, 5, 6, 7	1, 2, 3, 4, 5, 6, 7	1, 2, 3, 4, 5, 6, 7	1, 2, 3, 4, 5, 6, 9	1, 2, 3, 4, 5, 6, 9	1, 2, 3, 4, 5, 6, 9	1, 2, 3, 4, 5, 6, 8	1, 2, 3, 4, 5, 6, 9	1, 2, 3, 4, 5, 6, 9	1, 2, 3, 4, 5, 6, 9	1, 2, 3, 4, 5, 6, 7	1, 2, 3, 5, 7

NOTES:
1. PROVIDE WITH DIRECT DRIVE PLENUM FANS
2. PROVIDE WITH MIXING BOX AND ANGLED MERV 8 FILTERS
3. PROVIDE WITH DOUBLE WALL INSULATION
4. PROVIDE WITH STAINLESS STEEL DRAIN PANS
5. PROVIDE WITH DIRECT DRIVE PLENUM FANS WITH FACTORY MOUNTED VFD
6. PROVIDE AIR HANDLING UNIT WITH UV LIGHT; 120V/1PH POWER.
7. PROVIDE UNIT WITH ONE FILTER AT 30% EFFECIENCY MERV 7.
8. PROVIDE UNIT WITH ONE FILTER AT 80% EFFECIENCY MERV 13. PROVIDE DRAFT GAUGE FOR PRESSURE MONITORING.
9. PROVIDE UNIT WITH TWO FILTER SECTIONS. FILTER 1 AT 25% EFFECIENCY MERV 7 FILTER; FILTER 2 99.97% EFFECIENCY MERV 17. PROVIDE DRAFT GAUGE FOR PRESSURE MONITORING.

FAN SCHEDULE

MARK	EF-1	EF-2	EF-3	EF-4	EF-5	EF-6	
SERVES	MAGNET ROOM	MEN RR	WOMEN	UNISEX RR	JANITOR 110	UNISEX	
CFM	1,200	75	75	75	75	75	
E.S.P. (IN W.G.)	0.375	0.25	0.25	0.25	0.25	0.25	
TYPE	ROOF	CEILING	CEILING	CEILING	CEILING	CEILING	
DIRECT/BELT DRIVE	DIRECT	DIRECT	DIRECT	DIRECT	DIRECT	DIRECT	
FAN RPM	1,300	900	900	900	900	900	
MOTOR HORSEPOWER	1/4	61W	61W	61W	61W	61W	
VOLTS/PHASE/HERTZ	115/1/60	115/1/60	115/1/60	115/1/60	115/1/60	115/1/60	
SONES	9.2	1.6	1.6	1.6	1.6	1.6	
MANUFACTURER	COOK	COOK	COOK	COOK	COOK	COOK	
MODEL NO.	120C13D	GC-124	GC-124	GC-124	GC-124	GC-124	
NOTES	1, 2, 3, 4, 5	1, 2, 3	1, 2, 3	1, 2, 3	1, 2, 3	1, 2, 3	

NOTES:
1. PROVIDE FACTORY MOUNTED DISCONNECT.
2. PROVIDE SPEED CONTROLLER.
3. PROVIDE VIBRATION ISOLATION.
4. PROVIDE ROOF CURB.
5. INTERLOCK WITH PANIC BUTTON IN CONTROL ROOM AND BY EXIT OF THE MAGNET ROOM.

SINGLE INLET COOLING ONLY VAV BOX SCHEDULE

MARK	CFM		INLET SIZE	HOT WATER HEATING		VOLTS	MFR	MODEL NO.
	MAX	MIN.		BTUH	GPM			
VAV-1	775	235	10"Ø	20,925	2.1	24 VAC	TITUS	DESV
VAV-2	740	230	10"Ø	19,980	2.0	24 VAC	TITUS	DESV
VAV-3	300	90	6"Ø	8,100	0.8	24 VAC	TITUS	DESV
VAV-4	905	270	10"Ø	24,435	2.4	24 VAC	TITUS	DESV
VAV-5	400	145	8"Ø	10,800	1.1	24 VAC	TITUS	DESV
VAV-6	420	145	8"Ø	11,340	1.1	24 VAC	TITUS	DESV
VAV-7	420	145	8"Ø	113,410	1.1	24 VAC	TITUS	DESV
VAV-8	420	145	8"Ø	11,340	1.1	24 VAC	TITUS	DESV
		80	6"Ø			24 VAC	TITUS	DESV
		80	6"Ø			24 VAC	TITUS	DESV

NOTES:
1. 24 VOLTS AC SHALL BE PROVIDED BY CONTROLS CONTRACTOR.

PUMP SCHEDULE

MARK	CH-1	SP-1	HW-1	
SERVES	PRIMARY CHILLED WATER	PRIMARY CHILLED WATER	PRIMARY CHILLED WATER	
FLOW (GPM)	460	460/200	200	
HEAD (FT H2O)	140	140/90	90	
RPM	1800	1800	1800	
HORESPOWER	25	25	7.5	
VOLTS/PHASE/HERTZ	208/3/60	208/3/60	208/3/60	
PUMP TYPE	END SUCTION	END SUCTION	END SUCTION	
IMPELLER DIA. (IN.)	13.5	13.5	11.0	
PUMP EFF. (%)	75%	75%	71%	
STARTER/VFD BY CONTRACTOR	VFD	VFD	VFD	
MANUFACTURER	BELL & GOSSETT	BELL & GOSSETT	BELL & GOSSETT	
MODEL NO.	e-1510	e-1510	e1510	
NOTES	1, 2, 3, 4, 5	1, 2, 3, 4, 5	1, 2, 3, 4, 5	

NOTES:
1. PROVIDE OSHA APPROVED COUPLING GUARD.
2. PROVIDE PUMP WITH STAINLESS STEEL SHAFT, SLEEVE AND GROUNDING RINGS.
3. PROVIDE GALVANIZED BASE AND DRAIN PAN WITH THREADED OPENING.
4. PROVIDE STRUCTURAL STEEL BASE WITH OPENINGS FOR FIELD GROUTING.
5. PROVIDE BALDOR SUPER E OR EQUIVALENT TYPE ODP MOTOR.

AIR DEVICE SCHEDULE

MARK	MANUFACTURER/MODEL	TYPE	NC	REMARKS
A	TITUS/TMS-AA	24"X24" SUPPLY	25	ALUMINUM CONSTRUCTION. NECK SIZES AS INDICATED BELOW UNLESS NOTED ON PLAN.
B	TITUS/50F	24"X24" EGGCRATE RETURN	20	ALUMINUM CONSTRUCTION. PROVIDE DAMPER FOR EXHAUST.
C	TITUS/TMS	12"X12" SUPPLY	25	STEEL CONSTRUCTION. NECK SIZES AS INDICATED BELOW UNLESS NOTED ON PLAN.
D	TITUS/50F	12"X12" EGGCRATE RETURN	20	ALUMINUM CONSTRUCTION. PROVIDE DAMPER FOR EXHAUST.
E	TITUS/300FS	SIDEWALL SUPPLY	25	ALUMINUM CONSTRUCTION. SEE MECHANICAL PLAN FOR SIZE.
F	TITUS/350FL	SIDEWALL RETURN	20	ALUMINUM CONSTRUCTION. SEE MECHANICAL PLAN FOR SIZE.

NOTES:
1. PROVIDE STANDARD WHITE FINISH FOR ALL AIR DEVICES UNLESS NOTED OTHERWISE ON PLAN.
2. PAINT ALL SURFACES VISIBLE THROUGH FACE OF RETURN AIR GRILLES FLAT BLACK. THIS SHALL INCLUDE PIPING, CONDUIT, DUCTWORK, AND STRUCTURAL MEMBERS.
3. PROVIDE FRAME FOR MOUNTING AIR DEVICE IN LAY-IN GRID CEILING UNLESS REFLECTED CEILING PLAN INDICATES HARD CEILING. IN AREAS WITH HARD CEILINGS, PROVIDE FRAMES FOR SURFACE MOUNTING.
4. UNLESS OTHERWISE NOTED, BRANCH DUCTS SERVING AIR DEVICES SHALL BE SAME SIZE AS NECK OF AIR DEVICE. FOR ROUND NECK DIFFUSERS:
   - 6" DIA: 0-120 CFM
   - 8" DIA: 125-220 CFM
   - 10" DIA: 225-380 CFM
   - 12" DIA: 385-600 CFM

1 M-5 MECHANICAL SCHEDULES
NOT TO SCALE

PROJECT:
Starr County Memorial Hospital
MRI Addition and Renovation
128 N. FM Road 3167 Rio Grande City, Texas

DESIGN GROUP INTERNATIONAL
DELFINO GARZA JR., • ARCHITECT • 1701 MIER STREET • LAREDO, TEXAS 78043 • (956) 724-6268

STATE OF TEXAS
EDWARD PUENTES
102338
LICENSED PROFESSIONAL ENGINEER
09/10/2018

DBR
200 South 10th Street Suite 901
Mc Allen, Texas 78501
956.683.1640 p 956.683.1903 f
TBPE Firm Registration No. 2234

DBR Project Number 178007.000

AS	MG	JB	TL	–

SHEET M-5

Plotted: Sep 7, 2018, 3:48 PM by user: mgarza - Saved: 9/7/2018 by user: mgarza
N:\17\178007.000\Drawings\0M-178007-DETAILS AND SCHEDULES.dwg

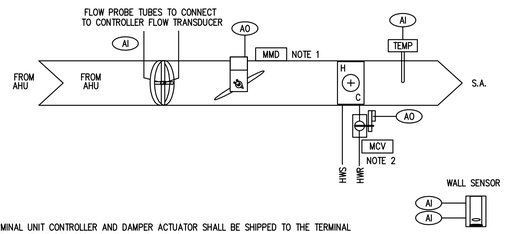

NOTES:
1. TERMINAL UNIT CONTROLLER AND DAMPER ACTUATOR SHALL BE SHIPPED TO THE TERMINAL UNIT MANUFACTURER FOR MOUNTING AND WIRING.
2. PROVIDE 2-WAY PICCV VALVE UNLESS OTHERWISE INDICATED ON SCHEDULE OR IN SEQUENCE OF OPERATION.

System Off - When the system is off:
The primary air damper shall be closed.
The heating coil valve shall be closed.
The control loops shall be disabled.

System Startup - Startup shall be initiated automatically by the EMCS:
In Unoccupied when the corresponding AHU is in UNOCCUPIED MODE.
In Occupied when the corresponding AHU is in PRE-START MODE.
In Unoccupied when the corresponding AHU is in NIGHT-SETBACK MODE.
In Occupied when the corresponding AHU is in OCCUPIED MODE.
In Standby when the corresponding AHU is in OCCUPIED MODE and the zone-mounted Occupancy Sensor times out.

System Operation - When system start-up has been initiated, the following sequences shall be implemented:
The primary air damper shall be modulated between the minimum and maximum values to maintain the space temperature within +/- 0.5 °F of the active Cooling Setpoint. The primary air damper to the terminal unit serving the operating room shall maintain the scheduled CFM to the operating room.
When the space temperature falls below the deadband, the primary air damper shall be modulated to the minimum flow value and the hot water coil control valve shall be modulated to maintain the space temperature within +/- 0.5 °F of the active Heating Setpoint. Heating supply air temperature shall not be allowed to exceed 85°F.

System Setpoints - The setpoints for the system shall be set as follows:
The Occupied Heating Setpoint shall be set initially at 70 °F (adjustable).
The Occupied Cooling Setpoint shall be set initially at 74 °F (adjustable).
The Unoccupied Heating Setpoint shall be set initially at 55 °F (adjustable).
The Unoccupied Cooling Setpoint shall be set initially at 85 °F (adjustable).
The Standby Heating Setpoint shall be set initially at 66 °F (adjustable).
The Standby Cooling Setpoint shall be set initially at 78 °F (adjustable).
The minimum and maximum primary air flowrates shall set at the values given in the Mechanical Drawings.

System Alarms - The EMCS shall generate an alarm as follows:
If the space temperature during the Occupied Mode is 5 °F above the cooling setpoint or 5 °F below the heating setpoint respectively.

1 VAV Terminal Unit - Cooling with Hot Water Reheat - Control Schematic and Sequence of Operations
NOT TO SCALE

NOTES:
1. Provide coil control valve as indicated in mechanical schedules and control specifications.

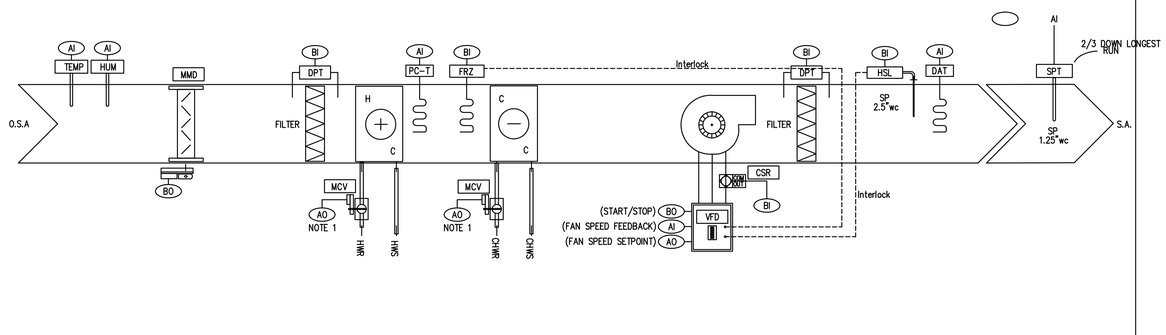

System off - When the system is off:
The outside air damper shall be closed.
The unit supply fan shall be off.
The cooling coil valve shall be closed.
The heating coil valve shall be closed.
All control loops shall be disabled.

System Start-up - System start-up shall be initiated:
By an operator entered manual command at the EMCS.
Automatically by the EMCS based on Pre-Start Mode or Night-Setback Mode.

PRE-START MODE:
The system shall be enabled by an operator entered manual command at the EMCS or automatically by the EMCS based on the Optimal Start/Stop algorithm. Once enabled, the system shall operate per the **System Operation** section, as detailed below.

NIGHT-SETBACK MODE:
The system shall be enabled automatically by the EMCS based on the cooling demand of 5 (adjustable) or more associated terminal units whose space temperature has exceeded the terminal units Unoccupied Cooling Setpoint. Once enabled, the system shall operate per the **System Operation** section, as detailed below.

OCCUPIED MODE:
The system shall be enabled automatically by the EMCS based on the actual space occupancy. When the Time of Day schedule (TOD) is active, the system shall operate per the **System Operation** section, as detailed below.

System Operation - When system start-up has been initiated:
The variable speed supply fan shall start at its minimum speed. Following a confirmation of fan start status, the supply fan speed shall be modulated to maintain the supply air static pressure at setpoint. The speed of the fan shall not be adjusted by more than 20% in any one-minute period. The static pressure setpoint shall be reset via the control algorithm below to optimize the energy usage.
Supply Air Static Pressure Reset - The static pressure setpoint shall be reset up in defined increments at defined intervals until the primary air damper position to all of the associated terminal units have been below the defined value for more than the defined interval. The static pressure setpoint shall be reset down in defined increments at defined intervals until the primary air damper position to at least one (critical zone) of the associated terminal units has been above the defined value for more than the defined interval. The setpoints are detailed in the **System Setpoint** section below.

The chilled water coil control valve shall be modulated to maintain the active supply air temperature setpoint of 54°F.

The hot water pre-heat coil control valve shall be modulated to maintain the pre-heat coil discharge air temperature at setpoint of 50°F.

System Setpoints - The setpoints for the system shall be determined as follows:
The supply air static pressure setpoint shall be set initially at 1.25 inches w.c. (adj) and shall have reset limits of 0.20 to 2.00 inches w.c. (adj)
The time interval for static pressure reset shall be set at 10 minutes (adj).
The static pressure reset increment shall be set at 0.05 inches w.c. (adj)
The terminal unit primary damper position setpoint shall be 90% open. (adj)
The time interval for terminal unit primary damper position shall be set at 15 minutes. (adj)

The supply duct static pressure high-limit setpoint shall be set at 2.0 in. wc. (adj).
The air filter pressure differential high-limit setpoint shall be set at 1.0 in. wc. (adj).
The freeze-stat low-limit trip setpoint shall be set at 37°F(adj).

System Shutdown - System shutdown shall be initiated:
By operator entered manual command at the EMCS.
Automatically by the EMCS based on Night-Setback or Time of Day schedule.
Automatically by the high-static pressure shut down.
Automatically by the unit freeze-stat shut down.
Automatically by a supply fan current sensor status failure.

System Alarms - The EMCS shall generate an alarm if:
If the supply air temperature is outside the limits, which shall be set at +/- 5 °F around setpoint.
If the supply duct static pressure exceeds the high-limit setpoint.
If the unit freeze-stat trips.
If the filter differential pressure exceeds the trip point.
If the current sensor relay indicates a supply fan failure status.
All alarms shall be inhibited when the supply fan is not operating.

X VAV Air Handling Unit - Control Schematic and Sequence of Operations
NOT TO SCALE

1 (M-6.1) SEQUENCE OF OPERATIONS
NOT TO SCALE

PROJECT:
Starr County Memorial Hospital
MRI Addition and Renovation
128 N. FM Road 3167 Rio Grande City, Texas

DESIGN GROUP INTERNATIONAL
DELFINO GARZA JR., • ARCHITECT • 1701 MIER STREET • LAREDO, TEXAS 78043 • (956) 724-6268

STATE OF TEXAS
EDWARD PUENTES
102338
LICENSED PROFESSIONAL ENGINEER
09/10/2018

DBR
200 South 10th Street Suite 901
Mc Allen, Texas 78501
956.683.1640 p 956.683.1903 f
TBPE Firm Registration No. 2234

DBR Project Number 178007.000

AS	MG	JB	TL	–

SHEET
M-6.1

Plotted: Sep 7, 2018, 3:21 PM by user: mgarza - Saved: 9/7/2018 by user: mgarza
N:\17\178007.000\Drawings\0M-178007-DETAILS AND SCHEDULES.dwg

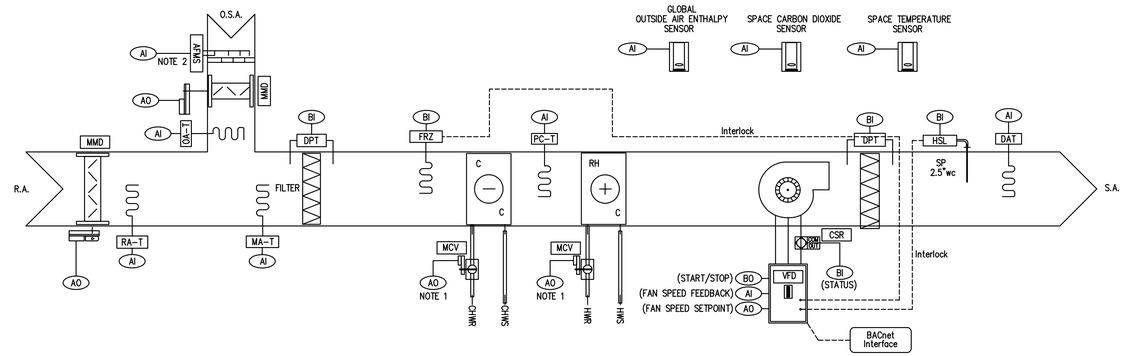

NOTES:
1. Provide coil control valve as indicated in mechanical schedules and control specifications.
2. Provide adequate length before and after air flow measuring station as recommended by manufacturer.

System Off - When the system is off:
The outside air damper shall be closed.
The return air damper shall be open.
The supply air fan shall be off.
The chilled water coil valve shall be closed.
The hot water coil valve(s) shall be closed.
The control loops shall be disabled.

System Start-up - System start-up shall be initiated:
By an operator entered manual command at the EMCS.
Automatically by the EMCS based on Pre-Start Mode or Night-Setback Mode.

Pre-Start Mode:
The system shall be enabled by an operator entered manual command at the EMCS or automatically by the EMCS based on the Optimal Start/Stop algorithm. Once enabled, the system shall operate per the System Operation section as detailed below. Operation of the system during Pre-Start Mode shall not include ventilation air.

Night-Setback Mode:
The system shall be enabled automatically by the EMCS when the space temperature drifts outside the active Unoccupied Cooling or Heating Setpoint. Once enabled, the system shall operate per the System Operation section as detailed below. Operation of the system during Night-Setback Mode shall not include ventilation air. Economizer mode shall be permitted to operate per the System Operation section as detailed below.

System Operation - When system start-up has been initiated:
The variable speed supply air fan shall start. Following a confirmation of fan start status, the supply fan shall initially be indexed to its minimum speed reference value. The speed of the fan shall not be adjusted by more than 20 Hz in any one-minute period.
OUTSIDE AIR CFM AND DAMPER CONTROL: When the system is commanded to start, the EMCS shall index the outside air damper to the scheduled maximum outside airflow rate as measured by the outside airflow measuring station.
OUTSIDE AIR DAMPER / RETURN AIR DAMPER INTEGRATION WITH SUPPLY FAN VFD: The EMCS shall provide dynamic control of the outside air damper and return air damper positions through the full range of the supply fan VFD modulation. The outside air and return air motorized dampers shall modulate in sequence to maintain the active outside air flow rate setpoint. The outside air damper shall first modulate open. If the outside air damper has reached the 100% open position and still cannot achieve the active outside air flow rate setpoint, then the return air damper shall begin to modulate closed. The return air damper position shall have a low limit of 50% (adj) during normal system operation. Damper positions shall not be adjusted by more than 20% (adj) in any one-minute time period.
COOLING MODE: The EMCS shall modulate the chilled water control valve as required to maintain the active coil discharge air temperature setpoint. The EMCS shall modulate the supply fan VFD from its minimum setting to its maximum setting as required to maintain the active space temperature setpoint.
HEATING MODE: When the supply fan is operating at its minimum setting, the hot water re-heat control valve shall modulate to maintain the active space temperature setpoint. If the space temperature drops below its active setpoint and the unit discharge air temperature is at its active setpoint, then the EMCS shall modulate the supply fan VFD from its minimum setting to its maximum setting as required to maintain the active space temperature setpoint and the hot water re-heat control valve shall modulate to maintain the re-heat coil discharge air temperature setpoint.
PREHEAT COIL: The EMCS shall modulate the hot water pre-heat control valve to maintain the pre-heat coil discharge air temperature setpoint.

System Setpoints - The setpoints for the system shall be determined as follows:
The maximum speed reference value shall be the VFD speed required to obtain the design supply airflow value from the unit schedule on the Mechanical Drawings.
The minimum speed reference value shall be VFD speed required to obtain 50% of the design supply airflow value from the unit schedule on the mechanical drawings but not less than the active outside air flow rate setpoint.
The occupied heating space temperature setpoint shall be set at 70°F (adj) with a low-limit alarm of 66°F (adj).
The occupied cooling space temperature setpoint shall be set at 75°F (adj) with a high-limit alarm of 79°F (adj).
The unoccupied heating space temperature setpoint shall be set at 55°F (adj) with a low-limit alarm of 51°F (adj).
The unoccupied cooling space temperature setpoint shall be set at 85°F (adj) with a high-limit alarm of 89°F (adj).
The chilled water coil discharge air temperature setpoint shall be set at 53°F (adj) with a low-limit alarm of 48°F (adj).
The re-heat coil discharge air temperature setpoint shall be set at 85°F (adj) with a high-limit alarm of 100°F (adj).
The maximum outside air flowrate setpoint shall be set at the scheduled maximum flowrate from the unit schedule on the mechanical drawings.
The space carbon dioxide high-limit setpoint shall be set at 1000 ppm (adj).
The supply duct static pressure high-limit setpoint shall be set at 2.0 in. wc. (adj).
The air filter pressure differential high-limit setpoint shall be set at 1.0 in. wc. (adj).
The freeze-stat low-limit trip setpoint shall be set at 37°F(adj).

System Shutdown - System shutdown shall be initiated:
By operator entered manual command at the EMCS.
Automatically by the EMCS based on Night-Setback or Time of Day schedule.
Automatically by the high-static pressure shut down.
Automatically by the unit freeze-stat shut down.
Automatically by a supply fan current sensor status failure.

System Alarms - The EMCS shall generate an alarm condition for each of the following:
If the supply air temperature drops below the chilled water coil discharge air temperature low-limit for 5 minutes (adj).
If the supply air temperature rises above the heating coil discharge air temperature high-limit for 5 minutes (adj).
If the supply duct static pressure exceeds the high-limit setpoint.
If the filter differential pressure exceeds the trip point.
If the unit freeze-stat trips.
If the current sensor relay indicates a supply fan failure status.
All alarms shall be inhibited when the supply fan is not operating except the space temperature alarms. The alarms, except the fan failure and the space temperature alarms, shall remain inhibited following startup of the unit for 2 minutes.

1 **Single Zone AHU - Control Schematic and Sequence of Operations**
NOT TO SCALE

1 / M-6.2 **SEQUENCE OF OPERATIONS**
NOT TO SCALE

PROJECT:
Starr County Memorial Hospital
MRI Addition and Renovation
128 N. FM Road 3167 Rio Grande City, Texas

DESIGN GROUP INTERNATIONAL
DELFINO GARZA JR., • ARCHITECT • 1701 MIER STREET • LAREDO, TEXAS 78043 • (956) 724-6268

STATE OF TEXAS
EDWARD PUENTES
102338
LICENSED PROFESSIONAL ENGINEER
09/10/2018

DBR
200 South 10th Street Suite 901
Mc Allen, Texas 78501
956.683.1640 p 956.683.1903 f
TBPE Firm Registration No. 2234

DBR Project Number 178007.000

AS	MG	JB	TL	–

SHEET
M-6.2

Plotted: Sep 7, 2018, 3:21 PM by user: mgarza - Saved: 9/7/2018 by user: mgarza
N:\17\178007.000\Drawings\0M-178007-DETAILS AND SCHEDULES.dwg

ABBREVIATIONS

A

A	AMPERES
ABV	ABOVE
A/C	AIR CONDITIONING
AC	ALTERNATING CURRENT, AIR COMPRESSOR, ABOVE COUNTER
ACC	AIR COOLED CHILLER
ACCU	AIR COOLED CONDENSING UNIT
AD	ACCESS DOOR
ADA	AMERICANS WITH DISABILITIES ACT
AF	AMPERE FUSE, AMPERE FRAME
AFC	ABOVE FINISHED CEILING
AFF	ABOVE FINISHED FLOOR
AFG	ABOVE FINISHED GRADE
AHU	AIR HANDLING UNIT
AIC	AMPERE INTERRUPT CAPACITY
AL	ALUMINUM
AM	AMMETER
AMP	AMPLIFIER
ANN	ANNUNICATOR
AP	ACCESS PANEL, ALARM PANEL
ARCH	ARCHITECT, ARCHITECTURAL
ASC	AMPERES SHORT CIRCUIT
AT	AMPERE TRIP RATING
ATS	AUTOMATIC TRANSFER SWITCH
AVG.	AVERAGE
AUX.	AUXILIARY
AWG.	AMERICAN WIRE GAUGE

B

BAS	BUILDING AUTOMATION SYSTEM
BC	BELOW COUNTER
BKR	BREAKER
BLDG.	BUILDING

C

C	CONDUIT, CELSIUS
CATV	CABLE TELEVISION SYSTEM
CCTV	CLOSED CIRCUIT TELEVISION
CWP	CONDENSER WATER PUMP
CH	CHILLER
CHP	CHILLED WATER PUMP
CIRC	CIRCULATING
CKT	CIRCUIT
CL	CENTERLINE
CLG.	CEILING
CMU	CONCRETE MASONRY UNIT
COL.	COLUMN
CONC	CONCRETE
CONN	CONNECTION
CONT.	CONTINUOUS,CONTINUATION
CONTR.	CONTROLLER, CONTRACTOR
CP.	CIRCULATING PUMP
CPUC	CPU CHILLER
CR	CARD READER, CORD REEL
CRU	CONDENSATE RETURN UNIT
CT	CURRENT TRANSFORMER, COOLING TOWER
CTR	CENTER
CU	COPPER

D

dB	DECIBEL
DC	DIRECT CURRENT
DDC	DIRECT DIGITAL CONTROL
DTL	DETAIL
DIA	DIAMETER
DIM	DIMENSION
DISC	DISCONNECT
DN	DOWN
DP	DISTRIBUTION PANEL
DPDT	DOUBLE-POLE, DOUBLE-THROW
DPST	DOUBLE-POLE, SINGLE-THROW
DR	DROPPED RECEPTACLE
DS	DAYLIGHT SENSOR
DW	DISHWASHER
DWG	DRAWING
DWH	DOMESTIC WATER HEATER
DWP	DOMESTIC WATER PUMP
DZ	DAYLIGHT ZONE

E

(E)	EXISTING
EA	EACH
EC	ELECTRICAL CONTRACTOR
E.C.	EMPTY CONDUIT
EDF	ELECTRIC DRINKING FOUNTAIN
EF	EXHAUST FAN
EFF	EFFICIENCY
EHC	ELECTRIC HEATING COIL
EJ	EXPANSION JOINT
EL	ELEVATION
ELEC.	ELECTRICAL
ELEV.	ELEVATOR
EMCS	ENERGY MANAGEMENT AND CONTROLS SYSTEM
EMERG	EMERGENCY
EMS	ENERGY MANAGEMENT SYSTEM
ENCL.	ENCLOSURE
ENGR.	ENGINEER
EPO	EMERGENCY POWER OFF
EQUIP	EQUIPMENT
(ER)	EXISTING TO REMAIN
EUH	ELECTRIC UNIT HEATER
EWH	ELECTRIC WATER HEATER
EXH	EXHAUST

F

F	FAHRENHEIT, FAN, FIRE
FA	FIRE ALARM
FACP	FIRE ALARM CONTROL PANEL
FCU	FAN COIL UNIT
FF	FURNITURE FEED
FIXT	FIXTURE
FLA	FULL LOAD AMPS
FLEX	FLEXIBLE
FLR	FLOOR
FLUOR	FLUORESCENT
FP	FIRE PUMP, FAN POWERED
FPTB	FAN POWERED TERMINAL BOX
FRZR	FREEZER
FS	FUSED SWITCH, FLOW SWITCH
FSD	MOTORIZED FIRE SMOKE DAMPER
FT	FOOT, FEET
FTL	FEED-THRU LUGS
FUT	FUTURE
FVNR	FULL-VOLTAGE, NON-REVERSING

G

GA	GAUGE
GAL	GALLON
GALV	GALVANIZED
GC	GENERAL CONTRACTOR
GEN	GENERATOR
GFCI	GROUND FAULT CIRCUIT INTERRUPTER
GND	GROUND
GTD	GENERATOR TRANSFER DEVICE
GUH	GAS UNIT HEATER

H

HACR	HEATING, AIR CONDITIONING RATED CIRCUIT BREAKER
HD	ELECTRIC HAND DRYER
HID	HIGH INTENSITY DISCHARGE
HOA	HAND-OFF-AUTOMATIC
HORIZ	HORIZONTAL
HP	HORSEPOWER
HPS	HIGH PRESSURE SODIUM
HS	HAND SET
HSC	HAND SCANNER
HTG	HEATING
HTR	HEATER
HVAC	HEATING, VENTILATING, AND AIR CONDITIONING
HVU	HEATING/ VENTILATING UNIT
HWB	HOT WATER BOILER
HWC	HOT WATER CIRCULATOR
HWP	HEATING WATER PUMP
HZ	HERTZ

I

ID	INSIDE DIAMETER
IG	ISOLATED GROUND
IN	INCH
INCAND	INCANDESCENT
INT	INTERNAL, INTERIOR

J

JB	JUNCTION BOX
JP	JOCKEY PUMP

K

KEC	KITCHEN EQUIPMENT CONTRACTOR
KO	KNOCKOUT
kVA	KILOVOLT- AMPS
kW	KILOWATT
kWH	KILOWATT-HOUR

L

LED	LIGHT EMITTING DIODE
LF	LINEAR FEET
LRA	LOCKED ROTOR AMPS
LTG	LIGHTING
LV	LOW VOLTAGE TRANSFORMER
LVL	LEVEL

M

	METER
MAP	MASTER ALARM PANEL
MATV	MASTER ANTENNA TELEVISION SYSTEM
MAX.	MAXIMUM
MC	METAL CLAD CABLE
MCA	MINIMUM CIRCUIT AMPS
MCB	MAIN CIRCUIT BREAKER
MCC	MOTOR CONTROL CENTER
MD	MOTORIZED DAMPER
MDP	MAIN DISTRIBUTION PANEL
MECH.	MECHANICAL
MFR	MANUFACTURER
MH	METAL HALIDE
MIC	MICROPHONE
MIN.	MINIMUM
MLO	MAIN LUGS ONLY
MOCP	MAXIMUM OVER-CURRENT PROTECTION
MSB	MAIN SWITCHBOARD
MTD	MOUNTED
MV	MERCURY VAPOR

N

N3R	NEMA 3R ENCLOSURE
N4X	NEMA 4X ENCLOSURE
N.C.	NORMALLY CLOSED
NEC	NATIONAL ELECTRICAL CODE
NEMA	NATIONAL ELECTRICAL MANUFACTURER'S ASSOCIATION
NF	NON-FUSED
NFPA	NATIONAL FIRE PROTECTION ASSOCIATION
NFS	NON-FUSED SWITCH
NIC	NOT IN CONTRACT
NL	NIGHT LIGHT
N.O.	NORMALLY OPEN
NO.	NUMBER
NTS	NOT TO SCALE

O

OAF	OUTSIDE AIR FAN
OAHU	OUTSIDE AIR HANDLING UNIT
OC	ON CENTER
OD	OUTSIDE DIAMETER
OHE	OVERHEAD ELECTRICAL
OPG	OPENING

P

	POLE, PUMP
PB	PUSHBUTTON
PC	PHOTOCELL
PH	PHASE
PL	PILOT LIGHT
PLBG	PLUMBING
PNEU	PNEUMATIC
PNL	PANEL
POS	POINT OF SALE
PP	POWER POLE
PR	PAIR
PRI	PRIMARY
PS	PHOTOSENSOR
PVC	POLYVINYL CHLORIDE
PWR	POWER

Q

QTY	QUANTITY

R

R	EXISTING TO BE REMOVED
RA	RETURN AIR
RAD	REFRIGERATED AIR DRYER
RAF	RETURN AIR FAN
RC	RECONNECT EXISTING DEVICE TO CIRCUIT INDICATED
RCP	REFLECTED CEILING PLAN
RCPT	RECEPTACLE
RE	REFERENCE, REFER
REC	RECEPTACLE
REFR	REFRIGERATOR
REINF	REINFORCING
REL	EXISTING TO BE RELOCATED
REL/EX	NEW LOCATION OF RELOCATED EQUIPMENT
REQD	REQUIRED
REV	REVISION, REVISE
RGS	RIGID GALVANIZED STEEL
RLA	RUNNING LOAD AMPS
RPM	REVOLUTIONS PER MINUTE
RR	REMOVE AND REPLACE
RTU	ROOFTOP UNIT

S

SA	SUPPLY AIR
SAF	SUPPLY AIR FAN
SCHED	SCHEDULE
SE	SEWAGE EJECTOR
SEC	SECONDARY
SECT	SECTION
SF	SQUARE FEET
SHT	SHEET
SIM	SIMILAR
SKVA	STARTING KILOVOLT-AMPS
SKW	STARTING KILOWATTS
SP	SUMP PUMP
SPEC	SPECIFICATION
SPF	STAIR PRESSURIZATION FAN
SPKR	SPEAKER
SPD	SURGE PROTECTION DEVICE
SPDT	SINGLE-POLE, DOUBLE-THROW
SPST	SINGLE-POLE, SINGLE-THROW
SQ.	SQUARE
SRF	SMOKE REMOVAL FAN
SS	START-STOP PUSH BUTTON
SSSC	SOLID STATE SPEED CONTROL
ST	SHUNT TRIP
STB	STEAM BOILER
STD	STANDARD
STL	STEEL
SURF	SURFACE
SW	SWITCH
SWBD	SWITCHBOARD

T

TC	TEMPERATURE CONTROL
TEL	TELEPHONE
TF	TRANSFER FAN
TL	TWIST-LOCK
TOC	TOP OF CURB
TOS	TOP OF STEEL
TP	CHILD TAMPER PROOF DEVICE
TSTAT	THERMOSTAT
TTB	TELEPHONE TERMINAL BOARD
TTC	TELEPHONE TERMINAL CABINET
TU	TERMINAL UNIT
TV	TELEVISION
TVSS	TRANSIENT VOLTAGE SURGE SUPPRESSOR
TYP	TYPICAL

U

UG	UNDERGROUND
UH	UNIT HEATER
UL	UNDERWRITERS LABORATORIES, INC.
UNO	UNLESS NOTED OTHERWISE
UPS	UNINTERRUPTABLE POWER SYSTEM

V

V	VOLT
VA	VOLT-AMPERE
VAV	VARIABLE AIR VOLUME
VC	VOLUME CONTROL
VERT	VERTICAL
VFD	VARIABLE FREQUENCY DRIVE
VP	VACUUM PUMP
VM	VOLT METER

W

W	WATT, WIRE, WIDTH
WG	WIREGUARD
W/	WITH
W/O	WITHOUT
WP	WEATHERPROOF
WS	WATER SOFTENER
WT	WATERTIGHT, WEIGHT
WWF	WELDED WIRE FABRIC
W/FT²	WATTS PER SQUARE FOOT

X

XFMR	TRANSFORMER

Z

Z	ZONE

DAYLIGHT ZONE/PRIMARY DAYLIGHT ZONE

SECONDARY DAYLIGHT ZONE

ELECTRICAL SYMBOLS

MOTORS AND CONTROLS

- (5) — SINGLE OR THREE PHASE MOTOR NUMBER INDICATES HORSE POWER
- ELECTRIC DUCT HEATER
- DISCONNECT (SAFETY) SWITCH "200/3/150" DENOTES AMPERES/POLE/FUSE, "NF" DENOTES NON-FUSED "N3R" DENOTES NEMA 3R
- ENCLOSED CIRCUIT BREAKER- "200/3/150" DENOTES AMPERES/POLE/TRIP.
- MOTOR STARTER FURNISHED BY DIVISION 23 AND INSTALLED BY DIVISION 26.
- COMBINATION DISCONNECT (SAFETY) SWITCH AND MOTOR STARTER, "30/3/15/#0" DENOTES AMPERES/POLES/FUSE/ STARTER SIZE, "NF" DENOTES NON-FUSED. FURNISHED BY DIVISION 23 AND INSTALLED BY DIVISION 26.
- VFD — VARIABLE FREQUENCY DRIVE PROVIDED BY DIVISION 23 AND INSTALLED BY DIVISION 26.
- EPO — EMERGENCY POWER OFF BUTTON.

RECEPTACLES AND OUTLETS

ALL RECEPTACLES SHALL BE MOUNTED 18" ABOVE FINISHED FLOOR TO CENTER OF DEVICE UNLESS NOTED OTHERWISE.

- SIMPLEX WALL RECEPTACLE, NEMA 5-20R, 20A, 125V.
- DUPLEX WALL RECEPTACLE, NEMA 5-20R, 20A, 125V.
  - "GFCI" DENOTES GROUND FAULT INTERRUPTER,
  - "WP" DENOTES WEATHERPROOF,
  - "IG" DENOTES ISOLATED GROUND,
  - "TP" DENOTES SAFETY TYPE, (TAMPER PROOF)
  - "DR" DENOTES DROPPED RECEPTACLE,
  - "USB" DENOTES RECEPTACL WITH UNIVERSAL SERIAL BUS,
  - "AC" DENOTES ABOVE COUNTER MOUNTING, SEE
  - "UC" DENOTES UNDER COUNTER MOUNTING, SEE
  - "H" DENOTES HORIZONTALLY ORIENTED RECEPTACLE, SEE ARCHITECTURAL PLANS FOR EXACT MOUNTING HEIGHT.
- R — DUPLEX WALL RECEPTACLE ON EMERGENCY CIRCUIT, RED COLOR.
- DUPLEX WALL RECEPTACLE ON A CIRCUIT DEDICATED TO DATA PROCESSING, GRAY COLOR. PROVIDE ISOLATED GROUND TYPE RECEPTACLES WHERE NOTED.
- SPLIT WIRED RECEPTACLE. TOP RECEPTACLE SHALL BE SWITCHED ACCORDING TO PLANS, AND BOTTOM SHALL REMAIN UNSWITCHED.
- SP — CONTROLLED DUPLEX WALL RECEPTACLE, NEMA 5-20R, 20A, 125V. "SP" DENOTES SPLIT WIRED
- FOURPLEX (DOUBLE DUPLEX) WALL RECEPTACLE. NEMA 5-20R, 20A, 125V.
- R — FOURPLEX WALL RECEPTACLE ON EMERGENCY CIRCUIT, RED COLOR.
- CONTROLLED FOURPLEX (DOUBLE DUPLEX) WALL RECEPTACLE. NEMA 5-20R, 20A, 125V.
- SPECIAL RECEPTACLE, NEMA CONFIGURATION AS NOTED.
- D R P — FLUSH ELECTRICAL FLOOR OUTLET, "P" DENOTES POKE-THRU. "D" INDICATES DUPLEX RECEPTACLE, "R" INDICATES RED RECEPTACLE ON EMERGENCY POWER. REFER TO FLOOR BOX SCHEDULE, FIRE RATED POKE-THROUGH SCHEDULE AND KEYED NOTES.
- MULTI-OUTLET SURFACE RACEWAY. SEE ARCHITECTURAL DRAWINGS FOR EXACT MOUNTING HEIGHTS.
- J — JUNCTION BOX
  - "MD" DENOTES MOTOR DAMPER,
  - "CR" DENOTES CORD REEL,
  - "D" DENOTES DROP CORD RECEPTACLE,
- DUPLEX RECEPTACLE WITH HOMERUN
- DUPLEX RECEPTACLE (PEDESTAL MOUNTED)
- TWO-GANG CEILING OUTLET
- TWO-GANG FLOOR OUTLET
- THREE-GANG FLOOR OUTLET
- PP — POWER POLE
- DIRECT CONNECTION TO EQUIPMENT
- P — PULL BOX (OVER 4" SQUARE)
- C (2) — CLOCK RECEPTACLE TO BE MOUNTED 12" BELOW FINISHED CEILING. (2) DENOTES DOUBLE SIDED CLOCK.

LIGHTING

LETTER(S) DENOTE TYPE- SEE LIGHTING FIXTURE SCHEDULE FOR ADDITIONAL INFORMATION.

- 2' X 4' LIGHTING FIXTURE.
- 2' X 2' LIGHTING FIXTURE.
- 1' X 4' LIGHTING FIXTURE.
- 1' X 2' LIGHTING FIXTURE.
- 1' X 1' LIGHTING FIXTURE.
- STRIP LIGHTING FIXTURES.
- STAGGERED STRIP LIGHTING FIXTURE.
- ROUND DOWNLIGHT FIXTURE.
- SQUARE DOWNLIGHT FIXTURE.
- WALL MOUNTED LIGHTING FIXTURE.
- TRACK LIGHTING FIXTURE. MOUNTED AS SHOWN ON LIGHTING FIXTURE SCHEDULE.
- CEILING MOUNTED EXIT SIGN; ARROWS AS INDICATED. SHADED AREA DENOTES FACE.
- WALL MOUNTED EXIT SIGN; ARROWS AS INDICATED. SHADED AREA DENOTES FACE.
- EMERGENCY WALL MOUNTED LIGHTING FIXTURE. BATTERY OPERATED UNLESS NOTED OTHERWISE.
- SECURITY WALL PACK
- SITE LIGHTING FIXTURE.
- POST-TOP FIXTURE/ACORN FIXTURE BRACKET ARM INDICATES WALL MOUNT WITH ARM
- EMERGENCY LIGHT FIXTURE WITH BATTERY PACK. PROVIDE WITH UNSWITCHED HOT FOR LOSS OF VOLTAGE AND CHARGING (SAME CIRCUIT AS NORMAL POWER LIGHTING). FIXTURES SHALL BE WIRED IN A MANNER AS TO ALLOW SWITCHING OF FIXTURES WITHOUT DISCHARGING THE EMERGENCY BATTERY. BATTERY PACK IS TO ONLY OPERATE IN THE EVENT OF A POWER OUTAGE.
- EM CIRCUIT — LIGHT FIXTURE ON EMERGENCY BRANCH CIRCUIT, CIRCUIT NUMBER ADJACENT TO FIXTURE INDICATES EMERGENCY CIRCUIT CONNECTED TO FIXTURE. PROVIDE UNSWITCHED HOT, NEUTRAL AND GROUND FOR ALL EMERGENCY LIGHTING ORIGINATING FROM THE EMERGENCY CIRCUIT SHOWN.
- NL — EMERGENCY "NIGHT LIGHT" LIGHT FIXTURE. LIGHT FIXTURE IS UNSWITCHED AND INTENDED FOR 24 HOUR OPERATION. FEED VIA UNSWITCHED HOT.

RACEWAYS AND WIRING

- CAP AND STAKE
- CONDUIT CONCEALED IN WALL OR CEILING
- CONDUIT UNDERSLAB OR UNDERGROUND
- EM — EMERGENCY CONDUIT
- EXPOSED CONDUIT
- DB — UNDERGROUND CONDUIT, "DB" DENOTES DUCTBANK ENCASED IN CONCRETE
- OHE — OVERHEAD ELECTRIC PRIMARY UTILITY POWER LINE
- CONDUIT TURNED UP
- CONDUIT TURNED DOWN
- HASH MARKS INDICATE NUMBER OF CONDUCTORS. LEFT TO RIGHT: PHASE/NEUTRAL/SWITCH LEG/GROUND/ISOLATED GROUND. NO HASH MARKS INDICATES 2# 12, PLUS GROUND, UNLESS NOTED OTHERWISE.
- 1LA-2,4 — HOMERUN TO PANEL WITH CIRCUIT NUMBER(S) AS INDICATED.
- (ON)1LA-6 — PARTIAL CIRCUIT HOMERUN TO PANEL.
- T — COMMUNICATIONS CONDUIT OR CABLE:
  - "CL" DENOTES MASTER CLOCK,
  - "CR" DENOTES CASH REGISTER
  - "D" DENOTES DATA,
  - "FA" DENOTES FIRE ALARM,
  - "I" DENOTES INTERCOM,
  - "OHE" DENOTES OVERHEAD ELECTRICAL LINE.
  - "PA" DENOTES PAGING,
  - "S" DENOTES SECURITY,
  - "T" DENOTES TELEPHONE,
  - "V" DENOTES VIDEO,
- TELECOMMUNICATIONS CABLE TRAY TO BE CONCEALED ABOVE ACCESSABLE CEILING.

ELECTRICAL EQUIPMENT

- DISTRIBUTION PANEL
- MSB — SWITCHBOARD, MAIN DISTRIBUTION PANEL OR MOTOR CONTROL CENTER
- PANELBOARD (FLUSH/SURFACE MOUNT)
- FLOOR MOUNTED DRY-TYPE TRANSFORMER
- SUSPENDED OR WALL MOUNTED TRANSFORMER
- ATS — AUTOMATIC TRANSFER SWITCH
- FIRE RATED PLYWOOD TERMINAL BOARD, TYPE AS NOTED, 4' X 8' X 3/4" UNLESS NOTED OTHERWISE
- TERMINAL CABINET (FLUSH/SURFACE MOUNT), TYPE AS NOTED, 24" X 48" X 3-1/2" UNLESS NOTED OTHERWISE.
- BAT — BATTERY/INVERTER UNIT
- LV — LOW VOLTAGE TRANSFORMER.

COMMUNICATIONS

ALL OUTLET BOXES SHALL BE MOUNTED 18" ABOVE FINISHED FLOOR TO CENTER OF DEVICE UNLESS NOTED OTHERWISE.

THE FOLLOWING NOTATIONS REFER TO ALL COMMUNICATIONS OUTLETS:
"FAX" DENOTES OUTLET DEDICATED FOR A FAX,
"W" DENOTES WALL PHONE SHALL BE MOUNTED AT 42" A.F.F.
"PAY" DENOTES PAY PHONE SHALL BE MOUNTED 42" A.F.F.

- HS — SCHOOL INTERCOMMUNICATION SYSTEM HANDSET.
- INDICATES THE LOCATION OF A NEW TECHNOLOGY WALL OUTLET, PROVIDE DUAL GANG BACK BOX. REFERENCE TECHNOLOGY SHEET FOR CONTENT.
- M W — MICROPHONE FLOOR OUTLET, "W" INDICATES WALL MOUNTED "F" INDICATES FLOOR MOUNTED "H" INDICATES HANGING MOUNTED
- S VC — CEILING MOUNTED SPEAKER. "VC" INDICATES VOLUME CONTROL ON SPEAKER.
- S L — WALL MOUNTED SPEAKER. "L" INDICATED LOCAL SOUND REINFORCEMENT
- CB — SCHOOL INTERCOMMUNICATION SYSTEM CALL-IN. PUSH BUTTON
- BELL, BUZZER OR CHIME AT 80+ A.F.F.
- VC — VOLUME CONTROL - WALL MOUNTED
- AX W — AUXILIARY INPUT JACK. "W" INDICATES WALL MOUNTED "F" INDICATES FLOOR MOUNTED "H" INDICATES HANGING MOUNTED
- AVO — "HIGH" PORTION OF "HIGH/LOW" OUTLETS, REFER TO OUTLET DETAIL.
- AVI — "LOW" PORTION OF "HIGH/LOW" OUTLETS, REFER TO OUTLET DETAIL.

REFERENCE TECHNOLOGY/SECURITY SHEET FOR ADDITIONAL INFORMATION.

ONE LINE AND RISER DIAGRAMS

- TRANSFORMER, TYPE AND RATINGS AS NOTED
- 800A/3P — SWITCH, RATING AS SHOWN
- 400A — FUSE, RATING AS SHOWN
- CB — CIRCUIT BREAKER, RATING AS SHOWN, 3 POLE UNLESS NOTED OTHERWISE. "CL" DENOTES CURRENT LIMITING
- DRAWOUT CIRCUIT BREAKER, RATINGS AS SHOWN, 3 POLE UNLESS NOTED OTHERWISE
- ST — SHUNT TRIP
- GF — GROUND FAULT RELAY
- K — KIRK-KEY INTERLOCK
- M — DIGITAL METER
- A 0-2000 — AMMETER, RANGE AS SHOWN
- AS — AMMETER SWITCH
- V 0-600 — VOLTMETER, RANGE AS SHOWN
- VS — VOLTMETER SWITCH
- WH 0-15 — WATT-HOUR METER, "D" DENOTES DEMAND REGISTER "15" DENOTES MINUTES OF DEMAND INTERVAL
- 1200/5 — CURRENT TRANSFORMER, RATED AS SHOWN
- 12.47KV/120V — POTENTIAL TRANSFORMER, RATING AS SHOWN
- GROUND CONNECTION
- LIGHTING ARRESTOR
- G — GENERATOR SET
- AUTOMATIC TRANSFER SWITCH
- BUS DUCT PLUG
- TVSS — TRANSIENT VOLTAGE SURGE SUPPRESSOR
- M — ELECTRICAL METER
- SPD — SURGE PROTECTION DEVICE

GENERAL NOTES:

A. NOT ALL SYMBOLS SHOWN ON THIS SYMBOL LIST ARE USED IN THE CONTRACT DOCUMENTS.

MISCELLANEOUS

- F — SHADED SYMBOLS INDICATE EXISTING DEVICES TO REMAIN, UNLESS OTHERWISE NOTED.
- INDICATES WALL-MOUNTED WHEN ATTACHED TO ANY SYMBOL
- 1 — DRAWING NOTE REFERENCE
- 1 — STARTER/DISCONNECT SCHEDULE REFERENCE
- 1 — FEEDER SCHEDULE REFERENCE
- LC — LIGHTING CONTACTOR
- TS — TIME SWITCH
- PC — PHOTOCELL
- PUSH BUTTON/DOOR BELL
- TC — TIMECLOCK
- R — RELAY
- SOS — AREA OF RESCUE ASSISTANCE
- B — BELL

FIRE ALARM

- W — WATER FLOW SWITCH
- SP — SUPERVISORY SWITCH
- S — SMOKE DETECTOR - MULTI CRITERIA DETECTOR
- S D — SMOKE DETECTOR - "D" INDICATES IN DUCT TYPE "AS" INDICATES AIR SAMPLING TYPE "AC" INDICATES ABOVE CEILING "BF" INDICATES BELOW FLOOR
- H — HEAT DETECTOR
- S BT — BEAM DETECTOR TRANSMITTER, HIGH IN CEILING WALL DIRECT LINE OF SIGHT.
- S BR — BEAM DETECTOR RECEIVER, HIGH IN CEILING WALL DIRECT LINE OF SIGHT.
- S — FIRE ALARM SPEAKER STROBE / CEILING MOUNTED
- S — FIRE ALARM SPEAKER STROBE / WALL MOUNTED
- S — FIRE ALARM SPEAKER / CEILING MOUNT.
- S — FIRE ALARM SPEAKER / WALL MOUNTED
- DH — MAGNETIC DOOR HOLDER
- R — AUXILIARY CONTROL RELAY
- FH — FIRE FIGHTER HANDSET
- F — FIRE ALARM PULL STATION +42" AFF
- F — FIREMAN'S TELEPHONE JACK +42" AFF
- AUDIO VISUAL FIRE ALARM HORN STROBE +80" AFF- 15/75cd U.N.O.
- VISUAL FIRE ALARM (STROBE) CEILING MOUNT - 15/75cd U.N.O.
- VISUAL FIRE ALARM (STROBE) WALL MOUNT +80" AFF- 15/75cd U.N.O.
- AUDIO FIRE ALARM HORN +80" AFF

SWITCHES

ALL SWITCHES SHALL BE MOUNTED AT 42" ABOVE FINISHED FLOOR TO CENTER OF DEVICE U.N.O.
ALL SWITCHES SHALL BE RATED FOR 20A, 120/277V U.N.O

- $ — SWITCH, SPST
- $x — SWITCH, WHERE 'X':
  - '2' DENOTES DPST
  - '3' DENOTES THREE-WAY
  - '4' DENOTES FOUR-WAY
  - 'M' MOTOR RATED SWITCH WITH THERMAL OVERLOADS
- OC — CEILING MOUNTED OCCUPANCY SENSOR
- RC — DIMMING MODULE ABOVE CEILING
- $D — DIGITAL ADDRESSABLE SWITCH, WHERE:
  - 'D' = WALL MOUNTED DIMMER SWITCH
  - OS = WALL MOUNTED OCCUPANCY SENSOR WITH MANUAL ON/OFF
  - OSD = WALL MOUNTED OCCUPANCY SENSOR WITH DIMMING
  - RC = DUAL ZONE ROOM CONTROLLER WITH DIMMING

NOTE:
WHERE DIGITAL SWITCHES ARE USED, CONTRACTOR SHALL PROVIDE POWER PACK DIMMING MODULES ABOVE CEILING, ALL LINE VOLTAGE WIRING, ALL CAT 5 CABLE AND ALL LOW VOLTAGE WIRING AS REQUIRED FOR A COMPLETE AND OPERATIONAL SYSTEM. FULLY COORDINATE WITH MANUFACTURER OF FURNISHED LIGHTING CONTROL SYSTEM AND REFER TO MANUFACTURER'S WIRING DIAGRAMS.

DRAWING/DETAIL REFERENCE KEY

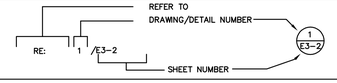

PROJECT:
Starr County Memorial Hospital
MRI Addition and Renovation
128 N. FM Road 3167 Rio Grande City, Texas

DESIGN GROUP INTERNATIONAL
DELFINO GARZA JR., • ARCHITECT • 1701 MIER STREET • LAREDO, TEXAS 78043 • (956) 724-6268

STATE OF TEXAS — EDWARD PUENTES — 102338 — LICENSED PROFESSIONAL ENGINEER

09/10/2018

DBR
200 South 10th Street Suite 901
Mc Allen, Texas 78501
956.683.1640 p 956.683.1903 f
TBPE Firm Registration No. 2234

DBR Project Number 178007.000

AS	MG	JB	TL	-

SHEET
E-0

Plotted: Sep 7, 2018, 10:56 AM by user: jbeltz - Saved: 8/31/2018 by user: jbeltz
N:\17\178007.000\IDrawings\0E-178007-DETAILS AND SCHEDULES.dwg

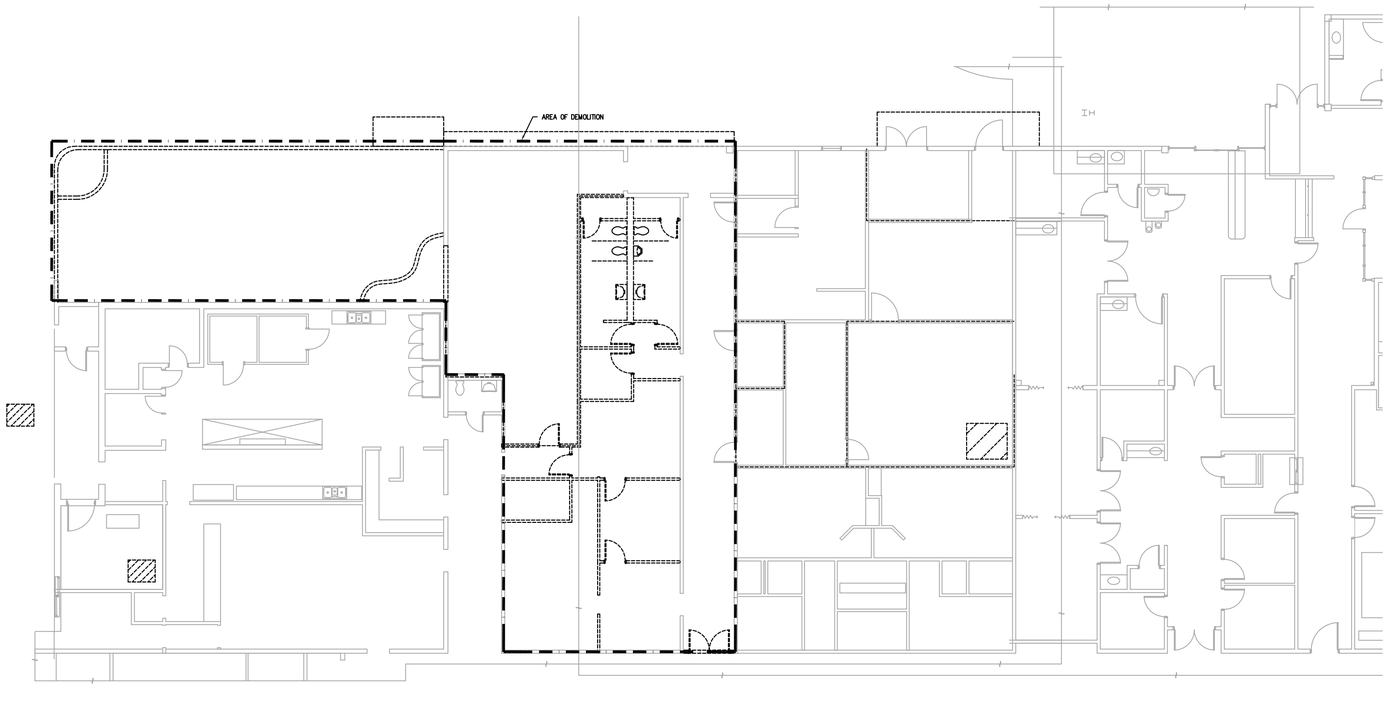

GENERAL ELECTRICAL DEMOLITION NOTES:

A. IT IS THE CONTRACTOR'S RESPONSIBILITY TO HAVE FIELD VERIFIED EXISTING JOB-SITE CONDITIONS DURING THE BIDDING PERIOD TO OBTAIN SCOPE OF ELECTRICAL WORK INVOLVED AS A RESULT OF ARCHITECTURAL MODIFICATIONS TO THE EXISTING STRUCTURE. THE SCOPE OF WORK SHALL INCLUDE ALL LABOR AND MATERIAL CONSISTING OF FIXTURES, DEVICES, EQUIPMENT OR APPARATUS, CONDUIT AND WIRING WHICH MUST BE REROUTED, RELOCATED OR REMOVED EITHER TEMPORARILY OR PERMANENTLY, OR WHICH MUST BE PROVIDED, SO THAT THE INDICATED REMODELING MAY BE ACCOMPLISHED.

B. ALL EQUIPMENT IS EXISTING TO REMAIN UNLESS NOTED OTHERWISE.

C. CONTRACTOR SHALL REMOVE ALL ELECTRICAL CONNECTIONS TO EXISTING PREWIRED FURNITURE. REMOVE CONDUIT AND WIRING BACK TO LAST ACTIVE JUNCTION. ALL DATA CABLING SHALL BE REMOVED BACK TO LAST ACTIVE JUNCTION AND SALVAGED FOR REINSTALLATION.

D. OWNER SHALL RESERVE THE RIGHT TO CLAIM ALL EQUIPMENT AND CABLING REMOVED DURING DEMOLITION.

E. CONTRACTOR SHALL REMOVE ALL ELECTRICAL DEVICES WITHIN DEMOLISHED WALLS INCLUDING RECEPTACLES, SWITCHES, DATA/TELEPHONE DROPS, FIRE ALARM DEVICES, P/A DEVICES, CONDUIT, AND WIRING. REMOVE CONDUIT AND WIRING BACK TO PANEL OR LAST ACTIVE JUNCTION BOX. REFER TO ARCHITECTURAL DEMO PLAN.

F. CONTRACTOR SHALL REMOVE AND SALVAGE ALL EXISTING FIRE ALARM DEVICES. PROVIDE ADDITIONAL DEVICES AS REQUIRED PER NEW FIRE ALARM DESIGN. EXISTING FIRE ALARM CONTROL PANEL SHALL BE SALVAGED AND REINSTALLED. PROVIDE 120V POWER.

G. ANY EXISTING CONDUIT NOT BEING REUSED ROUTED BELOW GRADE SHALL BE ABANDONED.

H. ALL EQUIPMENT SHALL BE LOCATED PER NEW POWER PLANS. EXTEND ALL EXISTING FEEDERS AS REQUIRED FOR RELOCATION.

I. CONTRACTOR SHALL REPORT ANY DAMAGED DEVICES THAT ARE SHOWN AS EXISTING TO REMAIN TO THE OWNER BEFORE STARTING WORK. ALL DEVICES FOUND TO BE DAMAGED AT THE TIME OF SUBSTANTIAL COMPLETION THAT ARE NOT REPORTED PRIOR TO STARTING WORK SHALL BE REPLACED BY THE CONTRACTOR AT HIS COST.

J. DISCONNECT AND REMOVE ALL EXISTING LIGHT FIXTURES IN AREA OF DEMOLITION. DISCONNECT AND REMOVE EXISTING CONDUIT AND WIRE BACK TO SOURCE.

K. CONTRACTOR SHALL PROVIDE ALL LABOR AND MATERIAL AS REQUIRED TO ENSURE CONTINUITY TO LIGHT FIXTURES THAT ARE TO REMAIN.

1 LIGHTING DEMO PLAN
EL-1 — 1/8"=1'-0"

KEY PLAN

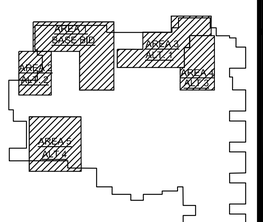

PROJECT:

Starr County Memorial Hospital
MRI Addition and Renovation
128 N. FM Road 3167 Rio Grande City, Texas

DESIGN GROUP INTERNATIONAL
DELFINO GARZA JR., • ARCHITECT • 1701 MIER STREET • LAREDO, TEXAS 78043 • (956) 724-6268

STATE OF TEXAS
EDWARD PUENTES
102338
LICENSED
PROFESSIONAL ENGINEER

09/10/2018

DBR
200 South 10th Street Suite 901
Mc Allen, Texas 78501
956.683.1640 p 956.683.1903 f
TBPE Firm Registration No. 2234

DBR Project Number	178007.000

AS	MG	JB	TL	–

SHEET
EL-1

Plotted: Sep 7, 2018, 11:6 AM by user: jbeltz - Saved: 8/31/2018 by user: jbeltz
N:\17\178007.000\Drawings\0\EL-178007-1.dwg

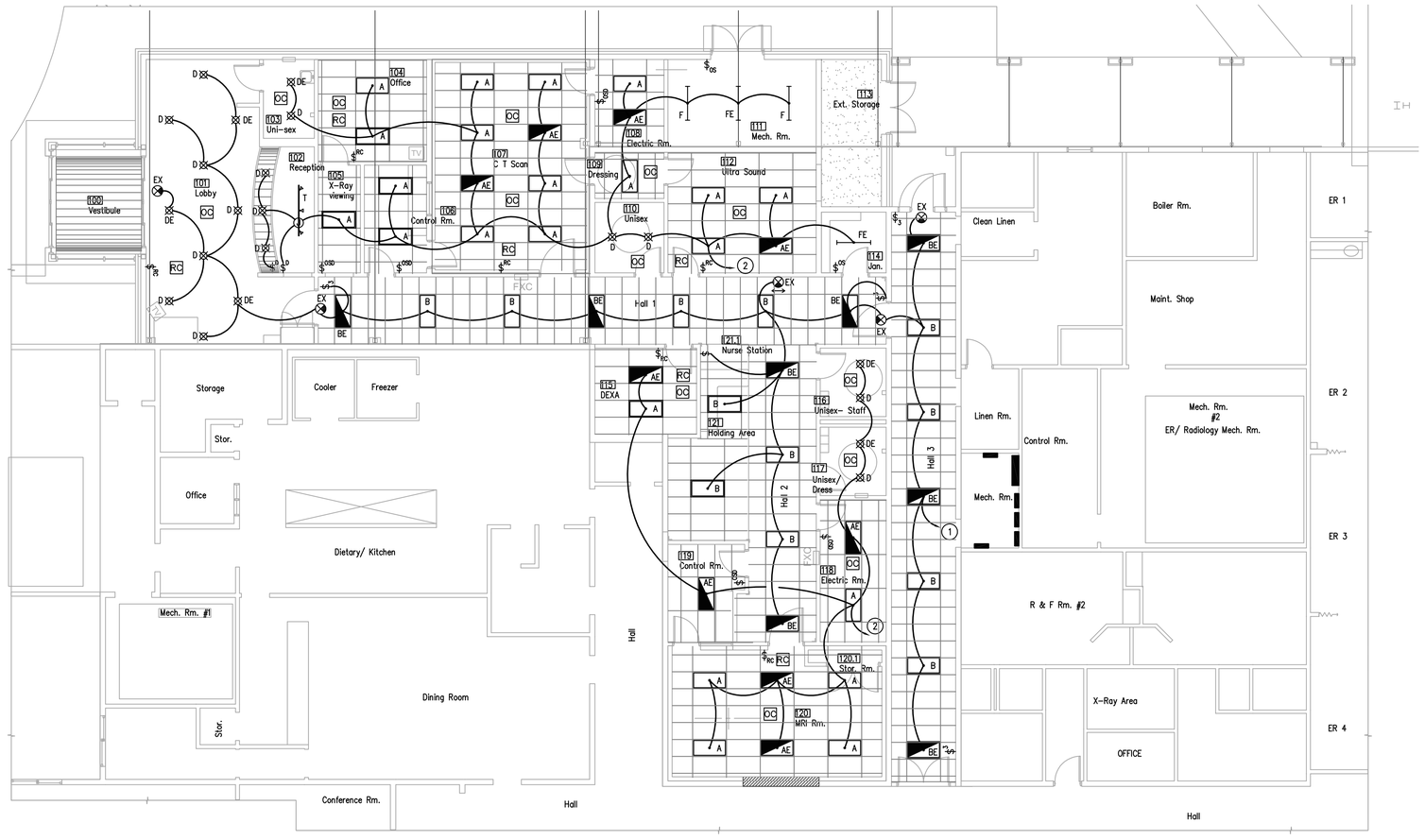

1 EL-2 **LIGHTING PLAN**

1/8"=1'-0"

ELECTRICAL LIGHTING KEYED NOTES:

1. ROUTE HOMERUN TO EXISTING LIFE SAFETY PANEL. PROVIDE NEW 20A/1P BREAKER IN EXISTING PANEL. NOTE CIRCUIT NUMBER ON AS-BUILT DRAWINGS.
2. ROUTE HOMERUN TO EXISTING CRITICAL POWER PANEL. PROVIDE NEW 20A/1P BREAKER IN EXISTING PANEL. NOTE CIRCUIT NUMBER ON AS-BUILT DRAWINGS

ELECTRICAL LIGHTING NOTES:

SEE SHEET E-5 FOR LIGHTING CONTROL DETAILS.

ELECTRICAL GENERAL NOTES:

A. ALL EMERGENCY LIGHT FIXTURE GENERATOR TRANSFER DEVICES SHALL BE CONNECTED TO EMERGENCY EGRESS LIGHTING CIRCUIT INDICATED ON DRAWINGS. ALL EMERGENCY WIRING SHALL BE ROUTED IN A SEPARATE CONDUIT.

B. ALL CEILING MOUNTED DEVICES LOCATED IN LAY-IN CEILINGS SHALL BE CENTERED IN THE CEILING TILE.

C. PROVIDE UNSWITCHED CIRCUIT TO ALL EXIT SIGNS ORIGINATING FROM CIRCUIT NEAREST EMERGENCY CIRCUIT.

D. REFER TO E-4 FOR LIGHT FIXTURE SCHEDULE.

E. CONTRACTOR SHALL INDICATE LIGHTING CIRCUIT CONTROLLED BY EACH SWITCH BY PROVIDING TYPE WRITTEN LABELING LOCATED ON INSIDE FACE OF EACH SWITCH COVER PLATE.

F. SPRINKLER CONTRACTOR SHALL COORDINATE SPRINKLER HEAD LOCATIONS WITH CEILING MOUNTED LIGHTING FIXTURES.

G. FIXTURES DESIGNATED "NL" SHALL BE UNSWITCHED NIGHTLIGHT. FIXTURES SHALL BE CONNECTED TO EMERGENCY CIRCUIT INDICATED.

H. EMERGENCY CIRCUITS SHALL BE ROUTED IN SEPARATE CONDUIT FOR EMERGENCY LIGHTING.

I. PROVIDE ALL EMERGENCY LIGHT FIXTURES WITH UNSWITCHED HOT

J. WHEN LOCATING SYSTEMS NEXT TO DOORS, LOCATE 8 INCHES OFF DOOR JAMB TO CENTER OF DEVICE. WHEN MULTIPLE DEVICES ARE TOGETHER, STACK BUT NO MORE THAN 72 INCHES AFF. COORDINATE SWITCH LOCATIONS IN ROOMS WITH ARCHITECT AND OTHER DEVICES (THERMOSTATS, FIRE ALARM, AND CALL BUTTONS).

K. MINIMUM CIRCUIT SIZE IS 2 #12 AND 1 #12 GROUND IN 3/4" CONDUIT. MAXIMUM FIXTURE WHIP LENGTH FROM ANY J-BOX 6 FEET. LIGHTING CIRCUITS JOINTS SHALL BE MADE UP IN OVERHEAD J-BOXES SECURED TO STRUCTURE WITH LIGHTING WHIPS FROM THE J-BOXES. FIXTURES DESIGNED TO BE QUICK-CLIPPED TOGETHER SHALL BE CONNECTED AS PER MANUFACTURER.

L. COORDINATE LIGHT LOCATIONS WITH OTHER CEILING ITEMS OR JOIST ITEMS PRIOR TO INSTALLATION. LIGHT LOCATIONS TAKE PRECEDENCE OVER AIR DEVICES.

M. PROVIDE SECONDARY SUPPORT WIRES FROM ALL FOUR (4) CORNERS OF THE LAY-IN FIXTURES TO THE STRUCTURE ABOVE. DO NOT SUPPORT FIXTURES FROM CEILING GRID WIRE SUPPORTS, PIPING, CONDUIT, SIDE WALLS, OR MECHANICAL EQUIPMENT. CEILING SPECIFICATIONS DO NOT SUPERCEDE THIS REQUIREMENT.

N. FIXTURES WITH 'E'SUFFIX HAVE BATTERY BACK-UPS. FIXTURES SERVED FROM EMERGENCY PANELS (WITH GENERATOR BACKUP) SHALL BE PROVIDED WITH BODINE GTD DEVICE INSTEAD OF BATTERY BACK-UPS.

O. FIRESTOP ALL CONDUIT PENETRATIONS IN RATED WALLS. SEE ARCHITECTURAL FOR WALL RATINGS. THE CONTRACTOR SHALL BE RESPONSIBLE FOR DAMAGE TO SHEET ROCK AND REPAIR. PROVIDE FIRE RATED SLEEVES IN ALL FLOOR PENETRATIONS.

P. CONTRACTOR TO VERIFY FIXTURE VOLTAGE PRIOR TO INSTALLING ANY RELOCATED FIXTURE. COORDINATE WITH RCP FOR FIXTURE LOCATIONS.

KEY PLAN

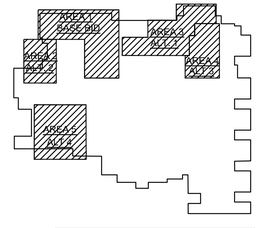

PROJECT:

Starr County Memorial Hospital

MRI Addition and Renovation

128 N. FM Road 3167 Rio Grande City, Texas

DESIGN GROUP INTERNATIONAL

DELFINO GARZA JR., • ARCHITECT • 1701 MIER STREET • LAREDO, TEXAS 78043 • (956) 724-6268

STATE OF TEXAS
EDWARD J. PUENTES
102338
LICENSED PROFESSIONAL ENGINEER

09/10/2018

DBR

200 South 10th Street Suite 901
Mc Allen, Texas 78501
956.683.1640 p 956.683.1903 f
TBPE Firm Registration No. 2234

DBR Project Number 178007.000

AS	MG	JB	TL	–

SHEET

EL-2

Plotted: Sep 7, 2018, 11:5 AM by user: jbeltz - Saved: 8/31/2018 by user: jbeltz
N:\17\178007.000\Drawings\0EL-178007-1.dwg

ELECTRICAL KEYED NOTES

1. EXISTING MECHANICAL UNIT TO BE REPLACED. ELECTRICAL CONTRACTOR SHALL PROVIDE ALL LABOR AND MATERIAL AS REQUIRED TO DISCONNECT ELECTRICAL CIRCUIT FROM EXISTING UNIT AND RECONNECT TO NEW UNIT. FIELD COORDINATE EXACT REQUIREMENTS WITH MECHANICAL.
2. 120V CONNECTION TO UNIT U.V. LIGHTS. COORDINATE EXACT LOCATION AND REQUIREMENTS WITH MECHANICAL. PROVIDE 120V, 20A DISCONNECT SWITCH.

ELECTRICAL GENERAL NOTES

1. PROVIDE NEW DISCONNECT SWITCH, SIZE AS SHOWN, FOR EACH NEW PIECE OF EQUIPMENT. DISCONNECT SWITCHES SHALL BE FUSED. SIZE FUSES PER NAMEPLATE DATA OF FURNISHED EQUIPMENT.

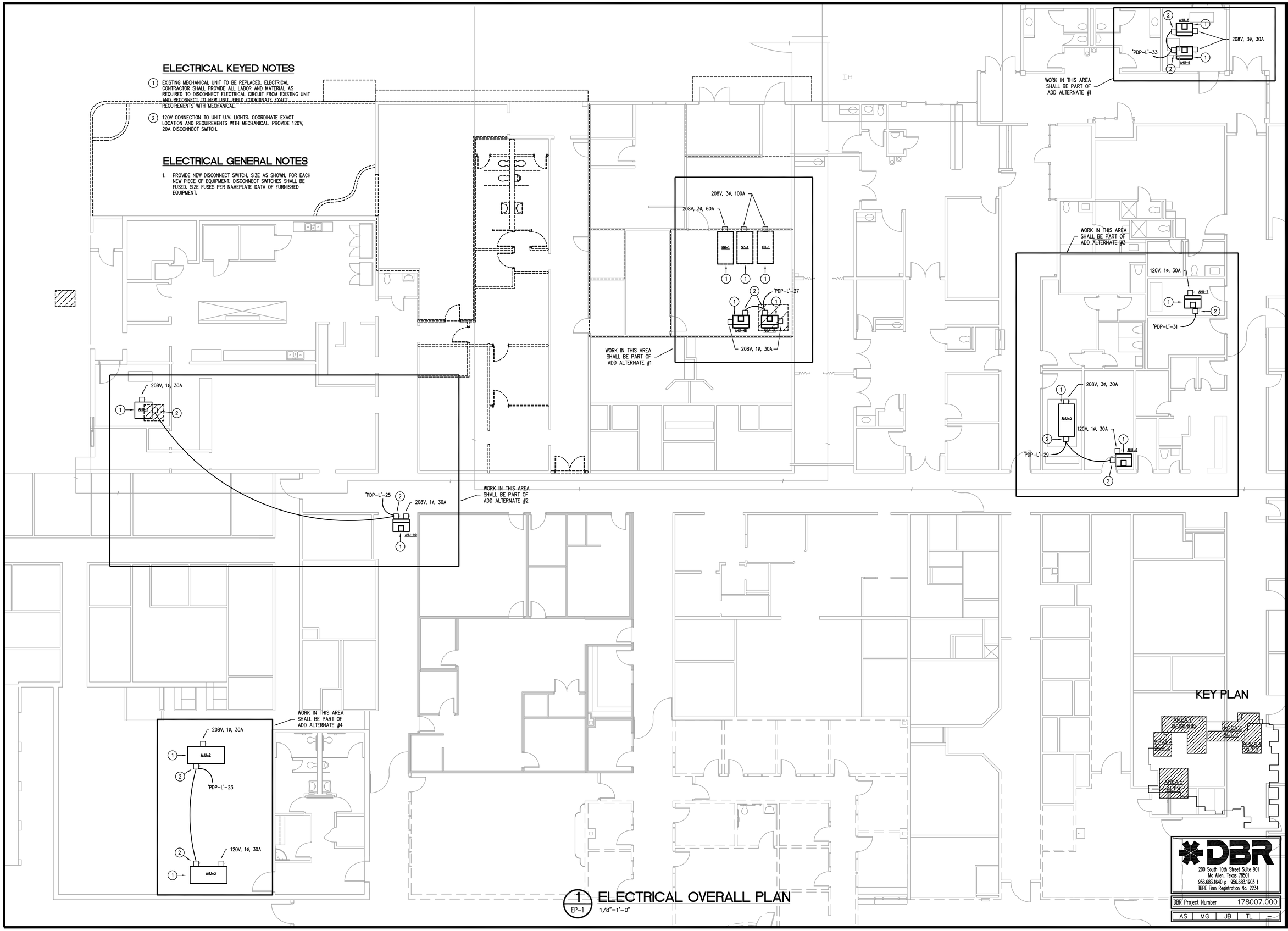

1 EP-1 ELECTRICAL OVERALL PLAN
1/8"=1'-0"

PROJECT:
Starr County Memorial Hospital
MRI Addition and Renovation
128 N. FM Road 3167 Rio Grande City, Texas

DESIGN GROUP INTERNATIONAL
DELFINO GARZA JR., • ARCHITECT • 1701 MIER STREET • LAREDO, TEXAS 78043 • (956) 724-6268

STATE OF TEXAS
EDWARD PUENTES
102338
LICENSED
PROFESSIONAL ENGINEER
09/10/2018

DBR
200 South 10th Street Suite 901
Mc Allen, Texas 78501
956.683.1640 p 956.683.1903 f
TBPE Firm Registration No. 2234

DBR Project Number 178007.000

AS	MG	JB	TL	–

SHEET
EP-1

Plotted: Sep 7, 2018, 11:39 AM by user: jbeltz - Saved: 9/7/2018 by user: jbeltz
N:\17\178007.000\Drawings\0EP-178007-1.dwg

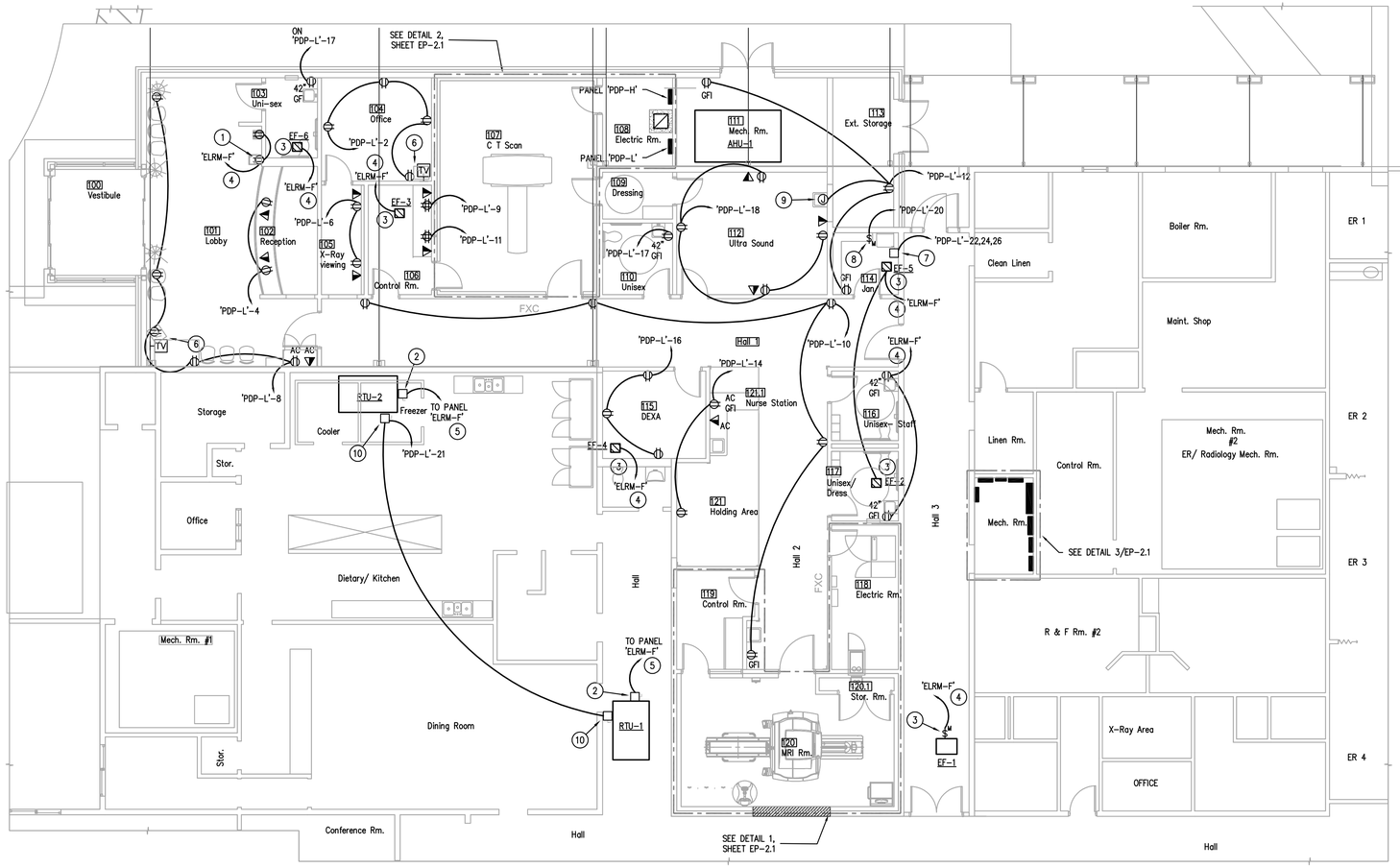

1 EP-2 ELECTRICAL POWER PLAN - RENOVATION AREA 1

1/8"=1'-0"

ELECTRICAL KEYED NOTES:

1. PROVIDE REMOTE GFI RESET BUTTON. SEE DETAIL 7, SHEET E-3.
2. 208V, 60A/3P, NEMA 3R DISCONNECT SWITCH FUSED PER NAMEPLATE DATA OF FURNISHED EQUIPMENT. COORDINATE EXACT LOCATION AND REQUIREMENTS WITH MECHANICAL.
3. PROVIDE POWER TO EXHAUST FAN. DISCONNECT SWITCH SHALL BE PROVIDED WITH EQUIPMENT. COORDINATE EXACT LOCATION AND REQUIREMENTS WITH MECHANICAL.
4. PROVIDE 20A/1P BREAKER IN EXISTING PANEL AND CONNECT CIRCUIT. NOTE CIRCUIT NUMBER ON AS-BUILT DRAWINGS. SEE DETAIL 3, SHEET EP2.1 FOR PANEL LOCATION. CONNECT EF-2,3,4,5,6 TO SAME CIRCUIT.
5. PROVIDE 40A/3P BREAKER IN EXISTING PANEL AND CONNECT CIRCUIT. NOTE CIRCUIT NUMBER ON AS-BUILT DRAWINGS. SEE DETAIL 3, SHEET EP2.1 FOR PANEL LOCATION.
6. T.V. OUTLET AND DUPLEX RECEPTACLE MOUNTED AT 72"A.F.F. COORDINATE EXACT LOCATION WITH ARCH. IN FIELD PRIOR TO ROUGH-IN.
7. 208V, 30A/3P, N.F., NEMA 1 DISCONNECT SWITCH FOR WATER HEATER. COORDINATE EXACT LOCATION AND REQUIREMENTS WITH PLUMBING. MAKE CONNECTION TO EQUIPMENT AS REQUIRED.
8. 120V, MOTOR RATED TOGGLE SWITCH FOR CIRC. PUMP. COORDINATE EXACT LOCATION AND REQUIREMENTS WITH PLUMBING. MAKE CONNECTION TO EQUIPMENT AS REQUIRED. EXTEND CIRCUIT TO TIME SWITCH AND CONNECT.
9. PROVIDE POWER TO STEP-DOWN TRANSFORMER FOR SENSOR FAUCET. COORDINATE EXACT LOCATION AND REQUIREMENTS WITH PLUMBING.
10. 120V CONNECTION TO UNIT U.V. LIGHTS. COORDINATE EXACT LOCATION AND REQUIREMENTS WITH MECHANICAL. PROVIDE 120V, 20A DISCONNECT SWITCH.

KEY PLAN

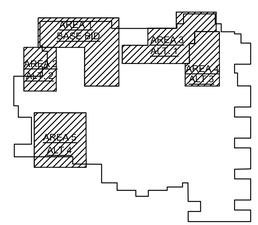

PROJECT:

Starr County Memorial Hospital
MRI Addition and Renovation
128 N. FM Road 3167 Rio Grande City, Texas

DESIGN GROUP INTERNATIONAL
DELFINO GARZA JR., • ARCHITECT • 1701 MIER STREET • LAREDO, TEXAS 78043 • (956) 724-6268

STATE OF TEXAS
EDWARD PUENTES
102338
LICENSED PROFESSIONAL ENGINEER

09/10/2018

DBR
200 South 10th Street Suite 901
Mc Allen, Texas 78501
956.683.1640 p 956.683.1903 f
TBPE Firm Registration No. 2234

DBR Project Number 178007.000

AS	MG	JB	TL	–

SHEET
EP-2

Plotted: Sep 7, 2018, 11:8 AM by user: jbeltz - Saved: 8/31/2018 by user: jbeltz
N:\1\178007.000\Drawings\0EP-178007-1.dwg

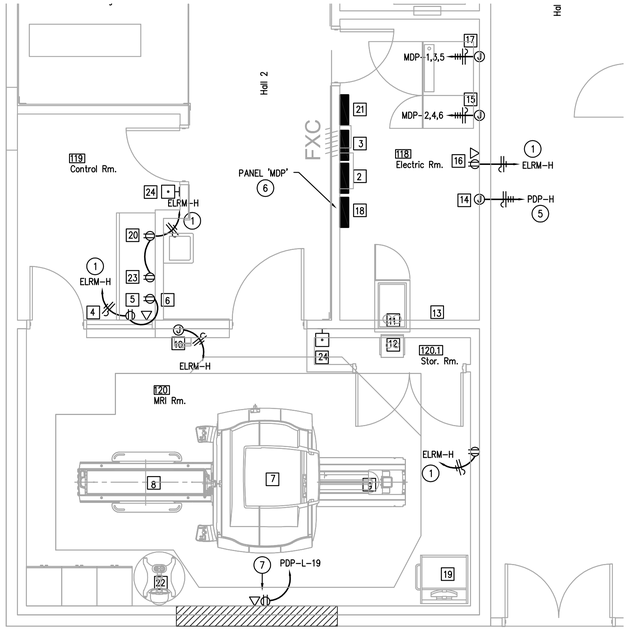

2 ENLARGED ELECTRICAL POWER PLAN - MRI ROOM
EP-2.1 — 1/4"=1'-0"

ELECTRICAL KEYED NOTES:

1. PROVIDE NEW 20A/1P BREAKER IN EXISTING PANEL NOTED AND CONNECT CIRCUIT. NOTE CIRCUIT NUMBER ON AS-BUILT DRAWINGS.
2. EXISTING CT SCAN CONTROL UNIT RELOCATED FROM EXISTING CT SCAN TRAILER. CONTRACTOR SHALL PROVIDE ALL LABOR AND MATERIAL AS REQUIRED TO CONNECT TO CT SCAN MACHINE.
3. TO RELOCATED PANEL 'PDP-H', CONNECT TO EXISTING BREAKER USED FOR PREVIOUS INSTALLATION. PROVIDE CONDUIT AND WIRE TO MATCH PREVIOUS INSTALLATION.
4. RELOCATED ELECTRICAL EQUIPMENT FROM CT SCAN TRAILER. PROVIDE ALL NEW CONDUIT AND WIRE AS SHOWN ON ONE-LINE DIAGRAM. SEE DETAIL 9, SHEET E-3.
5. PROVIDE NEW 30A/3P BREAKER IN RELOCATED PANEL 'PDP-H' AND CONNECT CIRCUIT.
6. SEE DETAIL 8M, SHEET E-3 FOR ONE-LINE DIAGRAM.
7. RECEPTACLE AND DATA OUTLET FOR VIDEO DISPLAY. COORDINATE EXACT LOCATION WITH OWNER PRIOR TO ROUGH-IN.

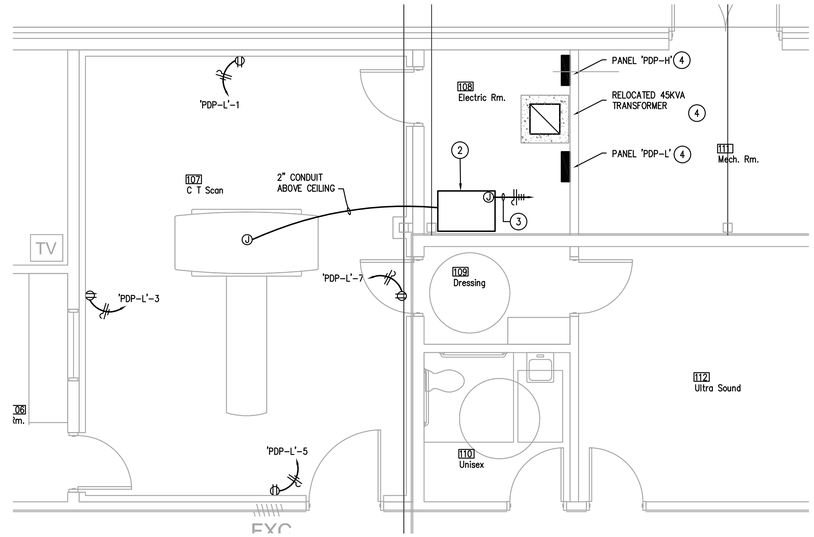

1 ENLARGED ELECTRICAL POWER PLAN - CT SCAN ROOM
EP-2.1 — 1/4"=1'-0"

MRI EQUIPMENT SCHEDULE

ITEM NO. #	ITEM DESCRIPTION
1	DIMPLEX CHILLER (DMPL) (REMOTELY LOCATED)
2	MANUAL WATER BYPASS
3	WATER FILTER
4	REMOTE GRAPHIC DISPLAY (RGD)
5	PNEUMATIC PATIENT ALERT (PA)
6	OPERATOR CONSOLE (GOC)
7	MAGNET (MAG)
8	PATIENT TABLE (PT)
9	REAR PEDESTAL (PED)
10	MAGNET RUNDOWN UNIT (MRU)
11	PENETRATION CABINET (PEN)
12	BLOWER BOX (MG6)
13	SECONDARY PENETRATION WALL (SPW)
14	CRYOCOOLER COMPRESSOR (CRY)
15	HEAT EXCHANGER CABINET (HEC)
16	MAGNET MONITOR (MON)
17	POWER, GRADIENT, RF CABINET (PGR)
18	MAIN DISCONNECT PANEL (MDP) WITH SHUNT TRIP MAIN BREAKER
19	PHANTOM SET STORAGE CABINET (SPT)
20	MUSIC SYSTEM (MU)
21	INJECTOR POWER SUPPLY (IPS)
22	INJECTOR HEAD ON PEDESTAL (IH)
23	INJECTOR CONTROL ROOM UNIT (ICU)
24	EMERGENCY OFF BUTTON (COORDINATE EXACT LOCATION WITH OWNER) EMERGENCY OFF BUTTON SHALL SHUNT TRIP 'MDP' MAIN BREAKER

MAGNET ROOM REQUIREMENTS

REFER TO MRI ROOM EQUIPMENT VENDOR INSTALLATION MANUALS AND INSTRUCTIONS FOR ADDITIONAL INFORMATION AND REQUIREMENTS.

ELECTRICAL LINE AND FILTER REQUIREMENTS:

1. RF SHIELDED ROOM VENDOR AND ELECTRICAL CONTRACTOR MUST DESIGN AND INSTALL ALL ELECTRICAL LINES THROUGH THE RF SHIELDING.
2. THE RF SHIELDED ROOM VENDOR MUST SUPPLY ELECTRICAL LINE FILTERS FOR ALL LINES THROUGH THE RF SHIELDING (EXCLUDING ELECTRICAL LINES THROUGH THE GE SUPPLIED PENETRATION PANELS) TO ENSURE COMPLIANCE WITH THE RF SHIELDED ROOM ATTENUATION REQUIREMENTS.
3. ELECTRICAL LINE FILTERS MUST BE LOCATED OUTSIDE THE 200 GAUSS (20mT) LINE.

GROUNDING REQUIREMENTS:

1. THE PENETRATION PANEL PEN WALL AND SECONDARY PEN WALL (SPW) ARE CONNECTED TO THE RF COMMON GROUND STUD WITH THE GE HEALTHCARE SUPPLIED GROUND CABLE.
2. ALL RF POWER FILTERS OVER 30V (INCOMING) MUST BE LOCATED WITHIN 40" OF THE RF COMMON GROUND STUD.
3. ALL POWER LINES INTO THE RF SHIELDED ROOM REQUIRE AN RF FILTER.
4. ALL ELECTRICAL DEVICES (E.G., OUTLETS, LIGHT FIXTURES, ETC.) MUST HAVE A GROUND WIRE FROM DEVICE POWER SOURCE AND BE GROUNDED TO THE RF SHIELD AT THE RF COMMON GROUND STUD.
5. RESISTANCE BETWEEN ANY TWO GROUNDED DEVICES MUST NOT EXCEED 0.1 ohm TO ENSURE EQUAL POTENTIAL GROUND SYSTEM WITHIN THE MAGNET ROOM (E.G., MGD TO PDU).

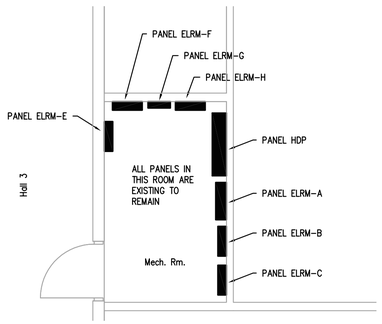

3 ENLARGED ELECTRICAL ROOM
EP-2.1 — 1/4"=1'-0"

KEY PLAN

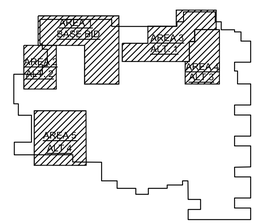

PROJECT:
Starr County Memorial Hospital
MRI Addition and Renovation
128 N. FM Road 3167 Rio Grande City, Texas

DESIGN GROUP INTERNATIONAL
DELFINO GARZA JR., • ARCHITECT • 1701 MIER STREET • LAREDO, TEXAS 78043 • (956) 724-6268

STATE OF TEXAS — EDWARD PUENTES — 102338 — LICENSED PROFESSIONAL ENGINEER

09/10/2018

DBR
200 South 10th Street Suite 901
Mc Allen, Texas 78501
956.683.1640 p 956.683.1903 f
TBPE Firm Registration No. 2234

DBR Project Number 178007.000

AS	MG	JB	TL	–

SHEET
EP-2.1

Plotted: Sep 7, 2018, 10:55 AM by user: jbeltz - Saved: 9/7/2018 by user: jbeltz
N:\17\178007.000\Drawings\0EP-Enlarged-178007-1.dwg

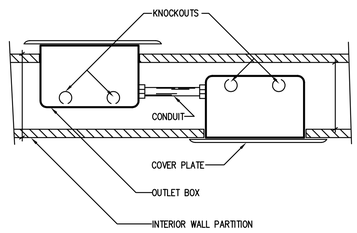

6 BACK-TO-BACK OUTLETS
NOT TO SCALE

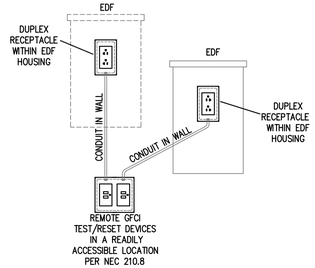

7 ELEC. DRINKING FOUNTAIN DETAIL
NOT TO SCALE

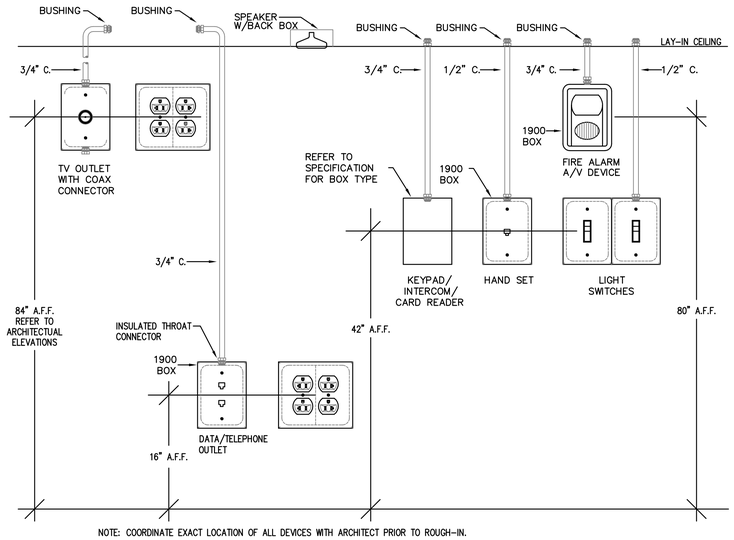

1 TYPICAL DEVICE ELEVATIONS
NOT TO SCALE

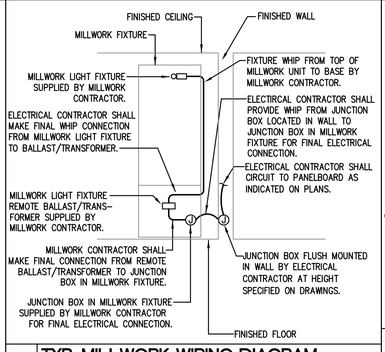

4 TYP. MILLWORK WIRING DIAGRAM
NOT TO SCALE

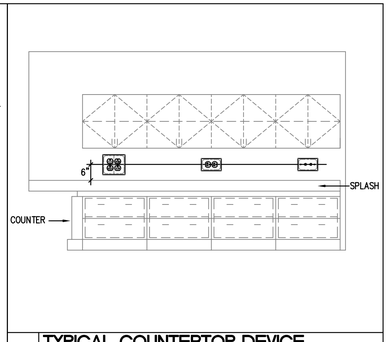

5 TYPICAL COUNTERTOP DEVICE ELEVATION
NOT TO SCALE

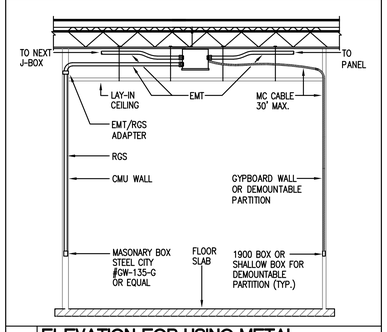

2 ELEVATION FOR USING METAL CLAD (MC) CABLE
NOT TO SCALE

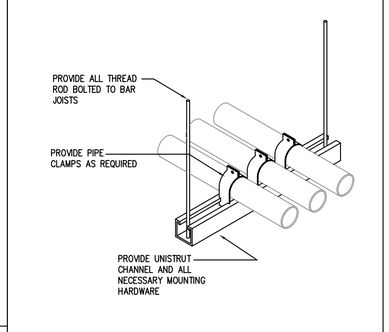

3 UNISTRUT CONDUIT DETAIL
NOT TO SCALE

PROJECT:

Starr County Memorial Hospital

MRI Addition and Renovation

128 N. FM Road 3167 Rio Grande City, Texas

DESIGN GROUP INTERNATIONAL
DELFINO GARZA JR., • ARCHITECT • 1701 MIER STREET • LAREDO, TEXAS 78043 • (956) 724-6268

STATE OF TEXAS
EDWARD PUENTES
102338
LICENSED PROFESSIONAL ENGINEER

09/10/2018

DBR
200 South 10th Street Suite 901
Mc Allen, Texas 78501
956.683.1640 p 956.683.1903 f
TBPE Firm Registration No. 2234

DBR Project Number	178007.000

AS	MG	JB	TL	–

SHEET
E-3

Plotted: Sep 7, 2018, 10:57 AM by user: jbeltz - Saved: 8/31/2018 by user: jbeltz
N:\17\178007.000\Drawings\0E-178007-DETAILS AND SCHEDULES.dwg

LIGHT FIXTURE SCHEDULE

TYPE	MANUFACTURER AND CATALOG NUMBER	LED'S		WATTAGE	NOTES
		COLOR	LUMENS		
A	METALUX #24CZ-LD4-50SE-UNV-L835-CD1-U	3500	5000	56	2'x4' LED VOLUMETRIC LAYIN
AE	METALUX #24CZ-LD4-50SE-UNV-EL14L-L835-CD1-U	3500	5000	56	SAME AS TYPE 'A1' WITH EMERGENCY BATTERY PACK
B	METALUX #24CZ-LD4-40SE-UNV-L835-CD1-U	3500	4000	40	2'x4' LED VOLUMETRIC LAYIN
BE	METALUX #24CZ-LD4-40SE-UNV-EL14L-L835-CD1-U	3500	4000	40	SAME AS TYPE 'A2' WITH EMERGENCY BATTERY PACK
D	PORTFOLIO #LD6B20D010 EU6B 10208035 6LBW2H	3500	1500	21	6" RECESSED DOWNLIGHT
DE	PORTFOLIO #LD6B20D010 IEM14 EU6B 10208035 6LBW2H	3500	1500	21	SAME AS TYPE 'D' WITH EMERGENCY BATTERY PACK
EX	SURE-LITES #EUX7RSD				EDGE LIT EXIT LIGHT
EM	SURE-LITES #AEL2-46-WH				EMERGENCY EGRESS LIGHT
F	METALUX #4SNLED-LD4-41SL-LW-UNV-L835-CD-1-U	3500	4100	41	STRIP LIGHT
FE	METALUX #4SNLED-LD4-41SL-LW-UNV-EL14W-L835-CD-1-U	3500	4100	41	SAME AS TYPE 'F' WITH EMERGENCY BATTERY PACK
T	HALO #L-806-NF-80-40-AH	4000	1289	18	TRACK LIGHT WITH TRACK, TRACK HEADS AND ALL ACCESSORIES AS REQUIRED FOR A COMPLETE, OPERATIONAL SYSTEM

A. Light Fixture Substitutions to Specified Product

1. Prior approval requests will include the following :
   a. Full submittal data, by type, clearly highlighted and arrowed to identify the specific proposed manufacturer's nomenclature
   b. Full submittal data of lamps of proposed manufacturer
   c. Full submittal data of ballast/driver (LED) data of proposed manufacturer
   d. LED lumen data shall include:
      i. Lumen output
      ii. L70 and L90 testing
      iii. Confirmation of independent test lab data ITL
      iv. Color temperature and CRI with quantity of McAdam Ellipse steps
      v. Data shall include sphere and goniometer results for total lumen, total power, luminaire efficacy, CRI and junction temperature for the specified color temperature
      vi. Make and brand of LED diode should be clearly identified on submittal data
      vii. LED dimming shall be equal in range and quality to the specified drivers, Quality of dimming to be defined by dimming range, freedom from perceived flicker or visible stroboscopic flicker, smooth and continuous change in level (no visible steps in transitions), natural square law response to control input, and stable when input voltage conditions fluctuate over what is typically experience in a commercial environment.
      viii. All substitutions must meet specified fixtures certifications (UL,ETL,CE,CSA,RoHS,DLC, Energy Star)
2. Provide lighting calculations with the prior approval request based on reflectance values and light loss factors provided by the engineer and displayed on lighting calculation drawings. (may be unique by area) Calculations shall be shown on one sheet with dimensions as shown on construction set. Data will be submitted electronically in dxf format on a flash drive and with printed calculations on Architectural E size sheets to scale with construction set sheets.
   a. Discrepancies between prior approval data calculations and the original design calculations will result in immediate disqualification of review due to time based constraints on the bid process
3. Prior approval request may require a sample of both the proposed and specified fixtures provided by the alternate manufacturer at NO additional cost to the project. Samples of both specified and proposed must be provided within 10 working days of request.
4. Energy calculations (Comcheck) must be provided with specification sheets including lamp and ballast data supporting input wattages highlighted in yellow and clearly identified by type. Input voltages must coincide with panel schedules. This data will be submitted under separate cover with the prior approval request
5. All data will be submitted electronically and in a bound format
   a. Bound data will be secured in hard binder with 3? rings for ease of review.
   b. Types will be marked with a tab by type and indexed for ease of reference
6. LED warranty information MUST be included by type and marked in RED to clearly identify the manufacturer's warranty terms. Warranty data MUST meet or exceed the specified manufacturers terms
7. Prior approvals MUST be received and acknowleged to the specifiers office no less than 15 days prior to bid.
8. ALL prior approval data must be submitted in one package with complete information. Information that is incomplete will be rejected without review.
9. The prior approval will be returned marked approved or rejected by type with no explanation. If any specification is deemed not equal the review will be stopped and the type rejected with no explanation.
10. Lumen output for the proposed fixture must be highlighted in yellow for clear identification
11. All inverter systems that supply power to LED fixtures must have pure PWM sine wave function and work with any type of lighting load.

Panelboard MDP

0 AIC Rating
Existing
X New

120/208 Volt,3-Phase,4-Wire, 1 Section, 1 -Nema Rating | X MCB, 200 AMP MCB, MLO, 0 AMP BUS (Copper), SHUNT TRIP MAIN BREAKER | X Single, Double, Feed - Thru | Mounting: X Surface, Flush

Notes	Load (VA)	Description	Type	Wire	CB	CKT #	PH	CKT #	CB	Wire	Type	Description	Load (VA)	Notes
	26333	POWER CABINET (PGR)	M	1/0		1	A	2		8	M	HEAT EXCHANGER CABINET (HEC)	6666	
	26333		M		150/3	3	B	4	50/3		M		6666	
	26333		M			5	C	6			M		6666	
						7	A	8						
						9	B	10						
						11	C	12						
						13	A	14						
						15	B	16						
						17	C	18						
						19	A	20						
	78,999	Subtotal										Subtotal	19,998	

N.E.C. (2011)	Load Type	Conn.	Fct.	Diversity	N.E.C. (2011)	Load Type	Conn.	Fct.	Diversity
220.44	(R) Recept.	0		0	220.12	(L) Lighting	0	125%	0
220.56	(K) Kitchen	0	100%	0	220.12	(EL) Ext. Ltg.	0	125%	0
220.60	(C) Cooling	0	0%	0	620.14	(E) Elevators	0	100%	0
220.60	(H) Heating	0	0%	0		(WH) Water Ht.	0	100%	0
220.60	(F) Fans	0	100%	0	220.5	(MT) Lrg. Mot.	0	125%	0
630.11	(W) Welders	0		0		(SP) Sub Panel	0	100%	0
	(M) Misc.	98,997	100%	98,997					

Total Connected Load = 98,997 VA = 275.0 AMPS
Total Load (Diversified)= 98,997 VA = 275.0 AMPS

Location of Panel: MRI ELECTRICAL ROOM

Panelboard PDP-L

0 AIC Rating
X Existing Relocated
New

120/208 Volt,3-Phase,4-Wire, 1 Section, 1 -Nema Rating | X MCB, 150 AMP MCB, MLO, 200 AMP BUS (Copper) | X Single, Double, Feed - Thru | Mounting: X Surface, Flush

Notes	Load (VA)	Description	Type	Wire	CB	CKT #	PH	CKT #	CB	Wire	Type	Description	Load (VA)	Notes
	500	CT SCAN ROOM	R	12	20/1	1	A	2	20/1	12	R	OFFICE 105	360	
	500	CT SCAN ROOM	R	12	20/1	3	B	4	20/1	12	R	RECEPTION AREA	360	
	500	CT SCAN ROOM	R	12	20/1	5	C	6	20/1	12	R	RECEPTION AREA	540	
	500	CT SCAN ROOM	R	12	20/1	7	A	8	20/1	12	R	LOBBY	720	
	360	CT SCAN CONTROL RM.	R	12	20/1	9	B	10	20/1	12	R	CORRIDOR	1080	
	360	CT SCAN CONTROL RM.	R	12	20/1	11	C	12	20/1	12	R	STORAGE/JANITOR	540	
	360	CT SCAN CONTROL RM.	R	12	20/1	13	A	14	20/1	12	R	DEXA 1 ULTRASOUND	500	
	180	CT SCAN CONTROL RM.	R	12	20/1	15	B	16	20/1	12	R	DEXA 2 ULTRASOUND	500	
	360	R.R. RECEPTS	R	12	20/1	17	C	18	20/1	12	R	DEXA ROOMS RECEPTS	360	
	300	MRI VIDEO DISPLAY	R	12	20/1	19	A	20	20/1	12	M	CIRC. PUMP/TIME SW.	200	
	500	RTU U.V. LIGHTS	L	12	20/1	21	B	22		12	WH	EWH-1	1000	
	500	AHU U.V. LIGHTS	L	12	20/1	23	C	24	20/3		WH		1000	
	500	AHU U.V. LIGHTS	L	12	20/1	25	A	26			WH		1000	
	500	AHU U.V. LIGHTS	L	12	20/1	27	B	28	20/1			SPARE		
	500	AHU U.V. LIGHTS	L	12	20/1	29	C	30	20/1			SPARE		
	500	AHU U.V. LIGHTS	L	12	20/1	31	A	32	20/1			SPARE		
	500	AHU U.V. LIGHTS	L	12	20/1	33	B	34	20/1			SPARE		
		SPARE		12	20/1	35	C	36	20/1			SPARE		
		SPARE		12	20/1	37	A	38	20/1			SPARE		
		SPARE		12	20/1	39	B	40	20/1			SPARE		
		SPARE		12	20/1	41	C	42	20/1			SPARE		
	7,420	Subtotal										Subtotal	8,160	

N.E.C. (2011)	Load Type	Conn.	Fct.	Diversity	N.E.C. (2011)	Load Type	Conn.	Fct.	Diversity
220.44	(R) Recept.	8,880		8,880	220.12	(L) Lighting	3,500	125%	4,375
220.56	(K) Kitchen	0	100%	0	220.12	(EL) Ext. Ltg.	0	125%	0
220.60	(C) Cooling	0	0%	0	620.14	(E) Elevators	0	100%	0
220.60	(H) Heating	0	0%	0		(WH) Water Ht.	3,000	100%	3,000
220.60	(F) Fans	0	100%	0	220.5	(MT) Lrg. Mot.	0	125%	0
630.11	(W) Welders	0		0		(SP) Sub Panel	0	100%	0
	(M) Misc.	200	100%	200					

Total Connected Load = 15,580 VA = 43.3 AMPS
Total Load (Diversified)= 16,455 VA = 45.7 AMPS

Location of Panel: CT SCAN ELECTRICAL ROOM

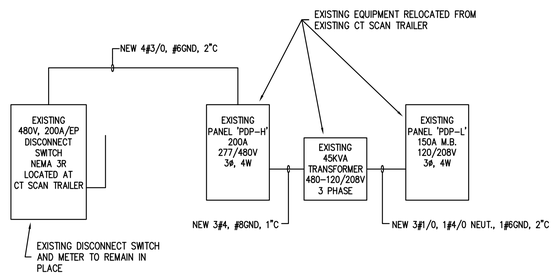

1 ELECTRICAL ONE-LINE DIAGRAM - CT SCAN ROOM EQUIPMENT
NOT TO SCALE

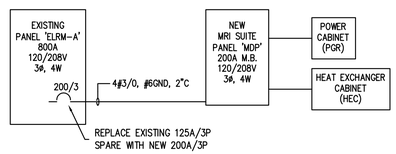

2 ELECTRICAL ONE-LINE DIAGRAM - MRI ROOM EQUIPMENT
NOT TO SCALE

PROJECT:
Starr County Memorial Hospital
MRI Addition and Renovation
128 N. FM Road 3167 Rio Grande City, Texas

DESIGN GROUP INTERNATIONAL
DELFINO GARZA JR., • ARCHITECT • 1701 MIER STREET • LAREDO, TEXAS 78043 • (956) 724-6268

STATE OF TEXAS
EDWARD PUENTES
102338
LICENSED PROFESSIONAL ENGINEER
09/10/2018

DBR
200 South 10th Street Suite 901
Mc Allen, Texas 78501
956.683.1640 p 956.683.1903 f
TBPE Firm Registration No. 2234

DBR Project Number 178007.000

AS	MG	JB	TL	–

SHEET
E-4

Plotted: Sep 7, 2018, 10:58 AM by user: jbeltz - Saved: 8/31/2018 by user: jbeltz
N:\17\178007.000\Drawings\0E-178007-DETAILS AND SCHEDULES.dwg

ONW AND VNW MANUAL MODE OPERATION:

1. PUSHBUTTON PRESS IS REQUIRED TO TURN LOAD ON.

2. LOAD TURNS OFF WHEN SENSOR TIMES OUT OR BY PRESSING PUSH BUTTON.

3. IF DAYLIGHT SENSOR IS ENABLED AND LIGHT LEVEL IS ABOVE SETPOINT, LOAD WILL NOT TURN ON.

ONW - AUTOMATIC MODE OPERATION:

1. WHEN SENSOR ACTIVATES LOAD TURNS ON.

2. PUSHBUTTON CAN BE USED TO TURN LOAD ON OR OFF. IF PUSHBUTTON IS USED TO TURN LOAD OFF, SENSOR MUST TIME OUT FIRST, BEFORE LOAD CAN TURN BACK ON AUTOMATICALLY.

3. IF DAYLIGHT SENSOR IS ENABLED AND LIGHT LEVEL IS ABOVE SETPOINT, LOAD WILL NOT TURN ON.

SENSOR TYPES INCLUDE:

ONW-D-1001-MV
ONW-P-1001-MV
VNW-D-1001-MV
VNW-P-1001-MV

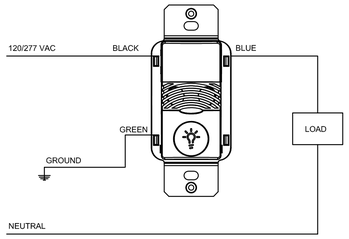

WALL MOUNTED SENSOR SWITCH
(VACANCY MODE)

WIRING DIAGRAM - LINE VOLTAGE WALL SWITCH SENSOR (GROUND REQUIRED) OCCUPANCY/VACANCY - SINGLE RELAY

ONW AND VNW MANUAL MODE OPERATION:

1. PUSHBUTTON PRESS IS REQUIRED TO TURN LOAD ON.

2. LOAD TURNS OFF WHEN SENSOR TIMES OUT OR BY PRESSING PUSH BUTTON.

3. IF DAYLIGHT SENSOR IS ENABLED AND LIGHT LEVEL IS ABOVE SETPOINT, LOAD WILL NOT TURN ON.

ONW - AUTOMATIC MODE OPERATION:

1. WHEN SENSOR ACTIVATES LOAD TURNS ON.

2. PUSHBUTTON CAN BE USED TO TURN LOAD ON OR OFF. IF PUSHBUTTON IS USED TO TURN LOAD OFF, SENSOR MUST TIME OUT FIRST, BEFORE LOAD CAN TURN BACK ON AUTOMATICALLY.

3. IF DAYLIGHT SENSOR IS ENABLED AND LIGHT LEVEL IS ABOVE SETPOINT, LOAD WILL NOT TURN ON.

SENSOR TYPES INCLUDE:

ONW-D-1001-MV
ONW-P-1001-MV
VNW-D-1001-MV
VNW-P-1001-MV

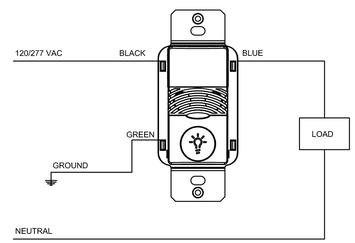

WALL MOUNTED SENSOR SWITCH
(OCCUPANCY MODE)

WIRING DIAGRAM - LINE VOLTAGE WALL SWITCH SENSOR (GROUND REQUIRED) OCCUPANCY/VACANCY - SINGLE RELAY

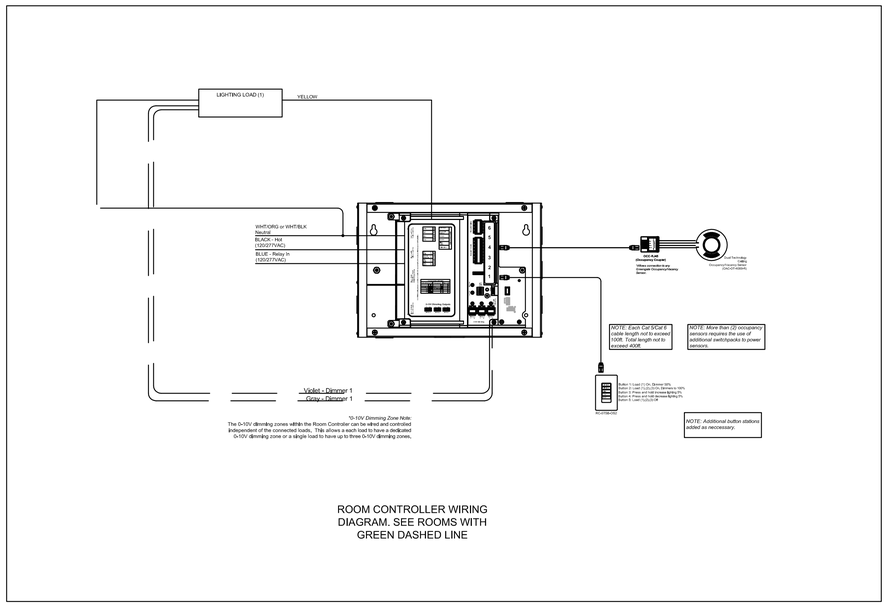

ROOM CONTROLLER WIRING
DIAGRAM. SEE ROOMS WITH
GREEN DASHED LINE

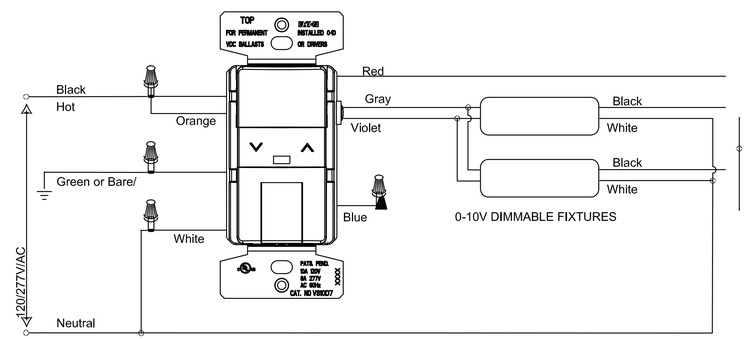

LINE VOLTAGE WALL MOUNTED
SENSOR DIMMER COMBO SWITCH
(VACANCY MODE)

1 E-5 LIGHTING CONTROL DETAILS

N.T.S.

PROJECT:

Starr County Memorial Hospital
MRI Addition and Renovation
128 N. FM Road 3167 Rio Grande City, Texas

DESIGN GROUP INTERNATIONAL
DELFINO GARZA JR., • ARCHITECT • 1701 MIER STREET • LAREDO, TEXAS 78043 • (956) 724-6268

STATE OF TEXAS
EDWARD PUENTES
102338
LICENSED
PROFESSIONAL ENGINEER

09/10/2018

DBR
200 South 10th Street Suite 901
Mc Allen, Texas 78501
956.683.1640 p 956.683.1903 f
TBPE Firm Registration No. 2234

DBR Project Number 178007.000

AS	MG	JB	TL	–

SHEET
E-5

Plotted: Sep 7, 2018, 10:58 AM by user: jbeltz - Saved: 8/31/2018 by user: jbeltz
N:\1\178007.000\Drawings\0E-178007-DETAILS AND SCHEDULES.dwg

PLUMBING SYMBOLS AND ABBREVIATIONS

(NOT ALL ITEMS INDICATED APPLY TO THIS PROJECT)

ABBREVIATIONS

A

A	AIR (COMPRESSED)
ABV	ABOVE
AC	ABOVE CEILING
AD	ACCESS DOOR, AREA DRAIN
ADJ	ADJUSTABLE
AFF	ABOVE FINISHED FLOOR
AFG	ABOVE FINISHED GRADE
AHU	AIR HANDLING UNIT
AL	ALUMINUM
AP	ACCESS PANEL
ARCH	ARCHITECT, ARCHITECTURAL
AS	AIR SEPARATOR
ASME	AMERICAN SOCIETY OF MECHANICAL ENGINEERS
ASTM	AMERICAN SOCIETY OF TESTING AND MATERIALS
AV	ACID VENT
AVG	AVERAGE
AW	ACID WASTE
AWS	AMERICAN WELDING SOCIETY
AUX	AUXILIARY

B

B	BOILER
BC	BELOW COUNTER
B/C	BACK OF CURB
BF	BELOW FLOOR
BFV	BUTTERFLY VALVE
BH	BOX HYDRANT
BLDG	BUILDING
BM	BENCHMARK
BOF	BOTTOM OF FOOTING
BOS	BOTTOM OF STRUCTURE
BT	BATH TUB
BTU	BRITISH THERMAL UNIT
BV	BALL VALVE
BWV	BACK WATER VALVE

C

C	CELSIUS
CAB	CABINET
CB	CATCH BASIN
CD	CONDENSATE DRAIN LINE
CFM	CUBIC FEET PER MINUTE
CFS	CUBIC FEET PER SECOND
CH	CHILLER
CP	CIRCULATING PUMP
CI	CAST IRON
CIRC	CIRCULATING
CL	CENTERLINE
CLG	CEILING
CLR	CLEAR
CMU	CONCRETE MASONRY UNIT
CPI	CAST IRON PIPE INSTITUTE
CPVC	CHLORINATED POLYVINYL CHLORIDE
CO	CLEAN OUT
COL	COLUMN
COMB	COMBINATION
COMP	COMPRESSOR
CONC	CONCRETE, CONCENTRIC
CONN	CONNECTION
CONT	CONTINOUS,CONTINUATION
CONTR	CONTROLLER, CONTRACTOR
CRAC	COMPUTER ROOM A/C UNIT
CTR	CENTER
CU	COPPER
CW	COLD WATER

D

D	DEPTH, DRAIN, DRYER
DESIG	DESIGNATION
DTL	DETAIL
DF	DRINKING FOUNTAIN
DIA	DIAMETER
DIM	DIMENSION
DISC	DISCONNECT
DN	DOWN
DS	DOWNSPOUT, DOUBLE SUCTON
DW	DISHWASHER
DWG	DRAWING
DWH	DOMESTIC WATER HEATER
DWP	DOMESTIC WATER PUMP

E

EA	EACH
EC	ELECTRICAL CONTRACTOR
ECC	ECCENTRIC
EDF	ELECTRIC DRINKING FOUNTAIN
EFF	EFFICIENCY
EJ	EXPANSION JOINT
EL	ELEVATION
ELEC	ELECTRICAL
ELEV	ELEVATOR
EMERG	EMERGENCY
ENCL	ENCLOSURE
ENGR	ENGINEER
EQ	EQUAL
EQUIP	EQUIPTMENT
ET	EXPANSION TANK
ETR	EXISTING TO REMAIN
EXT	EXTERNAL
EXTG	EXISTING

F

F	FARENHEIT, FIRE
FBO	FURNISHED BY OTHERS
FCO	FLOOR CLEAN OUT
FCS	FLOOR CONTROL STATON
FD	FLOOR DRAIN, FIRE DAMPER
FDSC	FIRE DEPARTMENT SIAMESE CONNECTION
FDV	FIRE DEPARTMENT VALVE
FH	FIRE HYDRANT
FHC	FIRE HOSE CABINET
FHR	FIRE HOSE RACK
FIXT	FIXTURE
FLEX	FLEXIBLE
FL	FLOW LINES
FLR	FLOOR
FP	FIRE PUMP
FRZR	FREEZER
FS	FLOW SWITCH, FIRE SPRINKLER
FSK	FLOOR SINK
FT	FOOT, FEET
FUT	FUTURE

G

G	GAS
GA	GAUGE
GAL	GALLON
GALV	GALVANIZED
GC	GENERAL CONTRACTOR
GLV	GLOBE VALVE
GND	GROUND
GPD	GALLONS PER DAY
GPH	GALLONS PER HOUR
GPM	GALLONS PER MINUTE
GV	GATE VALVE

H

HB	HOSE BIBB
HD	HEAD, HUB DRAIN
HORIZ	HORIZONTAL
HP	HORSEPOWER
HKP	HOUSEKEEPING PAD
HSC	HORIZONTAL SPLIT CASE
HT	HEIGHT
HTG	HEATING
HTR	HEATER
HW	HOT WATER
HWR	HOT WATER RETURN
HWS	HOT WATER SUPPLY
HZ	HERTZ

I

ID	INSIDE DIAMETER
IE	INVERT ELEVATION
IN	INCH
INSUL	INSULATION
INT	INTERNAL, INTERIOR
IW	INDIRECT WASTE

J

JP	JOCKEY PUMP

K

KEC	KITCHEN EQUIPTMENT CONTRACTOR
KO	KNOCKOUT
KVA	KILOVOLT- AMPS
KW	KILOWATT

L

L	LENGTH, LAVATORY
LAV	LAVATORY
LF	LINEAR FEET
LP	LOW PRESSURE
LRA	LOCKED ROTOR AMPS
LVL	LEVEL
LWCO	LOW WATER CUT OFF

M

MAX	MAXIMUM
MBTUH	THOUSAND OF BTU'S
MC	MECHANICAL CONTRACTOR
MECH	MECHANICAL
MFR	MANUFACTURER
MH	MANHOLE
MI	MALLEABLE IRON
MIN	MINIMUM
MP	MEDIUM PRESSURE
MS	MOP SINK
MTD	MOUNTED
MU	MAKE-UP

N

N.C.	NORMALLY CLOSED
NFPA	NATIONAL FIRE PROTECTION ASSOCIATION
NIC	NOT IN CONTRACT
N.O.	NORMALLY OPEN
NO.	NUMBER
NTS	NOT TO SCALE

O

OC	ON CENTER
OD	OUTSIDE DIAMETER, OVERFLOW DRAIN
OFCU	OUTSIDE AIR FAN COIL UNIT
OPG	OPENING
OS&Y	OPEN STEM AND YOLK
O	MEDICAL OXYGEN

P

P	PUMP, PLUMBING EQUIPTMENT
PC	PLUMBING CONTRACTOR
PD	PRESSURE DROP, PLANTER DRAIN
PH	PHASE, POST HYDRANT
PIV	POST INDICATOR VALVE
PLBG	PLUMBING
PNEU	PNEUMATIC
PNL	PANEL
PNTH	PENTHOUSE
PP	POLYPROPYLENE
PPM	PART PER MILLION
PRI	PRIMARY
PRS	PRESSURE REDUCING STATION
PRV	PRESSURE REDUCING VALVE
PSF	POUNDS PER SQUARE FOOT
PSI	POUNDS PER SQUARE INCH
PSIG	POUNDS PER SQUARE INCH GAUGE
PT	PLUMBING TRIM
PV	PLUG VALVE
PVC	POLYVINYL CHLORIDE

Q

QTY	QUANTITY

R

RCP	REFLECTED CEILING PLAN, REINFORCED CONCRETE PIPE
RD	ROOF DRAIN
RE	REFERENCE,REFER
RECIRC	RECIRCULATE
RED	REDUCER
REFR	REFRIGERATOR
REINF	REININGFORCING
REQD	REQUIRED
REV	REVISION, REVISE
RM	ROOM
RPM	REVOLUTIONS PER MINUTE
RTU	ROOFTOP UNIT
RV	RELIEF VALVE

S

SCHED	SCHEDULED
SD	STORM DRAIN
SE	SEWAGE EJECTOR
SEC	SECONDARY
SECT	SECTION
SF	SQUARE FEET
SFCS	SPRINKLER FLOOR CONTROL STATION
SH	SHOWER
SHT	SHEET
SIM	SIMILAR
SK	SINK
SP	SUMP PUMP, STATIC PRESSURE
SPEC	SPECIFICATION
SPR	SPRINKLER
SQ	SQUARE
SS	SERVICE SINK
SSD	SUBSURFACE DRAIN
SSFU	SANITARY SEWER FIXTURE UNITS
STD	STANDARD
STL	STEEL
STR	STRAINER
SURF	SURFACE
SUSP	SUSPEND
SV	SANITARY VENT
SW	SOFT WATER

T

TD	TRENCH DRAIN
TDH	TOTAL DYNAMIC HEAD
TH BLK	THRUST BLOCK
TP	TRAP PRIMER
TPD	TRAP PRIMER DEVICE
TYP	TYPICAL

U

U	URINAL
UCD	UNDER CUT DOOR
UG	UNDERGROUND
UH	UNIT HEATER
UL	UNDERWRITERS LABORATORIES, INC.
UNO	UNLESS NOTED OTHERWISE
U/F	UNDERFLOOR
U/S	UNDERSLAB

V

V	VOLT, VENT
VAC	VACUUM(MEDICAL)
VB	VALVE BOX, VACUUM BREAKER
VCP	VITRIFIED CLAY PIPE
VEL	VELOCITY
VERT	VERTICAL
VIB	VALVE IN BOX
VOV	VALVE ON VERTICAL
VP	VACUUM PUMP
VTR	VENT THRU ROOF

W

W	WATT, WASTE, WIDTH, WASHER
W/	WITH
W/O	WITHOUT
WC	WATER CLOSET
WCO	WALL CLEANOUT
WH	WALL HYDRANT
WHA	WATER HAMMER ARRESTOR
WM	WATER METER
WP	WEATHERPROOF
WPD	WATER PRESSURE DROP
WWF	WELDED WIRE FABRIC
WT	WATERTIGHT, WEIGHT

Y

Y	YARD HYDRANT

Z

Z	ZONE

SYMBOLS

PLUMBING SYSTEMS

- SANITARY DRAIN BELOW FLOOR
- SANITARY DRAIN ABOVE FLOOR
- SANITARY VENT
- GW — GREASE WASTE(ABOVE CEILING)
- GW — GREASE WASTE(BELOW FLOOR)
- SD — STORM DRAIN(ABOVE CEILING)
- SD — STORM DRAIN(BELOW FLOOR)
- OD — OVERFLOW DRAIN(ABOVE CEILING)
- OD — OVERFLOW DRAIN(BELOW FLOOR)
- AW — ACID WASTE(ABOVE CEILING)
- AW — ACID WASTE(BELOW FLOOR)
- AV — ACID VENT(ABOVE CEILING OR BELOW FLOOR)
- COLD WATER
- 110° — HOT WATER(FINAL DELIVERY TEMPERATURE AS NOTED)
- 110° — HOT WATER RECIRCULATION (TEMPERATURE AS NOTED)
- G — NATURAL GAS
- T 110° — TEMPERED WATER(FINAL DELIVERY TEMPERATURE AS NOTED)
- CA — COMPRESSED AIR
- A — MEDICAL AIR
- O — MEDICAL OXYGEN
- V — MEDICAL VACUUM
- F — FIRE STANDPIPE, FIRE LINE
- FS — WET AUTOMATIC FIRE SPRINKLER
- TP — TRAP PRIMER
- D — DRAIN LINE
- SW — SOFT WATER

SYMBOLS

PIPING FITTINGS

- CAP ON END OF PIPE
- ELBOW UP
- ELBOW DOWN
- VALVE IN DROP
- VALVE IN RISE
- DIRECTION OF FLOW
- DIRECTION OF SLOPE DOWN
- CONCENTRIC REDUCER
- ECCENTRIC REDUCER
- TEE OUTLET UP
- TEE OUTLET DOWN
- UNION
- FLANGE
- PIPE ANCHOR
- EXPANSION JOINT
- STRAINER WITH BLOWDOWN VALVE
- GATE VALVE, HVAC BALANCING/STOP VALVE
- GLOBE VALVE
- BALL VALVE
- BALANCING VALVE WITH DIFFERENTIAL PRESSURE TAPS
- OS&Y VALVE
- CHECK VALVE
- BUTTERFLY VALVE
- TWO-WAY MODULATING CONTROL VALVE
- THREE-WAY MODULATING CONTROL VALVE
- SOLENOID VALVE
- PRESSURE REDUCING VALVE
- GAS REGULATOR
- GAS COCK
- SPRINKLER FLOOR CONTROL STATION
- MANUAL AIR VENT
- AUTOMATIC AIR VENT
- T&P RELIEF VALVE
- LINE CLEANOUT/ WALL CLEANOUT
- FLOOR CLEANOUT
- YARD CLEANOUT
- PRESSURE GAUGE WITH GAUGE COCK
- THERMOMETER
- WM — WATER METER
- FLEXIBLE CONNECTION
- PRESSURE AND TEMPERATURE TAP
- FLOW VENTURI
- VACUUM BREAKER
- VACUUM RELIEF VALVE
- BACKFLOW PREVENTER
- CIRCULATING PUMP
- DRAIN(TYPE AND SIZE AS NOTED ON PLANS)
- ROOF DRAIN OR OVERFLOW DRAIN
- ROOF DRAIN OR OVERFLOW DRAIN(FROM ABOVE)
- WATER HAMMER ARRESTOR

MISCELLANEOUS

- HOSE BIBB
- WALL HYDRANT
- PLUMBING FIXTURES
- POINT OF NEW CONNECTION TO EXISTING PIPING
- (1) PLUMBING DRAWING NOTE REFERENCE
- 2 / P2.1 DETAIL NUMBER OR PLAN / SHEET WHERE DETAIL OR PLAN IS SHOWN
- FS FLOW SWITCH
- TS TAMPER SWITCH
- FIRE HOSE CABINET
- FIRE DEPARTMENT SIAMESE CONNECTION(WALL MOUNTED)
- FIRE DEPARTMENT SIAMESE CONNECTION(FREE STANDING)
- 2 / P7.1 PLUMBING RISER DIAGRAM NUMBER / SHEET WHERE PLUMBING RISER DIAGRAM IS SHOWN

GENERAL FIRE PROTECTION NOTE

1 THE ENTIRE BUILDING HAS EXISTING FIRE SPRINKLER SYSTEM.

2 CONTRACTOR TO REWORK/ADJUST ALL AFFECTED SPRINKLER HEADS AND FIRELINES INCLUDING SOME SPRINKLER SYSTEM IN THE AREA THAT ARE NOT CODE COMPLIANT AND NEED TO BE REDONE. SITE VISIT IS REQUIRED PRIOR TO BIDDING TO DETERMINE FULL SCOPE OF WORK. PROVIDE LIGHT HAZARDS PROTECTION FOR AREAS OF RENOVATIONS AND ADDITION, EXCEPT FOR MECHANICAL ROOMS, ELECTRICAL ROOMS SHALL RECEIVE ORDINARY HAZARD, GROUP 2 PROTECTION. THE DESIGN AND INSTALLATION SHALL BE IN ACCORDANCE WITH NFPA 13, AND NFPA 24 AND ALL LOCAL CODES. SUBMIT SHOP DRAWINGS AND CALCULATIONS AS SPECIFIED.

3. CONTRACTOR IS RESPONSIBLE FOR TESTING AND INSPECTING EXISTING SYSTEM AND INSURE THAT ALL COMPONENTS ARE FULLY FUNCTIONING. A VISIT TO THE SITE WILL BE REQUIRED PRIOR TO BIDDING TO DETERMINE FULL SCOPE OF WORK.

4 A STATE LICENSED FIRE SPRINKLER AND FIRE ALARM CONTRACTOR MUST SUBMIT SHOP DRAWINGS DIRECTLY TO THE FIRE DEPARTMENT FIRE MARSHAL'S OFFICE FOR REVIEW AND APPROVAL OF THE PROPOSED FIRE SPRINKLER AND FIRE ALARM SYSTEM WORK. THESE SHOP DRAWINGS MUST BE APPROVED BY THE FIRE DEPARTMENT PRIOR TO THE CONTRACTOR BEGINNING THE WORK.

PROJECT:

Starr County Memorial Hospital
MRI Addition and Renovation
128 N. FM Road 3167 Rio Grande City, Texas

DESIGN GROUP INTERNATIONAL
DELFINO GARZA JR., • ARCHITECT • 1701 MIER STREET • LAREDO, TEXAS 78043 • (956) 724-6268

STATE OF TEXAS
EDWARD PUENTES
102338
LICENSED
PROFESSIONAL ENGINEER

09/10/2018

DBR
200 South 10th Street Suite 901
Mc Allen, Texas 78501
956.683.1640 p 956.683.1903 f
TBPE Firm Registration No. 2234

DBR Project Number 178007.000

AS	MG	JB	TL	–

SHEET
P-0

Plotted: Sep 6, 2018, 2:53 PM by user: tleochico - Saved: 9/6/2018 by user: tleochico
N:\17\178007.000\Drawings\0P-178007-DETAILS.dwg

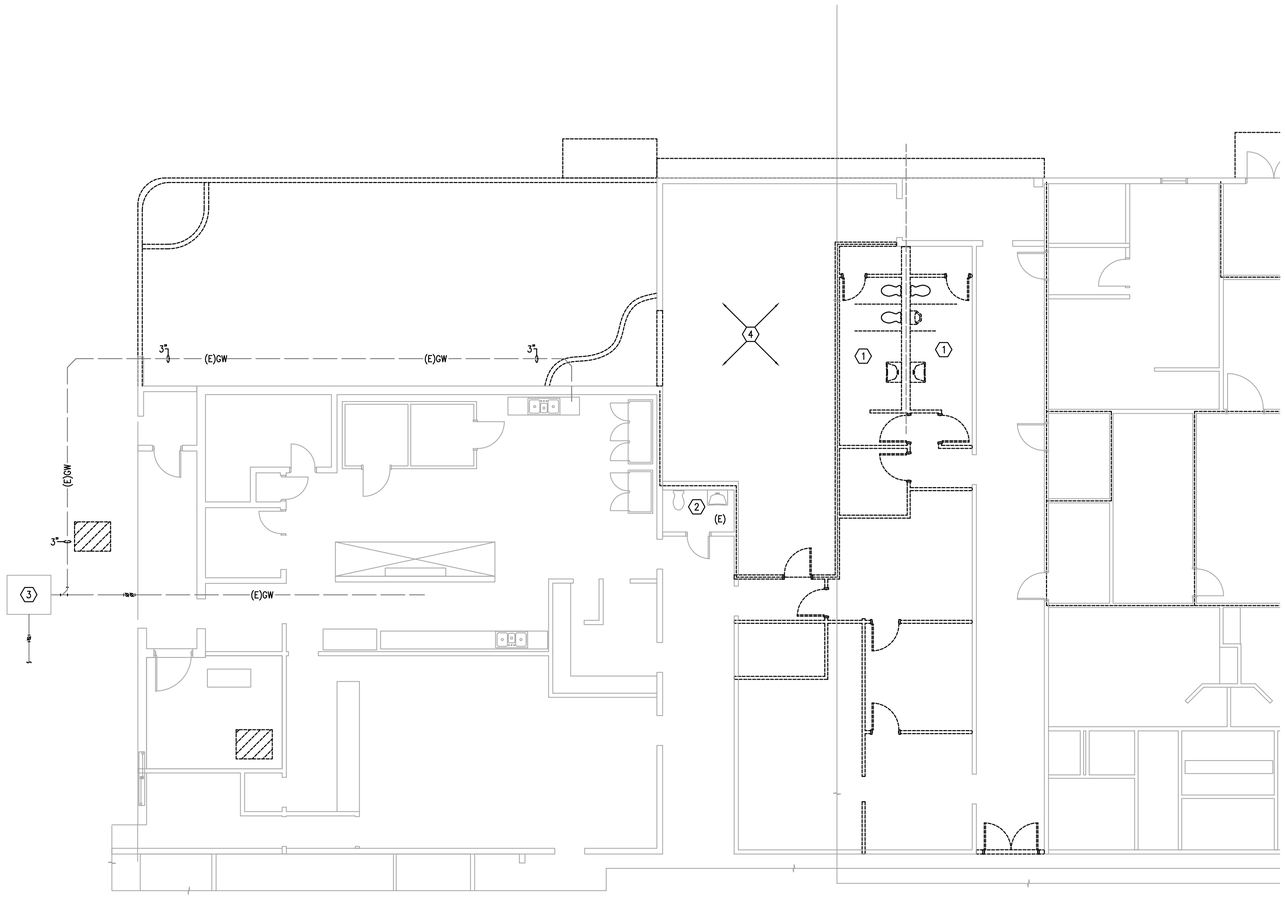

1 P-1 PLUMBING DEMO PLAN

1/8"=1'-0"

FIRE PROTECTION NOTE:

EXISTING SPRINKLER SYSTEM TO REMAIN, CONTRACTOR TO ADJUST/REWORKED LOCATIONS OF ALL AFFECTED SPRINKLER HEADS AND FIRELINES. CONTRACTOR IS RESPONSIBLE FOR TESTING AND INSPECTING EXISTING SYSTEM AND INSURE THAT ALL COMPONENTS ARE FULLY FUNCTIONING. A VISIT TO THE SITE WILL BE REQUIRED PRIOR TO BIDDING TO DETERMINE FULL SCOPE OF WORK.

GENERAL NOTES:

A. SIZES AND LOCATION OF EXISTING PIPINGS SHOWN WERE TAKEN FROM ENGINEERING PLANS FROM WHICH EXISTING SYSTEMS WERE INSTALLED. CONTRACTOR NEED TO FIELD VERIFY EXACT SIZES, CONDITIONS AND LOCATIONS OF INDICATED EXISTING UTILITIES.

B. ALL FIXTURES, EQUIPMENT AND PLUMBING LINES SHOWN WITH (E) ARE EXISTING TO REMAIN. UNLESS NOTED OTHERWISE.

C. THE CONTRACTOR IS FULLY RESPONSIBLE FOR PERFORMING ALL WORK UNDER THIS SECTION OF THE PROJECT IN FULL COMPLIANCE WITH ALL APPLICABLE LOCAL, STATE AND FEDERAL CODES INCLUDING THOSE PUBLISHED BY OSHA AND EPA.

D. THE EXTENT OF DEMOLITION WORK IS INDICATED ON THE ARCHITECTURAL DRAWINGS AND BY THE REQUIREMENTS OF THIS SECTION. A VISIT TO THE SITE WILL BE REQUIRED PRIOR TO BIDDING. CONTRACTOR SHALL IDENTIFY/VERIFY ALL PLUMBING LINES BEFORE STARTING ANY WORK.

E. CUTTING OF CONCRETE FLOORS SHALL BE BY MACHINE SAW, HOLES FOR PIPES (WALL OR FLOOR) SHALL BE DONE WITH CORE DRILLING EQUIPMENT WITH PRIOR APPROVAL FROM THE STRUCTURAL ENGINEERS. PATCH AND SEAL OPENINGS AS REQUIRED. COORDINATE ALL CUTTING AND PATCHING WITH OTHER TRADES.

F. ALL EXISTING PLUMBING FIXTURES AND EQUIPMENT REMOVED DURING CONSTRUCTION THAT ARE NOT TO BE REUSED SHALL BE REMOVED FROM THE JOB SITE AND PROPERLY RETURNED TO THE OWNER, IF DESIRED BY OWNER.

G. PROVIDE ALL WORK REQUIRED FOR THE REMOVAL OF FIXTURES TO BE DEMOLISHED AND INSTALLATION OF NEW FIXTURES AND ASSOCIATED SERVICES TO PROVIDE A COMPLETE AND OPERABLE SYSTEM UPON COMPLETION OF THE PROJECT.

H. PLUMBING CONTRACTOR SHALL BE RESPONSIBLE TO REVIEW THE ARCHITECTURAL DOCUMENTS IN ADDITION TO THE MECHANICAL AND ELECTRCIAL DOCUMENTS TO DETERMINE THE COMPLETE SCOPE OF WORK.

H. WHERE EXISTING FIXTURE OR EQUIPMENT IS TO BE REMOVED AND REINSTALLED AFTER REPLACEMENT OF PLUMBING LINES, BE CAUTIOUS TO PREVENT DAMAGE DURING THE REMOVAL AND REINSTALLATION. WHERE DAMAGED OCCURS, THE EQUIPMENT OR FIXTURE SHALL BE REPLACED OR REPAIRED TO THE SATISFACTION AND APPROVAL OF THE ARCHITECT AT NO ADDITIONAL COST TO THE OWNER.

I. COORDINATE DEMOLITION OF DIVISION 15 SYSTEMS AS REQUIRED WITH ALL OTHER TRADES.

PLUMBING DEMO KEYED NOTES:

1. DEMOLISH ALL PLUMBING FIXTURES IN THIS RESTROOM INCLUDING ALL ASSOCIATED PLUMBING LINES AND APPURTENANCES. CAP ALL DOMESTIC WATER LINES AND VENT UP TO LAST ACTIVE SOURCE. CAP DRAIN LINES BELOW SLAB.

2. REWORK/ADJUST EXISTING PLUMBING RISERS AND ROUGH-INS OF EXISTING FIXTURES TO ACCOMMODATE NEW FIXTURES TO BE INSTALLED BACK TO BACK WITH THE EXISTING. RE: 1/P-2.

3. DEMOLISH EXISTING GREASE TRAP AND REWORK/ADJUST EXISTING PLUMBING LINES AS NEEDED FOR CONNECTION TO NEW GREASE TRAP. RE: 1/P-2.

4. SOME SPRINKLER HEADS IN THE AREAS OF RENOVATIONS ARE CONNECTED TO THE DOMESTIC WATER LINES. CONTRACTOR TO VERIFY THIS CONDITIONS AND REMOVE SUCH INSTALLATION. FIRE PROTECTION CONTRACTOR TO PROVIDE NEW SPRINKLER SYSTEM (IN THE AREAS OF RENOVATIONS AND BUILDING ADDITION) CONNECTED TO MAIN FIRELINE AND COMPLY WITH ALL APPLICABLE CODES AND STANDARDS. A VISIT TO THE SITE WILL BE REQUIRED PRIOR TO BIDDING TO DETERMINE FULL SCOPE OF WORK.

KEY PLAN

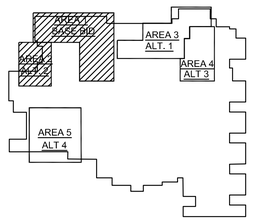

DBR
200 South 10th Street Suite 901
Mc Allen, Texas 78501
956.683.1640 p 956.683.1903 f
TBPE Firm Registration No. 2234

DBR Project Number	178007.000

AS	MG	JB	TL	–

PROJECT:

Starr County Memorial Hospital
MRI Addition and Renovation
128 N. FM Road 3167 Rio Grande City, Texas

DESIGN GROUP INTERNATIONAL
DELFINO GARZA JR., • ARCHITECT • 1701 MIER STREET • LAREDO, TEXAS 78043 • (956) 724-6268

STATE OF TEXAS
EDWARD PUENTES
102338
LICENSED
PROFESSIONAL ENGINEER

09/10/2018

SHEET
P-1

Plotted: Sep 6, 2018, 2:49 PM by user: tleochico - Saved: 9/6/2018 by user: tleochico
N:\17\178007.000\Drawings\0\P-178007-1.dwg

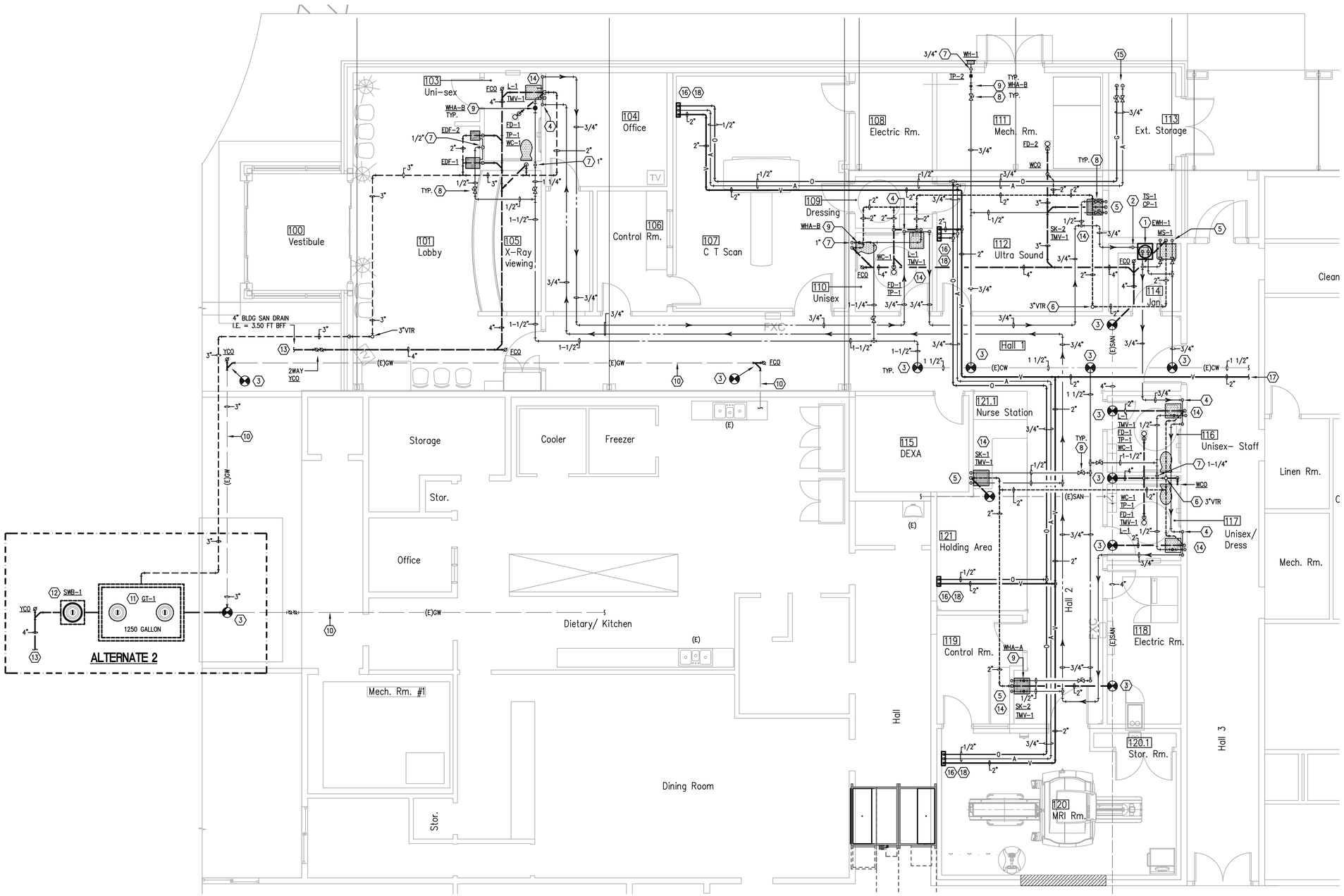

FIRE PROTECTION NOTE:

BUILDING HAS EXISTING SPRINKLER SYSTEM, CONTRACTOR TO REWORK/ADJUST ALL AFFECTED SPRINKLER HEADS AND FIRELINES INCLUDING SOME SPRINKLER SYSTEM IN THE AREA THAT ARE NOT CODE COMPLIANT AND NEED TO BE REDONE. SITE VISIT IS REQUIRED PRIOR TO BIDDING TO DETERMINE FULL SCOPE OF WORK. PROVIDE LIGHT HAZARDS PROTECTION FOR AREAS OF RENOVATIONS AND ADDITION, EXCEPT FOR MECHANICAL ROOMS AND ELECTRICAL ROOMS WHICH SHALL RECEIVE ORDINARY HAZARD, GROUP 2 PROTECTION. THE DESIGN AND INSTALLATION SHALL BE IN ACCORDANCE WITH NFPA 13, AND NFPA 24 AND ALL LOCAL CODES. SUBMIT SHOP DRAWINGS AND CALCULATIONS AS SPECIFIED.

NOTE:

(A) DRAWING IS DIAGRAMMATIC ONLY. CONTRACTOR SHALL COORDINATE EXACT LOCATIONS OF PIPING, DEVICES AND EQUIPMENT WITH BUILDING ELEMENTS AND THE WORK OF OTHER TRADES. REFER TO RISER DIAGRAMS FOR MORE SIZING INFORMATION AND OTHER REQUIREMENTS.

(B) EVERY EFFORT HAS BEEN MADE TO SHOW THE APPROXIMATE LOCATIONS OF CONNECTIONS TO THE EXISTING PIPING. CONTRACTOR NEED TO FIELD VERIFY EXACT SIZES, ELEVATIONS OF EXISTING SANITARY LINE, CONDITIONS AND LOCATIONS OF INDICATED EXISTING UTILITIES . ALL DISCREPANCIES BETWEEN CONTRACT DOCUMENTS AND ACTUAL JOB-SITE CONDITIONS SHALL BE RESOLVED BY THIS CONTRACTOR, WHO SHALL PRODUCE AS-BUILT DRAWINGS WHICH SHALL BE SUBMITTED TO THE ARCHITECT/OWNER FOR REVIEW.

MED GAS NOTES:

(A) COORDINATE ALL PIPING AND EQUIPMENT INSTALLATION WITH EQUIPMENT MANUFACTURER'S REPRESENTATIVE.

(B) MED GAS INSTALLATION TO COMPLY WITH THE LATEST NFPA LEVEL 3 SERVICES.

(C) BASE SIZING OF MED GAS ON 55 PSI.

(D) INSTALL VACUUM AND MED GAS PIPES ABOVE CEILING.

PLUMBING KEYED NOTES

(1) ELECTRIC WATER HEATER WITH RECIRCULATION SYSTEM, INSTALL ABOVE MOP SINK. SEE DETAIL 1/P-5.

(2) 3/4" HOT WATER RETURN DROP TO CIRCULATING PUMP WITH TIMER SWITCH AND AQUASTAT; SEE DETAIL 1/P-5.

(3) POINT OF CONNECTION TO EXISTING UTILITY, FIELD VERIFY EXACT LOCATION OF EXISTING PLUMBING LINE.

(4) 3/4" HW DROP FOR SERVICE TO LAVATORY, RUN RECIRCULATING LINE WITHIN 2 FEET OF HW ROUGH-IN FOR 2015 IECC COMPLIANCE.

(5) 1/2" H&CW DROP TO FIXTURE.

(6) CONNECT NEW VENT LINE TO EXISTING VTR, FIELD VERIFY EXACT LOCATION OF EXISTING VTR.

(7) COLD WATER DROP TO FIXTURE/S; SIZE AS NOTED. SEE PLUMBING RISER DIAGRAMS FOR CONTINUATION IN WALL OR CHASE.

(8) BALL VALVE ABOVE CEILING. PROVIDE ACCESS PANEL WHERE LOCATED IN AN INACCESSIBLE CEILING. PANEL SHALL BE 12"X12" PAINTED TO MATCH CEILING. PROVIDE MARKING OF VALVE LOCATION ALONG THE CEILING TILE.

(9) WATER HAMMER ARRESTOR, PROVIDE PROPERLY SIZED WATER HAMMER ARRESTOR FOR EACH GROUP OF FIXTURES WHETHER SHOWN OR NOT ON PLAN.

(10) EXISTING GREASE WASTE TO REMAIN, PROVIDE FCO/YCO AS SHOWN.

(11) GREASE TRAP EQUAL TO PARK GT-1250. RE: 13/P-5.

(12) SAMPLE WELL BASIN EQUAL TO PARK SWB-154. RE: 14/P-5.

(13) REFER TO CIVIL SITE UTILITY PLAN FOR CONTINUATION. CONTRACTOR TO BE RESPONSIBLE FOR COORDINATION, VERIFICATION AND CONNECTION OF ALL UTILITIES TO SITE UTILITY STUB-OUTS.

(14) PROVIDE POINT OF USE THERMOSTATIC MIXING VALVE (TMV-1) TO ALL SINKS AND LAVATORIES.

(15) MED GAS DROPS TO SYSTEM MANIFOLD. COORDINATE ALL ROUTING AND CONNECTIONS WITH MED GAS CONTRACTOR. REFER TO MANUFACTURER'S SPECIFICATIONS AND INSTALLATION GUIDE FOR MORE INFORMATION.

(16) UTILITY CENTER (HEAD WALL), COORDINATE AND VERIFY WITH OWNER FOR EXACT LOCATION. REFER TO MANUFACTURER'S GUIDE/TEMPLATE FOR DETAIL AND MORE INFORMATION. PROVIDE 1/2" MED GASES AND 2" VACUUM. COORDINATE ALL ROUTING AND CONNECTIONS WITH EQUIPMENT CONTRACTOR. INCLUDE/PROVIDE AN ALLOWANCE FOR ADDITIONAL 20 FEET IN CASE LOCATION IS MOVED DURING CONSTRUCTION PHASE. INCLUDE A LINEAR FOOT COST IF LOCATION IS MOVED MORE THAN 20 FEET.

(17) CONNECT VACUUM LINE TO EXISTING SYSTEM. FIELD VERIFY LOCATION OF EXISTING VACUUM SYSTEM.

(18) PROVIDE PVC SLEEVE FOR VACUUM BRANCH LINES BELOW SLAB. COORDINATE ROUTING AND ROUGH-IN LOCATION WITH EQUIPMENT CONTRACTOR.

KEY PLAN

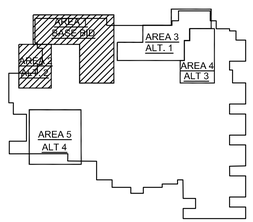

1 P-2 **PLUMBING PLAN**
3/16"=1'-0"

PROJECT:
Starr County Memorial Hospital
MRI Addition and Renovation
128 N. FM Road 3167 Rio Grande City, Texas

DESIGN GROUP INTERNATIONAL
DELFINO GARZA JR., • ARCHITECT • 1701 MIER STREET • LAREDO, TEXAS 78043 • (956) 724-6268

STATE OF TEXAS
EDWARD PUENTES
102338
LICENSED PROFESSIONAL ENGINEER
09/10/2018

DBR
200 South 10th Street Suite 901
Mc Allen, Texas 78501
956.683.1640 p 956.683.1903 f
TBPE Firm Registration No. 2234

DBR Project Number 178007.000

AS	MG	JB	TL	–

SHEET
P-2

Plotted: Sep 6, 2018, 2:50 PM by user: tleochico - Saved: 9/6/2018 by user: tleochico
N:\17\178007.000\Drawings\0P-178007-1.dwg

TYPICAL PLUMBING RISER DETAILS
(NOT ALL RISERS USED IN EVERY PROJECT.)

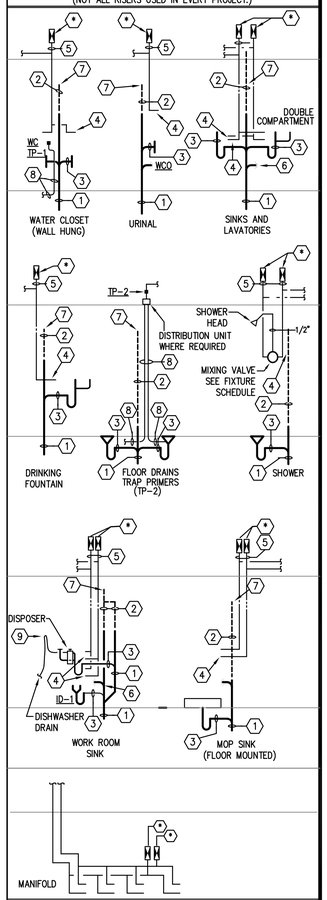

KEYED NOTES - TYPICAL RISER DIAGRAM DETAILS:
(NOT ALL RISERS USED IN EVERY PROJECT.)

1. REFER TO PLUMBING FIXTURE SCHEDULE FOR SOIL OR WASTE ROUGH-IN PIPE SIZE. MINIMUM SOIL OR WASTE DRAIN LINE SIZE (EXCEPT AS NOTED) FOR THIS FIXTURE.
2. REFER TO PLUMBING FIXTURE SCHEDULE FOR SANITARY VENT ROUGH-IN PIPE SIZE. MINIMUM SANITARY VENT BRANCH SIZE (EXCEPT AS NOTED) FOR THIS FIXTURE
3. REFER TO PLUMBING FIXTURE SCHEDULE FOR FIXTURE DRAIN ROUGH-IN PIPE SIZE. MINIMUM FIXTURE DRAIN AND TRAP SIZE (EXCEPT AS NOTED) FOR THIS FIXTURE
4. REFER TO PLUMBING FIXTURE SCHEDULE FOR WATER PIPING ROUGH-IN PIPE SIZE. MINIMUM WATER SUPPLY BRANCH SIZE (EXCEPT AS NOTED) FOR THIS FIXTURE.
5. WATER HAMMER ARRESTOR INLET; REFER TO ARRESTOR SCHEDULE FOR SIZE. LOCATION SHOWN HERE FOR INDIVIDUAL FIXTURE WILL VARY WHERE INCLUDED AS PART OF PLUMBING CHASE BATTERY OF PIPING. REFER TO RISER DIAGRAMS FOR MANIFOLD LOCATIONS. ARRANGE ALL WATER LINES TO GRAVITY DRAIN.
6. WALL CLEANOUTS SHALL BE PROVIDED AT ALL END OF BATTERY OR END OF BRANCH LINE FIXTURES (AT FULL SIZE) AND WHERE REQUIRED BY PLUMBING CODE OFFICIALS TO ASSURE COMPLETE ACCESS TO ALL PORTIONS OF DRAIN.
7. SANITARY VENT PIPES SHALL CONTINUE TO CEILING OR HEADER TOGETHER AT MINIMUM 42" ABOVE FINISHED FLOOR.
8. TRAP PRIMER LINE; SEE PLUMBING DETAILS SHEET. EXTEND AND CONNECT TO FLOOR DRAIN TRAP AS SHOWN.
9. AIR GAP FITTING; PROVIDE WHERE REQUIRED BY CODE.

PLUMBING GENERAL PLAN NOTES:

A. DRAINAGE PIPING INVERT ELEVATIONS NOTED ON FLOOR PLANS AS: INV. EL.= 0.00' BFF ARE BELOW FINISHED FLOOR TAKEN FROM FIRST FLOOR FINISHED ELEVATION OF 0.00' TO INSIDE BOTTOM OF PIPE.

B. PLUMBER SHALL FIELD VERIFY EXACT BUILDING FINISHED FLOOR ELEVATION AND THE INVERT ELEVATION OF ALL DRAIN LINES AT PROPOSED CONNECTING POINTS WITH SITE UTILITIES PRIOR TO INSTALLATION OF BUILDING PIPING.

C. ALL PIPE PASSING THROUGH FIRE RATED WALLS OR FLOOR SLABS SHALL BE SUPPORTED AT PENETRATION AND OPENINGS SHALL BE SEALED WITH APPROVED, NON-HARDENING, FIRE STOP MATERIALS AS SPECIFIED OR REQUIRED.

D. CONTRACTOR SHALL COORDINATE WITH THE STRUCTURAL CONDITIONS AT THE SITE AND PROVIDE PROPER ROUGH-IN CONNECTIONS REQUIRED WITHOUT DAMAGE TO STRUCTURE. WHERE STRUCTURAL MODIFICATIONS ARE NECESSARY, CONTRACTOR SHALL FIRST RECEIVE WRITTEN APPROVAL OF THE ARCHITECT AND STRUCTURAL ENGINEER.

E. THIS CONTRACTOR SHALL BE RESPONSIBLE FOR FIELD COORDINATING LOCATIONS AND ELEVATIONS OF ALL PLUMBING PIPING WITH OTHER TRADES PRIOR TO INSTALLATION. CORRECTIONS OR RELOCATIONS DUE TO MISALIGNED PIPE SHALL BE PERFORMED IN A TIMELY MANNER AT NO ADDITIONAL COST TO OWNER.

F. DO NOT SCALE THE PLUMBING DRAWINGS FOR ROUGH-IN WORK. CONTRACTOR SHALL REFER TO THE DIMENSIONED ARCHITECTURAL AND STRUCTURAL DRAWINGS TO FIELD DETERMINE EXACT LOCATIONS OF PLUMBING ROUGH-IN WORK.

G. SANITARY DRAINAGE PIPING 2" AND SMALLER SHALL HAVE A UNIFORM MINIMUM CONTINUOUS SLOPE OF 1/4 INCH PER FOOT OF RUN. DRAINAGE PIPING OF 4" SIZE AND LARGER SHALL SLOPE MINIMUM 1/8 INCH PER FOOT OF RUN. SLOPE ALL VENT PIPING MINIMUM 6" PER 100 FEET OF RUN BACK TO DRAIN.

H. STORM DRAINAGE PIPING SHALL HAVE A UNIFORM MINIMUM CONTINUOUS SLOPE OF 1/8 INCH PER FOOT OF RUN. SLOPES OF 1/4 INCH PER FOOT ARE PERMITTED WHERE NOTED ON PLAN OR AS REQUIRED.

I. PROVIDE BRACING TO PREVENT AXIAL MOVEMENT FOR ALL STORM DRAINAGE PIPING ABOVE GROUND. PROVIDE RESTRAINTS FOR ALL DRAINAGE PIPING AT ALL CHANGES IN DIRECTION AND AT ALL DIAMETER CHANGES GREATER THAN TWO PIPE SIZES. BRACES, BLOCKS, RODDING AND OTHER PERMANENT METHODS AS PRESCRIBED BY PIPE AND COUPLING MANUFACTURER SHALL BE ACCEPTABLE.

J. PROVIDE AND INSTALL CLEANOUTS AT EACH CHANGE OF DIRECTION OF THE BUILDING SANITARY DRAIN, AT MINIMUM 75' INTERVALS ALONG STRAIGHT RUNS OF MAIN DRAIN AND BRANCHES, AT EACH HORIZONTAL CHANGE OF DIRECTION IN SOIL OR WASTE PIPES GREATER THAN 45 DEGREES, AT END OF INDIVIDUAL BRANCH DRAINS LONGER THAN 5'. PROVIDE CLEANOUTS IN ACCORD WITH INTERNATIONAL PLUMBING CODE SECTION 708.

K. PROVIDE FITTINGS FOR SANITARY DRAIN WASTE AND VENT PIPING SYSTEMS IN COMPLIANCE WITH INTERNATIONAL PLUMBING CODE SECTION 708.

L. INSTALL EACH WATER HEATER AND ALL PLUMBING EQUIPMENT WITH ADEQUATE CLEARANCES FOR ACCESS BY SERVICE PERSONNEL AND WITH PROPER ORIENTATION FOR ELEMENT REMOVALS/REPLACEMENTS.

M. PROVIDE ISOLATION VALVES FOR ALL BRANCHES OFF DOMESTIC WATER MAINS. ALL PLUMBING SYSTEM VALVES SHALL BE INSTALLED IN ACCESSIBLE CEILING SPACES. WHERE CEILING IS NOT ACCESSIBLE, OR SPACE IS CONFLICTING, VALVES SHALL BE INSTALLED IN PARTITIONS OR PIPE CHASES. PROVIDE APPROVED PAINTED STEEL HINGED ACCESS PANELS IN LOCATIONS PRE-APPROVED BY THE ARCHITECT. PROVIDE STAINLESS STEEL ACCESS DOORS FOR SHOWER, LOCKER AND LOCKER TOILET ROOM PANELS. PROVIDE MARKINGS ON CEILING TILES ON LOCATIONS OF ISOLATION VALVES.

N. THIS CONTRACTOR SHALL BE RESPONSIBLE FOR FIELD COORDINATING LOCATIONS OF ALL SANITARY VENTS UP THROUGH ROOF TO MAINTAIN MINIMUM 15' CLEARANCE TO ANY BUILDING OUTDOOR AIR INLET.

GENERAL NOTES - PLUMBING FIXTURES

1. MOUNTING HEIGHT ELEVATION OF ALL WALL HUNG OR COUNTER MOUNTED FIXTURES SHALL BE COORDINATED WITH ARCHITECTURAL DRAWINGS PRIOR TO INSTALLATION OF ROUGH-IN WORK.
2. FOR ALL FIXTURES AND EQUIPMENT WITH ASSOCIATED TRIM OR COMPONENT ACCESSORIES PROVIDED UNDER SEPARATE DIVISIONS AND REQUIRING PLUMBING CONNECTIONS; THIS CONTRACTOR SHALL FIELD COORDINATE EXACT REQUIREMENTS OF, MAKE PROVISIONS FOR, AND SUPPLY ALL MATERIALS AND LABOR FOR MAKING FINAL CONNECTIONS.
4. CONTRACTOR SHALL REFER TO SHOP DRAWINGS OF EQUIPMENT TO BE SUPPLIED FOR FINAL COORDINATION OF ALL ROUGH-IN OPENINGS BEFORE BEGINNING WORK.
5. ALL FIXTURE AND EQUIPMENT STUB-OUTS SHALL BE PROVIDED WITH A STOP VALVE. ALL FIXTURE STOPS SHALL BE SOLID BRASS, LOOSE KEY OPERATED, CHROME PLATED (WHERE EXPOSED), AND FITTED TIGHT TO CHROME PLATED BRASS WALL ESCUTCHEON PLATES. SUPPLY RISERS SHALL BE STAINLESS STEEL FLEXIBLE CONNECTORS.
6. ALL P-TRAPS WITHIN THE BUILDING, ABOVE GRADE AND EXPOSED TO INSPECTION SHALL BE C.P. ADJUSTABLE, CAST BRASS WITH CLEANOUT PLUG. PROVIDE CAST BRASS SLIP NUTS AND WASHERS, 17 GAGE SEAMLESS TUBULAR BRASS DRAIN TO WALL AND WALL FLANGE. PROVIDE McGUIRE No. 8872C, 1-1/4" P-TRAP FOR ALL LAVATORIES AND SIMILAR FIXTURES PROVIDE McGUIRE No. 8912C, 1-1/2" P-TRAP FOR ALL SINKS AND SIMILAR FIXTURES.
7. PROVIDE DEEP SEAL P-TRAP FOR ALL DRAINS OF INFREQUENT USE OR REQUIRING TRAP PRIMER.
8. ALL ROUGH IN OPENINGS SHALL BE FITTED WITH CHROME PLATED, WROUGHT BRASS DEEP BELL OR BOX ESCUTCHEON PLATES FITTED TIGHT TO THE PIPE AND FLUSH TO THE WALL. STEEL ESCUTCHEON PLATES ARE NOT ACCEPTED.
9. ALL EXPOSED BRASS SHALL BE CHROME PLATED.
10. ALL HANDICAPPED ACCESSIBLE FIXTURES INDICATED WITH ♿ SHALL BE PROVIDED OF APPROVED TYPES AND WITH REQUIRED CONTROLS AND INSTALLED TO HEIGHTS AND CLEARANCES, AS PRESCRIBED BY AMERICANS WITH DISABILITIES ACT (ADA). FIXTURES SHALL COMPLY WITH ALL FEDERAL, STATE, AND LOCAL ACCESSIBILITY CODE REQUIREMENTS. REFER TO ARCHITECTURAL DRAWINGS FOR DIMENSIONED MOUNTING HEIGHTS AND SPECIFIED CLEARANCE REQUIREMENTS. PROVIDE FIXTURES WITH DEPTHS AT MAXIMUM PERMITTED AND AVAILABLE FOR INTENDED FIXTURE USE.
11. ALL WHEELCHAIR LAVATORY AND SINK PIPING WHERE EXPOSED SHALL BE INSULATED. PROVIDE OFFSET DRAIN FITTINGS WHERE REQUIRED TO PROVIDE MINIMUM CLEARANCES. REFER TO SPECIFICATIONS SECTION 15440.
12. ALL SINKS FOR HANDICAPPED USE SHALL BE STAMPED WITH DRAIN OUTLET AT REAR OF BOWL.
13. PLUMBING FIXTURES SHALL BE OF WATER CONSERVATION TYPE IN ACCORDANCE WITH PLUMBING CODE REQUIREMENTS FOR WATER SAVING PERFORMANCE. LAVATORY AND SINK FAUCETS SHALL INCLUDE 2.2 GPM FLOW CONTROL.
14. ORIENT ADA WATER CLOSET FLUSH VALVE WITH OPERATOR ON WIDE SIDE OF ENCLOSURE.
15. SEAL ALL SPACES BETWEEN PLUMBING FIXTURES AND MOUNTING SURFACES WITH WHITE LATEX CAULK WIPED SMOOTH AND FLUSH WITH FIXTURE.
16. FLOOR DRAINS SHALL BE INSTALLED AT LOW POINTS OF UNIFORMLY SLOPED FLOOR. CONTRACTOR SHALL FIELD COORDINATE WITH STRUCTURAL TO INSURE FLOORS ARE SLOPED UNIFORMLY ACROSS ENTIRE TOILET ROOMS OR OVER AS WIDE AN AREA AS PRACTICAL FOR OPEN AREA FLOOR DRAINS. CONVEX FLOOR SLOPE IN THE IMMEDIATE VICINITY OF THE FLOOR DRAIN IS NOT ACCEPTABLE.

PLUMBING FIXTURE SCHEDULE

PLAN MARK	MINIMUM ROUGH-IN SIZES					DESCRIPTION
	WST & VENT		DRAIN	CW	HW	
WATER CLOSET WC-1 ♿	4"	2"	4"	1"	----	AMERICAN STANDARD No.3461.128 "MADERA" WHITE V.C. ELONGATED SIPHON JET FLOOR MTD. (1.28 GPF) BOWL WITH TOP SPUD, BOLT CAPS, BEMIS 1955 SSCT WHITE OPEN FRONT SEAT, LESS COVER AND SLOAN ROYAL 111-1.28 HET FV.
LAVATORY L-1 ♿	2"	1-1/2"	1-1/4"	1/2"	1/2"	AMERICAN STANDARD No.355.012 RECTANGULAR WALL MOUNT LAVATORY WITH 4" HOLES ON CENTERS BACK OVERFLOW. PROVIDE CHICAGO 802-VE2805-665ABCP, 0.5 GPM METERING FAUCET, FIXED GRID DRAIN, CHROME PLATED BRASS P-TRAP, STOPS AND SUPPLIES AND CARRIER, WITH TMV-1. REFER TO ARCHITECTURAL PLAN FOR MOUNTING HEIGHT.
SINK SK-1 ♿	2"	2"	1-1/2"	1/2"	1/2"	ELKAY No. LRAD-191865LPD "LUSTERTONE" ONE HOLE PUNCH STAINLESS STEEL SINK. PROVIDE ELKAY LKB721C, DECK-MOUNTED SENSOR FAUCET, GOOSENECK,SWING SPOUT FAUCET, BATTERY POWER, ELKAY No. LK-18 GRID DRAIN STRAINER, TAILPIECE, CAST BRASS P-TRAP WITH CO, STOPS AND SUPPLIES. PROVIDE OFFSET TAILPIECE AND INSULATION KIT WHERE FIXTURE TRIM IS EXPOSED. SINK TO HAVE REAR CENTER DRAIN.
SINK SK-2 SCRUB SINK ♿	2"	2"	1-1/2"	1/2"	1/2"	ELKAY EWS2520SACTMC WALL HUNG SCRUB SINK, WITH LKB722C SENSOR FAUCET AC/BATTERY POWER., MODEL LKB722C. WITH LK723 TMV SET AT MAX 110°F. #14 TYPE 304 SS, LK188 GRID STRAINER, TAILPIECE, LK-55 CONTINUOUS WASTE, CAST BRASS P-TRAP WITH CO, STOPS AND SUPPLIES. PROVIDE INSULATION KIT WHERE EXPOSED.
ELECTRIC DRINKING FOUNTAIN EDF-1 STANDARD EDF-2 SAME AS EDF-1 EXCEPT ADA MOUNTING ♿	2"	2"	1-1/4"	1/2"	---	ELKAY EMABF8, WALL MOUNT WATER COOLER. LEAD FREE., SINGLE UNIT WITH PUSH BARS AND WALL HANGER. UNIT TO HAVE CAPACITY OF 8.0 GPH COOLED TO 50°F WITH 80°F AMBIENT TEMP. 1/5 HP 4.0 FLA. WIRED FOR 120V/60/1 POWER. PROVIDE ALL STAINLESS STEEL CABINET AND CANE APRON FOR PROJECTING UNITS, TRAP AND SUPPLY AS PER SPECS AND GEN. NOTES AND ZURN, OR EQUAL, FLOOR MOUNTED PLATE TYPE CARRIER. REFER TO ARCHITECTURAL PLAN FOR MOUNTING HEIGHT.
MOP SINK MS-1	3"	2"	3"	1/2"	1/2"	FIAT TSB 100 24 X 24 X 12 WITH STAINLESS STEEL CAP AND CAULK OUTLET DRAIN WITH N.B. STRAINER. PROVIDE CHICAGO No.897-RCF WALL MOUNT FAUCET WITH INTEGRAL STOPS, WALL BRACE AND VACUUM BREAKER.
TRAP PRIMER TP-1	----	----	1/2"	----	----	PROVIDE SLOAN No. VBF-72-A1 FLUSH VALVE VACUUM BREAKER TRAP REFILL SUPPLY. AFFIX TO WATER CLOSET NEAREST TO AND IN SAME ROOM AS DRAIN SUPPLIED. ALL EXPOSED TO BE CHROME PLATED AND RUN SHORT AS POSSIBLE WALL. CONCEALED DRAIN TUBING SHALL BE 1/2" TYPE 'K' SOFT COPPER SLOPING UNIFORMLY TO DRAIN.
TRAP PRIMER TP-2	----	----	1/2"	1/2"	----	PRECISION PLUMBING PRODUCTS, INC. "OREGON" NO.1 FULLY AUTOMATIC TRAP PRIMER VALVE. INSTALL CONCEALED IN ACCESSIBLE LOCATION, BEHIND APPROVED ACCESS PANEL OR EXPOSED IN MECHANICAL EQUIPMENT AREAS WITH APPROVED TRAP PRIMER DISTRIBUTION UNIT. INSTALL AT MINIMUM 15" ABOVE FINISHED FLOOR.
FLOOR DRAIN FD-1	3"	2"	----	----	----	ZURN No.ZN-415 CAST IRON DRAIN WITH 6" DIAMETER TYPE 'B' STRAINER AND 1/2" IPS TRAP PRIMER CONNECTION. (PLUGGED WHERE NOT REQUIRED)
FLOOR DRAIN FD-2	3"	2"	----	----	----	ZURN Z415I WITH TYPE "I" CAST IRON DRAIN WITH 7" DIA. DEEP FLANGE GRATE, W/ ACID RESISTANT EPOXY COATED INTERIOR, RECESSED HINGED GRATE. PROVIDE TRAP GUARD.
WALL CLEAN-OUT WCO	----	----	----	----	----	ZURN No. ZN-1443 DURO-COATED CAST IRON CLEANOUT TEE WITH COUNTER-SUNK GASKET, WATERTIGHT THREADED PLUG AND SQUARE SMOOTH ACCESS COVER WITH VANDAL PROOF SCREWS.
FLOOR CLEAN-OUT FCO	----	----	----	----	----	ZURN No. ZN-1400 DURO-COATED CAST IRON CLEANOUT WITH COUNTER-SUNK PLUG AND SUITED FOR THE INSTALLATION REQUIRED. VERIFY TOP FINISHES WITH ARCHITECT.
WALL HYDRANT WH-1	----	----	----	3/4"	----	ZURN NO.Z-1300 RECESSED NON-FREEZE BRONZE WALL BOX, ANTI-SIPHON HYDRANT, WITH LOOSE KEY OPERATOR AND POLISHED NICKEL BRONZE LOCKING COVER. INSTALL WITH FACE FLUSH AND SQUARE TO FINISHED WALL. SECURE WITH WALL CLAMP AND SET SCREW. PROVIDE EXTENSION AS REQUIRED TO PLACE VALVE SEAT IN HEATED ROOM SPACE.
ELECTRIC WATER HEATER EWH-1	----	----	----	SEE PLAN		RHEEM No.EGSP30, 30 GALLON STORAGE WITH 4.5 KW ELEMENT WIRED FOR 208 V 3 PH POWER. VERIFY WITH ELECTRICAL CONTRACTOR PRIOR TO ORDERING EQUIPMENT. UNIT SHALL HAVE CAPACITY OF 20 GPH RECOVERY AT 60°F TEMPERATURE RISE PROVIDE ASME TEMPERATURE AND PRESSURE RELIEF VALVE, AND THERMOMETER IN HW OUTLET PIPING. WITH ET-1+AMTROL ST-5-C.
CIRCULATING PUMP CP-1	----	----	----	----	3/4"	GRUNDFOS MODEL UP15-42SF, ALL BRONZE FLANGED PUMP. 1/25 HP WIRED FOR 120/60/1 POWER AND FITTED WITH REMOTE HEAT SENSING AQUASTAT CONTROLLER AND SHUT-OFF TIMER TS-1.
TIME SWITCH TS-1	----	----	----	----	----	TORK ELECTROMECHANICAL 24 HOUR TIME SWITCH POWERED BY A SELF STARTING SYNCHRONOUS MOTOR. INSTALL ON WALL ADJACENT TO CIRCULATING PUMPS. COORDINATE WITH ELECTRICAL AND PROVIDE FOR 120/1/60 POWER REQUIREMENT.
THERMOSTATIC MIXING VALVE TMV-1				1/2"	1/2"	POWERS No. LFe480 ADJUSTABLE POINT-OF-USE THERMOSTATIC MIXING VALVE, ASSE 1070 WITH INLET CHECK STOPS TO LIMIT HOT WATER TEMPERATURE TO MAXIMUM 120° F AT FAUCET OUTLET. SUPPLY CW TO MIXING VALVE FROM CW RISER TO FAUCET. INSTALL BELOW FIXTURE AND HIGH AS POSSIBLE TO PROVIDE NEAT AND CLEAN APPEARANCE.

PLUMBING PIPE MATERIALS SCHEDULE

PIPING SYSTEM	PIPING MATERIAL
SANITARY DRAINS AND VENTS INSIDE BUILDING AND BELOW FLOOR	SCHEDULE 40 PVC PIPE
SANITARY DRAINS AND VENTS INSIDE BUILDING AND ABOVE FLOOR	SCHEDULE 40 PVC PIPE
SANITARY DRAINS AND VENTS INSIDE BUILDING AT PLENUM CEILING	SCHEDULE 40 PVC PIPE
DOMESTIC HOT & COLD WATER INSIDE BUILDING AND ABOVE GROUND	COPPER, TYPE "L" HARD DRAWN
FIRE SPRINKLER ABOVE GROUND - 2" AND SMALLER	BLACK STEEL SCHEDULE 40
FIRE SPRINKLER ABOVE GROUND - 2-1/2" AND LARGER	BLACK STEEL SCHEDULE 10

NOTE: REFER TO SPECIFICATIONS FOR COMPLETE PIPING MATERIAL REQUIREMENTS FOR ASSOCIATED PIPING SYSTEMS.

WATER HAMMER ARRESTOR SCHEDULE

(*) P.D.I. SYMBOL	FIXTURE UNITS	SIZE
(A)	1-11	1/2" NPT
(B)	12-32	3/4" NPT
(C)	33-60	1" NPT
(D)	61-113	1 1/4" NPT
(E)	114-154	1 1/2" NPT
(F)	155-330	2" NPT

PIPING RISER DIAGRAMS/TYPICAL RISER DETAILS ILLUSTRATE WATER HAMMER ARRESTORS FOR FIXTURE WATER PIPE OPENINGS. ALL ARRESTORS SHALL BE SIZED AS INDICATED ON DRAWINGS OR IN ACCORDANCE WITH THIS SCHEDULE, WHICHEVER PLACES THE MOST STRINGENT REQUIREMENT.

PROVIDE ARRESTORS IN ACCORDANCE WITH THE REQUIREMENTS OF PLUMBING DRAINAGE INSTITUTE (PDI) STANDARD PDI-WH-201. THE USE OF AIR CHAMBERS SHALL NOT BE ACCEPTABLE.

WATER HAMMER ARRESTORS SHALL HAVE LIFETIME WARRANTY AND SHALL BE CERTIFIED BY THE MANUFACTURER AS SUITABLE FOR INSTALLATION WITHOUT A REQUIREMENT FOR ACCESS PANELS. NONETHELESS, ACCESS PANELS SHALL BE PROVIDED IF AND AS REQUIRED BY THE LOCAL AUTHORITY HAVING JURISDICTION (AHJ).

PROJECT:
Starr County Memorial Hospital
MRI Addition and Renovation
128 N. FM Road 3167 Rio Grande City, Texas

DESIGN GROUP INTERNATIONAL
DELFINO GARZA JR., • ARCHITECT • 1701 MIER STREET • LAREDO, TEXAS 78043 • (956) 724-6268

STATE OF TEXAS
EDWARD PUENTES
102338
LICENSED PROFESSIONAL ENGINEER
09/10/2018

DBR
200 South 10th Street Suite 901
Mc Allen, Texas 78501
956.683.1640 p 956.683.1903 f
TBPE Firm Registration No. 2234

DBR Project Number 178007.000

AS	MG	JB	TL	–

SHEET
P-4

Plotted: Sep 6, 2018, 3:7 PM by user: tleochico - Saved: 9/6/2018 by user: tleochico
N:\17\178007.000\Drawings\0P-178007-DETAILS.dwg

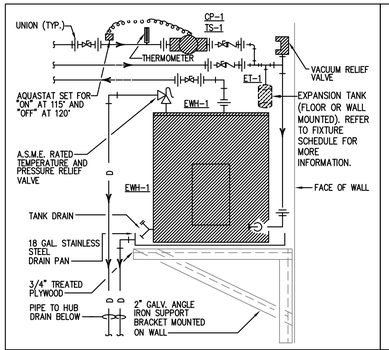

1 ELECTRIC WATER HEATER
NOT TO SCALE

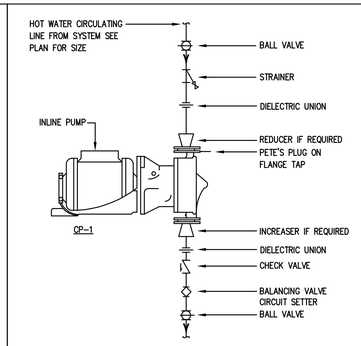

2 IN-LINE CIRCULATING PUMP DETAIL
NOT TO SCALE

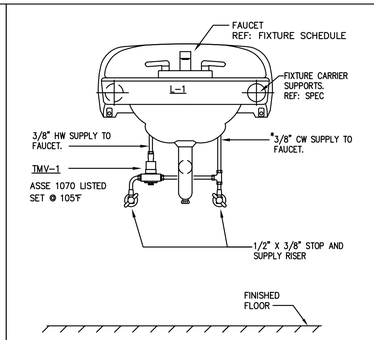

3 TMV INSTALLATION DETAIL
NOT TO SCALE

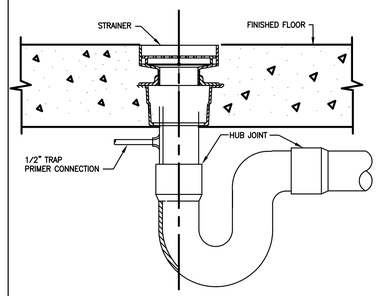

4 FLOOR DRAIN DETAIL (FD-2)
NOT TO SCALE

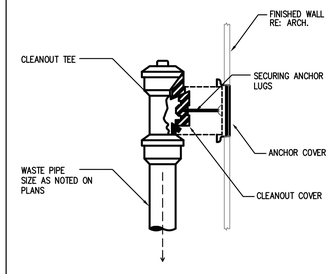

5 WALL CLEAN-OUT DETAIL (WCO)
NOT TO SCALE

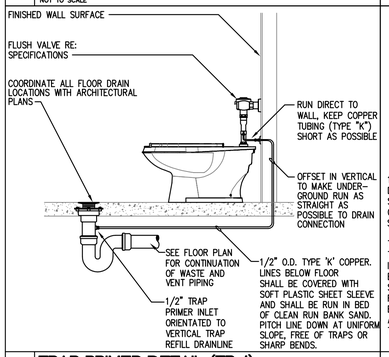

6 TRAP PRIMER DETAIL (TP-1)
NOT TO SCALE

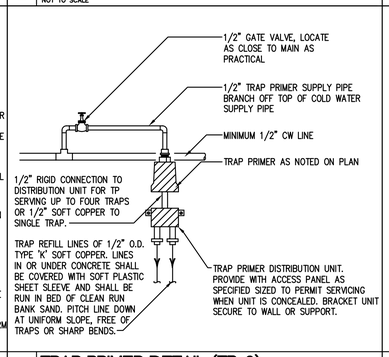

7 TRAP PRIMER DETAIL (TP-2)
NOT TO SCALE

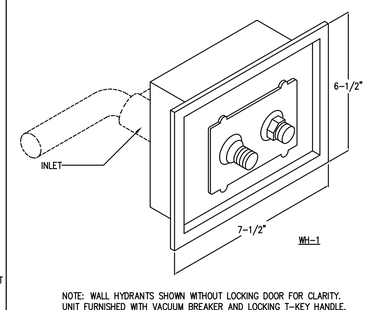

NOTE: WALL HYDRANTS SHOWN WITHOUT LOCKING DOOR FOR CLARITY. UNIT FURNISHED WITH VACUUM BREAKER AND LOCKING T-KEY HANDLE.

8 WALL HYDRANT
NOT TO SCALE

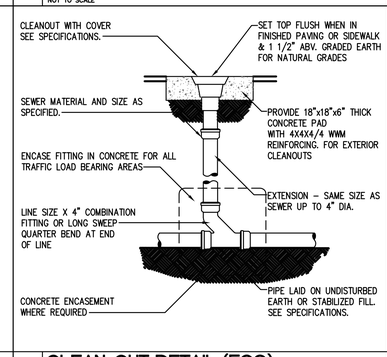

9 CLEAN-OUT DETAIL (FCO)
NOT TO SCALE

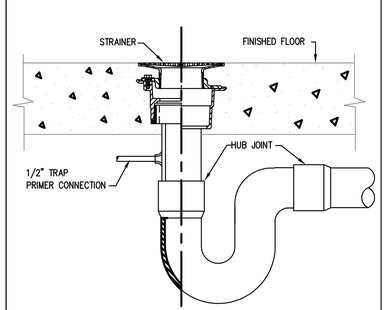

10 FLOOR DRAIN DETAIL (FD-1)
NOT TO SCALE

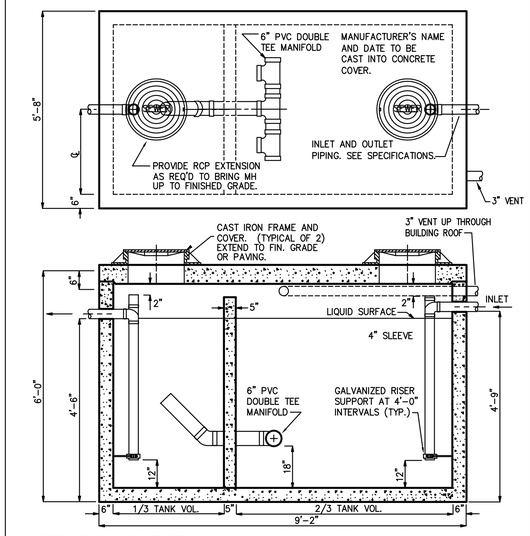

SPECIFICATIONS: GALLON (GT-1) WITH INTERIOR CHEMICAL PROOF PVC LINERS.
CONCRETE: CLASS 1 CONCRETE WITH DESIGN STRENGTH OF 4500 PSI AT 28 DAYS.
REINFORCEMENT: GRADE 60 REINFORCED. NO. 4 STEEL REBAR TO CONFORM TO ASTM A615 ON 12" CENTERS OR EQUAL.
MANHOLE COVERS: MANHOLE FRAMES AND COVERS SHALL BE MANUFACTURED OF GREY CAST IRON CONFORMING TO ASTM A48-76 CLASS 35. MANHOLE SHALL HAVE 24" INSIDE DIAMETER AND BE TRAFFIC DUTY.

GREASE INTERCEPTOR SCHEDULE								
MODEL NO.	CAPACITY USGal	GREASE CAP. (LBS)	EMPTY WT (LBS)	LENGTH L	WIDTH W	HEIGHT H	INLET FL1	OUTLET FL2
GTA-1250	1,250	2,900	15,500	9'-0"	6'-0"	6'-0"	4'-9"	4'-6"

13 GREASE INTERCEPTOR DETAIL (GT-1)
NOT TO SCALE

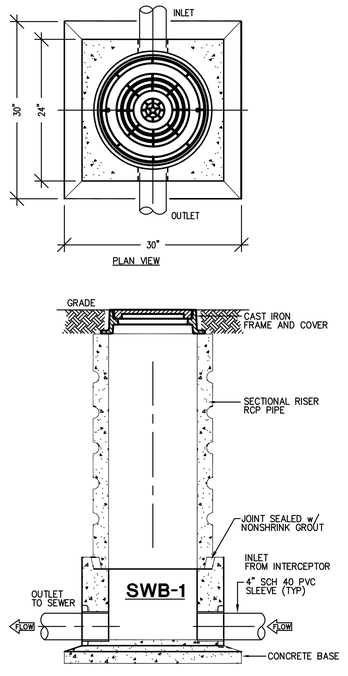

14 SAMPLE WELL BASIN DETAIL
NOT TO SCALE

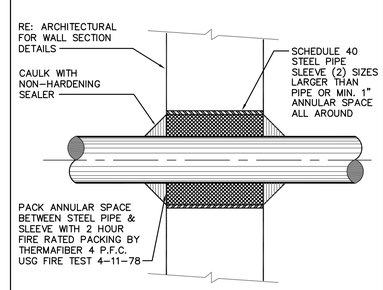

11 FIRE WALL PENETRATION
NOT TO SCALE

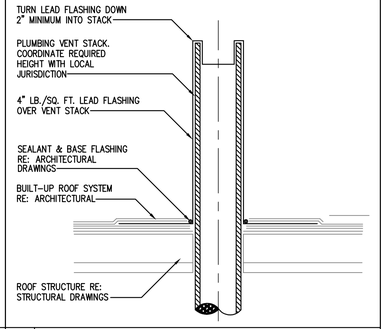

12 VENT THRU ROOF
NOT TO SCALE

PROJECT:
Starr County Memorial Hospital
MRI Addition and Renovation
128 N. FM Road 3167 Rio Grande City, Texas

DESIGN GROUP INTERNATIONAL
DELFINO GARZA JR., • ARCHITECT • 1701 MIER STREET • LAREDO, TEXAS

STATE OF TEXAS
EDWARD PUENTES
102338
LICENSED
PROFESSIONAL ENGINEER
09/10/2018

DBR
200 South 10th Street Suite 901
Mc Allen, Texas 78501
956.683.1640 p 956.683.1903 f
TBPE Firm Registration No. 2234

DBR Project Number 178007.000

AS	MG	JB	TL	–

SHEET
P-5

Plotted: Sep 6, 2018, 3:8 PM by user: tleochico - Saved: 9/6/2018 by user: tleochico
N:\17\178007.000\Drawings\0P-178007-DETAILS.dwg

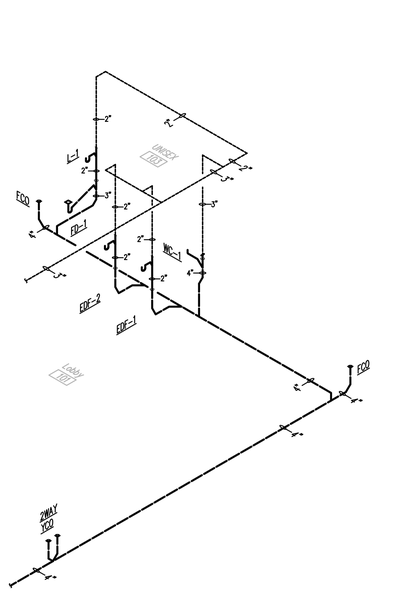

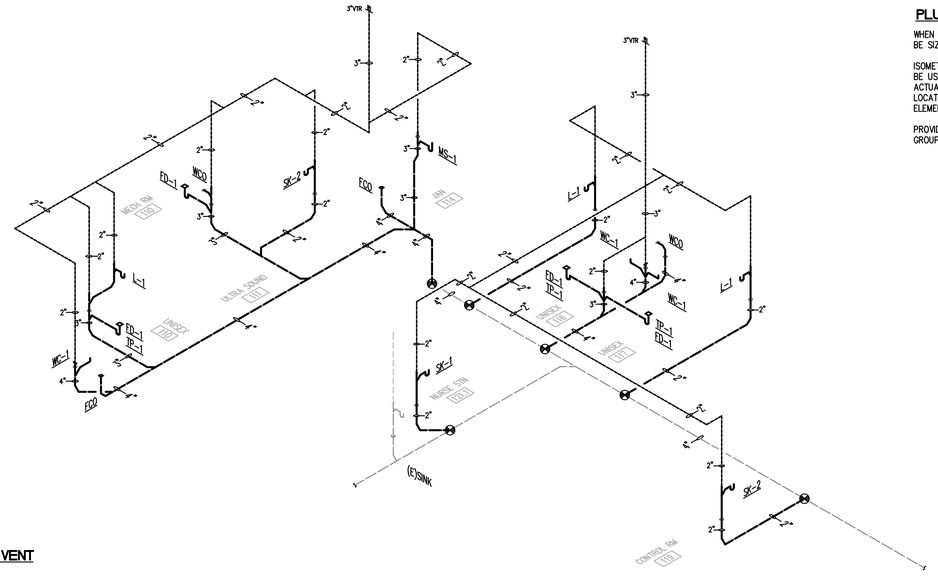

SEWER AND VENT

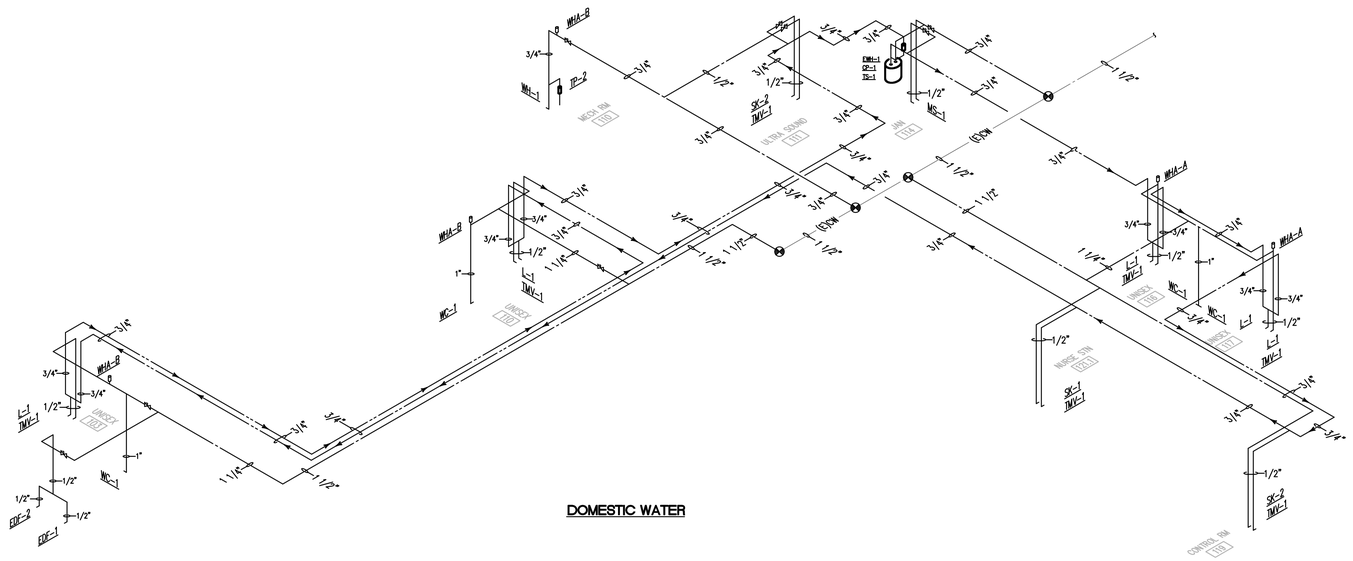

DOMESTIC WATER

PLUMBING RISERS

1 / P-6 NTS

PLUMBING RISER NOTES:

WHEN NOT SHOWN ON PLANS, INDIVIDUAL FIXTURE CONNECTIONS SHALL BE SIZE AS SHOWN ON PLUMBING FIXTURE SCHEDULE.

ISOMETRIC DIAGRAMS ARE FOR SIZING PURPOSES ONLY AND SHALL NOT BE USED FOR MATERIAL TAKE-OFFS, OR BE CONSTRUED TO INDICATE ACTUAL SITE INSTALLATION. CONTRACTOR SHALL COORDINATE EXACT LOCATIONS OF PIPING, DEVICES AND EQUIPMENT WITH BUILDING ELEMENTS AND THE WORK OF OTHER TRADES.

PROVIDE PROPERLY SIZED WATER HAMMER ARRESTORS FOR EACH GROUP OF FIXTURES WHETHER INDICATED OR NOT ON PLAN.

KEY PLAN

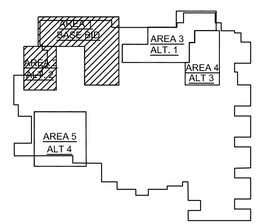

PROJECT:

Starr County Memorial Hospital
MRI Addition and Renovation
128 N. FM Road 3167 Rio Grande City, Texas

DESIGN GROUP INTERNATIONAL
DELFINO GARZA JR., • ARCHITECT • 1701 MIER STREET • LAREDO, TEXAS 78043 • (956) 724-6268

STATE OF TEXAS
EDWARD PUENTES
102338
LICENSED PROFESSIONAL ENGINEER
09/10/2018

DBR
200 South 10th Street Suite 901
Mc Allen, Texas 78501
956.683.1640 p 956.683.1903 f
TBPE Firm Registration No. 2234

DBR Project Number	178007.000

AS	MG	JB	TL	–

SHEET
P-6

Plotted: Sep 6, 2018, 2:51 PM by user: tleochico - Saved: 9/6/2018 by user: tleochico
N:\17\178007.000\Drawings\0P-178007-1.dwg