UTRGV

The University of Texas Rio Grande Valley

SCHOOL OF MEDICINE

TEAM BASED LEARNING CENTER

PROJECT NO: 903-1159

EDINBURG, TX

A17021.00

100% CONSTRUCTION DOCUMENTS

NOVEMBER 08, 2018

UNIVERSITY OF TEXAS RIO GRANDE VALLEY
TEAM BASED LEARNING CENTER
100% CONSTRUCTION DOCUMENTS
NOVEMBER 08, 2018

Architect
muñoz & company
SAN ANTONIO, TEXAS

The University of Texas System
THE OFFICE OF FACILITIES PLANNING & CONSTRUCTION
AUSTIN, TEXAS

Code Consultant
GARABEDIAN ASSOCIATES
HELOTES, TEXAS

Mechanical-Electrical-Plumbing Engineer
HALFF ASSOC., INC.
MCALLEN, TEXAS

Landscape Architect
SSP DESIGN
BROWNSVILLE, TEXAS

Technology and Security Consultant
COMBS CONSULTING GROUP
SAN ANTONIO, TEXAS

Civil Engineer
PEREZ CONSULTING ENGINEERS
MCALLEN, TEXAS

Structural Engineer
INTELLIGENT ENGINEERING SERVICES
MCALLEN, TEXAS

BUILDING CODE ANALYSIS

DESCRIPTION OF WORK

NEW TWO STORY BUILDING WITH STUDY SPACES AND LARGE CLASSROOM ON LEVEL ONE. ADMINISTRATIVE OFFICES AND COLLABORATIVE SPACES PROVIDED ON LEVEL TWO.

APPLICABLE CODE

2015 INTERNATIONAL BUILDING CODE
2012 INTERNATIONAL MECHANICAL CODE
2012 INTERNATIONAL PLUMBING CODE
2011 NATIONAL ELECTRICAL CODE
2012 INTERNATIONAL FUEL GAS CODE
2015 NATIONAL FIRE PROTECTION ASSOCIATION 101, THE LIFE SAFETY CODE
2015 NATIONAL FIRE PROTECTION ASSOCIATION 1 FIRE CODE
2012 TEXAS ACCESSIBILITY STANDARD
2010 ASHRAE 90.1
SECO WATER EFFICIENCY STANDARD
NATIONAL ELECTRICAL SAFETY CODE
2015 IECC
SECO'S WATER EFFICIENCY STANDARDS FOR STATE BUILDINGS AND INSTITUTIONS OF HIGHER EDUCATION FACILITIES

REFER TO LIFE SAFETY FOR DETAILED CODE ANALYSIS

LIST OF ALTERNATES

ALTERNATE NO. 1:
PROVIDE A SBS MODIFIED BITUMINOUS MEMBRANE ROOF SYSTEM PER SPECIFICATION SECTION 075216, IN LIEU OF "TORCH APPLIED" SPECIFICATION SECTION 075500.

ALTERNATE NO. 2:
PROVIDE CAT 6A IN LIEU OF CAT 6 CABLE. REFER TO TECHNOLOGY DRAWINGS AND SPECIFICATIONS.

ALTERNATE NO. 3:
PROVIDE AIR FLOW MEASURING USING THERMAL DISPERSION ON THE VAV BOXES.

ALTERNATE NO.4:
PROVIDE AND INSTALL A 100 GALLON CAPACITY GREASE INTERCEPTOR AND ASSOCIATED PIPING FOR A FULLY OPERATIONAL UNIT AS INDICATED ON THE DRAWINGS.

ALTERNATE NO. 5:
PROVIDE 10'X35' GRASS PAVER AREA FOR TEMPORARY CHILLER AT NW CORNER, AS INDICATED ON DRAWINGS. PROVIDE ELECTRICAL CONNECTION FOR TEMPORARY CHILLER AS INDICATED ON DRAWINGS.

ALTERNATE NO. 6:
PROVIDE WHEELCHAIR ACCESSIBLE WALKWAY AT SOUTH SIDE OF BUILDING AS INDICATED ON DRAWINGS.

ALTERNATE NO. 7:
PROVIDE LANDSCAPE MATERIALS AS PER PLAN L2.02 IN LIEU OF LANDSCAPE MATERIALS FOR BASE BID SHEET L2.01.

ALTERNATE NO. 8:
PROVIDE CARD READERS AS INDICATED AT SECURITY PLAN TS-201, TS-202 AND SECURTIY SCHEDULE TS-401.

ALTERNATE NO. 9:
PROVIDE EPOXY COATED CONDENSER COIL AS PER 23 64 26 ROTARY SCREW WATER CHILLERS.

ALTERNATE NO. 10:
PROVIDE TWO POLE LIGHTS AT NORTH SIDE OF BUILDING PER SHEET E-101, C-102 AND A-102.

ALTERNATE NO. 11:
PROVIDE CUSTOM PATTERN VINYL WINDOW FILM AS INDICATED ON SHEET A-801.

REFERENCING LEGEND

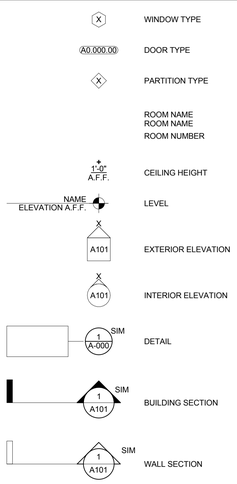

MATERIAL LEGEND

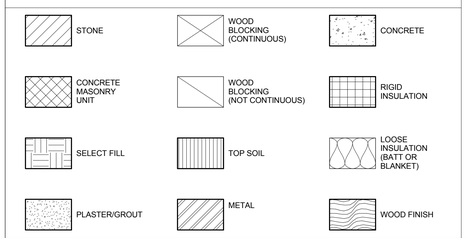

ABBREVIATIONS

@	AT	INV	INVERT
A/C	AIR CONDITIONING	JAN	JANITOR
ABV	ABOVE	JT	JOINT
ACOUS	ACOUSTIC(AL)	LAM	LAMINATED
AD	AREA DRAIN	LAV	LAVATORY
AFF	ABOVE FINISH FLOOR	LP	LOW POINT
ALT	ALTERNATE	MAX	MAXIMUM
ALUM	ALUMINUM	MB	MARKER BOARD
ANOD	ANODIZED	MECH	MECHANICAL
AP	ACCESS PANEL	MFGR	MANUFACTURE(R)
APPROX	APPROXIMATE	MIN	MINIMUM
AVC	AUDIO VISUAL CONSOLE	MIR	MIRROR
BD	BOARD	MISC	MISCELANEOUS
BLDG	BUILDING	ML	MODULE LINE/METHAL LATH
BLKG	BLOCKING	MO	MASONRY OPENING
BM	BEAM	MOD	MODULE/MODULAR
BRG	BEARING	MONO	MONOLITHIC
BRJ	BRICK RELIEF JOINT	MP	MASONRY PARTITION
BRZ	BRONZE	MT	METAL THRESHOLD
BYO	BY OWNER	MTL	METAL
CAB	CABINET	MWP	MEMBRANE WATERPROOFING
CB	CATCH BASIN	NIC	NOT IN CONTRACT
CEM	CEMENT	NTS	NOT TO SCALE
CER	CERAMIC	O/	ON TO OF, OVER
CHBD	CHALKBOARD	OC	ON CENTER
CJ	CONTROL JOINT	OD	OUTSIDE DIAMETER
CL	CENTER LINE	OPNG	OPENING
CLG	CEILING	OPP	OPPOSITE
CLO	CLOSET	OV	OVERHEAD
CMU	CONCRET MASONRY UNIT	PL	PLATE
CO	CASED OPENING	PLAM	PLASTIC LAMINATE
COL	COLUMN	PLAS	PLASTER
CONC	CONCRETE	PLYWD	PLAYWOOD
CONT	CONTINUOUS	PS	PROJECTION SCREEN
CONTR	CONCTRACT(OR)	PTD	PAINTED
CPT	CARPET	PTN	PARTITION
CT	CARPET TILE	R	RISER
DET	DEATIL	R/A	RETURN AIR
DF	DRYWALL FURRING	RD	ROOF DRAIN
DIA	DIAMETER	RE, REF	REFERENCE
DIM	DIMENSION	REINF	REINFORCE(MENT)
DN	DOWN	REQ'D	REQUIRED
DP	DRYWALL PARTITION	RM	ROOM
DR	DOOR	RTU	ROOFTOP UNIT
DS	DOWNSPOUT	SCHED	SCHEDULE(D)
DWG	DRAWING	SF	SAND FINISH
EA	EACH	SHLVS	SHELVES
EAV	ELECTRICAL-AUDIO/VISUAL	SHT	SHEET
EDF	ELECTRIC DRINKING FOUNTAIN	SIM	SIMILAR
EJ	EXPANSION JOINT	SK	SINK
EL	ELEVATION	SM	SMOOTH
ELEC	ELECTRICAL	SPEC	SPECIFICATIONS/SPECIFIED
ELEV	ELEVATOR OR ELEVATION	SQ	SQUARE
EP	ELECTRICAL PANEL	SS	SERVICE SINK
EQ	EQUAL	ST STL	STAINLESS STEEL
EQUIP	EQUIPMENT	STD	STANDARD
EXIST	EXISTING	STL	STEEL
EXP	EXPANSION	STOR	STORAGE
EXT	EXTERIOR	STRUCT	STRUCTURE/STRUCTURAL
FD	FLOOR DRAIN	SUSP	SUSPENDED
FEC	FIRE EXTINGUISHER CABINET	T	TREAD
FHC	FIRE HOSE CABINET	TA	TOILET ACCESSORY
FIN	FINISH(ED)	TB	TACKBOARD
FL	FLOOR	TC	TOP OF CURB
FM	FLOOR MAT	TEMP	TEMPERED
FR	FRAME	THK	THICK
FTVM	FUTURE TV MONITOR	TKBD	TACKBOARD
FURR	FURRED	TRANS	TRANSPARENT
FV	FIELD VERIFY	TVM	TV MONITOR
GA	GAGE/GAUGE	TVP	TV PROJECTOR
GALV	GALVANIZED	TYP	TYPICAL
GC	GENERAL CONTRACTOR	U	URINAL
GL	GLASS	U.N.O.	UNLESS NOTED OTHERWISE
GR	GROUND ROD ACCESS BOX	UNFIN	UNFINISHED
GST	GALZED CERAMIC TILE	UV	UNDERFLOOR VENT
GWB	GYPSUM WALL BOARD	VC	VALVE CABINET
GYP	GYPSUM	VERT	VERTICAL
HC	HANDICAP	VIN	VINYL
HDW	HARDWARE	VP	VISION PANEL
HM	HOLLOW METAL	W/	WITH
HORIZ	HORIZONTAL	W/O	WITHOUT
HP	HIGH POINT	WC	WATER CLOSET
HT	HEIGHT	WD	WOOD
ID	INSIDE DIMENSION	WDW	WINDOW
INSUL	INSULATION	WOOJ	WORK OUT ON JOB
INT	INTERIOR	WP	WATERPROOFING
		WWF	WELDED WIRE FABRIC

GROSS FLOOR AREAS

GROSS FLOOR AREAS

LEVEL 1 - 13,524 GSF
LEVEL 2 - 13,128 GSF

TOTAL - 26,652 GSF

STATE MAP

CITY MAP

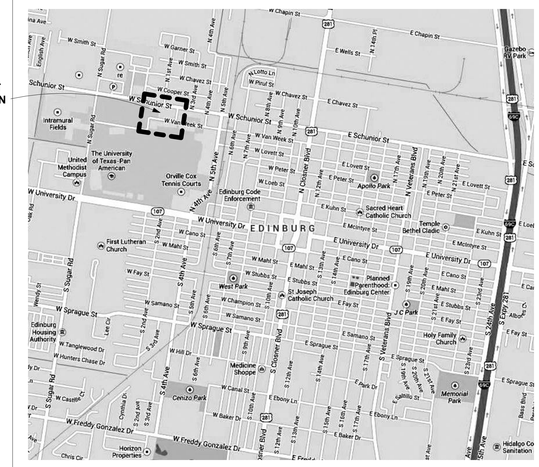

CAMPUS MAP

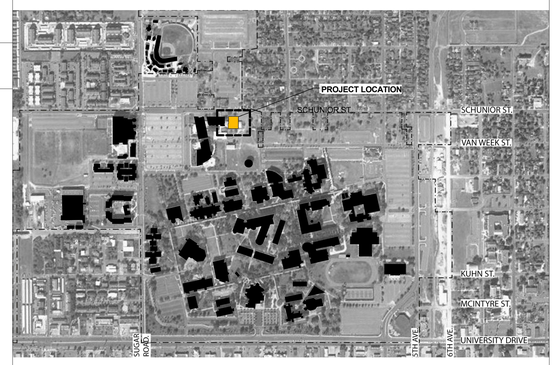

SHEET INDEX

GENERAL
G-001 GENERAL INFORMATION
G-101 ACCESSIBILITY GUIDELINES
G-102 ACCESSIBILITY GUIDELINES

LIFE SAFETY
LS-101 CODE SUMMARY SHEET
LS-201 LIFE SAFETY PLAN – LEVEL 1
LS-202 LIFE SAFETY PLAN – LEVEL 2

CIVIL
C100 OVERALL SITE PLAN
C101 DEMOLITION PLAN
C102 DIMENSIONAL CONTROL PLAN
C103 GRADING AND DRAINAGE PLAN
C104 STORM SEWER PROFILES
C105 WATER/WASTE WATER PLAN
C106 SITE AND LAYDOWN AREA
C107 EROSION AND SEDIMENT CONTROL PLAN
C108 MATERIAL RECEIVING AND STORAGE AREA SITE PLAN
C109 EROSION AND SEDIMENT CONTROL PLAN
C110 TYPICAL DETAILS
C111 TYPICAL DETAILS
C112 TYPICAL DETAILS
C113 TYPICAL DETAILS
C114 TYPICAL DETAILS
C115 TYPICAL DETAILS

LANDSCAPE
L1.00 TREE SURVEY/ RELOCATION PLAN
L1.01 IRRIGATION PLAN
L1.02 IRRIGATION DETAILS
L2.01 LANDSCAPE PLAN BASE BID
L2.02 LANDSCAPE PLAN ALTERNATES
L3.01 LANDSCAPE SCHEDULE AND DETAILS

ARCHITECTURAL
A-101 OVERALL SITE PLAN
A-102 SITE PLAN
A-103 ENLARGED SITE PLANS AND SITE DETAILS
A-104 SITE DETAILS AND SITE ALTERNATES
A-105 SITE DETAILS
A-201 LEVEL ONE FLOOR PLAN
A-202 LEVEL TWO FLOOR PLAN
A-203 ROOF LEVEL FLOOR PLAN
A-204 ENLARGED RESTROOM PLANS AND INTERIOR ELEVATIONS
A-205 ENLARGED PLANS AND INTERIOR ELEVATIONS - ELECTRICAL AND DATA COORDINATION
A-206 ENLARGED PLANS AND INTERIOR ELEVATIONS - ELECTRICAL AND DATA COORDINATION
A-301 LEVEL ONE REFLECTED CEILING PLAN
A-302 LEVEL TWO REFLECTED CEILING PLAN
A-401 FINISH SCHEDULES
A-402 DOOR SCHEDULES
A-403 WINDOW TYPES
A-404 DOOR AND WINDOW DETAILS
A-405 DOOR AND WINDOW DETAILS
A-406 DOOR AND WINDOW DETAILS
A-407 DOOR AND WINDOW DETAILS INTERIOR
A-408 PLAN DETAILS
A-410 SIGNAGE DETAILS
A-411 SIGNAGE PLANS
A-412 SIGNAGE SCHEDULE
A-501 EXTERIOR ELEVATIONS
A-502 EXTERIOR BUILDING PERSPECTIVES
A-601 BUILDING SECTIONS
A-602 WALL SECTIONS
A-603 WALL SECTIONS
A-604 WALL DETAILS
A-701 ENLARGED STAIR PLANS AND SECTIONS - STAIR 1
A-702 ENLARGED STAIR PLANS AND SECTIONS - STAIR 2
A-703 ENLARGED ELEVATOR PLANS AND SECTIONS
A-704 STAIR/RAIL DETAILS
A-801 INTERIOR ELEVATIONS
A-802 INTERIOR ELEVATIONS
A-803 INTERIOR ELEVATIONS
A-804 INTERIOR ELEVATIONS
A-901 FLOOR PATTERN PLANS

STRUCTURAL
S-001 STRUCTURAL NOTES
S-002 STRUCTURAL NOTES
S-003 ABBREVIATIONS & SYMBOLS LEGEND
S-004 SPECIAL INSPECTIONS
S-005 LIVE LOAD & WIND LOAD PLANS
S-100 PIER LEVEL FRAMING PLAN
S-201 FOUNDATION LEVEL FRAMING PLAN
S-202 SECOND LEVEL FRAMING PLAN
S-203 ROOF LEVEL FRAMING PLAN
S-301 EXTERIOR ELEVATIONS
S-401 CONCRETE TYPICAL DETAILS
S-402 CONCRETE TYPICAL DETAILS
S-403 CONCRETE SECTIONS AND DETAILS
S-404 CONCRETE SECTIONS AND DETAILS
S-405 BASE PLATES
S-501 TYPICAL STEEL DETAILS
S-502 TYPICAL STEEL DETAILS
S-503 TYPICAL STEEL DETAILS
S-504 TYPICAL STEEL DETAILS
S-505 STEEL SECTIONS & DETAILS
S-601 TYPICAL CONCRETE MASONRY DETAILS
S-701 CONCRETE BEAM SCHEDULE
S-801 BRACE SECTIONS & DETAILS

MECHANICAL
M-001 MECHANICAL GENERAL LEGEND
M-201 MECHANICAL HVAC PLAN LEVEL 1
M-202 MECHANICAL HVAC PLAN LEVEL 2
M-203 MECHANICAL HVAC - MECHANICAL ROOM ENLARGEMENTS & SECTIONS
M-204 MECHANICAL HVAC - MECHANICAL ROOM - HYDRONIC
M-205 MECHANICAL HVAC PLAN - ROOF PLAN
M-301 MECHANICAL DETAILS I
M-302 MECHANICAL DETAILS II
M-303 MECHANICAL DETAILS III
M-304 MECHANICAL DETAILS IV
M-401 MECHANICAL CONTROL AND FLOW DIAGRAMS
M-402 MECHANICAL CONTROL AND FLOW DIAGRAM
M-403 MECHANICAL CONTROL INPUT/OUTPUT
M-501 MECHANICAL SCHEDULES I
M-502 MECHANICAL SCHEDULES II

ELECTRICAL
E-001 ELECTRICAL GENERAL LEGEND
E-101 ELECTRICAL SITE PLAN
E-102 ELECTRICAL LIGHTNING PROTECTION SITE PLAN
E-201 ELECTRICAL LIGHTING PLAN LEVEL 1
E-202 ELECTRICAL LIGHTING PLAN LEVEL 2
E-203 ELECTRICAL POWER PLAN LEVEL 1
E-204 ELECTRICAL POWER PLAN LEVEL 2 & ROOF
E-205 MECHANICAL & PLUMBING EQUIPMENT POWER PLAN LEVEL 1
E-206 MECHANICAL & PLUMBING EQUIPMENT POWER PLAN LEVEL 2
E-207 FIRE ALARM PLAN LEVEL 1
E-208 FIRE ALARM PLAN LEVEL 2
E-301 ELECTRICAL DETAILS I
E-302 ELECTRICAL DETAILS II
E-303 ELECTRICAL DETAILS III
E-304 ELECTRICAL DETAILS IV
E-401 ELECTRICAL ONE-LINE DIAGRAM & SCHEDULES
E-402 ELECTRICAL SCHEDULES I
E-403 ELECTRICAL SCHEDULES II
E-404 ELECTRICAL SCHEDULES III

PLUMBING
P-001 PLUMBING GENERAL LEGEND
P-100 PLUMBING SITE PLAN
P-101 PLUMBING UNDERFLOOR PLAN
P-202 PLUMBING PLAN LEVEL 1
P-203 PLUMBING PLAN LEVEL 2
P-204 PLUMBING ROOF PLAN
P-205 PLUMBING ENLARGED PLANS
P-301 PLUMBING RISERS SCHEMATIC DIAGRAMS
P-302 PLUMBING RISERS SCHEMATIC DIAGRAMS
P-303 PLUMBING RISERS SCHEMATIC DIAGRAMS
P-304 PLUMBING DETAILS
P-305 PLUMBING DETAILS
P-401 PLUMBING SCHEDULES

FIRE PROTECTION
FP-101 AUTOMATIC SPRINKLER SYSTEM PERFORMANCE SPECIFICATIONS NOTES
FP-102 CONCEPTUAL FIRE PROTECTION PLAN LEVEL 1 AND LEVEL 2

TECHNOLOGY
T-000 TECHNOLOGY LEGEND AND ABBREVIATIONS
T-101 TECHNOLOGY SITE PLAN
T-102 TECHNOLOGY SITE PLAN
T-201 TECHNOLOGY LEVEL ONE - FLOOR PLAN
T-202 TECHNOLOGY LEVEL TWO - FLOOR PLAN
T-300 TECHNOLOGY ROOM LAYOUTS AND RACK ELEVATIONS
T-400 TECHNOLOGY TYPICAL DETAILS
T-401 TECHNOLOGY TYPICAL DETAILS
T-500 TECHNOLOGY TYPICAL DETAILS & LABELING SCHEME

SECURITY
TS-000 SECURITY SYMBOLS, LEGEND AND ABBREVIATIONS
TS-101 SECURITY SITE PLAN
TS-201 SECURITY LEVEL ONE - FLOOR PLAN
TS-202 SECURITY LEVEL TWO - FLOOR PLAN
TS-203 SECURITY ROOF LEVEL - FLOOR PLAN
TS-400 SECURITY TYPICAL DETAILS
TS-401 SECURITY TYPICAL DETAILS AND SCHEDULES

muñoz & company
1017 NORTH MAIN SUITE 300
SAN ANTONIO, TEXAS 78212
O. 210.349.1163 F. 210.525.1038
WWW.MUNOZ-CO.COM

REGISTERED ARCHITECT JACOB EDWARDS 18803 STATE OF TEXAS

UTRGV
The University of Texas Rio Grande Valley

UNIVERSITY OF TEXAS RIO GRANDE VALLEY
SCHOOL OF MEDICINE
TEAM BASED LEARNING CENTER
PROJECT NO: 903-1159
EDINBURG, TX
100% CONSTRUCTION DOCUMENTS

Issue/Revision

#	DESCRIPTION	DATE

Sheet Title
GENERAL INFORMATION

Date
NOVEMBER 08, 2018

Project Number	Drawn By	Checked By
A17021.00	RL	CC

Sheet Number
G-001

CHAPTER 3: BUILDING BLOCKS

302 Floor or Ground Surfaces

302.2 Carpet. Carpet or carpet tile shall be securely attached and shall have a firm cushion, pad, or backing or no cushion or pad. Carpet or carpet tile shall have a level loop, textured loop, level cut pile, or level cut/uncut pile texture. Pile height shall be 1/2 inch (13 mm) maximum. Exposed edges of carpet shall be fastened to floor surfaces and shall have trim on the entire length of the exposed exposed edge. Carpet edge trim shall comply with 303.

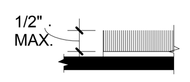

Figure 302.2 Carpet Pile Height

302.3 Openings. Openings in floor or ground surfaces shall not allow passage of a sphere more than 1/2 inch (13 mm) diameter except as allowed in 407.4.3, 409.4.3, 410.4, 810.5.3 and 810.10. Elongated openings shall be placed so that the long dimension is perpendicular to the dominant direction of travel.

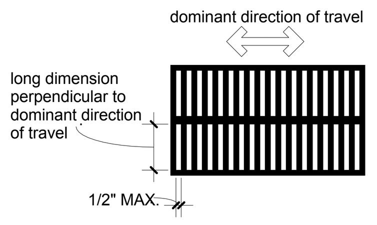

Figure 302.3 Elongated Openings in Floor or Ground Surface

303.2 Vertical. Changes in level of 1/4 inch (6.4 mm) high maximum shall be permitted to be vertical.

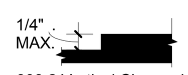

Figure 303.2 Vertical Change in Level

303.3 Beveled. Changes in level between 1/4 inch (6.4 mm) high minimum and 1/2 inch (13 mm) high maximum shall be beveled with a slope not steeper than 1:2.

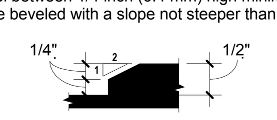

Figure 303.3 Beveled Change in Level

304 Turning Space 304.3.1 Circular Space. The turning space shall be a space of 60 inches (1525 mm) diameter minimum. The space shall be permitted to include knee and toe clearance complying with 306.

304.3.2 T-Shaped Space. The turning space shall be a T-shaped space within a 60 inch (1525 mm) square minimum with arms and base 36 inches (915 mm) wide minimum. Each arm of the T shall be clear of obstructions 12 inches (305 mm) minimum in each direction and the base shall be clear of obstructions 24 inches (610 mm) minimum. The space shall be permitted to include knee and toe clearance complying with 306 only at the end of either the base or one arm.

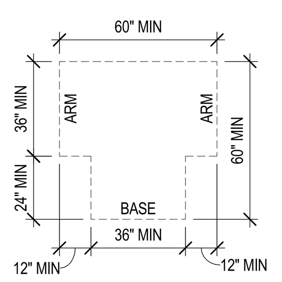

Figure 304.3.2 T-Shaped Turning Space

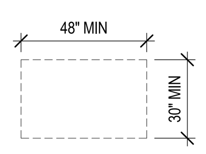

Figure 305.3 Clear Floor or Ground Space

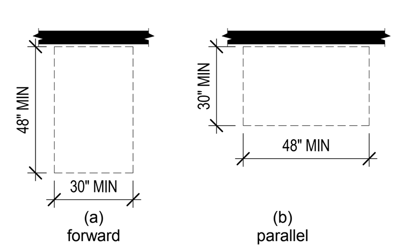

Figure 305.5 Position of Clear Floor or Ground Space

305.7.1 Forward Approach. Alcoves shall be 36 inches (915 mm)wide minimum where the depth exceeds 24 inches (610 mm).

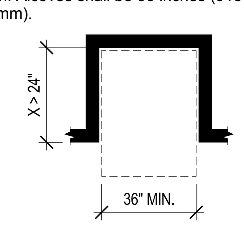

Figure 305.7.1 Maneuvering Clearnce in an Alcove, Forward Approach

305.7.2 Parallel Approach. Alcoves shall be 60 inches (1525 mm) wide minimum where the depth exceeds 15 inches (380 mm).

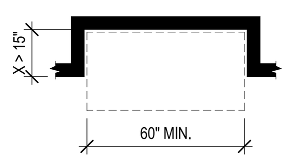

Figure 305.7.2 Maneuvering Clearnce in an Alcove, Parallel Approach

306 Knee and Toe Clearance

306.2 Toe Clearance.

306.2.1 General. Space under an element between the finish floor or ground and 9 inches (230 mm) above the finish floor or ground shall be considered toe clearance and shall comply with 306.2.

306.2.2 Maximum Depth. Toe clearance shall extend 25 inches (635 mm) maximum under an element.

306.2.3 Minimum Required Depth. Where toe clearance is required at an element as part of a clear floor space, the toe clearance shall extend 17 inches (430 mm) minimum under the element.

306.2.4 Additional Clearance. Space extending greater than 6 inches (150 mm) beyond the available knee clearance at 9 inches (230 mm) above the finish floor or ground shall not be considered toe clearance.

306.2.5 Width. Toe clearance shall be 30 inches (760 mm) wide minimum.

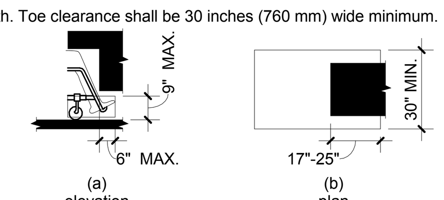

Figure 306.2 Toe Clearance

306.3 Knee Clearance.

306.3.1 General. Space under an element between 9 inches (230 mm) and 27 inches (685 mm) above the finish floor or ground shall be considered knee clearance and shall comply with 306.3.

306.3.2 Maximum Depth. Knee clearance shall extend 25 inches (635 mm) maximum under an element at 9 inches (230 mm) above the finish floor or ground.

306.3.3 Minimum Required Depth. Where knee clearance is required under an element as part of a clear floor space, the knee clearance shall be 11 inches (280 mm) deep minimum at 9 inches (230 mm) above the finish floor or ground, and 8 inches (205 mm) deep minimum at 27 inches (685 mm) above the finish floor or ground.

306.3.4 Clearance Reduction. Between 9 inches (230 mm) and 27 inches (685 mm) above the finish floor or ground, the knee clearance shall be permitted to reduce at a rate of 1 inch (25 mm) in depth for each 6 inches (150 mm) in height.

306.3.5 Width. Knee clearance shall be 30 inches (760 mm) wide minimum.

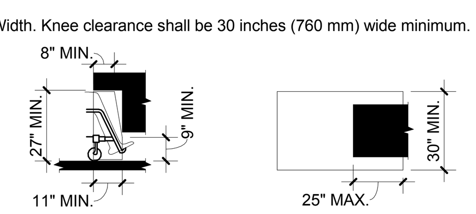

Figure 306.3 Knee Clearance

307 Protruding Objects

307.2 Protrusion Limits. Objects with leading edges more than 27 inches (685 mm) and not more than 80 inches (2030 mm) above the finish floor or ground shall protrude 4 inches (100 mm) maximum horizontally into the circulation path.

EXCEPTION: Handrails shall be permitted to protrude 4 1/2 inches (115 mm) maximum.

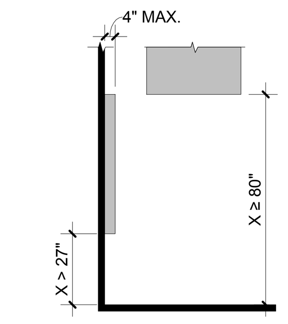

Figure 307.2 Limits of Protruding Objects

307.3 Post-Mounted Objects. Free-standing objects mounted on posts or pylons shall overhang circulation paths 12 inches (305 mm) maximum when located 27 inches (685 mm) minimum and 80 inches (2030 mm) maximum above the finish floor or ground. Where a sign or other obstruction is mounted between posts or pylons and the clear distance between the posts or pylons is greater than 12 inches (305 mm), the lowest edge of such sign or obstruction shall be 27 inches (685 mm) maximum or 80 inches (2030 mm) minimum above the finish floor or ground.

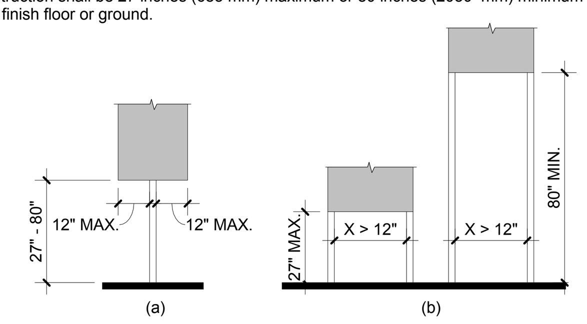

Figure 307.3 Post-Mounted Protruding Objects

307.4 Vertical Clearance. Vertical clearance shall be 80 inches (2030 mm) high minimum. Guardrails or other barriers shall be provided where the vertical clearance is less than 80 inches (2030 mm) high. The leading edge of such guardrail or barrier shall be located 27 inches (685 mm) maximum above the finish floor or ground.

EXCEPTION: Door closers and door stops shall be permitted to be 78 inches (1980 mm) minimum above the finish floor or ground.

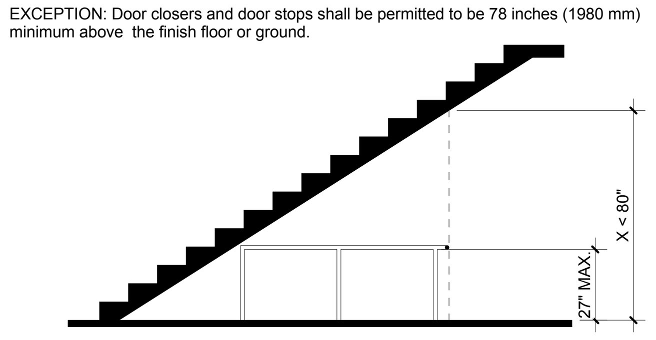

Figure 307.4 Vertical Clearance

308 Reach Ranges

Children's Reach Ranges

Forward or Side Reach	High (maximum)	Low (minimum)
Ages 3 and 4	36 in.	20 in.
Ages 5 through 8	40 in.	18 in.
Ages 9 through 12	44 in.	16 in.

308.2 Forward Reach.

308.2.1 Unobstructed. Where a forward reach is unobstructed, the high forward reach shall be 48 inches (1220 mm) maximum and the low forward reach shall be 15 inches (380 mm) minimum above the finish floor or ground.

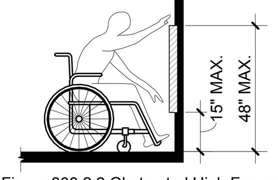

Figure 308.2.2 Obstructed High Forward Reach

308.2.2 Obstructed High Reach. Where a high forward reach is over an obstruction, the clear floor space shall extend beneath the element for a distance not less than the required reach depth over the obstruction. The high forward reach shall be 48 inches (1220 mm) maximum where the reach depth is 20 inches (510 mm) maximum. Where the reach depth exceeds 20 inches (510 mm), the high forward reach shall be 44 inches (1120 mm) maximum and the reach depth shall be 25 inches (635 mm) maximum.

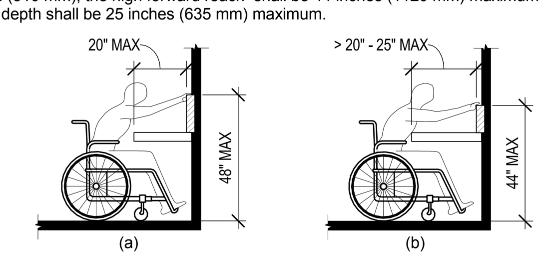

Figure 308.2.2 Obstructed High Forward Reach

308.3 Side Reach.

308.3.1 Unobstructed. Where a clear floor or ground space allows a parallel approach to an element and the side reach is unobstructed, the high side reach shall be 48 inches (1220 mm) maximum and the low side reach shall be 15 inches (380 mm) minimum above the finish floor or ground.

Exceptions:
1. An obstruction shall be permitted between theclar floor orground space and the element where the depth of the obstruction is 10" maximum.

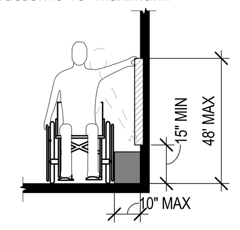

Figure 308.3.1 Unobstructed Side Reach

308.3.2 Obstructed High Reach. Where a clear floor or ground space allows a parallel approach to an element and the high side reach is over an obstruction, the height of the obstruction shall be 34 inches (865 mm) maximum and the depth of the obstruction shall be 24 inches (610 mm) maximum. The high side reach shall be 48 inches (1220 mm) maximum for a reach depth of 10 inches (255 mm) maximum. Where the reach depth exceeds 10 inches (255 mm), the high side reach shall be 46 inches (1170 mm) maximum for a reach depth of 24 inches (610 mm) maximum.

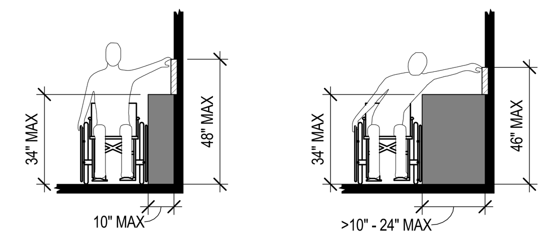

Figure 308.3.2 Obstructed High Side Reach

309 Operable Parts

309.2 Clear Floor Space. A clear floor or ground space complying with 305 shall be provided.

309.3 Height. Operable parts shall be placed within one or more of the reach ranges specified in 308.

309.4 Operation. Operable parts shall be operable with one hand and shall not require tight grasping, pinching, or twisting of the wrist. The force required to activate operable parts shall be 5 pounds (22.2 N) maximum.

CHAPTER 4: ACCESSIBLE ROUTES

402.2 Components. Accessible routes shall consist of one or more of the following components: walking surfaces with a running slope not steeper than 1:20, doorways, ramps, curb ramps excluding the flared sides, elevators, and platform lifts. All components of an accessible route shall comply with the applicable requirements of Chapter 4.

Advisory 402.2 Components. Walking surfaces must have running slopes not steeper than 1:20, see 403.3. Other components of accessible routes, such as ramps (405) and curb ramps (406), are permitted to be more steeply sloped.

403 Walking Surfaces
403.1 General. Walking surfaces that are a part of an accessible route shall comply with 403.

403.2 Floor or Ground Surface. Floor or ground surfaces shall comply with 302.

403.3 Slope. The running slope of walking surfaces shall not be steeper than 1:20. The cross slope of walking surfaces shall not be steeper than 1:48.

403.4 Changes in Level. Changes in level shall comply with 303.

403.5 Clearances. Walking surfaces shall provide clearances complying with 403.5.

EXCEPTION: Within employee work areas, clearances on common use circulation paths shall be permitted to be decreased by work area equipment provided that the decrease is essential to the function of the work being performed.

403.5.1 Clear Width. Except as provided in 403.5.2 and 403.5.3, the clear width of walking surfaces shall be 36 inches (915 mm) minimum.

EXCEPTION: The clear width shall be permitted to be reduced to 32 inches (815 mm) minimum for a length of 24 inches (610 mm) maximum provided that reduced width segments are separated by segments that are 48 inches (1220 mm) long minimum and 36 inches (915 mm) wide minimum.

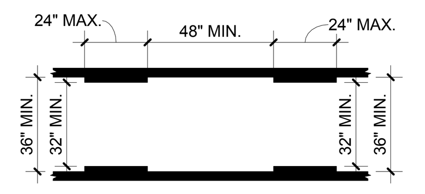

Figure 403.5.1 Clear Width of an Accessible Route

403.5.2 Clear Width at Turn. Where the accessible route makes a 180 degree turn around an element which is less than 48 inches (1220 mm) wide, clear width shall be 42 inches (1065 mm) minimum approaching the turn, 48 inches (1220 mm) minimum at the turn and 42 inches (1065 mm) minimum leaving the turn.

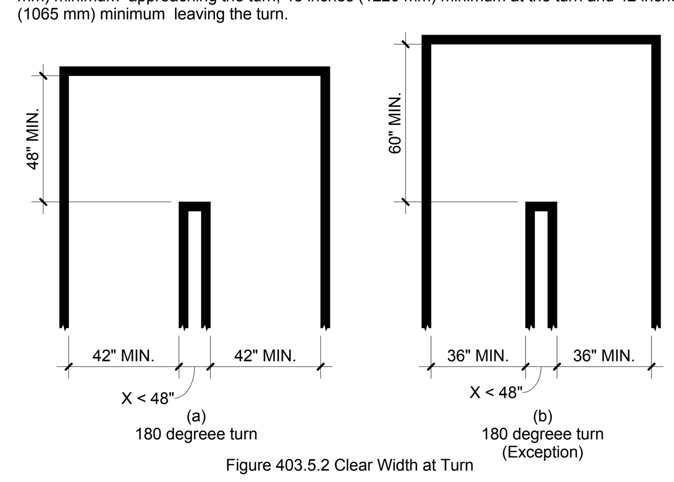

Figure 403.5.2 Clear Width at Turn

403.5.3 Passing Spaces. An accessible route with a clear width less than 60 inches (1525 mm) shall provide passing spaces at intervals of 200 feet (61 m) maximum.

404 Doors, Doorways, and Gates

404.2.3 Clear Width. Door openings shall provide a clear width of 32 inches (815 mm) minimum. Clear openings of doorways with swinging doors shall be measured between the face of the door and the stop, with the door open 90 degrees. Openings more than 24 inches (610 mm) deep shall provide a clear opening of 36 inches (915 mm) minimum. There shall be no projections into the required clear opening width lower than 34 inches (865 mm) above the finish floor or ground. Projections into the clear opening width between 34 inches (865 mm) and 80 inches (2030 mm) above the finish floor or ground shall not exceed 4 inches (100 mm).

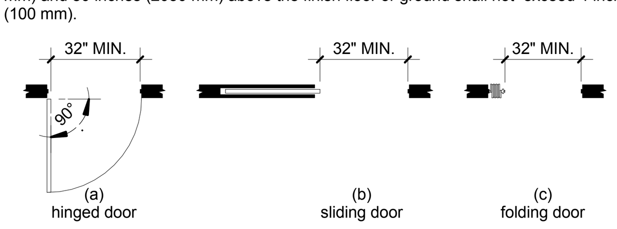

Figure 404.2.3 Clear Width of Doorways

404.2.4 Maneuvering Clearances. Minimum maneuvering clearances at doors and gates shall comply with 404.2.4. Maneuvering clearances shall extend the full width of the doorway and the required latch side or hinge side clearance.

404.2.4.3 Recessed Doors and Gates. Maneuvering clearances for forward approach shall be provided when any obstruction within 18 inches (455 mm) of the latch side of a doorway projects more than 8 inches (205 mm) beyond the face of the door, measured perpendicular to the face of the door or gate.

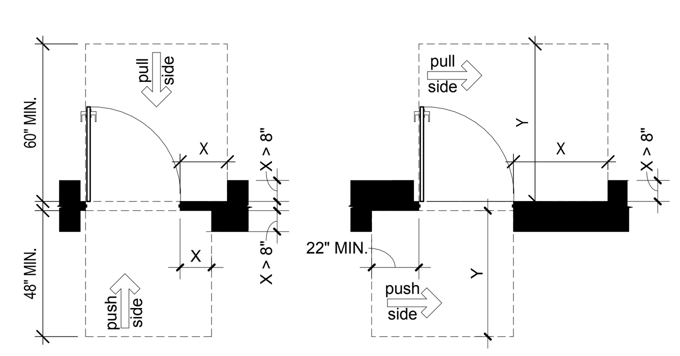

Front Approach - Swinging Doors

Pull Side Approaches
X = 18" MIN.

Push Side Approaches
X = 12" MIN. if door has both a closer and a latch

Side Approach - Swinging Doors Hinge Side

Pull Side Approaches
X = 36" MIN. if Y = 60" or
X = 42" MIN. if Y = 54"

Push Side Approaches
Y = 42" MIN.
If door has both a closer and a latch use 48"

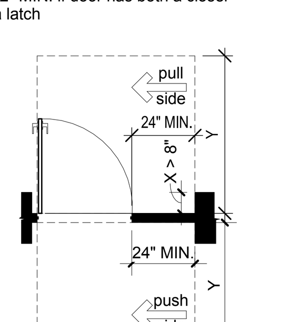

Side Approach - Swinging Doors Latch Side

Pull Side Approaches
Y = 48"
If door has a closer use 54"

Push Side Approaches
Y = 42" MIN.
If door has both a closer use 48"

404.2.6 Doors in Series and Gates in Series. The distance between two hinged or pivoted doors in series and gates in series shall be 48 inches (1220 mm) minimum plus the width of doors or gates swinging into the space.

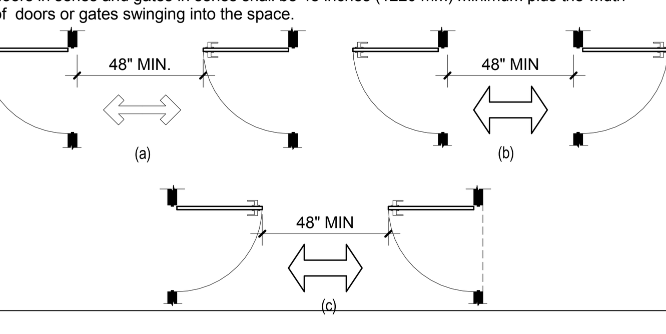

404.2.7 Door and Gate Hardware. Handles, pulls, latches, locks, and other operable parts on doors and gates shall comply with 309.4. Operable parts of such hardware shall be 34 inches (865 mm) minimum and 48 inches (1220 mm) maximum above the finish floor or ground. Where sliding doors are in the fully open position, operating hardware shall be exposed and usable from both sides.

404.2.8.1 Door Closers and Gate Closers. Door closers and gate closers shall be adjusted so that from an open position of 90 degrees, the time required to move the door to a position of 12 degrees from the latch is 5 seconds minimum.

404.2.8.2 Spring Hinges. Door and gate spring hinges shall be adjusted so that from the open position of 70 degrees, the door or gate shall move to the closed position in 1.5 seconds minimum.

404.2.9 Door and Gate Opening Force. Fire doors shall have a minimum opening force allowable by the appropriate administrative authority. The force for pushing or pulling open a door or gate other than fire doors shall be as follows:

1. Interior hinged doors and gates: 5 pounds (22.2 N) maximum.

2. Sliding or folding doors: 5 pounds (22.2 N) maximum.

These forces do not apply to the force required to retract latch bolts or disengage other devices that hold the door or gate in a closed position.

404.2.10 Door and Gate Surfaces. Swinging door and gate surfaces within 10 inches (255 mm) of the finish floor or ground measured vertically shall have a smooth surface on the push side extending the full width of the door or gate. Parts creating horizontal or vertical joints in these surfaces shall be within 1/16 inch (1.6 mm) of the same plane as the other. Cavities created by added kick plates shall be capped.

404.2.11 Vision Lights. Doors, gates, and side lights adjacent to doors or gates, containing one or more glazing panels that permit viewing through the panels shall have the bottom of at least one glazed panel located 43 inches (1090 mm) maximum above the finish floor.
404.3 Automatic and Power-Assisted Doors and Gates. Automatic doors and automatic gates shall comply with

404.3. Full-powered automatic doors shall comply with ANSI/BHMA A156.10 (incorporated by reference, see "Referenced Standards" in Chapter 1). Low-energy and power-assisted doors shall comply with ANSI/BHMA A156.19 (1997 or 2002 edition) (incorporated by reference, see "Referenced Standards" in Chapter 1).

404.3.2 Maneuvering Clearance. Clearances at power-assisted doors and gates shall comply with 404.2.4. Clearances at automatic doors and gates without standby power and serving an accessible means of egress shall comply with 404.2.4.

404.3.7 Revolving Doors, Revolving Gates, and Turnstiles. Revolving doors, revolving gates, and turnstiles shall not be part of an accessible route.

405 Ramps
405.2 Slope. Ramp runs shall have a running slope not steeper than 1:12.

405.3 Cross Slope. Cross slope of ramp runs shall not be steeper than 1:48.

405.5 Clear Width. The clear width of a ramp run and, where handrails are provided, the clear width between handrails shall be 36 inches (915 mm) minimum.

405.6 Rise. The rise for any ramp run shall be 30 inches (760 mm) maximum.

405.7 Landings. Ramps shall have landings at the top and the bottom of each ramp run. Landings shall comply with 405.7.

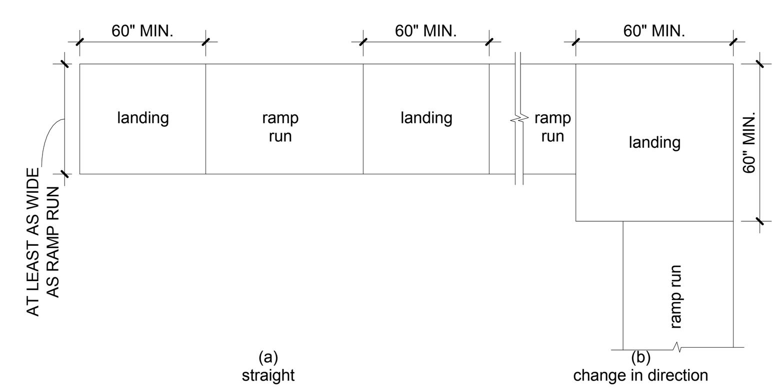

Figure 405.7 Ramp Landings

405.7.1 Slope. Landings shall have slope no steeper than 1:48. Changes in level are not permitted.

405.7.2 Width. The landing clear width shall be at least as wide as the widest ramp run leading to the landing.

405.7.3 Length. The landing clear length shall be 60 inches (1525 mm) long minimum.

405.7.4 Change in Direction. Ramps that change direction between runs at landings shall have a clear landing 60 inches (1525 mm) minimum by 60 inches (1525 mm) minimum.

405.7.5 Doorways. Where doorways are located adjacent to a ramp landing, maneuvering clearances required by 404.2.4 and 404.3.2 shall be permitted to overlap the required landing

405.8 Handrails. Ramp runs with a rise greater than 6 inches (150 mm) shall have handrails complying with 505.

405.9 Edge Protection. Edge protection complying with 405.9.1 or 405.9.2 shall be provided on each side of ramp runs and at each side of ramp landings.

405.9.1 Extended Floor or Ground Surface. The floor or ground surface of the ramp run or landing shall extend 12 inches (305 mm) minimum beyond the inside face of a handrail complying with 505.

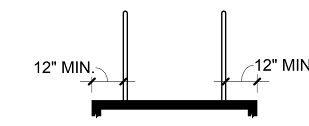

Figure 405.9.1 Extended Floor or Ground Surface Edge Protection

405.9.2 Curb or Barrier. A curb or barrier shall be provided that prevents the passage of a 4 inch (100 mm) diameter sphere, where any portion of the sphere is within 4 inches (100 mm) of the finish floor or ground surface.

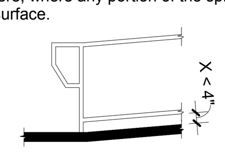

Figure 405.9.2 Curb or Barrier Edge Protection

406 Curb Ramps
406.1 General. Curb ramps on accessible routes shall comply with 406, 405.2 through 405.5, and 405.10.

406.2 Counter Slope. Counter slopes of adjoining gutters and road surfaces immediately adjacent to the curb ramp shall not be steeper than 1:20. The adjacent surfaces at transitions at curb ramps to walks, gutters, and streets shall be at the same level.

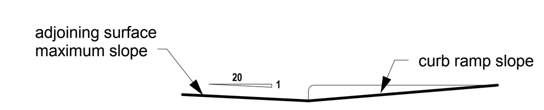

Figure 406.2 Counter Slope of Surfaces Adjacent to Curb Ramps

406.3 Sides of Curb Ramps. Where provided, curb ramp flares shall not be steeper than 1:10.

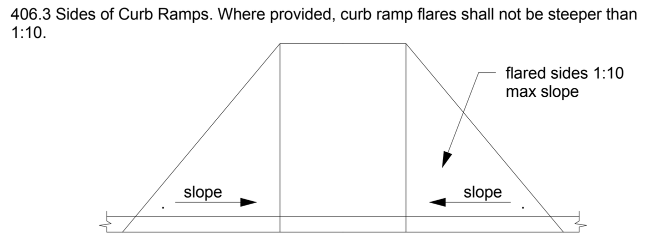

Figure 406.3 Sides of Curb Ramps

406.4 Landings. Landings shall be provided at the tops of curb ramps. The landing clear length shall be 36 inches (915 mm) minimum. The landing clear width shall be at least as wide as the curb ramp, excluding flared sides, leading to the landing.

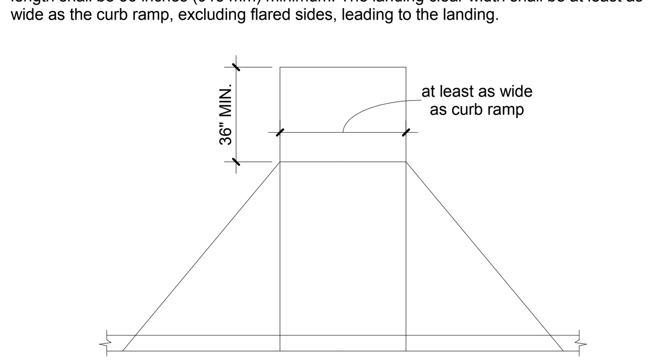

Figure 406.4 Landings at the Top of Curb Ramps

406.5 Location. Curb ramps and the flared sides of curb ramps shall be located so that they do not project into vehicular traffic lanes, parking spaces, or parking access aisles. Curb ramps at marked crossings shall be wholly contained within the markings, excluding any flared sides.

406.6 Diagonal Curb Ramps. Diagonal or corner type curb ramps with returned curbs or other well-defined edges shall have the edges parallel to the direction of pedestrian flow. The bottom of diagonal curb ramps shall have a clear space 48 inches (1220 mm) minimum outside active traffic lanes of the roadway. Diagonal curb ramps provided at marked crossings shall provide the 48 inches (1220 mm) minimum clear space within the markings. Diagonal curb ramps with flared sides shall have a segment of curb 24 inches (610 mm) long minimum located on each side of the curb ramp and within the marked crossing.

406.7 Islands. Raised islands in crossings shall be cut through level with the street or have curb ramps at both sides. Each curb ramp shall have a level area 48 inches (1220 mm) long minimum by 36 inches (915 mm) wide minimum at the top of the curb ramp in the part of the island intersected by the crossings. Each 48 inch (1220 mm) minimum by 36 inch (915 mm) minimum area shall be oriented so that the 48 inch (1220 mm) minimum length is in the direction of the running slope of the curb ramp it serves. The 48 inch (1220 mm) minimum by 36 inch (915 mm) minimum areas and the accessible route shall be permitted to overlap.

407 Elevators
407.1 General. Elevators shall comply with 407 and with ASME A17.1 (incorporated by reference, see "Referenced Standards" in Chapter 1). They shall be passenger elevators as classified by ASME A17.1. Elevator operation shall be automatic. EXCEPTION: Existing conditions don't have to comply

407.2.1.2 Size. Call buttons shall be 3/4 inch (19 mm) minimum in the smallest dimension.

407.2.2.1 Visible and Audible Signals. A visible and audible signal shall be provided at each hoistway entrance to indicate which car is answering a call and the car's direction of travel. Where in-car signals are provided, they shall be visible from the floor area adjacent to the hall call buttons.

407.2.2.2 Visible Signals. Visible signal fixtures shall be centered at 72 inches (1830 mm) minimum above the finish floor or ground. The visible signal elements shall be 2 1/2 inches (64 mm) minimum measured along the vertical centerline of the element. Signals shall be visible from the floor area adjacent to the hall call button.

407.2.3.1 Floor Designation. Floor designations complying with 703.2 and 703.4.1 shall be provided on both jambs of elevator hoistway entrances. Floor designations shall be provided in both tactile characters and braille. Tactile characters shall be 2 inches (51 mm) high minimum. A tactile star shall be provided on both jambs at the main entry level.

407.2.3.2 Car Designations. Destination-oriented elevators shall provide tactile car identification complying with 703.2 on both jambs of the hoistway immediately below the floor designation. Car designations shall be provided in both tactile characters and braille. Tactile characters shall be 2 inches (51 mm) high minimum.

407.3.3.1 Height. The device shall be activated by sensing an obstruction passing through the opening at 5 inches (125 mm) nominal and 29 inches (735 mm) nominal above the finish floor.

407.3.3.3 Duration. Door reopening devices shall remain effective for 20 seconds minimum.

407.3.4 Door and Signal Timing. The minimum acceptable time from notification that a car is answering a call or notification of the car assigned at the means for the entry of destination information until the doors of that car start to close shall be calculated from the following equation:

T = D/(1.5 ft/s) or T = D/(455 mm/s) = 5 seconds minimum where T equals the total time in seconds and D equals the distance (in feet or millimeters) from the point in the lobby or corridor 60 inches (1525 mm) directly in front of the farthest call button controlling that car to the centerline of its hoistway door.

407.3.5 Door Delay. Elevator doors shall remain fully open in response to a car call for 3 seconds

407.3.6 Width. The width of elevator doors shall comply with Table 407.4.1.

407.4 Elevator Car Requirements. Elevator cars shall comply with 407.4.

407.4.1 Car Dimensions. Inside dimensions of elevator cars and clear width of elevator doors shall comply with Table 407.4.1.

407.4.3 Platform to Hoistway Clearance. The clearance between the car platform sill and the edge of any hoistway landing shall be 1 1/4 inch (32 mm) maximum.

407.4.4 Leveling. Each car shall be equipped with a self-leveling feature that will automatically bring and maintain the car at floor landings within a tolerance of 1/2 inch (13 mm) under rated loading to zero loading conditions.

407.4.5 Illumination. The level of illumination at the car controls, platform, car threshold and car landing sill shall be 5 foot candles (54 lux) minimum.

407.4.6 Elevator Car Controls. Where provided, elevator car controls shall comply with 407.4.6 and 309.4.

407.4.6.1 Location. Controls shall be located within one of the reach ranges specified in 308.

407.4.6.2 Buttons. Car control buttons with floor designations shall comply with 407.4.6.2 and shall be raised or flush.

407.4.6.2.1 Size. Buttons shall be 3/4 inch (19 mm) minimum in their smallest dimension.

407.4.6.4.1 Height. Emergency control buttons shall have their centerlines 35 inches (890 mm) minimum above the finish floor.

407.4.7.1.1 Type. Control buttons shall be identified by tactile characters complying with 703.2.

407.4.7.1.3 Symbols. The control button for the emergency stop, alarm, door open, door close, main entry floor, and phone, shall be identified with tactile symbols as shown in Table 407.4.7.1.3.

407.4.8.1.1 Size. Characters shall be 1/2 inch (13 mm) high minimum.

407.4.8.2.2 Signal Level. The verbal annunciator shall be 10 dB minimum above ambient, but shall not exceed 80 dB, measured at the annunciator.

407.4.8.2.3 Frequency. The verbal annunciator shall have a frequency of 300 Hz minimum to 3000 Hz maximum.

CHAPTER 5: GENERAL SITE & BUILDING ELEMENTS

501 General
501.1 Scope. The provisions of Chapter 5 shall apply where required by Chapter 2 or where referenced by a requirement in this document.

502 Parking Spaces

502.1 General. Car and van parking spaces shall comply with 502. Where parking spaces are marked with lines, width measurements of parking spaces and access aisles shall be made from the centerline of the markings.

EXCEPTION: Where parking spaces or access aisles are not adjacent to another parking space or access aisle, measurements shall be permitted to include the full width of the line defining the parking space or access aisle.

502.2 Vehicle Spaces. Car parking spaces shall be 96 inches (2440 mm) wide minimum and van parking spaces shall be 132 inches (3350 mm) wide minimum, shall be marked to define the width, and shall have an adjacent access aisle complying with 502.3.

EXCEPTION: Van parking spaces shall be permitted to be 96 inches (2440 mm) wide minimum where the access aisle is 96 inches (2440 mm) wide minimum.

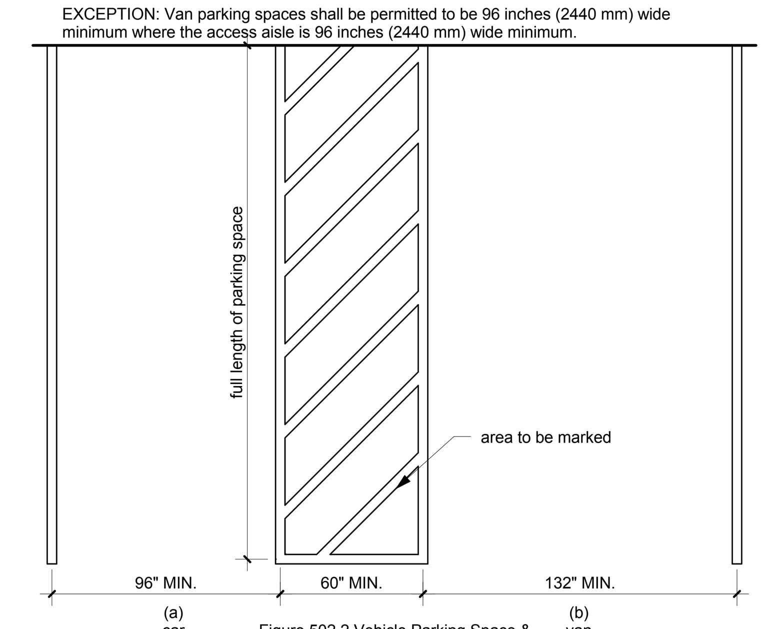

Figure 502.2 Vehicle Parking Space & 502.3 Parking Space Access Aisle

502.3 Access Aisle. Access aisles serving parking spaces shall comply with 502.3. Access aisles shall adjoin an accessible route. Two parking spaces shall be permitted to share a common access aisle.

502.3.1 Width. Access aisles serving car and van parking spaces shall be 60 inches (1525 mm) wide minimum.

502.3.2 Length. Access aisles shall extend the full length of the parking spaces they serve.

502.3.3 Marking. Access aisles shall be marked so as to discourage parking in them.

502.3.4 Location. Access aisles shall not overlap the vehicular way. Access aisles shall be permitted to be placed on either side of the parking space except for angled van parking spaces which shall have access aisles located on the passenger side of the parking spaces.

502.4 Floor or Ground Surfaces. Parking spaces and access aisles serving them shall comply with 302. Access aisles shall be at the same level as the parking spaces they serve. Changes in level are not permitted. EXCEPTION: Slopes not steeper than 1:48 shall be permitted.

502.5 Vertical Clearance. Parking spaces for vans and access aisles and vehicular routes serving them shall provide a vertical clearance of 98 inches (2490 mm) minimum.

502.6 Identification. Parking space identification signs shall include the International Symbol of Accessibility complying with 703.7.2.1. Signs identifying van parking spaces shall contain the designation "van accessible." Signs shall be 60 inches (1525 mm) minimum above the finish floor or ground surface measured to the bottom of the sign.

502.7 Relationship to Accessible Routes. Parking spaces and access aisles shall be designed so that cars and vans, when parked, cannot obstruct the required clear width of adjacent accessible routes.

503.3 Passenger Loading Zones

503.2 Vehicle Pull-Up Space. Passenger loading zones shall provide a vehicular pull-up space 96 inches (2440 mm) wide minimum and 20 feet (6100 mm) long minimum.

503.3 Access Aisle. Passenger loading zones shall provide access aisles complying with 503 adjacent to the vehicle pull-up space. Access aisles shall adjoin an accessible route and shall not overlap the vehicular way.

503.3.1 Width. Access aisles serving vehicle pull-up spaces shall be 60 inches (1525 mm) wide minimum.

503.3.2 Length. Access aisles shall extend the full length of the vehicle pull-up spaces they serve.

503.3.3 Marking. Access aisles shall be marked so as to discourage parking in them.

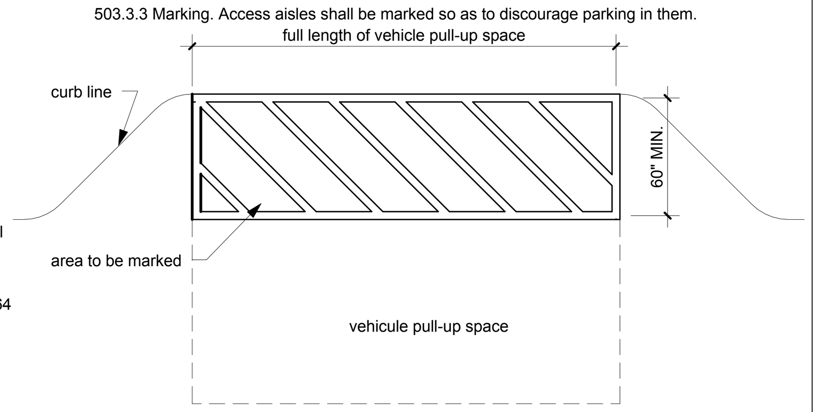

Figure 503.3 Passenger Loading Zone Access Aisle

503.4 Floor and Ground Surfaces. Vehicle pull-up spaces and access aisles serving them shall comply with 302. Access aisles shall be at the same level as the vehicle pull-up space they serve. Changes in level are not permitted. EXCEPTION: Slopes not steeper than 1:48 shall be permitted.

503.5 Vertical Clearance. Vehicle pull-up spaces, access aisles serving them, and a vehicular route from an entrance to the passenger loading zone, and from the passenger loading zone to a vehicular exit shall provide a vertical clearance of 114 inches (2895 mm) minimum.

504 Stairways
504.1 General. Stairs that are part of the means of egress is required to comply with 504

504.2 Treads and Risers. All steps on a flight of stairs shall have uniform riser heights and uniform tread depths. Risers shall be 4 inches (100 mm) high minimum and 7 inches (180 mm) high maximum. Treads shall be 11 inches (280 mm) deep minimum.

504.3 Open Risers. Open risers are not permitted.

504.4 Tread Surface. Stair treads shall comply with 302. Changes in level are not permitted.

504.5 Nosings. The radius of curvature at the leading edge of the tread shall be 1/2 inch (13 mm) maximum. Nosings that project beyond risers shall have the underside of the leading edge curved or beveled. Risers shall be permitted to slope under the tread at an angle of 30 degrees maximum from vertical. The permitted projection of the nosing shall extend 1 1/2 inches (38 mm) maximum over the tread below.

504.6 Handrails. Stairs shall have handrails complying with 505.

504.7 Wet Conditions. Stair treads and landings subject to wet conditions shall be designed to prevent the accumulation of water.

505 Handrails
505.1 General. Handrails provided along walking surfaces complying with 403, required at ramps complying with 405, and required at stairs complying with 504 shall comply with 505.

Advisory 505.1 General. Handrails are required on ramp runs with a rise greater than 6 inches (150 mm) (see 405.8) and on certain stairways (see 504). Handrails are not required on walking surfaces with running slopes less than 1:20. However, handrails are required to comply with 505 when they are provided on walking surfaces with running slopes less than 1:20 (see 403.6). Sections 505.2, 505.3, and 505.10 do not apply to handrails provided on walking surfaces with running slopes less than 1:20 as these sections only reference requirements for ramps and stairs.

505.2 Where Required. Handrails shall be provided on both sides of stairs and ramps.

505.3 Continuity. Handrails shall be continuous within the full length of each stair flight or ramp run. Inside handrails on switchback or dogleg stairs and ramps shall be continuous between flights or runs.

505.4 Height. Top of gripping surfaces of handrails shall be 34 inches (865 mm) minimum and 38 inches (965 mm) maximum vertically above walking surfaces, stair nosings, and ramp surfaces. Handrails shall be at a consistent height above walking surfaces, stair nosings, and ramp surfaces.

505.5 Clearance. Clearance between handrail gripping surfaces and adjacent surfaces shall be 1 1/2 inches (38 mm) minimum.

505.6 Gripping Surface. Handrail gripping surfaces shall be continuous along their length and shall not be obstructed along their tops or sides. The bottoms of handrail gripping surfaces shall not be obstructed for more than 20 percent of their length. Where provided, horizontal projections shall occur 1 1/2 inches (38 mm) minimum below the bottom of the handrail gripping surface.

505.7.1 Circular Cross Section. Handrail gripping surfaces with a circular cross section shall have an outside diameter of 1 1/4 inches (32 mm) minimum and 2 inches (51 mm) maximum.

505.7.2 Non-Circular Cross Sections. Handrail gripping surfaces with a non-circular cross section shall have a perimeter dimension of 4 inches (100 mm) minimum and 6 1/4 inches (160 mm) maximum, and a cross-section dimension of 2 1/4 inches (57 mm) maximum.

505.8 Surfaces. Handrail gripping surfaces and any surfaces adjacent to them shall be free of sharp or abrasive elements and shall have rounded edges.

505.9 Fittings. Handrails shall not rotate within their fittings.

505.10 Handrail Extensions. Handrail gripping surfaces shall extend beyond and in the same direction of stair flights and ramp runs in accordance with 505.10.

505.10.1 Top and Bottom Extension at Ramps. Ramp handrails shall extend horizontally above the landing for 12 inches (305 mm) minimum beyond the top and bottom of ramp runs. Extensions shall return to a wall, guard, or the landing surface, or shall be continuous to the handrail of an adjacent ramp run.

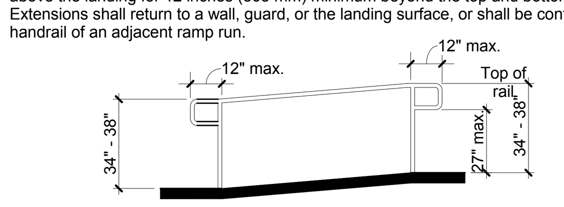

Figure 505.10.1 Top and Bottom handrail Extension at Ramps

505.10.2 Top Extension at Stairs. At the top of a stair flight, handrails shall extend horizontally above the landing for 12 inches (305 mm) minimum beginning directly above the first riser nosing. Extensions shall return to a wall, guard, or the landing surface, or shall be continuous to the handrail of an adjacent stair flight.

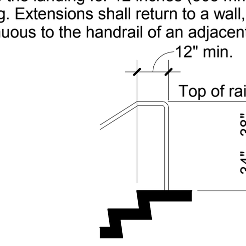

Figure 505.10.2 Top Handrail Extension at Stairs

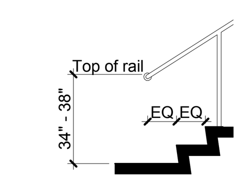

Figure 505.10.3 Bottom Handrail Extension at Stairs

505.10.3 Bottom Extension at Stairs. At the bottom of a stair flight, handrails shall extend at the slope of the stair flight for a horizontal distance at least equal to one tread depth beyond the last riser nosing. Extension shall return to a wall, guard, or the landing surface, or shall be continuous to the handrail of an adjacent stair flight.

CHAPTER 6: PLUMBING ELEMENTS AND FACILITIES

602 Drinking Fountains

602.2 Clear Floor Space. Units shall have a clear floor or ground space complying with 305 positioned for a forward approach and centered on the unit. Knee and toe clearance complying with 306 shall be provided.
EXCEPTION: A parallel approach complying with 305 shall be permitted at units for children's use where the spout is 30 inches (760 mm) maximum above the finish floor or ground and is 3 1/2 inches (90 mm) maximum from the front edge of the unit, including bumpers.

602.3 Operable Parts. Operable parts shall comply with 309.

602.4 Spout Height. Spout outlets shall be 36 inches (915 mm) maximum above the finish floor or ground.

602.5 Spout Location. The spout shall be located 15 inches (380 mm) minimum from the vertical support and 5 inches (125 mm) maximum from the front edge of the unit, including bumpers.

602.6 Water Flow. The spout shall provide a flow of water 4 inches (100 mm) high minimum and shall be located 5 inches (125 mm) maximum from the front of the unit. The angle of the water stream shall be measured horizontally relative to the front face of the unit. Where spouts are located less than 3 inches (75 mm) of the front of the unit, the angle of the water stream shall be 30 degrees maximum. Where spouts are located between 3 inches (75 mm) and 5 inches (125 mm) maximum from the front of the unit, the angle of the water stream shall be 15 degrees maximum.

602.7 Drinking Fountains for Standing Persons. Spout outlets of drinking fountains for standing persons shall be 38 inches (965 mm) minimum and 43 inches (1090 mm) maximum above the finish floor or ground.

muñoz & company
1017 NORTH MAIN SUITE 300
SAN ANTONIO, TEXAS 78212
O. 210.349.1163 F. 210.525.1038
WWW.MUNOZ-CO.COM

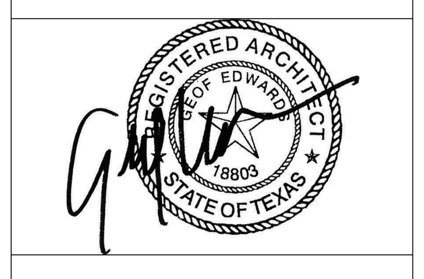

UTRGV
The University of Texas Rio Grande Valley

UNIVERSITY OF TEXAS RIO GRANDE VALLEY
SCHOOL OF MEDICINE
TEAM BASED LEARNING CENTER
PROJECT NO: 903-1159
EDINBURG, TX
100% CONSTRUCTION DOCUMENTS

Issue/Revision

#	DESCRIPTION	DATE

Sheet Title
ACCESSIBILITY GUIDELINES

Date
NOVEMBER 08, 2018

Project Number	Drawn By	Checked By
A17021.00	RL	CC

Sheet Number
G-101

603 Toilet and Bathing Rooms
603.2 Clearances. Clearances shall comply with 603.2.

603.2.1 Turning Space. Turning space complying with 304 shall be provided within the room.

603.2.2 Overlap. Required clear floor spaces, clearance at fixtures, and turning space shall be permitted to overlap.

603.2.3 Door Swing. Doors shall not swing into the clear floor space or clearance required for any fixture. Doors shall be permitted to swing into the required turning space.

603.3 Mirrors. Mirrors located above lavatories or countertops shall be installed with the bottom edge of the reflecting surface 40 inches (1015 mm) maximum above the finish floor or ground. Mirrors not located above lavatories or countertops shall be installed with the bottom edge of the reflecting surface 35 inches (890 mm) maximum above the finish floor or ground.

603.4 Coat Hooks and Shelves. Coat hooks shall be located within one of the reach ranges specified in 308. Shelves shall be located 40 inches (1015 mm) minimum and 48 inches (1220 mm) maximum above the finish floor.

604 Water Closets and Toilet Compartments
604.2 Location. The water closet shall be positioned with a wall or partition to the rear and to one side. The centerline of the water closet shall be 16 inches (405 mm) minimum to 18 inches (455 mm) maximum from the side wall or partition, except that the water closet shall be 17 inches (430 mm) minimum and 19 inches (485 mm) maximum from the side wall or partition in the ambulatory accessible toilet compartment specified in 604.8.2. Water closets shall be arranged for a left-hand or right-hand approach.

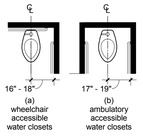

604.3.1 Size. Clearance around a water closet shall be 60 inches (1525 mm) minimum measured perpendicular from the side wall and 56 inches (1420 mm) minimum measured perpendicular from the rear wall.

Figure 604.3.1 Size of Clearance at Water Closets

604.3.2 Overlap. The required clearance around the water closet shall be permitted to overlap the water closet, associated grab bars, dispensers, sanitary napkin disposal units, coat hooks, shelves, accessible routes, clear floor space and clearances required at other fixtures, and the turning space. No other fixtures or obstructions shall be located within the required water closet clearance.

604.4 Seats. The seat height of a water closet above the finish floor shall be 17 inches (430 mm) minimum and 19 inches (485 mm) maximum measured to the top of the seat. Seats shall not be sprung to return to a lifted position.

604.5 Grab Bars. Grab bars for water closets shall comply with 609. Grab bars shall be provided on the side wall closest to the water closet and on the rear wall.

604.5.1 Side Wall. The side wall grab bar shall be 42 inches (1065 mm) long minimum, located 12 inches (305 mm) maximum from the rear wall and extending 54 inches (1370 mm) minimum from the rear wall.

Figure 604.5.1
Side Wall Grab Bar at Water Closet

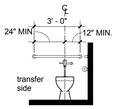

Figure 604.5.2
Rear Wall Grab Bar at Water Closet

604.5.2 Rear Wall. The rear wall grab bar shall be 36 inches (915 mm) long minimum and extend from the centerline of the water closet 12 inches (305 mm) minimum on one side and 24 inches (610 mm) minimum on the other side.

604.6 Flush Controls. Flush controls shall be hand operated or automatic. Hand operated flush controls shall comply with 309. Flush controls shall be located on the open side of the water closet except in ambulatory accessible compartments complying with 604.8.2.

604.7 Dispensers. Toilet paper dispensers shall comply with 309.4 and shall be 7 inches (180 mm) minimum and 9 inches (230 mm) maximum in front of the water closet measured to the centerline of the dispenser. The outlet of the dispenser shall be 15 inches (380 mm) minimum and 48 inches (1220 mm) maximum above the finish floor and shall not be located behind grab bars. Dispensers shall not be of a type that controls delivery or that does not allow continuous paper flow.

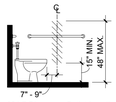

Figure 604.7 Dispenser Outlet Location

604.8 Toilet Compartments. Wheelchair accessible toilet compartments shall meet the requirements of 604.8.1 and 604.8.3. Compartments containing more than one plumbing fixture shall comply with 603. Ambulatory accessible compartments shall comply with 604.8.2 and 604.8.3.

604.8.1 Wheelchair Accessible Compartments. Wheelchair accessible compartments shall comply with 604.8.1.

604.8.1.1 Size. Wheelchair accessible compartments shall be 60 inches (1525 mm) wide minimum measured perpendicular to the side wall, and 56 inches (1420 mm) deep minimum for wall hung water closets and 59 inches (1500 mm) deep minimum for floor mounted water closets measured perpendicular to the rear wall. Wheelchair accessible compartments for children's use shall be 60 inches (1525 mm) wide minimum measured perpendicular to the side wall, and 59 inches (1500 mm) deep minimum for wall hung and floor mounted water closets measured perpendicular to the rear wall.

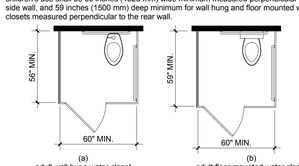

Figure 604.8.1.1 Size of Wheelchair Accessible Toilet Compartment

604.8.1.2 Doors. Toilet compartment doors, including door hardware, shall comply with 404 except that if the approach is to the latch side of the compartment door, clearance between the door side of the compartment and any obstruction shall be 42 inches (1065 mm) minimum. Doors shall be located in the front partition or in the side wall or partition farthest from the water closet. Where located in the front partition, the door opening shall be 4 inches (100 mm) maximum from the side wall or partition farthest from the water closet. Where located in the side wall or partition, the door opening shall be 4 inches (100 mm) maximum from the front partition. The door shall be self-closing. A door pull complying with 404.2.7 shall be placed on both sides of the door near the latch. Toilet compartment doors shall not swing into the minimum required compartment area.

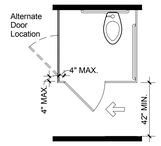

Figure 604.8.1.2 Wheelchair Accessible Toilet Compartment Doors

604.8.1.3 Approach. Compartments shall be arranged for left-hand or right-hand approach to the water closet.

604.8.1.4 Toe Clearance. The front partition and at least one side partition shall provide a toe clearance of 9 inches (230 mm) minimum above the finish floor and 6 inches (150 mm) deep minimum beyond the compartment-side face of the partition, exclusive of partition support members. Compartments for children's use shall provide a toe clearance of 12 inches (305 mm) minimum above the finish floor.

EXCEPTION: Toe clearance at the front partition is not required in a compartment greater than 62 inches (1575 mm) deep with a wall-hung water closet or 65 inches (1650 mm) deep with a floor-mounted water closet. Toe clearance at the side partition is not required in a compartment greater than 66 inches (1675 mm) wide. Toe clearance at the front partition is not required in a compartment for children's use that is greater than 65 inches (1650 mm) deep

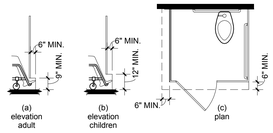

Figure 604.8.1.4 Wheelchair Accessible Toilet Compartment Toe Clearance

604.8.1.5 Grab Bars. Grab bars shall comply with 609. A side-wall grab bar complying with 604.5.1 shall be provided and shall be located on the wall closest to the water closet. In addition, a rear-wall grab bar complying with 604.5.2 shall be provided.

604.8.2 Ambulatory Accessible Compartments. Ambulatory accessible compartments shall comply with 604.8.2.

604.8.2.1 Size. Ambulatory accessible compartments shall have a depth of 60 inches (1525 mm) minimum and a width of 35 inches (890 mm) minimum and 37 inches (940 mm) maximum.

604.8.2.2 Doors. Toilet compartment doors, including door hardware, shall comply with 404, except that if the approach is to the latch side of the compartment door, clearance between the door side of the compartment and any obstruction shall be 42 inches (1065 mm) minimum. The door shall be self-closing. A door pull complying with 404.2.7 shall be placed on both sides of the door near the latch. Toilet compartment doors shall not swing into the minimum required compartment area.

604.8.2.3 Grab Bars. Grab bars shall comply with 609. A side-wall grab bar complying with 604.5.1 shall be provided on both sides of the compartment.

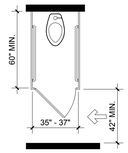

Figure 604.8.2 Ambulatory Accessible Toilet Compartment

604.8.3 Coat Hooks and Shelves. Coat hooks shall be located within one of the reach ranges specified in 308. Shelves shall be located 40 inches (1015 mm) minimum and 48 inches (1220 mm) maximum above the finish floor.

604.9 Water Closets and Toilet Compartments for Children's Use. Water closets and toilet compartments for children's use shall comply with 604.9.

604.9.1 Location. The water closet shall be located with a wall or partition to the rear and to one side. The centerline of the water closet shall be 12 inches (305 mm) minimum and 18 inches (455 mm) maximum from the side wall or partition, except that the water closet shall be 17 inches (430 mm) minimum and 19 inches (485 mm) maximum from the side wall or partition in the ambulatory accessible toilet compartment specified in 604.8.2. Compartments shall be arranged for left-hand or right-hand approach to the water closet.

604.9.2 Clearance. Clearance around a water closet shall comply with 604.3.

604.9.3 Height. The height of water closets shall be 11 inches (280 mm) minimum and 17 inches (430 mm) maximum measured to the top of the seat. Seats shall not be sprung to return to a lifted position.

604.9.4 Grab Bars. Grab bars for water closets shall comply with 604.5.

604.9.5 Flush Controls. Flush controls shall be hand operated or automatic. Hand operated flush controls shall comply with 309.2 and 309.4 and shall be installed 36 inches (915 mm) maximum above the finish floor. Flush controls shall be located on the open side of the water closet except in ambulatory accessible compartments complying with 604.8.2.

604.9.6 Dispensers. Toilet paper dispensers shall comply with 309.4 and shall be 7 inches (180 mm) minimum and 9 inches (230 mm) maximum in front of the water closet measured to the centerline of the dispenser. The outlet of the dispenser shall be 14 inches (355 mm) minimum and 19 inches (485 mm) maximum above the finish floor. There shall be a clearance of 1 1/2 inches (38 mm) minimum below the grab bar. Dispensers shall not be of a type that controls delivery or that does not allow continuous paper flow. 604.9.7 Toilet Compartments. Toilet compartments shall comply with 604.8.

605 Urinals
605.2 Height and Depth. Urinals shall be the stall-type or the wall-hung type with the rim 17 inches (430 mm) maximum above the finish floor or ground. Urinals shall be 13 1/2 inches (345 mm) deep minimum measured from the outer face of the urinal rim to the back of the fixture.

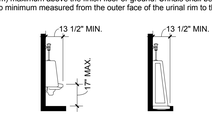

Figure 605.2 Height and Depth of Urinals

605.3 Clear Floor Space. A clear floor or ground space complying with 305 positioned for forward approach shall be provided.

605.4 Flush Controls. Flush controls shall be hand operated or automatic. Hand operated flush controls shall comply with 309.

606 Lavatories and Sinks
606.2 Clear Floor Space. A clear floor space complying with 305, positioned for a forward approach, and knee and toe clearance complying with 306 shall be provided.

606.3 Height. Lavatories and sinks shall be installed with the front of the higher of the rim or counter surface 34 inches (865 mm) maximum above the finish floor or ground.

606.4 Faucets. Controls for faucets shall comply with 309. Hand-operated metering faucets shall remain open for 10 seconds minimum.

606.5 Exposed Pipes and Surfaces. Water supply and drain pipes under lavatories and sinks shall be insulated or otherwise configured to protect against contact. There shall be no sharp or abrasive surfaces under lavatories and sinks.

608 Shower Compartments

608.2 Size and Clearances for Shower Compartments. Shower compartments shall have sizes and clearances complying with 608.2.

608.2.1 Transfer Type Shower Compartments. Transfer type shower compartments shall be 36 inches (915 mm) by 36 inches (915 mm) clear inside dimensions measured at the center points of opposing sides and shall have a 36 inch (915 mm) wide minimum entry on the face of the shower compartment. Clearance of 36 inches (915 mm) wide minimum by 48 inches (1220 mm) long minimum measured from the control wall shall be provided.

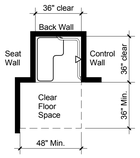

Note: inside finish dimensions measure at the center points of opposing sides

Figure 608.2.1 Transfer Type Shower Compartment Size and Clearance

608.2.2 Standard Roll-In Type Shower Compartments. Standard roll-in type shower compartments shall be 30 inches (760 mm) wide minimum by 60 inches (1525 mm) deep minimum clear inside dimensions measured at center points of opposing sides and shall have a 60 inches (1525 mm) wide minimum entry on the face of the shower compartment.

608.2.2.1 Clearance. A 30 inch (760 mm) wide minimum by 60 inch (1525 mm) long minimum clearance shall be provided adjacent to the open face of the shower compartment.

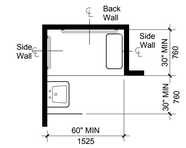

Note: inside finished dimentions measured at the center points of opposing sides

Figure 608.2.3 Alternate Roll-In Type Shower Compartment Size and Clearance

608.2.3 Alternate Roll-In Type Shower Compartments. Alternate roll-in type shower compartments shall be 36 inches (915 mm) wide and 60 inches (1525 mm) deep minimum clear inside dimensions measured at center points of opposing sides. A 36 inch (915 mm) wide minimum entry shall be provided at one end of the long side of the compartment.

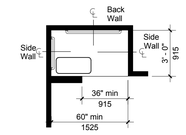

Note: inside finished dimentions measured at the center points of opposing sides

Figure 608.2.3 Alternate Roll-In Type Shower Compartment Size and Clearance

608.3 Grab Bars. Grab bars shall comply with 609 and shall be provided in accordance with 608.3. Where multiple grab bars are used, required horizontal grab bars shall be installed at the same height above the finish floor.

608.3.1 Transfer Type Shower Compartments. In transfer type compartments, grab bars shall be provided across the control wall and back wall to a point 18 inches (455 mm) from the control wall.

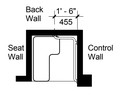

Figure 608.3.1 Grab Bars for Transfer Type Showers

608.3.2 Standard Roll-In Type Shower Compartments. Where a seat is provided in standard roll-in type shower compartments, grab bars shall be provided on the back wall and the side wall opposite the seat. Grab bars shall not be provided above the seat. Where a seat is not provided in standard roll-in type shower compartments, grab bars shall be provided on three walls. Grab bars shall be installed 6 inches (150 mm) maximum from adjacent walls.

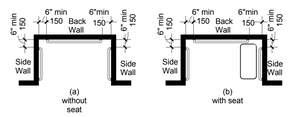

Figure 608.3.2 Grab Bars for Standard Roll-In Type Showers

608.3.3 Alternate Roll-In Type Shower Compartments. In alternate roll-in type shower compartments, grab bars shall be provided on the back wall and the side wall farthest from the compartment entry. Grab bars shall not be provided above the seat. Grab bars shall be installed 6 inches (150 mm) maximum from adjacent walls.

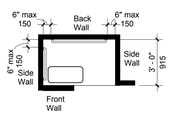

Figure 608.3.3 Grab Bars for Alternate Roll-In Type Showers

608.4 Seats. A folding or non-folding seat shall be provided in transfer type shower compartments. A folding seat shall be provided in roll-in type showers required in transient lodging guest rooms with mobility features complying with 806.2. Seats shall comply with 610. 608.5 Controls. Controls, faucets, and shower spray units shall comply with 309.4.

608.5.1 Transfer Type Shower Compartments. In transfer type shower compartments, the controls, faucets, and shower spray unit shall be installed on the side wall opposite the seat 38 inches (965 mm) minimum and 48 inches (1220 mm) maximum above the shower floor and shall be located on the control wall 15 inches (380 mm) maximum from the centerline of the seat toward the shower opening.

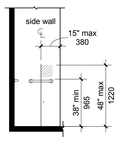

Figure 608.5.1 Transfer Type Shower Compartment Control Location

608.5.2 Standard Roll-In Type Shower Compartments. In standard roll-in type shower compartments, the controls, faucets, and shower spray unit shall be located above the grab bar, but no higher than 48 inches (1220 mm) above the shower floor. Where a seat is provided, the controls, faucets, and shower spray unit shall be installed on the back wall adjacent to the seat wall and shall be located 27 inches (685 mm) maximum from the seat wall.
608.5.2 Standard Roll-In Type Shower Compartments. In standard roll-in type shower compartments, the controls, faucets, and shower spray unit shall be located above the grab bar, but no higher than 48 inches (1220 mm) above the shower floor. Where a seat is provided, the controls, faucets, and shower spray unit shall be installed on the back wall adjacent to the seat wall and shall be located 27 inches (685 mm) maximum from the seat wall.

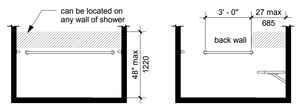

Figure 608.5.2 Standard Roll-In Type Shower Compartment Control Location

608.5.3 Alternate Roll-In Type Shower Compartments. In alternate roll-in type shower bar, but no higher than 48 inches (1220 mm) above the shower floor. Where a seat is provided, the controls, faucets, and shower spray unit shall be located on the side wall shower spray unit shall be installed on the side wall farthest from the compartment entry.

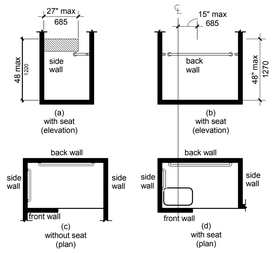

Figure 608.5.3 Alternate Roll-In Type Shower Compartment Control Location

608.6 Shower Spray Unit and Water. A shower spray unit with a hose 59 inches (1500 mm) long minimum that can be used both as a fixed-position shower head and as a hand-held shower shall be provided. The shower spray unit shall have an on/off control with a non-positive shut-off. If an adjustable-height shower head on a vertical bar is used, the bar shall be installed so as not to obstruct the use of grab bars. Shower spray units shall deliver water that is 120°F (49°C) maximum. 608.7 Thresholds. Thresholds in roll-in type shower compartments shall be 1/2 inch (13 mm) high maximum in accordance with 303. In transfer type shower compartments, thresholds 1/2 inch (13 mm) high maximum shall be beveled, rounded, or vertical.

608.8 Shower Enclosures. Enclosures for shower compartments shall not obstruct controls, faucets, and shower spray units or obstruct transfer from wheelchairs onto shower seats.

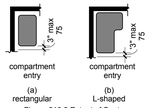

Figure 610.3 Extent of Seat

610.3 Shower Compartment Seats. Where a seat is provided in a standard roll-in shower compartment, it shall be a folding type, shall be installed on the side wall adjacent to the controls, and shall extend from the back wall to a point within 3 inches (75 mm) of the compartment entry. Where a seat is provided in an alternate roll-in type shower compartment, it shall be a folding type, shall be installed on the front wall opposite the back wall, and shall extend from the adjacent side wall to a point within 3 inches (75 mm) of the compartment entry. In transfer-type showers, the seat shall extend from the back wall to a point within 3 inches (75 mm) of the compartment entry. The top of the seat shall be 17 inches (430 mm) minimum and 19 inches (485 mm) maximum above the bathroom finish floor. Seats shall comply with 610.3.1 or 610.3.2.

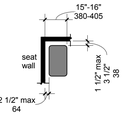

Figure 610.3.1 Rectangular Shower Seat

610.3.1 Rectangular Seats. The rear edge of a rectangular seat shall be 2 1/2 inches (64 mm) maximum and the front edge 15 inches (380 mm) minimum and 16 inches (405 mm) maximum from the seat wall. The side edge of the seat shall be 1 1/2 inches (38 mm) maximum from the adjacent wall.

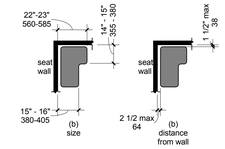

Figure 610.3.2 L-Shaped Shower Seat

610.3.2 L-Shaped Seats. The rear edge of an L-shaped seat shall be 2 1/2 inches (64 mm) maximum and the front edge 15 inches (380 mm) minimum and 16 inches (405 mm) maximum from the seat wall. The rear edge of the "L" portion of the seat shall be 1 1/2 inches (38 mm) maximum from the wall and the front edge shall be 14 inches (355 mm) minimum and 15 inches (380 mm) maximum from the wall. The end of the "L" shall be 22 inches (560 mm) minimum and 23 inches maximum (585 mm) from the main seat wall.

610.4 Structural Strength. Allowable stresses shall not be exceeded for materials used when a vertical or horizontal force of 250 pounds (1112 N) is applied at any point on the seat, fastener, mounting device, or supporting structure.

CHAPTER 7: COMMUNICATION ELEMENTS AND FEATURES 702 Fire Alarm Systems 702.1 General. Fire alarm systems shall have permanently installed audible and visible alarms complying with NFPA 72 (1999 or 2002 edition) (incorporated by reference, see "Referenced Standards" in Chapter 1), except that the maximum allowable sound level of audible notification appliances complying with section 4-3.2.1 of NFPA 72 (1999 edition) shall have a sound level no more than 110 dB at the minimum hearing distance from the audible appliance. In addition, alarms in guest rooms required to provide communication features shall comply with sections 4-3 and 4-4 of NFPA 72 (1999 edition) or sections 7.4 and 7.5 of NFPA 72 (2002 edition).

703 Signs

703.1 General.

Signs shall comply with 703. Where both visual and tactile characters are required, either one sign with both visual and tactile characters, or two separate signs, one with visual, and one with tactile characters, shall be provided.

703.2 Raised Characters. Raised characters shall comply with 703.2 and shall be duplicated in braille complying with 703.3. Raised characters shall be installed in accordance with 703.4. 703.2.1 Depth. Raised characters shall be 1/32 inch (0.8 mm) minimum above their background.

703.2.2 Case. Characters shall be uppercase.

703.2.3 Style. Characters shall be sans serif. Characters shall not be italic, oblique, script, highly decorative, or of other unusual forms.

703.2.4 Character Proportions. Characters shall be selected from fonts where the width of the uppercase letter "O" is 55 percent minimum and 110 percent maximum of the height of the uppercase letter "I". 703.2.5 Character Height. Character height measured vertically from the baseline of the character shall be 5/8 inch (16 mm) minimum and 2 inches (51 mm) maximum based on the height of the uppercase letter

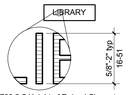

Figure 703.2.5 Height of Raised Characters

703.2.6 Stroke Thickness. Stroke thickness of the uppercase letter "I" shall be 15 percent maximum of the height of the character. 703.2.7 Character Spacing. Character spacing shall be measured between the two closest points of adjacent raised characters within a message, excluding word spaces. Where characters have rectangular cross sections, spacing between individual raised characters shall be 1/8 inch (3.2 mm) minimum and 4 times the raised character stroke width maximum. Where characters have other cross sections, spacing between individual raised characters shall be 1/16 inch (1.6 mm) minimum and 4 times the raised character stroke width maximum at the base of the cross sections, and 1/8 inch (3.2 mm) minimum and 4 times the raised character stroke width maximum at the top of the cross sections. Characters shall be separated from raised borders and decorative elements 3/8 inch (9.5 mm) minimum. 703.2.8 Line Spacing. Spacing between the baselines of separate lines of raised characters within a message shall be 135 percent minimum and 170 percent maximum of the raised character height. 703.3 Braille. Braille shall be contracted (Grade 2) and shall comply with 703.3 and 703.4. 703.3.1 Dimensions and Capitalization. Braille dots shall have a domed or rounded shape and shall comply with Table 703.3.1. The indication of an uppercase letter or letters shall only be used before the first word of sentences, proper nouns and names, individual letters of the alphabet, initials, and acronyms.

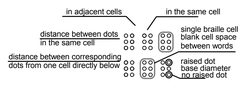

Figure 703.3.1 Braille Measurement

703.3.2 Position. Braille shall be positioned below the corresponding text. If text is multi-lined, braille shall be placed below the entire text. Braille shall be separated 3/8 inch (9.5 mm) minimum from any other tactile characters and 3/8 inch (9.5 mm) minimum from raised borders and decorative elements.

Figure 703.3.2 Position of Braille

703.3.2 Position. Braille shall be positioned below the corresponding text. If text is multi-lined, braille shall be placed below the entire text. Braille shall be separated 3/8 inch (9.5 mm) minimum from any other tactile characters and 3/8 inch (9.5 mm) minimum from raised borders and decorative elements.

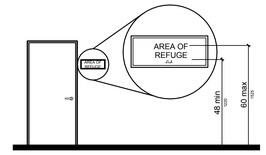

Figure 703.3.2 Position of Braille

703.4.2 Location. Where a tactile sign is provided at a door, the sign shall be located alongside the door at the latch side. Where a tactile sign is provided at double doors with one active leaf, the sign shall be located on the inactive leaf. Where a tactile sign is provided at double doors with two active leafs, the sign shall be located to the right of the right hand door. Where there is no wall space at the latch side of a single door or at the right side of double doors, signs shall be located on the nearest adjacent wall. Signs containing tactile characters shall be located so that a clear floor space of 18 inches (455 mm) minimum by 18 inches (455 mm) minimum, centered on the tactile characters, is provided beyond the arc of any door swing between the closed position and 45 degree open position.

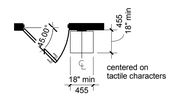

Figure 703.4.2 Location of Tactile Signs at Doors

703.5 Visual Characters. Visual characters shall comply with 703.5. 703.5.1 Finish and Contrast. Characters and their background shall have a non-glare finish. Characters shall contrast with their background with either light characters on a dark background or dark characters on a light background.

703.5.2 Case. Characters shall be uppercase or lowercase or a combination of both.

703.5.3 Style. Characters shall be conventional in form. Characters shall not be italic, oblique, script, highly decorative, or of other unusual forms.

703.5.4 Character Proportions. Characters shall be selected from fonts where the width of the uppercase letter "O" is 55 percent minimum and 110 percent maximum of the height of the uppercase letter "I".

703.5.5 Character Height. Minimum character height shall comply with Table 703.5.5. Viewing distance shall be measured as the horizontal distance between the character and an obstruction preventing further approach towards the sign. Character height shall be based on the uppercase letter "I".

703.5.6 Height From Finish Floor or Ground. Visual characters shall be 40 inches (1015 mm) minimum above the finish floor or ground.

703.5.7 Stroke Thickness. Stroke thickness of the uppercase letter "I" shall be 10 percent minimum and 30 percent maximum of the height of the character.

703.5.8 Character Spacing. Character spacing shall be measured between the two closest points of adjacent characters, excluding word spaces. Spacing between individual characters shall be 10 percent minimum and 35 percent maximum of character height. 703.5.9 Line Spacing. Spacing between the baselines of separate lines of characters within a message shall be 135 percent minimum and 170 percent maximum of the character height. 703.6 Pictograms. Pictograms shall comply with 703.6. 703.6.1 Pictogram Field. Pictograms shall have a field height of 6 inches (150 mm) minimum. Characters and braille shall not be located in the pictogram field.

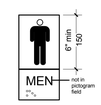

Figure 703.6.1 Pictogram Field dark-on-light.

703.6.2 Finish and Contrast. Pictograms and their field shall have a non-glare finish. Pictograms shall contrast with their field with either a light pictogram on a dark field or a dark pictogram on a light field.

703.6.3 Text Descriptors. Pictograms shall have text descriptors located directly below the pictogram field. Text descriptors shall comply with 703.2, 703.3 and 703.4. 703.7 Symbols of Accessibility. Symbols of accessibility shall comply with 703.7. 703.7.1 Finish and Contrast. Symbols of accessibility and their background shall have a non-glare finish. Symbols of accessibility shall contrast with their background with either a light symbol on a dark background or a dark symbol on a light background.

704 Telephones 704.1 General. Public telephones shall comply with 704.

704.2 Wheelchair Accessible Telephones. Wheelchair accessible telephones shall comply with 704.2.

704.2.1 Clear Floor or Ground Space. A clear floor or ground space complying with 305 shall be provided. The clear floor or ground space shall not be obstructed by bases, enclosures, or seats. Advisory 704.2.1 Clear Floor or Ground Space. Because clear floor and ground space is required to be unobstructed, telephones, enclosures and related telephone book storage cannot encroach on the required clear floor or ground space and must comply with the provisions for protruding objects. (See Section 307).

704.2.1.1 Parallel Approach. Where a parallel approach is provided, the distance from the edge of the telephone enclosure to the face of the telephone unit shall be 10 inches (255 mm) maximum.

muñoz & company
1017 NORTH MAIN SUITE 300
SAN ANTONIO, TEXAS 78212
O. 210.349.1163 F. 210.525.1038
W W W . M U N O Z - C O . C O M

REGISTERED ARCHITECT
JACOB EDWARDS
18803
STATE OF TEXAS

UTRGV
The University of Texas Rio Grande Valley

UNIVERSITY OF TEXAS RIO GRANDE VALLEY
SCHOOL OF MEDICINE
TEAM BASED LEARNING CENTER
PROJECT NO: 903-1159
EDINBURG, TX
100% CONSTRUCTION DOCUMENTS

Issue/Revision

#	DESCRIPTION	DATE

Sheet Title
ACCESSIBILITY GUIDELINES

Date
NOVEMBER 08, 2018

Project Number	Drawn By	Checked By
A17021.00	RL	CC

Sheet Number
G-102

CODE SUMMARY

PROJECT TITLE: SCHOOL OF MEDICINE - SUPPORT OFFICES
PROJECT DESCRIPTION: TWO-STORY ADMINISTRATIVE OFFICES. THE BUILDING WILL NOT CONTAIN APPRECIABLE QUANTITIES OF HAZARDOUS/FLAMMABLE MATERIALS.

APPLICABLE CODES & STANDARDS

2015 INTERNATIONAL BUILDING CODE (IBC)
2015 INTERNATIONAL FIRE CODE (IFC)
2015 NATIONAL FIRE PROTECTION ASSOCIATION (NFPA) 101, THE LIFE SAFETY CODE
2015 NFPA 1, FIRE CODE
2013 NFPA 13, STANDARD FOR THE INSTALLATION OF SPRINKLER SYSTEMS
2013 NFPA 72, NATIONAL FIRE ALARM AND SIGNALING CODE

OCCUPANCY/CONSTRUCTION TYPE	NFPA 101	IBC/IFC
OCCUPANCY:	NEW BUSINESS (6.1.11.1)	GROUP B (304)
	NEW ASSEMBLY (6.1.2.1)	GROUP A-3 (303.4)
SEPARATED OCCUPANCIES:	NONE (SINGLE USE/NONSEPARATED)	
CONSTRUCTION TYPE:	TYPE II(000)	IIB

ALLOWABLE AREA (IBC CALCULATION FOR TYPE IIB CONSTRUCTION) [BASED ON A-3, MOST CONSERVATIVE]

TABULAR ALLOWABLE AREA:	28,500 SF (IBC TABLE 506.2)
FRONTAGE INCREASE:	NOT APPLIED - 75% (MAXIMUM) (IBC 506.3)
TOTAL ALLOWABLE AREA:	28,500 SF
ACTUAL AREA (MAX):	13,200 SF (LEVEL 1)
ALLOWABLE STORIES:	3 (IBC TABLE 504.4)
ACTUAL STORIES:	2

NFPA 101 DETERMINATION OF CONSTRUCTION TYPE (TABLE 12.1.6)

1 STORY ASSEMBLY FUNCTION WITH < 300 PERSON ASSEMBLY USE
2 STORY BUSINESS OCCUPANCY

FIRE RESISTANCE RATINGS	NFPA 101	IBC/IFC
OCCUPANCY SEPARATION:	NONE (6.1.14.3)	NONE (508.3)
SPECIAL PROTECTION (4-SIDED PERIMETER ONLY)	PROVIDED TO DATA/IT ROOMS PER USER REQUEST	
CORRIDORS:	0 HR (12.3.6.2)	0 HR (TABLE 1020)
INTERIOR SHAFTS CONNECTING < 4 STORIES:	1 HR (8.6.5)	1 HR (713.4)
INTERIOR STAIR PROTECTION:	1 HR (7.2.2.5.2.1)	1 HR (1023.2)
INTERIOR STAIR DOORS (SELF-CLOSING):	1 HR (7.2.1.8)	1 HR (TABLE 716.5)
EXTERIOR WALL RATINGS		
REQUIRED FOR FIRE SEPARATION DISTANCE:	N/A	NONE (TABLE 705.8)
EXTERIOR STAIR PROTECTION (2 STORIES):	0 HR (7.2.2.6.3.1(2))	0 HR (1027.6(1))
PROTECTION FROM HAZARDS:	NONE IDENTIFIED (12.3.2)	NONE IDENTIFIED (509)
ELEVATOR SHAFTS/MACHINE ROOMS:	1 HR (8.6.5)	1 HR (713.4/3002.1)

UNPROTECTED VERTICAL OPENINGS	NFPA 101	IBC/IFC
2-STORY LOBBY:	8.6.9.1*	712.1.9

* ALTERNATE METHOD OF COMPLIANCE USING DRAFT STOPS AND CLOSELY-SPACED SPRINKLERS PER NFPA 13 SECTION 8.15.4.

INTERIOR FINISH RATINGS	NFPA 101 (10.2/12.3.3)	IBC/IFC (TABLE 803.11)
EXIT STAIRWAYS, RAMPS, PASSAGEWAYS:	CLASS A OR B	CLASS A OR B
CORRIDORS:	CLASS A OR B	CLASS A OR B
ROOMS AND ENCLOSED SPACES:	CLASS A, B, OR C	CLASS A, B, OR C

FIRE SAFETY SYSTEMS	NFPA 101	IBC/IFC
AUTOMATIC SPRINKLERS:	REQUIRED	REQUIRED
LIGHT HAZARD:	OFFICES, MEETING, COMMON, AND ADMINISTRATIVE SUPPORT AREAS.	
ORDINARY HAZARD GROUP 1:	MECHANICAL SPACES, STORAGE ROOMS (LOW DENSITY).	
ORDINARY HAZARD GROUP 2:	HIGHER-DENSITY STORAGE ROOMS.	
STANDPIPE SYSTEM:	NOT REQUIRED (NFPA 14)	NOT REQUIRED (905.3.1/905.3.2)
OCCUPANT NOTIFICATION FIRE ALARM SYSTEM:	REQUIRED	REQUIRED
EMERGENCY VOICE ALARM COMMUNICATION (EVACS) SYSTEM PER CAMPUS STANDARDS		
FIRE EXTINGUISHERS (LIGHT HAZARD OCCUPANCY):		
MINIMUM RATING: 2A (PROVIDED 10 LB. 4A:80B:C)	TABLE 6.2.1.1	TABLE 906.3(1)
MAXIMUM AREA PER 4A EXT.: 11,250 SF	TABLE 6.2.1.1	TABLE 906.3(1)
MAXIMUM TRAVEL DISTANCE: 75 FT	TABLE 6.2.1.1	TABLE 906.3(1)

OCCUPANT LOAD CALCULATIONS FACTORS	NFPA 101 (TABLE 7.3.1.2)	IBC/IFC (TABLE 1004.1.2
BUSINESS/CONCOURSES:	100 SF/OCCUPANT (GROSS)	
UNCONCENTRATED SEATING:	15 SF/OCCUPANT (NET)	
CLASSROOMS/COMPUTER LABS:	20 SF/OCCUPANT (NET)	
MECHANICAL/STORAGE ROOMS:	500 SF/OCCUPANT (NET)	

REQUIRED EGRESS WIDTH FACTORS	NFPA 101	IBC/IFC
LEVEL EXITS:	0.20 IN./OCC. (TABLE 7.3.3.1)	0.15 IN./OCC. (1005.3.2(1))
STAIRS:	0.30 IN./OCC. OR EQUATION (7.3.3.2)	0.20 IN./OCC. (1005.3.1(1))

MINIMUM CLEAR WIDTH	NFPA 101	IBC/IFC
LEVEL EXITS:	32 IN. (7.2.1.2.3)	32 IN. (1010.1.1)
STAIRS:	44 IN. (TABLE 7.2.2.2.1.1(B))	44 IN. (1011.2)
CORRIDORS:	44 IN. (12.2.3.8)	44 IN. (TABLE 1020.2)

MEANS OF EGRESS CONFIGURATION	NFPA 101	IBC/IFC
NUMBER:		
1-500 OCCUPANTS:	TWO (7.4.1.2)	TWO (TABLE 1006.3.1)
501-999 OCCUPANTS:	THREE (7.4.1.2)	THREE (TABLE 1006.3.1)
MINIMUM EXIT SEPARATION:		
1/3 DIAGONAL OF AREA SERVED	7.5.1.3.3	1007.1.1(2)

MEANS OF EGRESS MARKING/ILLUMINATION	NFPA 101	IBC/IFC
EXIT SIGNAGE:		
CHANGES IN DIRECTION:	7.10.2.1	1013.1
ROOMS WITH 2 OR MORE EXITS:	7.10.1.5.1	1013.1(1)
CORRIDOR MARKING:	7.10.1.5.2	1013.1
SIGNAGE ILLUMINATION:	INTERNAL/90 MIN. (7.8)	INTERNAL/90 MIN. (1013.5/1013.6.2)
MEANS OF EGRESS ILLUMINATION:		
NORMAL POWER:		
STAIRS	10 FC (7.8.1.3.1)	1 FC (1008.2.1)
FLOORS	1 FC (7.8.1.3.2)	1 FC (1008.2.1)
EMERGENCY POWER:		
STAIRS	0.6 FC AVG. / 0.06 FC MIN. (7.9.2.1.2)	0.6 FC AVG. / 0.06 FC MIN. (1008.3.5)
FLOORS	0.6 FC AVG. / 0.06 FC MIN. (7.9.2.1.2)	0.6 FC AVG. / 0.06 FC MIN. (1008.3.5)
DURATION:	90 MIN. (7.9.2.1)	90 MIN. (1008.3.4)

MAX. TRAVEL DISTANCES (NEW BUSINESS)	NFPA 101	IBC/IFC
COMMON PATH OF TRAVEL	100 FT (TABLE A.7.6)	100 FT (1029.8)
DEAD-END LIMIT	50 FT (TABLE A.7.6)	50 FT (1020.4)
TOTAL TRAVEL DISTANCE	300 FT (TABLE A.7.6)	3000 FT (TABLE 1017.2)

NOTE: ASSEMBLY OCCUPANCY HAS TWO EXITS ON LEVEL OF EXIT DISCHARGE (LEVEL 1).

muñoz & company
1017 NORTH MAIN SUITE 300
SAN ANTONIO, TEXAS 78212
O. 210.349.1163 F. 210.525.1038
WWW.MUNOZ-CO.COM

STATE OF TEXAS
ANDRE GARABEDIAN
LICENSED PROFESSIONAL ENGINEER
11-28-18

GA Garabedian Associates
Fire Protection Engineering & Code Consulting
16218 Juan Tabo Way
Helotes, TX 78023
Phone: (210) 592-1325
Cell: (210) 316-5775

UTRGV
The University of Texas Rio Grande Valley

UNIVERSITY OF TEXAS RIO GRANDE VALLEY
SCHOOL OF MEDICINE
TEAM BASED LEARNING CENTER
PROJECT NO: 903-1159
EDINBURG, TX
100% CONSTRUCTION DOCUMENTS

Issue/Revisions

#	DESCRIPTION	DATE

Sheet Title
LIFE SAFETY CODE SUMMARY

Date
NOVEMBER 08, 2018

Project Number	Drawn By	Checked By
A17021.00	ASG	ASG

Sheet Number
LS-101

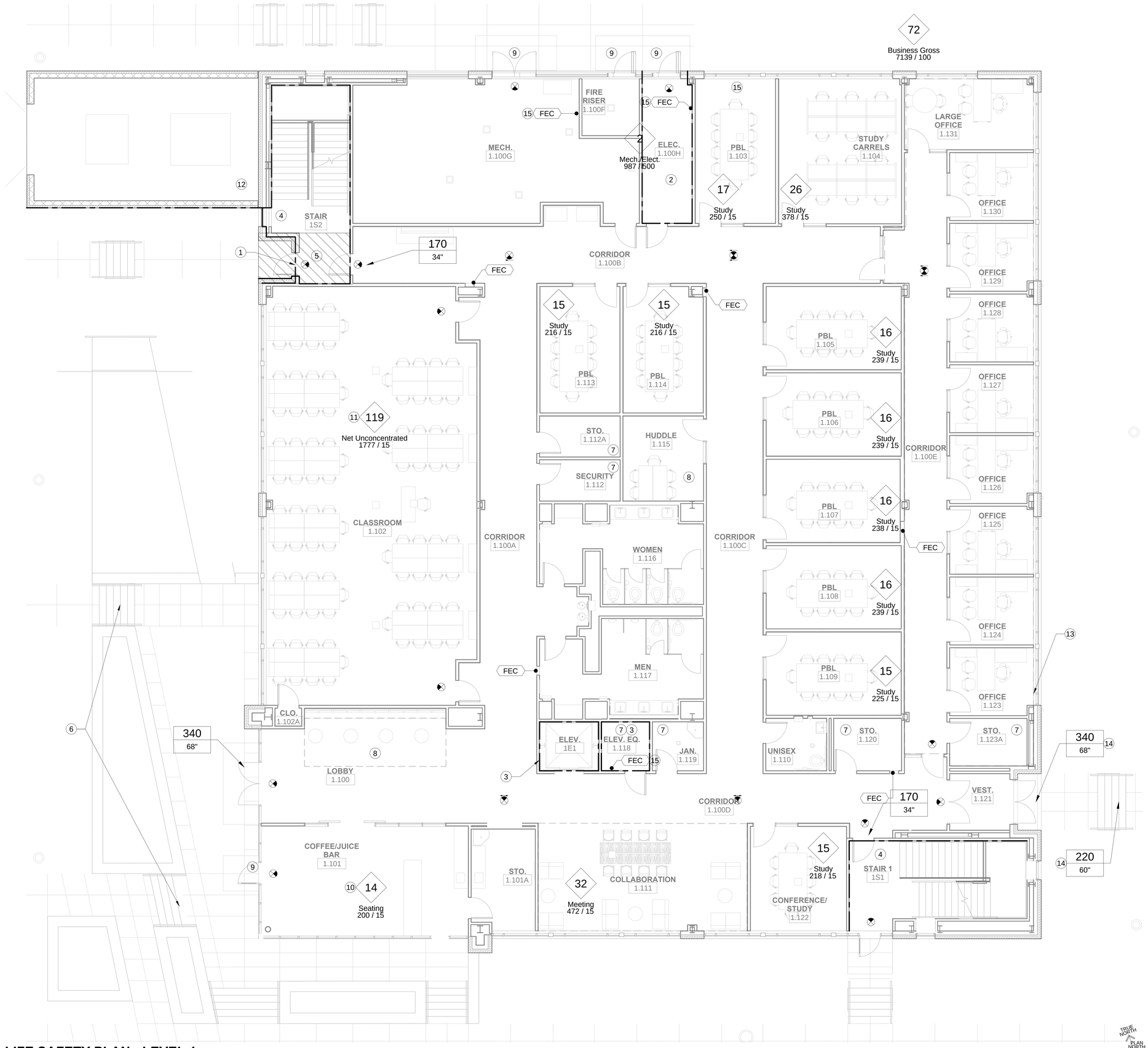

1 **LIFE SAFETY PLAN - LEVEL 1**

3/16" = 1'-0"

SHEET NOTES

1. EXTEND FIRE RESISTANCE RATING ALONG EXTERIOR WALL TO CONTINUE PROTECTION OF EXIT DISCHARGE.
2. 150KVA TRANSFORMER. RATING PROVIDED PER NFPA 70 450.21(B).
3. ELEVATOR SHAFT AND MACHINE ROOM ARE RATED 1-HR AND CONSTRUCTED AS A FIRE BARRIER PER NFPA 1 SECTION 12.7 AND IBC SECTION 707.
4. STAIR ENCLOSURE RATED 1-HR AND CONSTRUCTED AS A FIRE BARRIER PER NFPA 1 SECTION 12.7 AND IBC SECTION 707. INCLUDE 1-HR RATED PROTECTED OPENINGS.
5. FIRE RESISTANCE RATING OF STAIR ENCLOSURE CEILING MUST BE MAINTAINED IN THIS HORIZONTAL TRANSITION, INCLUDING SUPPORTING STRUCTURE.
6. EXIT DISCHARGE TO THE PUBLIC WAY AT MULTIPLE POINTS ON PLAZA LEVEL. PLAZA LEVEL STAIRS CREDITED WITH A MAXIMUM 60-IN. EGRESS WIDTH (NO CENTER HANDRAILS)
7. SMALL STORAGE/SUPPORT ROOM AREAS INCLUDED IN GROSS BUSINESS AREA (CONSERVATIVE).
8. NET SEATING AREA ASSIGNED TO LOBBY.
9. DOORS FROM ROOMS WITH DIRECT EXITS WERE NOT INCLUDED IN EGRESS CAPACITY FOR THE FLOOR.
10. COFFEE SHOP SEATING AREA ASSUMED AT 200 SF AND 14 PERSONS.
11. ASSEMBLY OCCUPANCY ON THE FIRST FLOOR ONLY.
12. PROVIDE 1-HR RATING TO EXTERIOR TRANSFORMER YARD WALL, TO PRESERVE MEANS OF EGRESS FROM STAIR.
13. BUSINESS AREA OCCUPANT LOAD < 50 PERSONS.
14. EGRESS CAPACITY OF RECEPTION ENTRANCE IS GOVERNED BY THE EXTERIOR STAIR WIDTH - MAXIMUM 60-IN. EGRESS WIDTH IS ASSUMED (NO CENTER HANDRAIL).
15. EXTINGUISHERS IN MECHANICAL SPACES WILL BE ON WALL-MOUNTED BRACKETS.

OCCUPANT LOAD

Occupancy	Area (sf)	Load Factor	Occupants
Business Gross	7,139	100	72
Coffee/Juice 1.101	200	15	14
Flex Classroom 1.102	1,777	15	119
TBL/PBL (1.103)	250	15	17
Study (1.104)	378	15	26
TBL/PBL (1.105)	239	15	16
TBL/PBL (1.106)	239	15	16
TBL/PBL (1.107)	238	15	16
TBL/PBL (1.108)	239	15	16
TBL/PBL (1.109)	225	15	15
Collab. 1.111	472	15	32
TBL/PBL (1.113)	216	15	15
TBL/PBL (1.114)	216	15	15
Conference (1.122)	218	15	15
Mech./Elect./Fire	987	500	2
Lobby (Seating) 1.100	137	15	10
TOTAL LOAD	**13,170**		**416**

Location	Door Width	Stair Width	Capacity
Stair 1S1	34	-	170
Lobby 1.100	68	-	340
Stair 1S2	34	-	170
Reception 1.121	68	60	220
TOTAL CAPACITY			**900**

LEGEND

- ## / Room: ??? / XXX / YYY — OCCUPANT LOAD; LOAD FACTOR (SF/OCC.); AREA (SF)
- CAPACITY XXX / YYY — CAPACITY WIDTH/FACTOR
- [###] — TRAVEL DISTANCE (FT) [COMMON PATH OR TOTAL]
- ## — KEY NOTES THIS SHEET
- "NET" AREAS CALCULATED AT SPECIFIED LOAD FACTORS
- SPECIFIED OCCUPANT LOAD AREA.
- EXIT SIGN. HATCH INDICATES ILLUMINATED FACE. ARROW NOTES DIRECTION.
- FEC — FIRE EXTINGUISHER CABINET. MINIMUM 4A:80B:C
- FECc — FIRE EXTINGUISHER WALL-MOUNT. MINIMUM 5B:C, CARBON DIOXIDE
- SMOKE PARTITION PER NFPA 101 SECTION 8.4. PROVIDE SELF-CLOSING DOORS.
- 1-HR FIRE BARRIER PER IBC 707, WITH PROTECTED OPENINGS.

GENERAL NOTES

1. MEANS OF EGRESS CALCULATIONS ARE BASED ON ASSUMED OCCUPANT LOADS AND OCCUPANT LOAD FACTORS FOUND IN NFPA 101-15, TABLE 7.3.1.2.
   - 1.1. OFFICES/COUNCOURSES: 100 SF/OCCUPANT
   - 1.2. STORAGE/MECHANICAL: 500 SF/OCCUPANT
   - 1.3. EDUCATION: 20 SF/OCCUPANT
   - 1.4. BREAK/CONFERENCE ROOMS: 15 SF/OCCUPANT
2. GROUP A AND B OCCUPANT LOADS WERE ROUNDED UP ON ANY FRACTIONAL OCCUPANT.
3. MEANS OF EGRESS WIDTH FOR INTERVENING ROOM DOORS WERE NOT CONSIDERED IN THE ANALYSIS SINCE THE OCCUPANT LOADS FOR EACH SUITE WAS LESS THAN THE EXITING CAPACITY OF EVEN A SINGLE DOOR LEAF (34 IN. SERVES 170 OCCUPANTS - PER NFPA 101 TABLE 7.3.3.1).
4. TRAVEL DISTANCE LIMITS (BUSINESS OCCUPANCY):
   - 4.1. TOTAL TRAVEL: 300 FT (NFPA 101, TABLE A.7.6)
   - 4.2. COMMON PATH TRAVEL: 100 FT (NFPA 101, TABLE A.7.6)
   - 4.3. DEAD-END TRAVEL: 50 FT (NFPA 101, TABLE A.7.6)

muñoz & company
1017 NORTH MAIN SUITE 300
SAN ANTONIO, TEXAS 78212
O. 210.349.1163 F. 210.525.1038
WWW.MUNOZ-CO.COM

STATE OF TEXAS — ANDRE GARABEDIAN — LICENSED PROFESSIONAL ENGINEER

GA Garabedian Associates
Fire Protection Engineering & Code Consulting
16218 Juan Tabo Way
Helotes, TX 78023
Phone: (210) 592-1325
Cell: (210) 316-5775

UTRGV The University of Texas Rio Grande Valley

UNIVERSITY OF TEXAS RIO GRANDE VALLEY
SCHOOL OF MEDICINE
TEAM BASED LEARNING CENTER
PROJECT NO: 903-1159
EDINBURG, TX
100% CONSTRUCTION DOCUMENTS

Issue/Revisions

#	DESCRIPTION	DATE

Sheet Title
LIFE SAFETY PLAN - LEVEL 1

Date
NOVEMBER 08, 2018

Project Number	Drawn By	Checked By
A17021.00	ASG	ASG

Sheet Number
LS-201

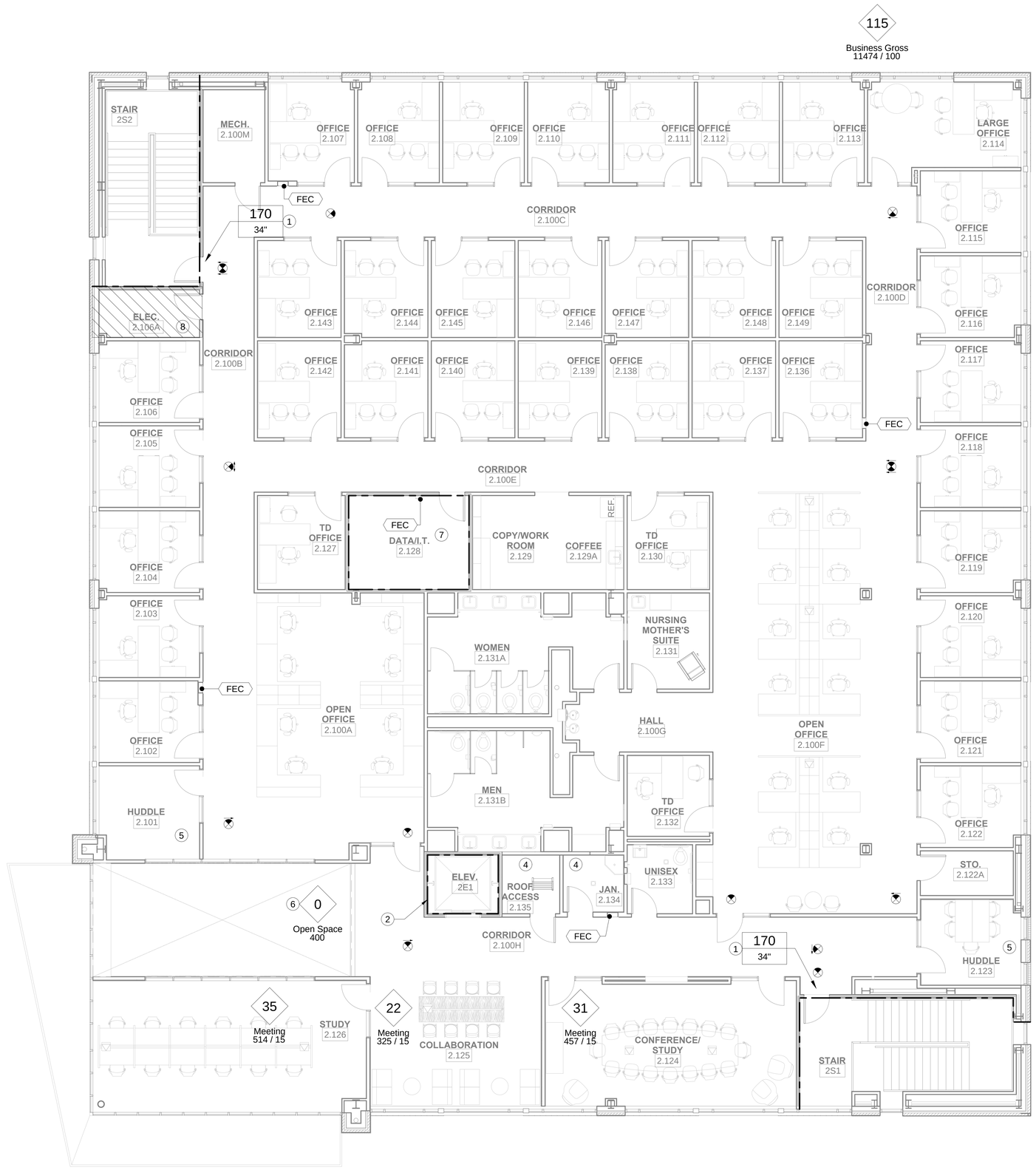

1 **LIFE SAFETY PLAN - LEVEL 2**
3/16" = 1'-0"

SHEET NOTES

1. EXITING CAPACITY OF STAIR ENCLOSURE IS DRIVEN BY DOOR WIDTH.
2. ELEVATOR SHAFT RATED 1-HR AND CONSTRUCTED AS A FIRE BARRIER PER NFPA 1 SECTION 12.7 AND IBC SECTION 707.
3. STAIR ENCLOSURE RATED 1-HR AND CONSTRUCTED AS A FIRE BARRIER PER NFPA 1 SECTION 12.7 AND IBC SECTION 707. INCLUDE 1-HR RATED PROTECTED OPENINGS.
4. SMALL STORAGE/SUPPORT ROOM AREAS INCLUDED IN GROSS BUSINESS AREA (CONSERVATIVE)
5. INCIDENTAL ASSEMBLY/HUDDLE ROOMS INCLUDED IN BUSINESS OCCUPANCY.
6. PROVIDE PROTECTION TO FLOOR OPENING USING DRAFT STOP AND CLOSELY-SPACED SPRINKLERS IN ACCORDANCE WITH NFPA 13, SECTION 8.15.4 AS AN EQUIVALENCY TO NFPA 101 SECTION 8.6.9.1(3).
7. AT OWNER REQUEST, PROVIDE CONSTRUCTION CONSISTENT WITH A 1-HR RATED FIRE BARRIER (4-SIDED ENCLOSURE) TO SURROUND DATA/IT ROOM. FLOOR AND ROOF RATINGS ARE NOT REQUIRED. SPECIFY RED FIRE STOP CAULKING AND STENCIL WALLS PER IBC 703.7 "PROTECT ALL OPENINGS WITH MINIMUM 1-HR FIRE RATED PENETRATION SYSTEMS."
8. MINOR ELECTRICAL ROOM (<112.5 kVA). NO PERIMETER ROOM RATING REQUIRED. FLOOR SYSTEM WILL NEED TO BE RATED IN THIS REGION TO PROVIDE CONTINUOUS STAIR ENCLOSURE PROTECTION TO THE FIRST FLOOR STAIR (VESTIBULE).

OCCUPANT LOAD

Occupancy	Area (sf)	Load Factor	Occupants
Business Gross	11,474	100	115
Conference 2.124	457	15	31
Collaboration 2.125	325	15	22
Study Space 2.126	514	15	35
Open Lobby 2.000	400	0	0
TOTAL LOAD	**13,170**		**203**

Location	Door Width	Stair Width	Capacity
2S1	34	60	170
2S2	34	60	170
TOTAL CAPACITY			**340**

LEGEND

- ## — OCCUPANT LOAD
- Room: ??? / XXX / YYY — LOAD FACTOR (SF/OCC.); AREA (SF)
- CAPACITY / XXX / YYY — CAPACITY WIDTH/FACTOR
- [###] — TRAVEL DISTANCE (FT) [COMMON PATH OR TOTAL]
- ## — KEY NOTES THIS SHEET
- "NET" AREAS CALCULATED AT SPECIFIED LOAD FACTORS
- SPECIFIED OCCUPANT LOAD AREA.
- EXIT SIGN. HATCH INDICATES ILLUMINATED FACE. ARROW NOTES DIRECTION.
- FEC — FIRE EXTINGUISHER CABINET. MINIMUM 4A:80B:C
- FECc — FIRE EXTINGUISHER WALL-MOUNT. MINIMUM 5B:C, CARBON DIOXIDE
- SMOKE PARTITION PER NFPA 101 SECTION 8.4. PROVIDE SELF-CLOSING DOORS.
- 1-HR FIRE BARRIER PER IBC 707, WITH PROTECTED OPENINGS.

GENERAL NOTES

1. MEANS OF EGRESS CALCULATIONS ARE BASED ON ASSUMED OCCUPANT LOADS AND OCCUPANT LOAD FACTORS FOUND IN NFPA 101-15, TABLE 7.3.1.2.
   - 1.1. OFFICES/COUNCOURSES: 100 SF/OCCUPANT
   - 1.2. STORAGE/MECHANICAL: 500 SF/OCCUPANT
   - 1.3. EDUCATION: 20 SF/OCCUPANT
   - 1.4. BREAK/CONFERENCE ROOMS: 15 SF/OCCUPANT
2. GROUP A AND B OCCUPANT LOADS WERE ROUNDED UP ON ANY FRACTIONAL OCCUPANT.
3. MEANS OF EGRESS WIDTH FOR INTERVENING ROOM DOORS WERE NOT CONSIDERED IN THE ANALYSIS SINCE THE OCCUPANT LOADS FOR EACH SUITE WAS LESS THAN THE EXITING CAPACITY OF EVEN A SINGLE DOOR LEAF (34 IN. SERVES 170 OCCUPANTS - PER NFPA 101 TABLE 7.3.3.1).
4. TRAVEL DISTANCE LIMITS (BUSINESS OCCUPANCY):
   - 4.1. TOTAL TRAVEL: 300 FT (NFPA 101, TABLE A.7.6)
   - 4.2. COMMON PATH TRAVEL: 100 FT (NFPA 101, TABLE A.7.6)
   - 4.3. DEAD-END TRAVEL: 50 FT (NFPA 101, TABLE A.7.6)

TRUE NORTH
PLAN NORTH

muñoz & company
1017 NORTH MAIN SUITE 300
SAN ANTONIO, TEXAS 78212
O. 210.349.1163 F. 210.525.1038
WWW.MUNOZ-CO.COM

STATE OF TEXAS — ANDRE GARABEDIAN — LICENSED PROFESSIONAL ENGINEER — 11-08-18

Garabedian Associates
Fire Protection Engineering & Code Consulting
16218 Juan Tabo Way
Helotes, TX 78023
Phone: (210) 592-1325
Cell: (210) 316-5775

UTRGV
The University of Texas Rio Grande Valley

UNIVERSITY OF TEXAS RIO GRANDE VALLEY
SCHOOL OF MEDICINE
TEAM BASED LEARNING CENTER
PROJECT NO: 903-1159
EDINBURG, TX
100% CONSTRUCTION DOCUMENTS

Issue/Revisions

#	DESCRIPTION	DATE

Sheet Title
LIFE SAFETY PLAN - LEVEL 2

Date
NOVEMBER 08, 2018

Project Number	Drawn By	Checked By
A17021.00	ASG	ASG

Sheet Number
LS-202

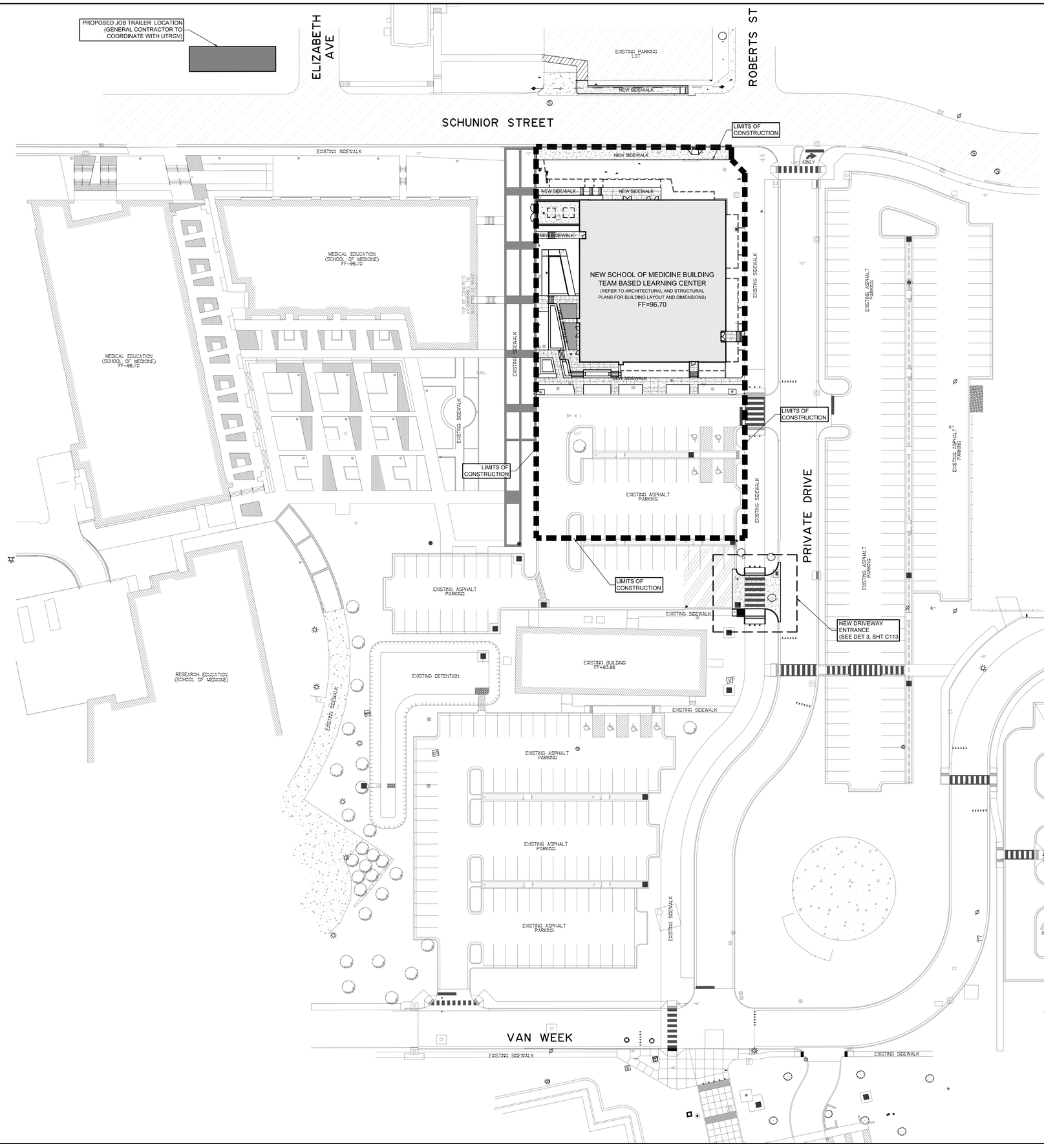

GENERAL NOTES:

1. ALL ELECTRICAL CONDUITS SHOWN IN CIVIL ENGINEERING SITE PLANS TO BE PVC THAT MEETS THE REQUIREMENTS OF NEMA STANDARD TC-2, U2651, AND THE NEC MARKED BY 5/8" GALVANIZED HEX BOLT ON TOP OF CURB OR SIDEWALK. CONDUIT TO BE 3' DEEP AND TRENCH TO BE BACKFILLED WITH IN-SITU MATERIAL AND COMPACTED TO A MINIMUM OF 95% STANDARD PROCTOR.
2. CONTRACTOR TO DEMOLISH AND REMOVE (AT HIS EXPENSE) ANY EXISTING HINDRANCES INCLUDING, BUT NOT LIMITED TO: STRUCTURES, UTILITIES, TREES, SHRUBS AND/OR CONCRETE WORK NECESSARY TO COMPLETE PROPOSED SITE WORK AND UTILITY LINES.
3. BACKFILL FOR DRAINAGE INLETS, IRRIGATION PIPE SLEEVES, ELECTRICAL CONDUIT, AND UTILITY TRENCHES SHALL BE COMPACTED TO 95% STANDARD PROCTOR DENSITY AND SHALL HAVE A PLASTICITY INDEX LESS THAN 6 P.I.
4. ALL CONCRETE SHALL BE TYPE "A" (2004 TxDOT SPEC'S) AND HAVE A MINIMUM COMPRESSIVE STRENGTH OF 3000 P.S.I. @ 28 DAYS UNLESS NOTED OTHERWISE IN PLAN DETAILS.
5. PLASTIC BAR CHAIRS OR SMALL PRECAST CONCRETE BLOCKS APPROVED BY THE ENGINEER SHALL BE USED AS SUPPORTS FOR REINFORCEMENT.
6. LONGITUDINAL REINFORCING BARS SHALL BE LAPPED AT A MINIMUM OF 18 INCHES.
7. ALL PAVEMENT MARKINGS AND SIGNAGE SHALL BE PROVIDED UNDER THIS CONTRACT.
8. CONTRACTOR IS RESPONSIBLE FOR OBTAINING ANY PERMITS NECESSARY FOR COMPLETION OF WORK.
9. LOCATIONS AND DEPTHS OF ALL EXISTING UTILITIES SHALL BE VERIFIED IN THE FIELD BY THE CONTRACTOR BEFORE INITIATING CONSTRUCTION OPERATIONS.
10. ANY DAMAGES DONE TO EXISTING PAVEMENT STRUCTURE, EXISTING SIDEWALKS, IRRIGATION SYSTEM, UTILITIES, OR OTHER STRUCTURES SHALL BE CORRECTED BY THE CONTRACTOR AT NO ADDITIONAL EXPENSE TO THE OWNER.
11. CONTRACTOR TO SUBMIT JOINT SEALER MATERIAL TO ENGINEER FOR APPROVAL.
12. ALL SIGNS SHALL CONFORM WITH THE TEXAS "MANUAL ON UNIFORM TRAFFIC CONTROL DEVICES FOR STREETS AND HIGHWAYS", LATEST EDITION.
13. POST MOUNTED SIGNS SHALL BE PLACED APPROXIMATELY 1 FOOT (OR GREATER) BEHIND THE CURB TO PREVENT DAMAGE FROM VEHICLE OVERHANG.
14. CONTRACTOR SHALL SUBMIT JOINT LAYOUT PLAN FOR CONCRETE PAVEMENT FOR APPROVAL BY ENGINEER.
15. REFER TO ELECTRICAL PLANS FOR PROPOSED ILLUMINATION ASSEMBLY DETAILS AND UNDERGROUND CONDUIT LOCATIONS. REFER TO LANDSCAPE PLANS FOR PROPOSED LANDSCAPING AND IRRIGATION LOCATIONS.
16. ALL HANDICAP RAMPS SHALL A HAVE REPLACEABLE TRUNCATED DOME DETECTABLE WARNING SYSTEM; COLOR BRICK RED, BY ADA SOLUTIONS OR METADOME OR APPROVED EQUAL.
17. ALL PAVEMENT REMOVED ALONG EXISTING PAVEMENT SECTIONS SHALL BE RECONSTRUCTED TO THE SAME THICKNESS, WIDTH, AND GRADE AS EXISTING (UNLESS OTHERWISE SPECIFIED ON THE PLANS). THIS WORK SHALL COMPLY WITH ITEM 351 2004 TxDOT STANDARD SPECIFICATIONS.
18. THERE SHALL BE A MINIMUM INTERRUPTION OF TRAFFIC AND ACCESS TO ADJACENT RESIDENTS AND UTRGV PARKING AREAS ALONG THE PROJECT SITE. IF DRIVEWAYS OR ROADS ARE TO BE CLOSED; UTRGV TRAFFIC OPERATIONS DEPARTMENT OR CITY OF EDINBURG POLICE DEPARTMENT SHALL BE CONTACTED 48 HOURS BEFORE SUCH CLOSING.
19. UNLESS OTHERWISE SPECIFIED BY THE ENGINEER, ALL OBSTRUCTIONS, OBJECTIONABLE MATERIAL AND CONCRETE SHALL BE DISPOSED PROPERLY BY HAULING IT OFF THE PROJECT AND OUT OF SIGHT FROM UTGV CAMPUS TO DISPOSAL SITES ARRANGED FOR BY THE CONTRACTOR.
20. ALL HAULING OF EXCAVATED OR REMOVED MATERIAL WILL NOT BE PAID FOR DIRECTLY BUT SHALL BE CONSIDERED AS SUBSIDIARY TO THE PROJECT COST.
21. FURNISH HYDRAULIC CEMENT CONCRETE FOR CONCRETE PAVEMENTS, CONCRETE STRUCTURES AND OTHER CONCRETE CONSTRUCTION IN ACCORDANCE WITH ITEM 421 TxDOT (2004) STANDARD SPECIFICATIONS.
22. LIMIT AIR ENTRAINMENT TO LESS THAN 2% IN ALL CONCRETE MIXES.
23. CONSTRUCT CONCRETE STRUCTURES IN ACCORDANCE TO ITEM 420 TxDOT (2004) STANDARD SPECIFICATIONS.
24. PROVIDE MEMBRANE CURING COMPOUND ON ALL CONCRETE WORK SPECIFIED IN THE PLANS. CONTRACTOR TO SUBMIT MEMBRANE CURING COMPOUND FOR ENGINEERS APPROVAL.
25. CONTRACTOR SHALL PROVIDE TRENCH PROTECTION FOR EXCAVATIONS GREATER THAN 5 FEET BELOW GROUND ELEVATION IN ACCORDANCE TO O.S.H.A. REQUIREMENTS.
26. CONTRACTOR SHALL COORDINATE STAGING AREA AND HAUL ROUTES WITH OWNER.
27. CONTRACTOR TO REFER TO "SPECIAL PROJECT CONDITION" SECTION 007400 OF THE SPECIFICATIONS FOR ADDITIONAL INFORMATION.
28. ACCORDING TO THE FEDERAL EMERGENCY MANAGEMENT AGENCY (FEMA), LETTER OF MAP REVISION (LOMR) WITH EFFECTIVE DATE OF MAY 14, 2001, CASE NUMBER-01-06-1095P, REVISION TO PANEL DEFINED BY FEMA AS AREAS OF 500 YEAR FLOOD, AREAS OF 100 YEAR FLOOD WITH AVERAGE DEPTHS OF LESS THAN SQUARE MILE, AND AREAS PROTECTED BY LEVEES FROM 100 YEAR FLOOD.

LEGEND

- = PROPOSED BUILDING
- = PROPOSED SIDEWALK SECTION
- = BM "X" CUT IN CONCRETE
- = SET NAIL
- = SET 1/2" ROD
- = ELECTRICAL BOX
- = FIRE HYDRANT
- = GRATE INLET
- = IRRIGATION CONTROL BOX
- = LIGHT POST
- = UTILITY MANHOLE
- = SIGN
- = WATER METER
- = WATER VALVE
- —W— = EXISTING WATERLINE
- —SS— = EXISTING SANITARY SEWER
- —FOC— = EXISTING FIBER OPTIC CABLE
- —T— = EXISTING TELEPHONE CABLE
- —ST— = EXISTING STORM SEWER LINE

muñoz & company
1017 NORTH MAIN SUITE 300
SAN ANTONIO, TEXAS 78212
O. 210.349.1163 F. 210.525.1038
WWW.MUNOZ-CO.COM

PCE
Texas Registered Engineering Firm F-2158
808 Dallas Ave. McAllen, Texas 78501
(956) 631-4452

STATE OF TEXAS
J. DAVID PEREZ
89429
LICENSED PROFESSIONAL ENGINEER
11-6-18

UTRGV
The University of Texas Rio Grande Valley

UNIVERSITY OF TEXAS RIO GRANDE VALLEY
SCHOOL OF MEDICINE
TEAM BASED LEARNING CENTER

PROJECT NO:903-1159
EDINBURG, TX

100% CONSTRUCTION DOCUMENTS

Issue/Revision

#	DESCRIPTION	DATE

Sheet Title
OVERALL SITE PLAN

Date
NOVEMBER 8, 2018

Project Number	Drawn By	Checked By
MUN18103	JH	DP

Sheet Number
C100

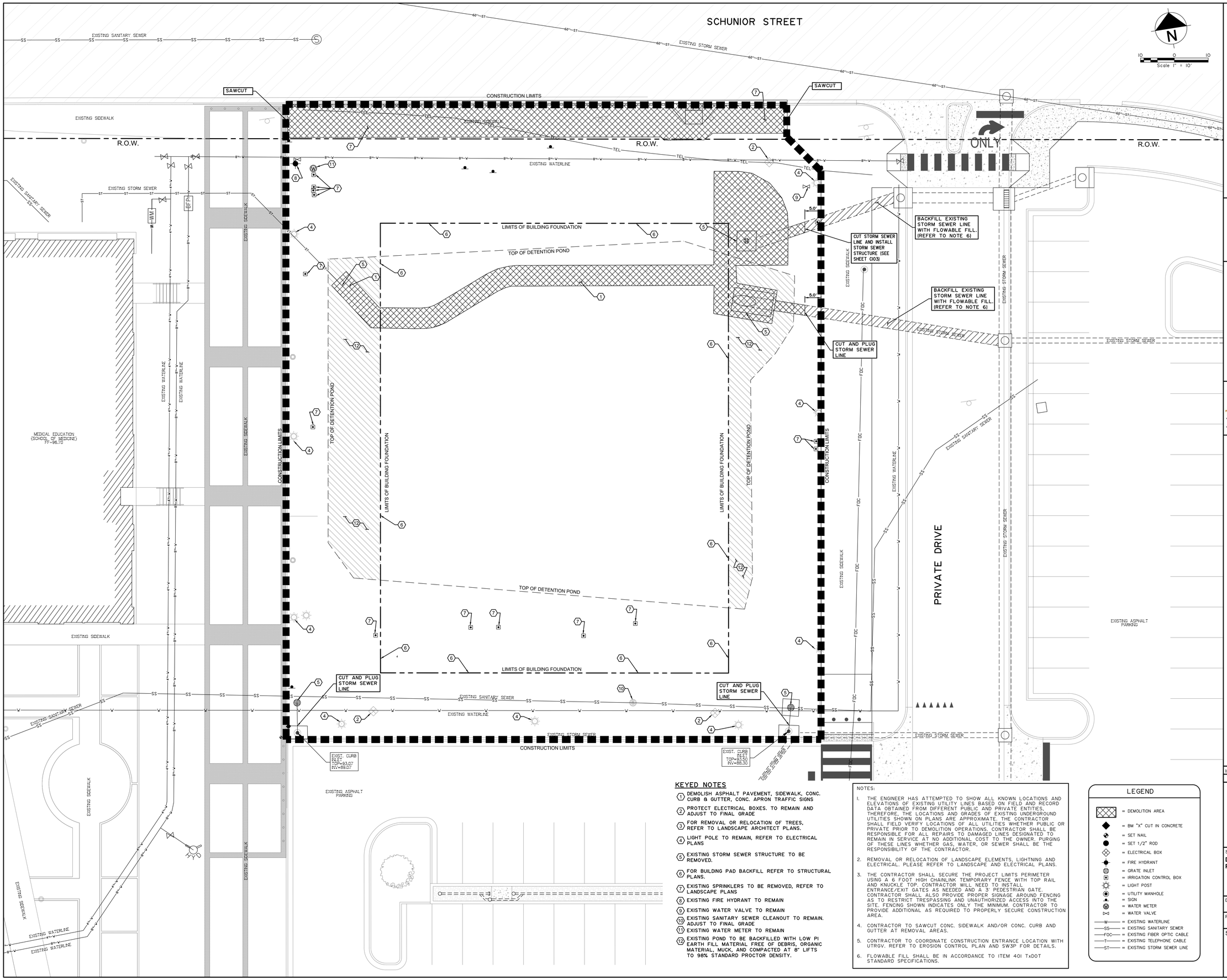

KEYED NOTES

1. DEMOLISH ASPHALT PAVEMENT, SIDEWALK, CONC. CURB & GUTTER, CONC. APRON TRAFFIC SIGNS
2. PROTECT ELECTRICAL BOXES. TO REMAIN AND ADJUST TO FINAL GRADE
3. FOR REMOVAL OR RELOCATION OF TREES, REFER TO LANDSCAPE ARCHITECT PLANS.
4. LIGHT POLE TO REMAIN, REFER TO ELECTRICAL PLANS
5. EXISTING STORM SEWER STRUCTURE TO BE REMOVED.
6. FOR BUILDING PAD BACKFILL REFER TO STRUCTURAL PLANS.
7. EXISTING SPRINKLERS TO BE REMOVED, REFER TO LANDSCAPE PLANS
8. EXISTING FIRE HYDRANT TO REMAIN
9. EXISTING WATER VALVE TO REMAIN
10. EXISTING SANITARY SEWER CLEANOUT TO REMAIN. ADJUST TO FINAL GRADE
11. EXISTING WATER METER TO REMAIN
12. EXISTING POND TO BE BACKFILLED WITH LOW PI EARTH FILL MATERIAL FREE OF DEBRIS, ORGANIC MATERIAL, MUCK, AND COMPACTED AT 8" LIFTS TO 98% STANDARD PROCTOR DENSITY.

NOTES:

1. THE ENGINEER HAS ATTEMPTED TO SHOW ALL KNOWN LOCATIONS AND ELEVATIONS OF EXISTING UTILITY LINES BASED ON FIELD AND RECORD DATA OBTAINED FROM DIFFERENT PUBLIC AND PRIVATE ENTITIES. THEREFORE, THE LOCATIONS AND GRADES OF EXISTING UNDERGROUND UTILITIES SHOWN ON PLANS ARE APPROXIMATE. THE CONTRACTOR SHALL FIELD VERIFY LOCATIONS OF ALL UTILITIES WHETHER PUBLIC OR PRIVATE PRIOR TO DEMOLITION OPERATIONS. CONTRACTOR SHALL BE RESPONSIBLE FOR ALL REPAIRS TO DAMAGED LINES DESIGNATED TO REMAIN IN SERVICE AT NO ADDITIONAL COST TO THE OWNER. PURGING OF THESE LINES WHETHER GAS, WATER, OR SEWER SHALL BE THE RESPONSIBILITY OF THE CONTRACTOR.
2. REMOVAL OR RELOCATION OF LANDSCAPE ELEMENTS, LIGHTNING AND ELECTRICAL. PLEASE REFER TO LANDSCAPE AND ELECTRICAL PLANS.
3. THE CONTRACTOR SHALL SECURE THE PROJECT LIMITS PERIMETER USING A 6 FOOT HIGH CHAINLINK TEMPORARY FENCE WITH TOP RAIL AND KNUCKLE TOP. CONTRACTOR WILL NEED TO INSTALL ENTRANCE/EXIT GATES AS NEEDED AND A 3' PEDESTRIAN GATE. CONTRACTOR SHALL ALSO PROVIDE PROPER SIGNAGE AROUND FENCING AS TO RESTRICT TRESPASSING AND UNAUTHORIZED ACCESS INTO THE SITE. FENCING SHOWN INDICATES ONLY THE MINIMUM. CONTRACTOR TO PROVIDE ADDITIONAL AS REQUIRED TO PROPERLY SECURE CONSTRUCTION AREA.
4. CONTRACTOR TO SAWCUT CONC. SIDEWALK AND/OR CONC. CURB AND GUTTER AT REMOVAL AREAS.
5. CONTRACTOR TO COORDINATE CONSTRUCTION ENTRANCE LOCATION WITH UTRGV. REFER TO EROSION CONTROL PLAN AND SW3P FOR DETAILS.
6. FLOWABLE FILL SHALL BE IN ACCORDANCE TO ITEM 401 TxDOT STANDARD SPECIFICATIONS.

LEGEND

- = DEMOLITION AREA
- = BM "X" CUT IN CONCRETE
- = SET NAIL
- = SET 1/2" ROD
- = ELECTRICAL BOX
- = FIRE HYDRANT
- = GRATE INLET
- = IRRIGATION CONTROL BOX
- = LIGHT POST
- = UTILITY MANHOLE
- = SIGN
- = WATER METER
- = WATER VALVE
- —W— = EXISTING WATERLINE
- —SS— = EXISTING SANITARY SEWER
- —FOC— = EXISTING FIBER OPTIC CABLE
- —T— = EXISTING TELEPHONE CABLE
- —ST— = EXISTING STORM SEWER LINE

muñoz & company
1017 NORTH MAIN SUITE 300
SAN ANTONIO, TEXAS 78212
O. 210.349.1169 F. 210.525.1038
W W W . M U N O Z - C O . C O M

PCE
Texas Registered Engineering Firm F-2158
808 Dallas Ave. McAllen, Texas 78501
(956) 631-4452

STATE OF TEXAS
J. DAVID PEREZ
89429
LICENSED
PROFESSIONAL ENGINEER
11-6-18

UTRGV
The University of Texas Rio Grande Valley

UNIVERSITY OF TEXAS RIO GRANDE VALLEY
SCHOOL OF MEDICINE
TEAM BASED LEARNING CENTER

PROJECT NO:903-1159
EDINBURG, TX

100% CONSTRUCTION DOCUMENTS

Issue/Revision

#	DESCRIPTION	DATE

Sheet Title
DEMOLITION PLAN

Date
NOVEMBER 8, 2018

Project Number	Drawn By	Checked By
MUN18103	JH	DP

Sheet Number
C101

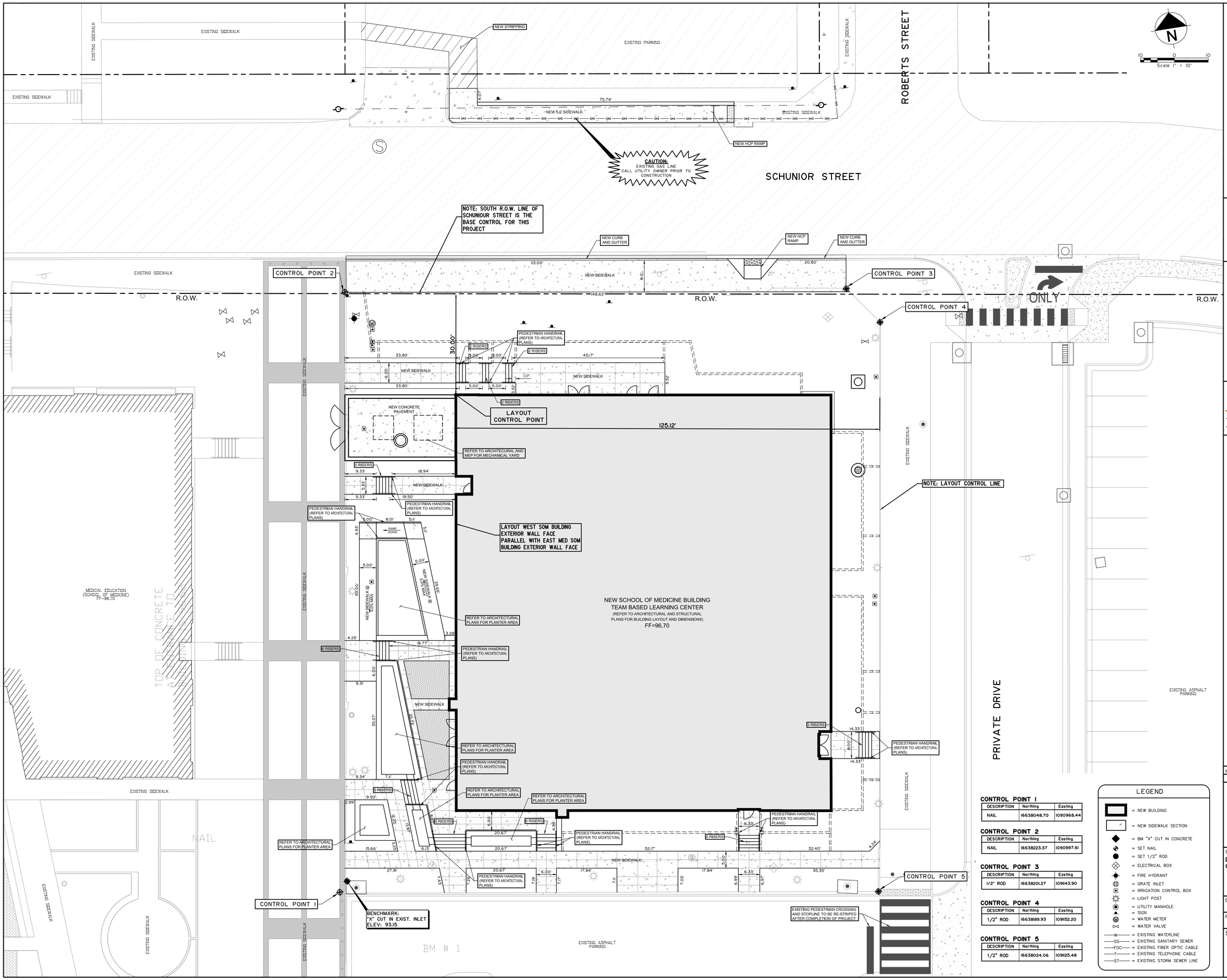

CONTROL POINT 1

DESCRIPTION	Northing	Easting
NAIL	16638048.70	1090968.44

CONTROL POINT 2

DESCRIPTION	Northing	Easting
NAIL	16638223.37	1090997.61

CONTROL POINT 3

DESCRIPTION	Northing	Easting
1/2" ROD	16638201.27	1091143.90

CONTROL POINT 4

DESCRIPTION	Northing	Easting
1/2" ROD	16638189.93	1091152.20

CONTROL POINT 5

DESCRIPTION	Northing	Easting
1/2" ROD	16638024.06	1091125.48

LEGEND

- = NEW BUILDING
- = NEW SIDEWALK SECTION
- = BM "X" CUT IN CONCRETE
- = SET NAIL
- = SET 1/2" ROD
- = ELECTRICAL BOX
- = FIRE HYDRANT
- = GRATE INLET
- = IRRIGATION CONTROL BOX
- = LIGHT POST
- = UTILITY MANHOLE
- = SIGN
- = WATER METER
- = WATER VALVE
- —W— = EXISTING WATERLINE
- —SS— = EXISTING SANITARY SEWER
- —FOC— = EXISTING FIBER OPTIC CABLE
- —T— = EXISTING TELEPHONE CABLE
- —ST— = EXISTING STORM SEWER LINE

muñoz & company
1017 NORTH MAIN SUITE 300
SAN ANTONIO, TEXAS 78212
O. 210.349.1169 F. 210.525.1038
WWW.MUNOZ-CO.COM

PCE
Texas Registered Engineering Firm F-2158
808 Dallas Ave. McAllen, Texas 78501
(956) 631-4452

STATE OF TEXAS
J. DAVID PEREZ
89429
LICENSED
PROFESSIONAL ENGINEER
11-6-18

UTRGV
The University of Texas Rio Grande Valley

UNIVERSITY OF TEXAS RIO GRANDE VALLEY

SCHOOL OF MEDICINE TEAM BASED LEARNING CENTER

PROJECT NO:903-1159
EDINBURG, TX

100% CONSTRUCTION DOCUMENTS

Issue/Revision

#	DESCRIPTION	DATE

Sheet Title
DIMENSION CONTROL PLAN

Date
NOVEMBER 8, 2018

Project Number	Drawn By	Checked By
MUN18103	JH	DP

Sheet Number
C102

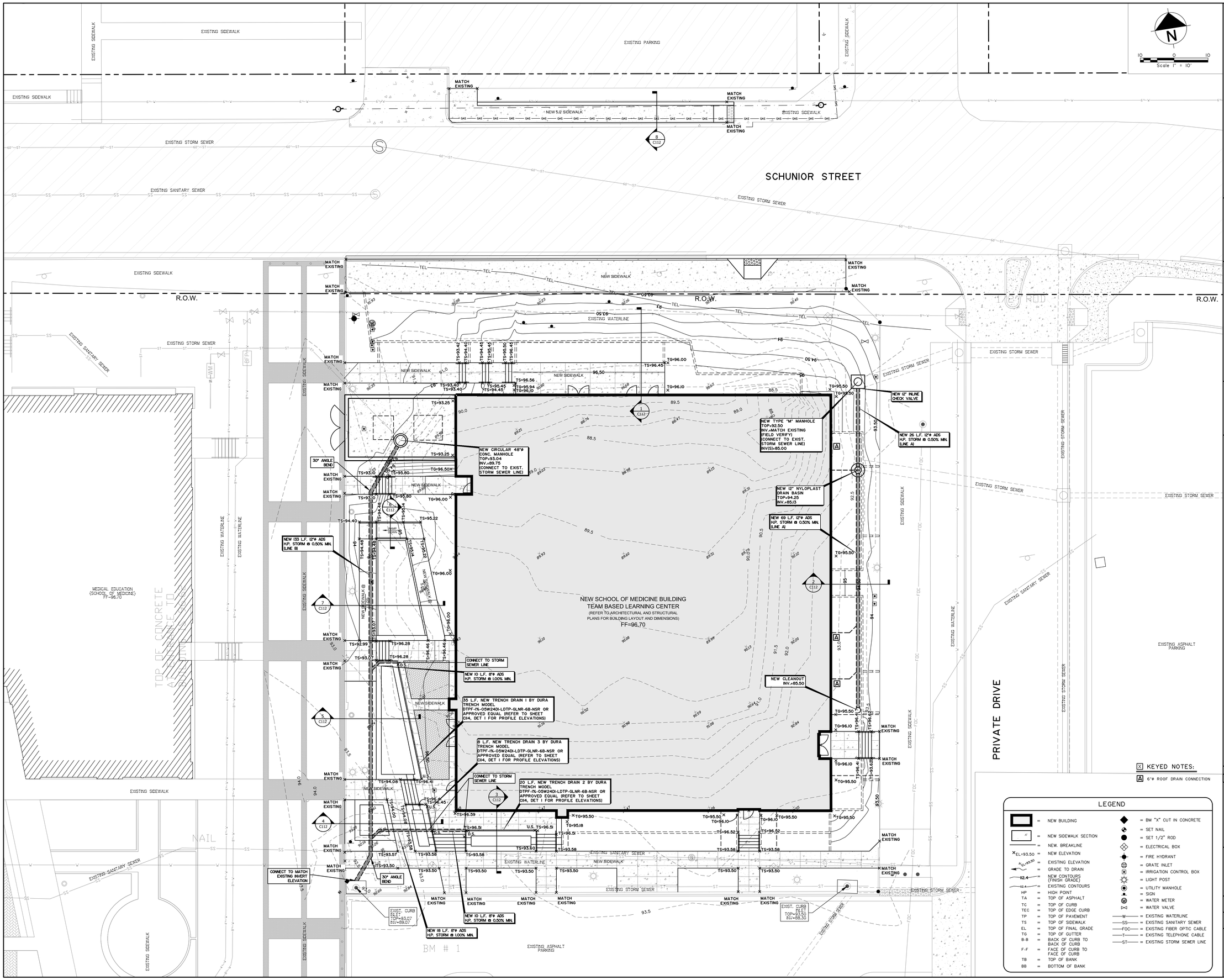

X KEYED NOTES:

A 6"ø ROOF DRAIN CONNECTION

LEGEND

	= NEW BUILDING		= BM "X" CUT IN CONCRETE
	= NEW SIDEWALK SECTION		= SET NAIL
	= NEW. BREAKLINE		= SET 1/2" ROD
EL=93.50	= NEW ELEVATION		= ELECTRICAL BOX
EL=93.50	= EXISTING ELEVATION		= FIRE HYDRANT
	= GRADE TO DRAIN		= GRATE INLET
92.4	= NEW CONTOURS (FINISH GRADE)		= IRRIGATION CONTROL BOX
92.4	= EXISTING CONTOURS		= LIGHT POST
HP	= HIGH POINT		= UTILITY MANHOLE
TA	= TOP OF ASPHALT		= SIGN
TC	= TOP OF CURB		= WATER METER
TEC	= TOP OF EDGE CURB		= WATER VALVE
TP	= TOP OF PAVEMENT	—W—	= EXISTING WATERLINE
TS	= TOP OF SIDEWALK	—SS—	= EXISTING SANITARY SEWER
EL	= TOP OF FINAL GRADE	—FOC—	= EXISTING FIBER OPTIC CABLE
TG	= TOP OF GUTTER	—T—	= EXISTING TELEPHONE CABLE
B-B	= BACK OF CURB TO BACK OF CURB	—ST—	= EXISTING STORM SEWER LINE
F-F	= FACE OF CURB TO FACE OF CURB		
TB	= TOP OF BANK		
BB	= BOTTOM OF BANK		

muñoz & company
1017 NORTH MAIN SUITE 300
SAN ANTONIO, TEXAS 78212
O. 210.349.1169 F. 210.525.1038
W W W . M U N O Z - C O . C O M

PCE
Texas Registered Engineering Firm F-2158
808 Dallas Ave. McAllen, Texas 78501
(956) 631-4452

STATE OF TEXAS
J. DAVID PEREZ
89429
LICENSED
PROFESSIONAL ENGINEER
11-6-18

UTRGV
The University of Texas Rio Grande Valley

UNIVERSITY OF TEXAS RIO GRANDE VALLEY
SCHOOL OF MEDICINE
TEAM BASED LEARNING CENTER

PROJECT NO:903-1159
EDINBURG, TX
100% CONSTRUCTION DOCUMENTS

Issue/Revision

#	DESCRIPTION	DATE

Sheet Title
GRADING AND DRAINAGE PLAN

Date
NOVEMBER 8, 2018

Project Number	Drawn By	Checked By
MUN18103	JH	DP

Sheet Number
C103

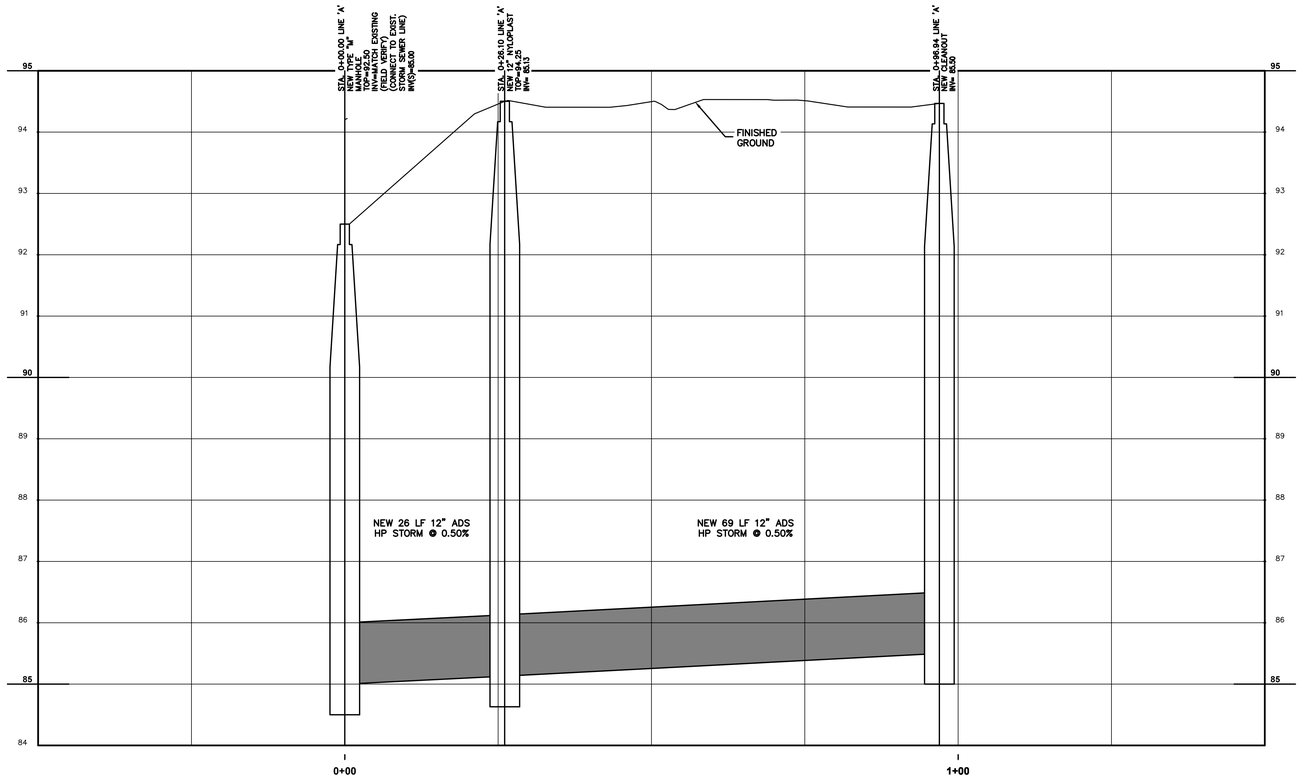

STORM SEWER PROFILE LINE 'A'

HORZ. SCALE: 1" = 10'
VERT. SCALE: 1" = 1'
VERT. EXAGGERATION: 10:1

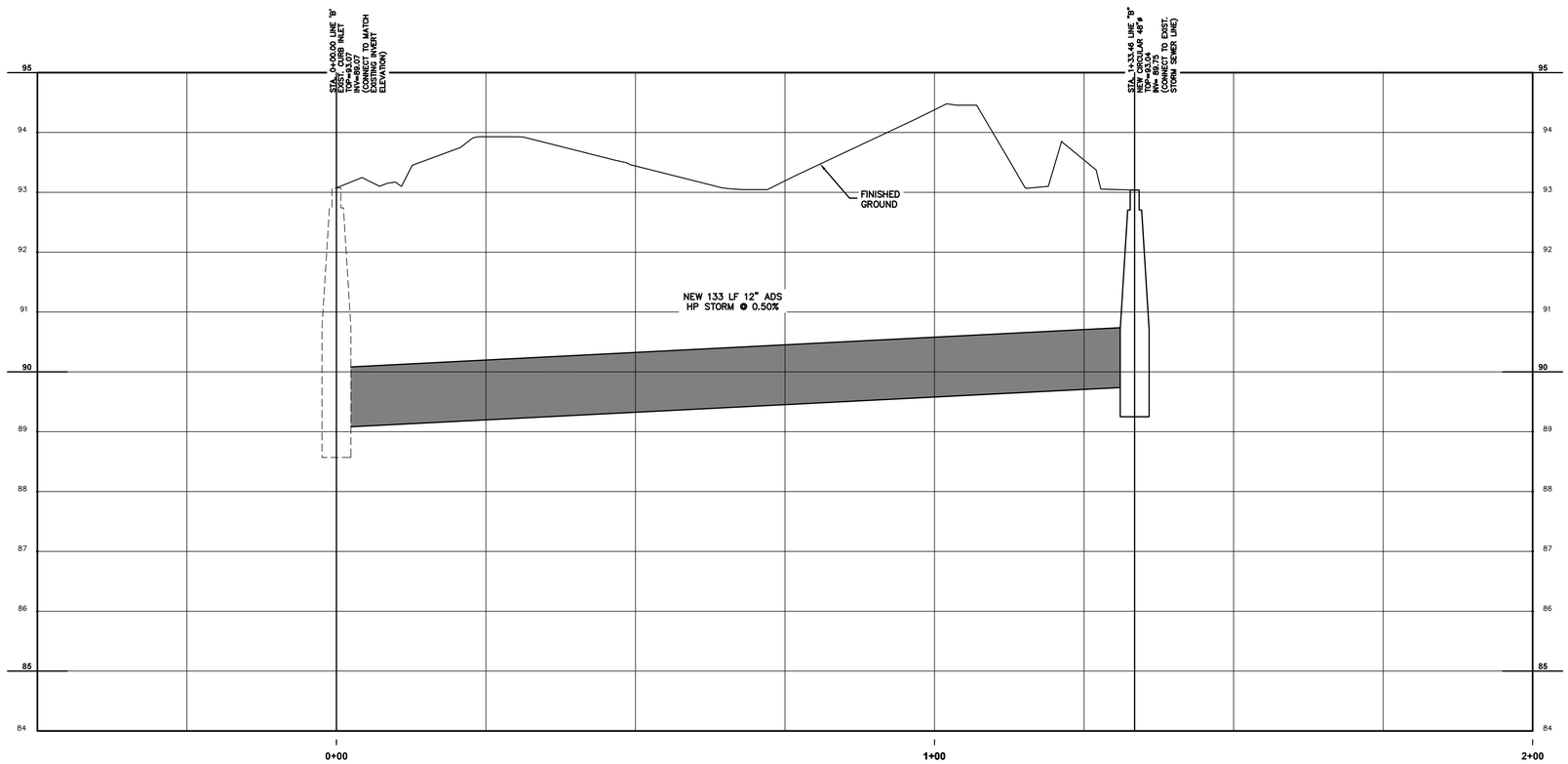

STORM SEWER PROFILE LINE 'B'

HORZ. SCALE: 1" = 10'
VERT. SCALE: 1" = 1'
VERT. EXAGGERATION: 10:1

muñoz & company
1017 NORTH MAIN SUITE 300
SAN ANTONIO, TEXAS 78212
O. 210.349.1169 F. 210.525.1038
W W W . M U N O Z - C O . C O M

PCE
Texas Registered Engineering Firm F-2158
808 Dallas Ave. McAllen, Texas 78501
(956) 631-4452

STATE OF TEXAS
J. DAVID PEREZ
89429
LICENSED
PROFESSIONAL ENGINEER
11-6-18

UTRGV
The University of Texas Rio Grande Valley

UNIVERSITY OF TEXAS RIO GRANDE VALLEY
SCHOOL OF MEDICINE
TEAM BASED LEARNING CENTER
PROJECT NO:903-1159
EDINBURG, TX
100% CONSTRUCTION DOCUMENTS

Issue/Revision

#	DESCRIPTION	DATE

Sheet Title
STORM SEWER PROFILES

Date
NOVEMBER 8, 2018

Project Number	Drawn By	Checked By
MUN18103	JH	DP

Sheet Number
C104

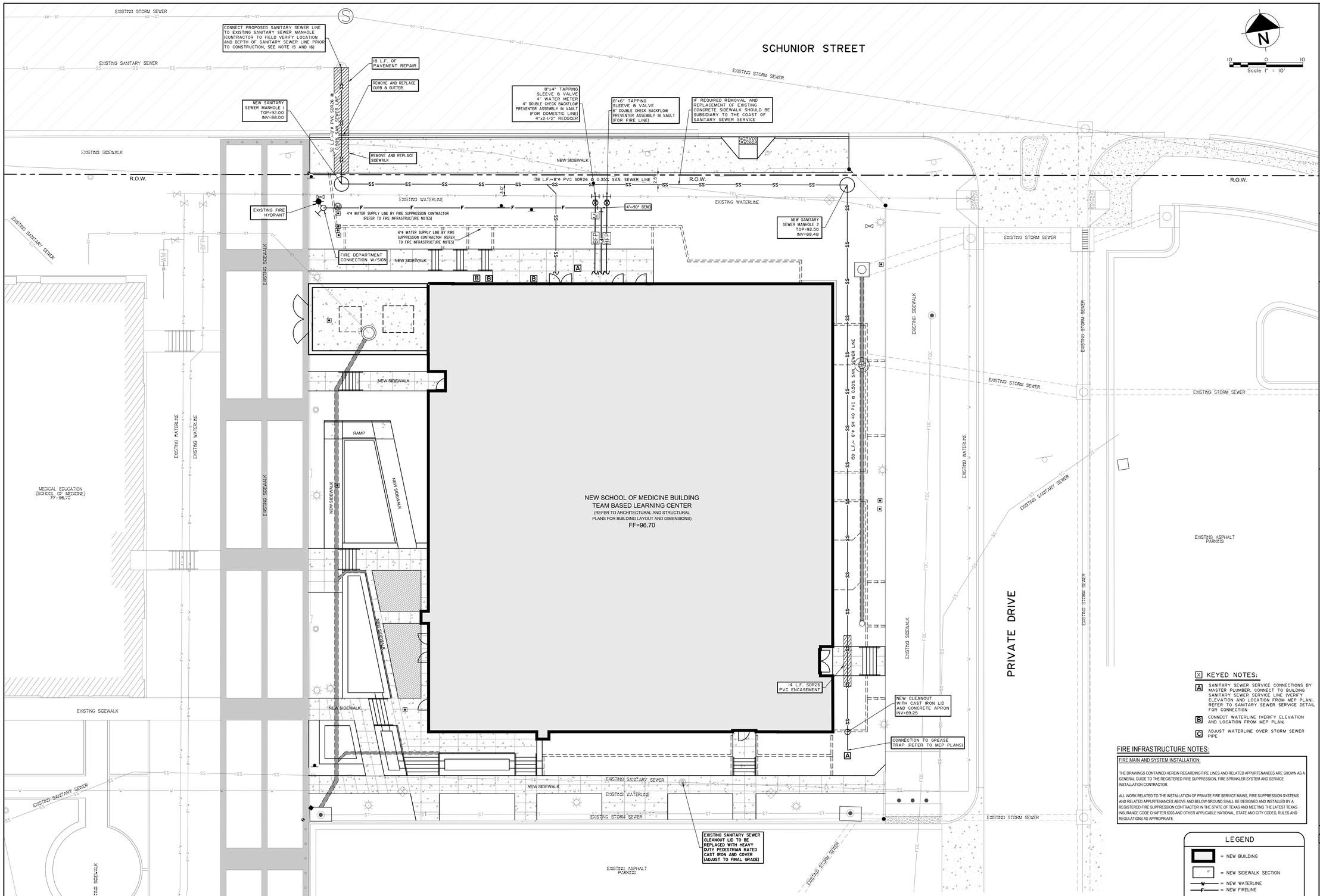

KEYED NOTES:

- [A] SANITARY SEWER SERVICE CONNECTIONS BY MASTER PLUMBER. CONNECT TO BUILDING SANITARY SEWER SERVICE LINE (VERIFY ELEVATION AND LOCATION FROM MEP PLAN). REFER TO SANITARY SEWER SERVICE DETAIL FOR CONNECTION
- [B] CONNECT WATERLINE (VERIFY ELEVATION AND LOCATION FROM MEP PLAN)
- [C] ADJUST WATERLINE OVER STORM SEWER PIPE

FIRE INFRASTRUCTURE NOTES:

FIRE MAIN AND SYSTEM INSTALLATION:

THE DRAWINGS CONTAINED HEREIN REGARDING FIRE LINES AND RELATED APPURTENANCES ARE SHOWN AS A GENERAL GUIDE TO THE REGISTERED FIRE SUPPRESSION, FIRE SPRINKLER SYSTEM AND SERVICE INSTALLATION CONTRACTOR.

ALL WORK RELATED TO THE INSTALLATION OF PRIVATE FIRE SERVICE MAINS, FIRE SUPPRESSION SYSTEMS AND RELATED APPURTENANCES ABOVE AND BELOW GROUND SHALL BE DESIGNED AND INSTALLED BY A REGISTERED FIRE SUPPRESSION CONTRACTOR IN THE STATE OF TEXAS AND MEETING THE LATEST TEXAS INSURANCE CODE CHAPTER 6003 AND OTHER APPLICABLE NATIONAL, STATE AND CITY CODES, RULES AND REGULATIONS AS APPROPRIATE.

GENERAL NOTES:

1. BACKFLOW PREVENTERS SHALL BE AS PER CITY OF EDINBURG IN AN UNDERGROUND VAULT.
2. THE DRAWINGS CONTAINED HEREIN REGARDING FIRE LINES (DEDICATED TO SPRINKLER SYSTEMS) AND RELATED APPURTENANCES ARE SHOWN AS A GENERAL GUIDE TO THE REGISTERED FIRE SUPPRESSION, FIRE SPRINKLER SYSTEM AND SERVICE INSTALLATION CONTRACTOR. THE USE OF THE FACILITIES AND LOCAL BUILDING CODES WILL DETERMINE IF SPRINKLER SYSTEMS ARE REQUIRED. THE LOCATION(S) SHOWN FOR FIRE LINES AND RELATED APPURTENANCES ARE SHOWN ON THE PLANS AS A SCHEMATIC GUIDE AS RELATED AND INTERCONNECTED TO THE OVERALL UTILITY LINE LAYOUTS.

   ALL WORK RELATED TO THE INSTALLATION OF PRIVATE FIRE SERVICE MAINS, FIRE SUPPRESSION SYSTEMS AND RELATED APPURTENANCES ABOVE AND BELOW GROUND SHALL BE DESIGNED AND INSTALLED BY A REGISTERED FIRE SUPPRESSION CONTRACTOR IN THE STATE OF TEXAS AND MEETING THE LATEST TEXAS INSURANCE CODE CHAPTER 6003 AND OTHER APPLICABLE NATIONAL, STATE AND CITY CODES, RULES AND REGULATIONS AS APPROPRIATE.
3. THE PLANS CONTAIN THE APPROXIMATE LOCATION OF UTILITIES AS FURNISHED BY THE OWNER'S SURVEY AND MAPS. THE CONTRACTOR SHALL VERIFY THE LOCATION OF ALL EXISTING UTILITIES WHETHER PUBLIC OR PRIVATE IN THE FIELD PRIOR TO BEGINNING HIS WORK.
4. WHEN CONNECTING NEW LINES TO THE NEW OR EXISTING BUILDINGS, THE CONTRACTOR SHALL PROVIDE ALL NECESSARY FITTINGS, ADAPTORS, REDUCERS, ETC. TO PROVIDE A WATERTIGHT CONNECTION. GENERAL CONTRACTOR SHALL COORDINATE SHUTDOWN OF ANY UTILITY SERVICE TO ADJACENT BUILDINGS WITH OFPC VIA A FORMAL SHUT DOWN REQUEST.
5. REFER TO PLUMBING PLANS FOR BUILDING SERVICE STUB OUT CONNECTION LOCATIONS.
6. THE CONTRACTOR SHALL VERIFY INVERT ELEVATIONS OF ALL SANITARY SEWER AND STORM SEWER TIE-INS PRIOR TO CONSTRUCTION. ALL ELEVATIONS OBTAINED SHALL BE SUBMITTED TO THE ENGINEER PRIOR TO CONSTRUCTION. ALL LANDSCAPING DAMAGED SHALL BE REPLACED AS EXISTING.
7. ALL VALVE BOXES SHALL BE CAST IRON AND INCLUDE A 1' X 1' CONCRETE APRON AT FINISH GRADE.
8. IF EXISTING GAS LINES CONFLICT WITH NEW CONSTRUCTION, THESE LINES SHALL BE RELOCATED AS PER GAS COMPANY REQUIREMENTS, DIRECTION, AND SHALL BE RELOCATED TO SERVE EXISTING BUILDINGS. THE GAS COMPANY SHALL BE CONTACTED FOR COORDINATION OF THIS WORK.
9. CONTRACTOR SHALL REFER TO THE MEP, IRRIGATION,TELECOMUNICATIONS, FIRE PROTECTION AND LANDSCAPING PLANS TO AVOID UTILITY CONSTRUCTION CONFLICTS.
10. ALL WATER LINE FITTINGS SHALL BE DUCTILE IRON - SHORT BODY WITH MEG-A-LUG FITTINGS.
11. CONTRACTOR SHALL PREPARE AND SUBMIT HAUL ROUTE PLAN FOR APPROVAL PRIOR TO CONSTRUCTION.
12. CONTRACTOR IS RESPONSIBLE FOR PROVIDING DOMESTIC AND IRRIGATION WATER METERS AND MAINTAIN THE ACCOUNTS CURRENT WITH THE CITY OF EDINBURG UNTIL FINAL ACCEPTANCE OF THE PROJECT BY OWNER AND OFPC. THE CONTRACTOR SHALL THEN FORMALLY TRANSFER THE ACCOUNT TO UTRGV. METER AND BACKFLOW PREVENTER SHOP DRAWINGS AMD MATERIALS LIST SHALL BE SUBMITTED TO THE CITY OF EDINBURG FOR APPROVAL.
13. REFER TO GRADING & DRAINAGE PLANS FOR FINISH GRADES AND STORM SEWER ELEVATIONS.
14. AN ELECTRICAL EASEMENT WILL BE REQUIRED BY AEP FOR THE SERVICE LINE TO THE NEW BUILDING TRANSFORMER. CONTRACTOR SHALL NOTIFY OWNER AFTER TRENCH IS INSTALLED SO THAT OWNERS SURVEYOR CAN "AS-BUILT" THE LOCATION TO PREPARE THE EASEMENT.
15. CONTRACTOR IS RESPONSIBLE FOR OBTAINING PERMITS REQUIRED FOR WATER AND SANITARY SERVICE CONNECTIONS.
16. CONTRACTOR SHALL COORDINATE ALL WATER AND SANITARY SEWER WORK ALONG SCHUNIOR ROAD WITH THE CITY OF EDINBURG TO MINIMIZE INCONVENIENCE TO TRAFFIC WHEN MAKING UTILITY CONNECTIONS AND STREET TIE-INS. CONTRACTOR IS RESPONSIBLE FOR PREPARING AND SUBMITTING A TRAFFIC CONTROL PLAN TO THE CITY OF EDINBURG PRIOR TO CONSTRUCTION OF SANITARY SEWER CONNECTION.
17. WATER AND SANITARY SEWER SERVICE CONNECTIONS FROM PROPOSED BUILDINGS TO MAIN SHALL BE INSTALLED BY A MASTER PLUMBER AND FOLLOW ALL APPLICABLE BUILDING AND PLUMBING CODES.

LEGEND

- = NEW BUILDING
- = NEW SIDEWALK SECTION
- —W— = NEW WATERLINE
- —F— = NEW FIRELINE
- —SS— = NEW SANITARY SEWER
- = BM "X" CUT IN CONCRETE
- = SET NAIL
- = SET 1/2" ROD
- = ELECTRICAL BOX
- = FIRE HYDRANT
- = GRATE INLET
- = IRRIGATION CONTROL BOX
- = LIGHT POST
- = UTILITY MANHOLE
- = SIGN
- = WATER METER
- = WATER VALVE
- —W— = EXISTING WATERLINE
- —SS— = EXISTING SANITARY SEWER
- —FOC— = EXISTING FIBER OPTIC CABLE
- —T— = EXISTING TELEPHONE CABLE
- —ST— = EXISTING STORM SEWER LINE

muñoz & company
1017 NORTH MAIN SUITE 300
SAN ANTONIO, TEXAS 78212
O. 210.349.1163 F. 210.525.1038
W W W . M U N O Z - C O . C O M

PCE
Texas Registered Engineering Firm F-2158
808 Dallas Ave. McAllen, Texas 78501
(956) 631-4452

STATE OF TEXAS
J. DAVID PEREZ
89429
LICENSED
PROFESSIONAL ENGINEER
11-6-18

UTRGV
The University of Texas Rio Grande Valley

UNIVERSITY OF TEXAS RIO GRANDE VALLEY
SCHOOL OF MEDICINE
TEAM BASED LEARNING CENTER

PROJECT NO:903-1159
EDINBURG, TX

100% CONSTRUCTION DOCUMENTS

Issue/Revision

#	DESCRIPTION	DATE

Sheet Title
WATER/ WASTE WATER PLAN

Date
NOVEMBER 8, 2018

Project Number	Drawn By	Checked By
MUN18103	JH	DP

Sheet Number
C105

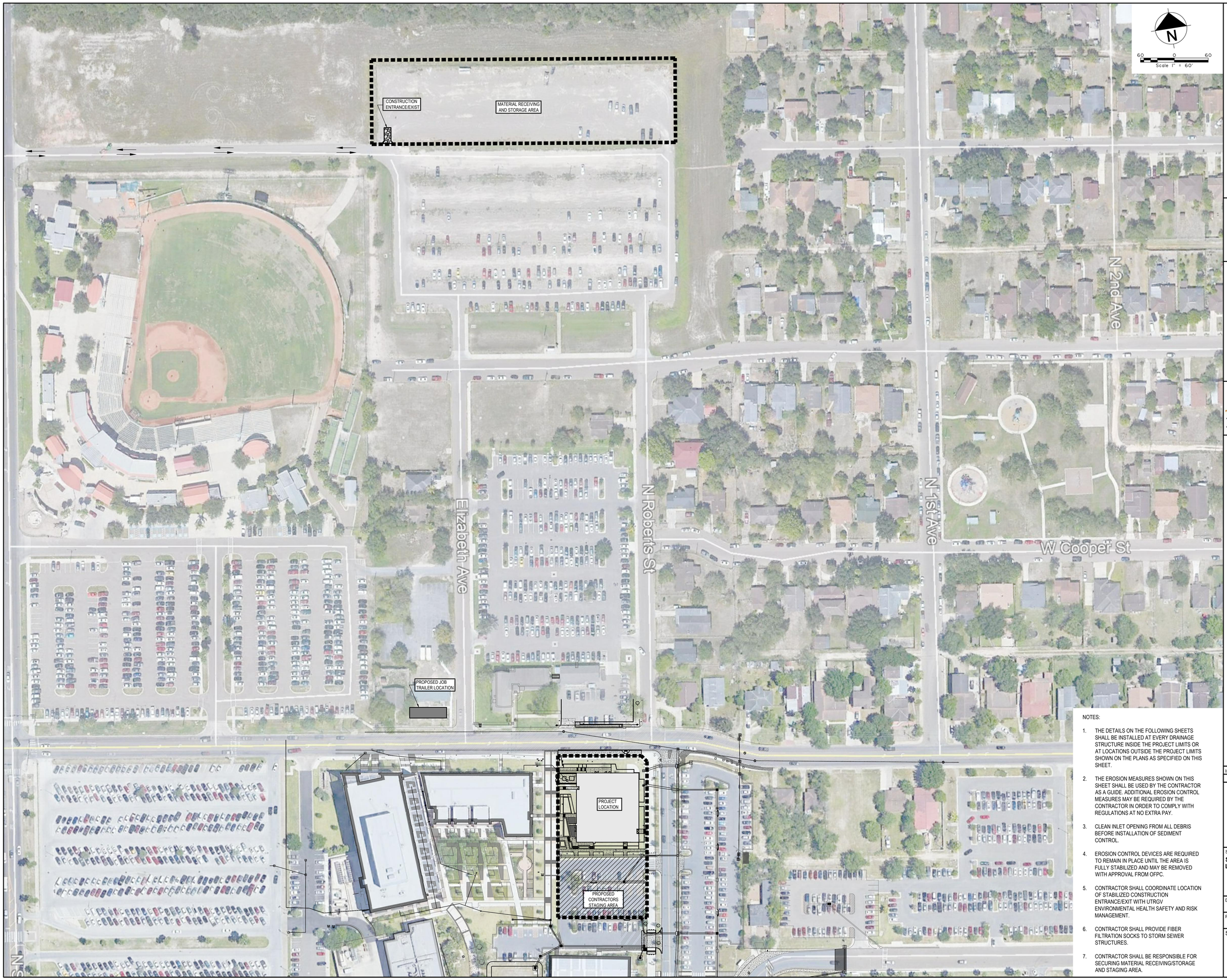

NOTES:

1. THE DETAILS ON THE FOLLOWING SHEETS SHALL BE INSTALLED AT EVERY DRAINAGE STRUCTURE INSIDE THE PROJECT LIMITS OR AT LOCATIONS OUTSIDE THE PROJECT LIMITS SHOWN ON THE PLANS AS SPECIFIED ON THIS SHEET.
2. THE EROSION MEASURES SHOWN ON THIS SHEET SHALL BE USED BY THE CONTRACTOR AS A GUIDE. ADDITIONAL EROSION CONTROL MEASURES MAY BE REQUIRED BY THE CONTRACTOR IN ORDER TO COMPLY WITH REGULATIONS AT NO EXTRA PAY.
3. CLEAN INLET OPENING FROM ALL DEBRIS BEFORE INSTALLATION OF SEDIMENT CONTROL.
4. EROSION CONTROL DEVICES ARE REQUIRED TO REMAIN IN PLACE UNTIL THE AREA IS FULLY STABILIZED AND MAY BE REMOVED WITH APPROVAL FROM OFPC.
5. CONTRACTOR SHALL COORDINATE LOCATION OF STABILIZED CONSTRUCTION ENTRANCE/EXIT WITH UTRGV ENVIRONMENTAL HEALTH SAFETY AND RISK MANAGEMENT.
6. CONTRACTOR SHALL PROVIDE FIBER FILTRATION SOCKS TO STORM SEWER STRUCTURES.
7. CONTRACTOR SHALL BE RESPONSIBLE FOR SECURING MATERIAL RECEIVING/STORAGE AND STAGING AREA.

muñoz & company
1017 NORTH MAIN SUITE 300
SAN ANTONIO, TEXAS 78212
O. 210.349.1169 F. 210.525.1038
WWW.MUNOZ-CO.COM

PCE
Texas Registered Engineering Firm F-2158
808 Dallas Ave. McAllen, Texas 78501
(956) 631-4482

UTRGV
The University of Texas Rio Grande Valley

UNIVERSITY OF TEXAS RIO GRANDE VALLEY

SCHOOL OF MEDICINE TEAM BASED LEARNING CENTER

PROJECT NO:903-1159
EDINBURG, TX

100% CONSTRUCTION DOCUMENTS

Issue/Revision

#	DESCRIPTION	DATE

Sheet Title
SITE AND LAYDOWN AREA LOCATION

Date
NOVEMBER 8, 2018

Project Number	Drawn By	Checked By
MUN18103	JH	DP

Sheet Number
C106

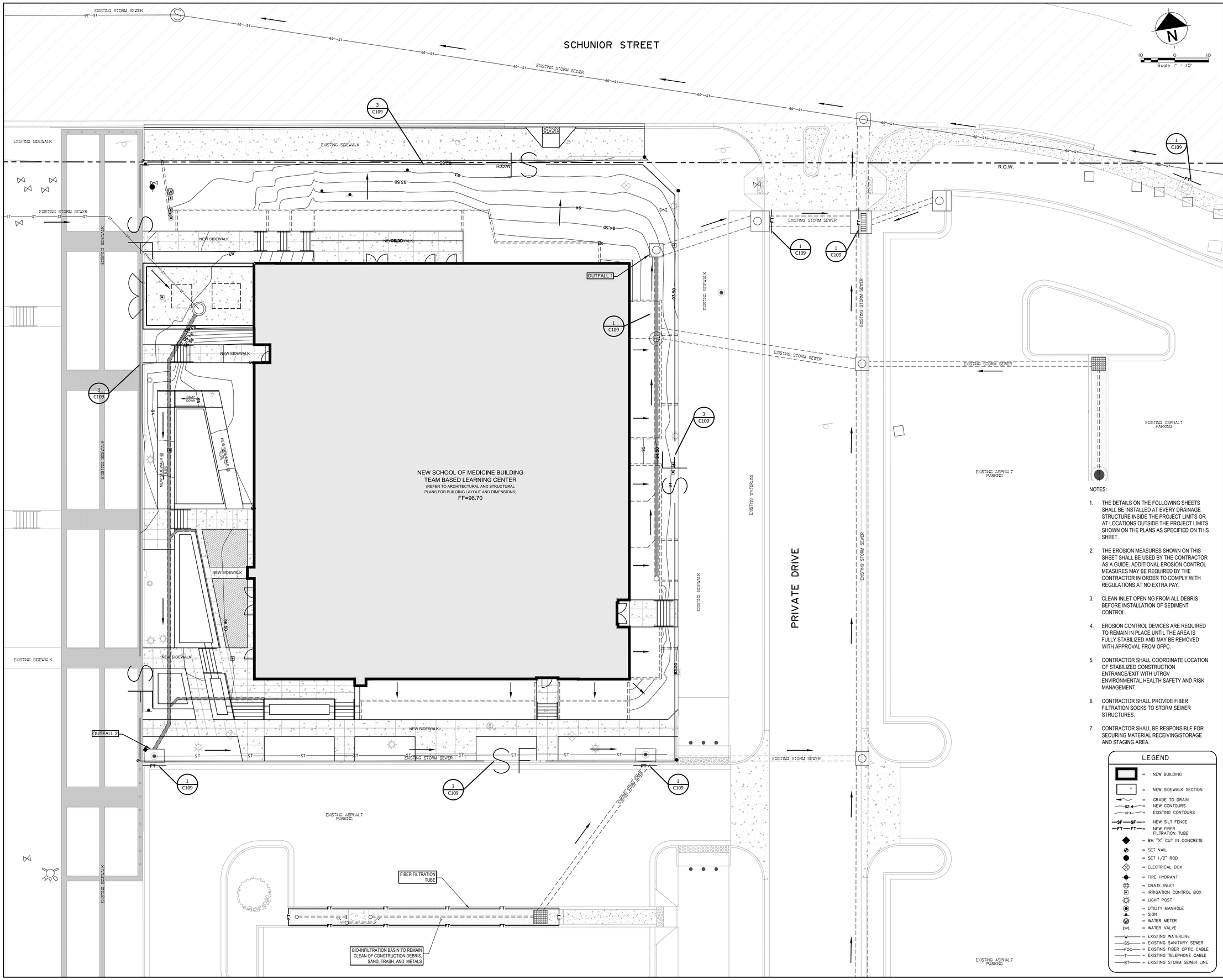

NOTES:

1. THE DETAILS ON THE FOLLOWING SHEETS SHALL BE INSTALLED AT EVERY DRAINAGE STRUCTURE INSIDE THE PROJECT LIMITS OR AT LOCATIONS OUTSIDE THE PROJECT LIMITS SHOWN ON THE PLANS AS SPECIFIED ON THIS SHEET.
2. THE EROSION MEASURES SHOWN ON THIS SHEET SHALL BE USED BY THE CONTRACTOR AS A GUIDE. ADDITIONAL EROSION CONTROL MEASURES MAY BE REQUIRED BY THE CONTRACTOR IN ORDER TO COMPLY WITH REGULATIONS AT NO EXTRA PAY.
3. CLEAN INLET OPENING FROM ALL DEBRIS BEFORE INSTALLATION OF SEDIMENT CONTROL.
4. EROSION CONTROL DEVICES ARE REQUIRED TO REMAIN IN PLACE UNTIL THE AREA IS FULLY STABILIZED AND MAY BE REMOVED WITH APPROVAL FROM OFPC.
5. CONTRACTOR SHALL COORDINATE LOCATION OF STABILIZED CONSTRUCTION ENTRANCE/EXIT WITH UTRGV ENVIRONMENTAL HEALTH SAFETY AND RISK MANAGEMENT.
6. CONTRACTOR SHALL PROVIDE FIBER FILTRATION SOCKS TO STORM SEWER STRUCTURES.
7. CONTRACTOR SHALL BE RESPONSIBLE FOR SECURING MATERIAL RECEIVING/STORAGE AND STAGING AREA.

LEGEND

- = NEW BUILDING
- = NEW SIDEWALK SECTION
- = GRADE TO DRAIN
- 92.4 = NEW CONTOURS
- 92.4 = EXISTING CONTOURS
- SF — SF = NEW SILT FENCE
- FT — FT = NEW FIBER FILTRATION TUBE
- = BM "X" CUT IN CONCRETE
- = SET NAIL
- = SET 1/2" ROD
- = ELECTRICAL BOX
- = FIRE HYDRANT
- = GRATE INLET
- = IRRIGATION CONTROL BOX
- = LIGHT POST
- = UTILITY MANHOLE
- = SIGN
- = WATER METER
- = WATER VALVE
- W = EXISTING WATERLINE
- SS = EXISTING SANITARY SEWER
- FOC = EXISTING FIBER OPTIC CABLE
- T = EXISTING TELEPHONE CABLE
- ST = EXISTING STORM SEWER LINE

muñoz & company
1017 NORTH MAIN SUITE 300
SAN ANTONIO, TEXAS 78212
O. 210.349.1163 F. 210.525.1038
W W W . M U N O Z - C O . C O M

PCE
Texas Registered Engineering Firm F-2158
808 Dallas Ave. McAllen, Texas 78501
(956) 631-4452

UTRGV
The University of Texas Rio Grande Valley

UNIVERSITY OF TEXAS RIO GRANDE VALLEY
SCHOOL OF MEDICINE
TEAM BASED LEARNING CENTER
PROJECT NO:903-1159
EDINBURG, TX
100% CONSTRUCTION DOCUMENTS

Issue/Revision

#	DESCRIPTION	DATE

Sheet Title
EROSION AND SEDIMENT CONTROL PLAN

Date
NOVEMBER 8, 2018

Project Number	Drawn By	Checked By
MUN18103	JH	DP

Sheet Number
C107

NOTES:

1. THE DETAILS ON THE FOLLOWING SHEETS SHALL BE INSTALLED AT EVERY DRAINAGE STRUCTURE INSIDE THE PROJECT LIMITS OR AT LOCATIONS OUTSIDE THE PROJECT LIMITS SHOWN ON THE PLANS AS SPECIFIED ON THIS SHEET.
2. THE EROSION MEASURES SHOWN ON THIS SHEET SHALL BE USED BY THE CONTRACTOR AS A GUIDE. ADDITIONAL EROSION CONTROL MEASURES MAY BE REQUIRED BY THE CONTRACTOR IN ORDER TO COMPLY WITH REGULATIONS AT NO EXTRA PAY.
3. CLEAN INLET OPENING FROM ALL DEBRIS BEFORE INSTALLATION OF SEDIMENT CONTROL.
4. EROSION CONTROL DEVICES ARE REQUIRED TO REMAIN IN PLACE UNTIL THE AREA IS FULLY STABILIZED AND MAY BE REMOVED WITH APPROVAL FROM OFPC.
5. CONTRACTOR SHALL COORDINATE LOCATION OF STABILIZED CONSTRUCTION ENTRANCE/EXIT WITH UTRGV ENVIRONMENTAL HEALTH SAFETY AND RISK MANAGEMENT.
6. CONTRACTOR SHALL PROVIDE FIBER FILTRATION SOCKS TO STORM SEWER STRUCTURES.
7. CONTRACTOR SHALL BE RESPONSIBLE FOR SECURING MATERIAL RECEIVING/STORAGE AND STAGING AREA.

muñoz & company
1017 NORTH MAIN SUITE 300
SAN ANTONIO, TEXAS 78212
O. 210.349.1169 F. 210.525.1038
W W W . M U N O Z - C O . C O M

PCE
Texas Registered Engineering Firm F-2158
808 Dallas Ave. McAllen, Texas 78501
(956) 631-4452

UTRGV
The University of Texas Rio Grande Valley

UNIVERSITY OF TEXAS RIO GRANDE VALLEY
SCHOOL OF MEDICINE
TEAM BASED LEARNING CENTER
PROJECT NO:903-1159
EDINBURG, TX
100% CONSTRUCTION DOCUMENTS

Issue/Revision

#	DESCRIPTION	DATE

Sheet Title
MATERIAL RECEIVING AND STORAGE AREA SITE PLAN

Date
NOVEMBER 8, 2018

Project Number	Drawn By	Checked By
MUN18103	JH	DP

Sheet Number
C108

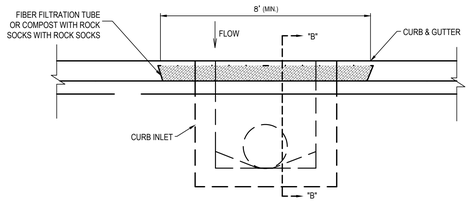

CURB & GUTTER PLAN VIEW

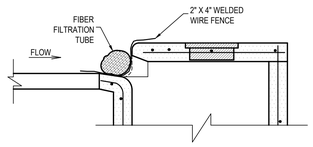

SECTION "B-B"

CURB INLET PROTECTION NOTES:

1. WHERE MINIMUM CLEARANCES CAUSE TRAFFIC TO DRIVE IN THE GUTTER, USE 1" X 4" LUMBER SECURED WITH CONCRETE NAILS 3' O.C. NAILED INTO THE CONCRETE. IF PEDESTRIAN TRAFFIC ONLY, THE USE OF 20# GRAVEL BAGS TO SECURE MATERIAL IS PERMITTED.

2. AS SECTION OF FILTER FABRIC SHALL BE REMOVED AS SHOWN IN THIS DETAIL. FABRIC MUST BE SECURED TO WIRE BACKING WITH CLIPS OR HOG RINGS AT THIS LOCATION.

3. DAILY INSPECTION SHALL BE MADE AND SILT ACCUMULATION MUST BE REMOVED WHEN DEPTH REACHES 2-INCHES.

4. THE PERFORMANCE OF THE INLET PROTECTION SHALL BE MONITORED DURING EACH RAINFALL EVENT AND PROTECTION SHALL BE IMMEDIATELY REMOVED IF THE STORM WATER BEGINS TO OVERTOP THE CURB.

5. INLET PROTECTION SHALL BE REMOVED AS SOON AS THE SOURCE OF SEDIMENT IS STABILIZED.

1 TEMPORARY CURB PROTECTION DETAIL

NOT TO SCALE

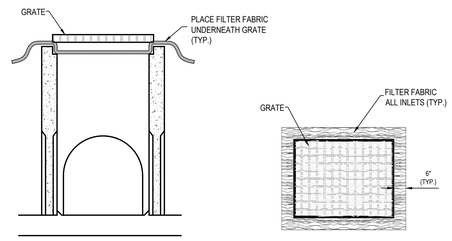

INLET DETAIL

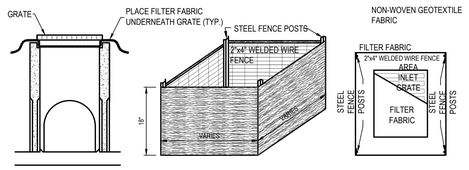

DETAIL NOTES:

1. STEEL POSTS THAT SUPPORT THE SILT FENCE SHALL BE INSTALLED AT EACH CORNER AND IN BETWEEN CORNERS IF THE DISTANCE IS GREATER THAN 6' BETWEEN CORNER POSTS.

2. USE SILT FENCE DETAIL FOR INSTALLATION OF THE SILT FENCE AROUND THE EXISTING OR NEW AREA INLET.

3. THE METAL AREA INLET GRATE SHALL BE LIFTED AND FILTER FABRIC WRAPPED AROUND THE GRATE AND THE GRATE SHALL BE REPLACED.

4. IN VEHICULAR TRAFFIC AREAS METAL GRATE SHALL BE LIFTED OUT AND WIRE FENCE MATERIAL SHALL BE PLACED UNDER IT WITH FILTER FABRIC PLACED BETWEEN THE GRATE AND THE WIRE FENCE. THE WIRE FENCE SHALL THEN BE ATTACHED TO THE GRATE.

5. ACCUMULATED SILT SHALL BE REMOVED WHEN THE FILTER FABRIC OVER THE GRATE COMPLETELY COVERS THE GRATE AREA, AND THE SILT AROUND THE SILT FENCE REACHES A HEIGHT OF 6"

6. AREA INLET PROTECTION SHALL BE REMOVED WHEN THE SITE IS COMPLETELY STABILIZED.

2 TEMPORARY INLET PROTECTION DETAIL

NOT TO SCALE

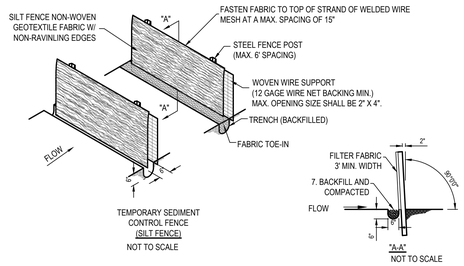

DETAIL NOTES:

1. STEEL POSTS WHICH SUPPORT THE SILT FENCE SHALL BE INSTALLED ON A SLIGHT ANGLE TOWARD THE ANTICIPATED RUNOFF SOURCE. POSTS MUST BE EMBEDDED A MINIMUM OF 12".

2. THE TOE OF THE SILT FENCE SHALL BE TRENCHED IN WITH A SPADE OR MECHANICAL TRENCHER, SO THAT THE DOWNSLOPE FACE OF THE TRENCH IS FLAT AND PERPENDICULAR TO THE LINE OF THE FLOW. WHERE FENCE CAN NOT BE TRENCHED INTO THE SURFACE (e.g. PAVEMENT) THE FABRIC SHALL BE WEIGHTED DOWN WITH ROCK OR 1" X 4" LUMBER SECURELY FASTENED TO THE SURFACE, ON THE UPSTREAM SIDE TO PREVENT FLOW UNDER THE FENCE.

3. THE TRENCH MUST BE A MINIMUM OF 6" DEEP AND 6" WIDE TO ALLOW FOR THE FILTER FABRIC TO BE LAID IN THE GROUND AND BACKFILLED WITH COMPACTED MATERIAL.

4. THE FILTER FABRIC SHALL BE SECURELY FASTENED TO THE WOVEN WIRE BACKING, WHICH IN TURN IS SECURELY FASTENED TO THE STEEL FENCE POST.

5. ACCUMULATED SILT SHALL BE REMOVED WHEN IT REACHES A DEPTH OF 6". THE SILT SHALL BE DISPOSED OF ON AN APPROVED SITE AND IN SUCH A MANNER THAT IT WILL NOT CONTRIBUTE TO ADDITIONAL FILTRATION.

6. INSPECTION SHALL BE MADE WEEKLY AND REPAIR OR REPLACEMENT SHALL BE MADE PROMPTLY, IF NEEDED.

7. SILT FENCE SHALL BE REMOVED WHEN THE SITE IS COMPLETELY STABILIZED.

3 TEMPORARY SEDIMENT CONTROL FENCE (SILT FENCE) DETAIL

NOT TO SCALE

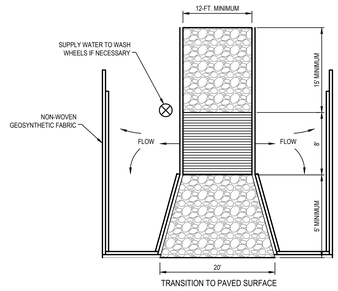

DETAIL NOTES:
A STEEL GRID THAT ALLOWS THE SAFE PASSAGE OF VEHICLES WHILE AGITATING THE TIRES TO LOOSEN AND REMOVE THE SOIL BUILD UP. THE GRID OR STRUCTURES SHALL CONFORM TO THE FOLLOWING:

A. IT SHALL CONSIST OF PIPES OR TUBES SPACED SUCH THAT THERE IS A MINIMUM CLEAR DISTANCE BETWEEN THE PIPES OR TUBES OF 4-1/2". IT SHALL BE ELEVATED ABOVE THE GROUND SURFACE A MINIMUM OF 8" TO ALLOW WATER, DEBRIS, AND SOIL TO DRAIN.

B. MINIMUM DIAMETER OF PIPE OR TUBE SHALL BE 3".

C. IT SHALL BE DESIGNED TO SUPPORT ANY AND ALL VEHICLES ENTERING AND LEAVING THE CONSTRUCTION SITE.

D. IT SHALL BE FIRMLY PLACED IN THE GROUND AT THE EXIT.

E. IT SHALL BE OF SUFFICIENT LENGTH SO THAT THE AGITATION WILL REMOVE THE SOIL FROM THE TIRES OR A MINIMUM OF 8'-0".

F. AT THE "STREET SIDE" APPROACH OF THE GRID THERE SHALL BE AN IMPERVIOUS SURFACE OR IT SHALL CONSIST OF 3" TO 5" DIAMETER ANGULAR CRUSHED STONE/ROCK APPROXIMATELY 5'-0" IN LENGTH, MINIMUM, AND 8" DEEP, MINIMUM. ON THE "JOB SITE" SIDE OF THE GRID, THERE SHALL BE 3" TO 5" DIAMETER ANGULAR CRUSHED STONE/ROCK 15'-0" IN LENGTH, MINIMUM, 8" DEEP, MINIMUM. THE STEEL GRID WILL BE BETWEEN THE "STREET SIDE" APPROACH AND THE JOB SITE CRUSHED STONE/ROCK. ALL CRUSHED STONE/ROCK SHALL HAVE FILTER FABRIC BENEATH THE STONE/ROCK.

G. STEEL GRID AREA SHALL BE USED AS THE TIRE WASH AREA. WHEN THE TIRE WASH IS IN USE (RAINY OR MUDDY DAYS) THE AREA SHALL BE MANNED AND THE TIRES SHALL BE WASHED USING A HIGH PRESSURE HOSE/NOZLE.

H. THE AREA BENEATH THE GRID SHALL BE SLOPED SUCH THAT DEBRIS, SOIL, AND WATER SHALL BE DIVERTED BACK ON TO THE CONSTRUCTION SITE OR TO A SEDIMENT BASIN. NO WATER, SOIL, OR DEBRIS SHALL LEAVE THE CONSTRUCTION SITE. THE RESULTING DISCHARGE SHALL BE DISPOSED OF PROPERLY.

4 STABILIZED CONSTRUCTION ENTRANCE/EXIT

NOT TO SCALE

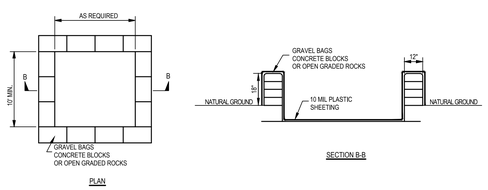

ALTERNATIVE SELF-INSTALLED CONSTRUCTION SITE CONCRETE TRUCK WASHOUT

1. THE EXCAVATION FOR THE CONCRETE/PAINT AND STUCCO TRUCK WASHOUT SHALL BE A MINIMUM OF 10' WIDE AND OF SUFFICIENT LENGTH AND DEPTH TO ACCOMMODATE 7 GALLONS OF WASHOUT WATER AND CONCRETE PER TRUCK PER DAY AND/OR 50 GALLONS OF WASHOUT WATER AND CONCRETE PER PUMP TRUCK PER DAY.

2. IN THE EVENT THAT THE SELF-INSTALLED CONCRETE/PAINT AND STUCCO TRUCK WASHOUT IS CONSTRUCTED ABOVE GROUND, IT SHALL BE 10' WIDE AND 10' LONG WITH THE SAME REQUIREMENTS FOR CONTAINMENT AS DESCRIBED IN ITEM 1.

3. THE CONTAINMENT AREA SHALL BE LINED WITH 10 MIL PLASTIC SHEETING, WITHOUT HOLES OR TEARS. WHERE THERE ARE SEAMS, THESE SHALL BE SECURED ACCORDING TO THE MANUFACTURERS DIRECTIONS.

4. THE PLASTIC SHEETING SHALL BE OF SUFFICIENT SIZE SO THAT IT WILL OVERLAP THE TOP OF THE CONTAINMENT AREA AND BE WRAPPED AROUND THE GRAVEL BAGS, CONCRETE BLOCKS OR OPEN GRADED ROCK AT LEAST 2 TIMES.

5. THE GRAVEL BAGS OR CONCRETE BLOCKS SHALL BE PLACED ABUTTING EACH OTHER TO FORM A CONTINUOUS BERM AROUND THE OUTER PERIMETER OF THE CONTAINMENT AREA.

6. THE BERM CONSISTING OF GRAVEL BAGS, CONCRETE BLOCKS OR OPEN GRADED ROCK SHALL BE NO LESS THAT 18" HIGH AND NO LESS THAN 12" WIDE.

7. THE CONTAINMENT AREA SHALL NO EXCEED 50% OF CAPACITY AT ANY ONE TIME.

8. SOLIDS SHALL BE REMOVED FROM CONTAINMENT AREA AND DISPOSED OF PROPERLY AND ANY DAMAGE TO THE PLASTIC SHEETING SHALL BE REPAIRED OR SHEETING REPLACED BEFORE NEXT USE.

5 CONCRETE/PAINT AND STUCCO WASHOUT DETAIL

NOT TO SCALE

muñoz & company
1017 NORTH MAIN SUITE 300
SAN ANTONIO, TEXAS 78212
O. 210.349.1169 F. 210.525.1038
W W W . M U N O Z - C O . C O M

PCE
Texas Registered Engineering Firm F-2158
808 Dallas Ave. McAllen, Texas 78501
(956) 631-4452

UTRGV
The University of Texas Rio Grande Valley

UNIVERSITY OF TEXAS RIO GRANDE VALLEY
SCHOOL OF MEDICINE
TEAM BASED LEARNING CENTER
PROJECT NO:903-1159
EDINBURG, TX
100% CONSTRUCTION DOCUMENTS

Issue/Revision

#	DESCRIPTION	DATE

Sheet Title
EROSION AND SEDIMENT CONTROL DETAILS

Date
NOVEMBER 8, 2018

Project Number	Drawn By	Checked By
MUN18103	JH	DP

Sheet Number
C109

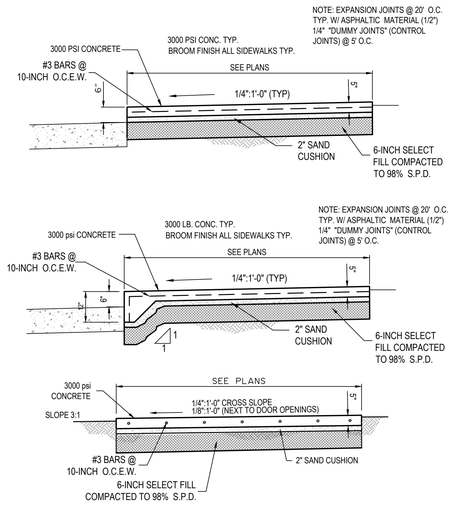

NOTES:
1. EXPANSION JOINTS @ 20' O.C. TYP. W/ ASPHALTIC MATERIAL (1/2") 1/4" "DUMMY JOINTS" (CONTROL JOINTS) @ 5' O.C.
2. 3000 LB. CONC. TYP.
3. BROOM FINISH ALL SIDEWALKS TYP.

1 SIDEWALK DETAILS
NOT TO SCALE

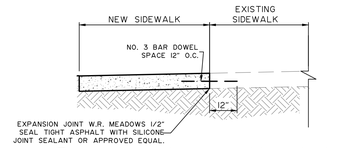

2 EXISTING SIDEWALK CONNECTION
NOT TO SCALE

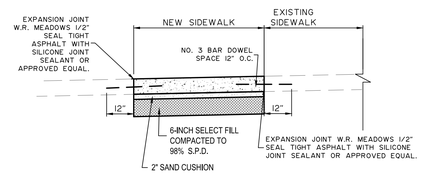

3 SIDEWALK REPAIR DETAIL
NOT TO SCALE

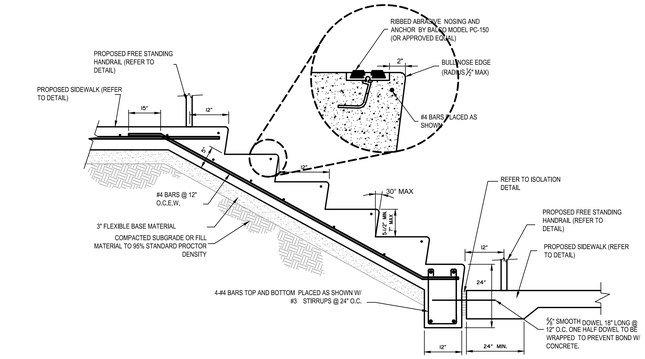

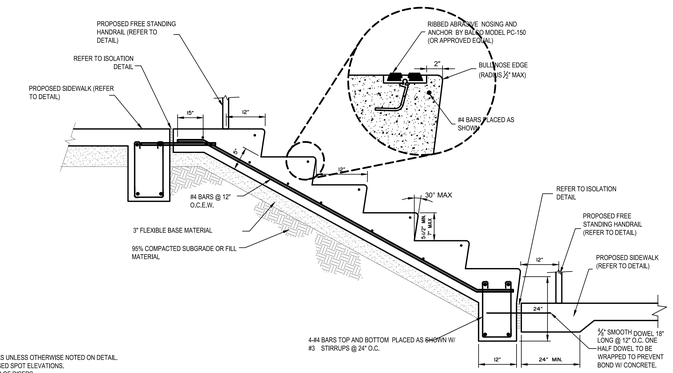

NOTE:
1. FOLLOW GENERAL NOTES FOR SIDEWALKS UNLESS OTHERWISE NOTED ON DETAIL.
2. REFERENCE GRADING PLAN FOR PROPOSED SPOT ELEVATIONS.
3. REFERENCE GRADING PLAN FOR NUMBER OF RISERS.
4. IF 2 OR MORE RISERS, PROVIDE ADJACENT HANDRAILS. EXTEND HANDRAILS 1' BEYOND LIMITS OF RISERS AS SHOWN ON PLAN. SEE HANDRAIL DETAIL, SHEET C107.

4 TYPICAL CONCRETE STEP DETAIL
NOT TO SCALE

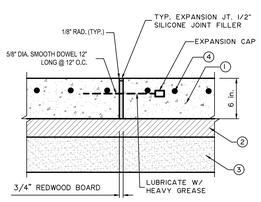

EXPANSION JOINT TYPE "A"

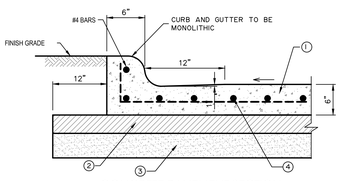

CONCRETE PAVEMENT SECTION

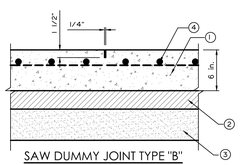

SAW DUMMY JOINT TYPE "B"

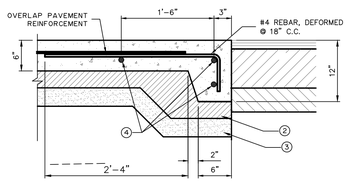

PAVEMENT TERMINATION DETAIL

KEYED NOTES:

1. PROPOSED 6 INCHES REINFORCED CONCRETE PAVEMENT WITH A MINIMUM 28 DAY COMPRESSIVE STRENGHT OF 3500 P.S.I. MATERIALS AND PROPERTIES SHALL MEET APPLICABLE REQUIREMENTS IN THE ACI MANUAL OF CONCRETE PRACTICE.
2. PROPOSED 4 INCHES CALICHE TREATED GRAVEL FLEXIBLE BASE MATERIAL COMPOSED OF CRUSHED OR UNCRUSHED GRAVEL TYPES B OR C GRADES 1-3 ITEM 247 (2014 TxDOT STANDARD SPECIFICATIONS) COMPACTED TO 98 PERCENT OF THE MAXIMUM DRY DENSITY AS DETERMINED BY MODIFIED MOISTURE-DENSITY RELATIONSHIP (A.S.T.M. 1557) AT MOISTURE CONTENT WITHIN 2 PERCENT OF OPTIMUM MOISTURE.
3. 6 INCHES OF COMPACTED STABILIZED SUBGRADE TREATED WITH 4 PERCENT LIME IN ACCORDANCE TO ITEM 260 (2004 TxDOT STANDARD SPECIFICATIONS) COMPACTED TO 95 PERCENT OF THE STANDARD EFFORT (ASTM D548) MAXIMUM DRY DENSITY WITHIN 2 PERCENT OF THE OPTIMUM MOISTURE CONTENT.
4. REINFORCEMENT SHALL CONSIST OF THE FOLLOWING: NUMBER 4 BARS SPACED AT 12 INCHES ON CENTER IN BOTH DIRECTIONS
5. EXPANSION SILICONE JOINT FILLER/SEALER.
6. 80 MM TRAFFIC RATED CONCRETE PAVERS BY INOVATIVE BLOCK OR APPROVED EQUAL.
7. JOINT SAND FILLER MATERIAL AS PER MANUFACTURER'S RECOMMENDATIONS AND TO CONFORM TO GRADING REQUIREMENTS OF ASTM C 144.
8. 1 TO 1½ INCH BEDDING SAND MATERIAL CONFORMING WITH GRADING REQUIREMENTS OF ASTM C 33.
9. 8 INCH WIDE PRECAST FIBER REINFORCED POLYMER BODY TRENCH DRAIN SYSTEM WITH HEAVY DUTY STEEL FRAME AND TRAFFIC RATED ADA APPROVED 10 INCH WIDE DUCTILE IRON GRATE BY DURATRENCH (MODEL DTPF-0.5-10C24CI-HDP). OR APPROVED EQUAL

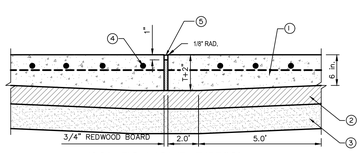

ISOLATION JOINT - TYPE "C"

SPACING OF CONTROL JOINTS IN FEET

SLAB THICKNESS, IN.	SLUMP 4 TO 6 IN. MAXIMUM-SIZE AGGREGATE LESS THAN 3/4 IN.	SLUMP 4 TO 6 IN. MAXIMUM-SIZE AGGREGATE 3/4 IN. AND LARGER	SLUMP LESS THAN 4 IN.
5	10	12.5	15
6	12	15	18
7	14	18	21
8	16	20	24
9	18	23	27
10	20	25	30

5 TYPICAL REINFORCED CONCRETE PAVEMENT SECTION & JOINT DETAILS
NOT TO SCALE

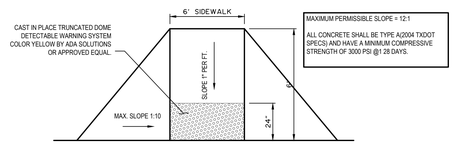

MAXIMUM PERMISSIBLE SLOPE = 12:1

ALL CONCRETE SHALL BE TYPE A(2004 TXDOT SPECS) AND HAVE A MINIMUM COMPRESSIVE STRENGTH OF 3000 PSI @1 28 DAYS.

SIDEWALK RAMP ALONG CURB DETAIL

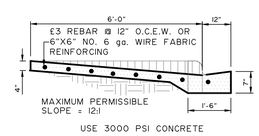

SECTION VIEW
NOT TO SCALE

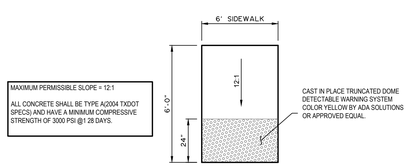

MAXIMUM PERMISSIBLE SLOPE = 12:1

ALL CONCRETE SHALL BE TYPE A(2004 TXDOT SPECS) AND HAVE A MINIMUM COMPRESSIVE STRENGTH OF 3000 PSI @1 28 DAYS.

SIDEWALK RAMP

6 SIDEWALK RAMP DETAILS
NOT TO SCALE

NOTE:
1. RAMPS SHALL BE GROOVED 1/4" DEEP, 3/4" WIDE AND 2" APART. COLOR PIGMENTATION SHALL BE ADDED TO THE CONCRETE AS COLOR CONTRASTING AGENT, "MALAYAN BUFF", OF DIRECT COLORS OR APPROVED EQUAL SHALL BE UTILIZED. ALL AS PER TEXAS ACCESSIBILITY STANDARDS (T.A.S.).
2. MAXIMUM PERMISSIBLE SLOPE = 12:1
3. USE 3000 PSI CONCRETE

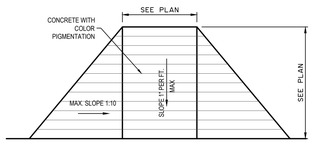

SIDEWALK RAMP

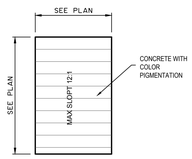

SIDEWALK RAMP

7 RAMP DETAILS
NOT TO SCALE

muñoz & company
1017 NORTH MAIN SUITE 300
SAN ANTONIO, TEXAS 78212
O. 210.319.1163 F. 210.525.1038
WWW.MUNOZ-CO.COM

PCE
Texas Registered Engineering Firm F-2158
808 Dallas Ave. McAllen, Texas 78501
(956) 631-4452

STATE OF TEXAS
J. DAVID PEREZ
89429
LICENSED
PROFESSIONAL ENGINEER
11-6-18

UTRGV
The University of Texas Rio Grande Valley

UNIVERSITY OF TEXAS RIO GRANDE VALLEY
SCHOOL OF MEDICINE
TEAM BASED LEARNING CENTER
PROJECT NO:903-1159
EDINBURG, TX
100% CONSTRUCTION DOCUMENTS

Issue/Revision

#	DESCRIPTION	DATE

Sheet Title
TYPICAL DETAIL

Date
NOVEMBER 8, 2018

Project Number	Drawn By	Checked By
MUN18103	JH	DP

Sheet Number
C110

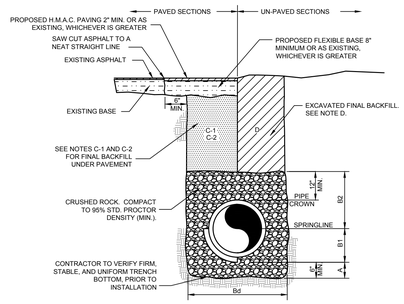

GENERAL NOTES:

A. BEDDING - USE CLASS IA, IB, II OR III MATERIAL AS SPECIFIED BY ASTM D2321. INSTALL AND COMPACT IN 6-INCH MAXIMUM LAYERS. LEVEL FINAL GRADE BY HAND BEFORE PIPE IS LAID. BEDDING MINIMUM DEPTH OF 4-INCHES.

B1. HAUNCH ZONE - USE CLASS IA, IB, II OR III MATERIAL AS SPECIFIED BY ASTM D2321. INSTALL AND COMPACT IN 6-INCH MAXIMUM LAYERS. WORK IN AROUND THE PIPE BY HAND. WORK IN UNDER PIPE HAUNCHES AND COMPACT BY HAND TO SPRING LINE TO PROVIDE UNIFORM SUPPORT.

B2. INITIAL BACKFILL - USE CLASS IA, IB, II OR III MATERIAL AS SPECIFIED BY ASTM D2321. INSTALL AND COMPACT IN 6-INCH MAXIMUM LAYERS UP TO 12 INCHES ABOVE PIPE CROWN.

Bd. MINIMUM TRENCH WIDTH: PIPE O.D. + 16" (FOR 16" PIPE AND SMALLER); PIPE O.D. X 1.25 + 12" (FOR 18" PIPE AND LARGER)

C-1. (CITY STREETS, PARKING AREA, AND DRIVEWAYS) SELECT EXCAVATED BACKFILL MECHANICALLY COMPACTED TO 95% STANDARD PROCTOR DENSITY IN 8" MAX. LIFTS.

C-2 (STATE MAINTAINED ROADWAY) SAND/CEMENT STABILIZED FINAL BACKFILL WITH 7% PORTLAND CEMENT COMPACTED TO 95% STANDARD PROCTOR DENSITY.

D. EXCAVATED EARTH FINAL BACKFILL MECHANICALLY COMPACTED IN 12" MAX. LIFTS. MINIMUM STANDARD PROCTOR DENSITY: 90% OUTSIDE RIGHT OF WAY; 95% INSIDE RIGHT OF WAY

EMBEDMENT SHALL BE IN ACCORDANCE WITH REQUIREMENTS OF ASTM D 2321.

IN SATURATED OR UNSTABLE SOILS, EMBEDMENT SHALL BE CLASS 1B ONLY (SEE SPECIFICATIONS FOR GRADATION REQUIREMENTS).

WHERE THIS STANDARD CONFLICTS WITH THE RECOMMENDATION OF ANY GEOTECHNICAL REPORT, OBTAIN WRITTEN CLARIFICATION FROM THE UTILITY ENGINEER PRIOR TO CONSTRUCTION.

FOUNDATION PREPARATION USING COBBLES, GRAVEL, CEMENT STABILIZATION, OR OTHER METHODS AS APPROVED BY THE ENGINEER SHALL BE REQUIRED WHEN TRENCH BOTTOM IS UNSTABLE.

BACKFILLING AT STRUCTURES SHALL BE PLACED IN UNIFORM LAYERS, AND COMPACTED TO 95% STANDARD PROCTOR DENSITY IN 6" MAXIMUM LIFTS. STRUCTURE BACKFILL MATERIAL SHALL BE SAND.

1 POLYPROPYLENE DUALWALL STORM DRAINAGE PIPE HP STORM PIPE BY ADA

NOT TO SCALE

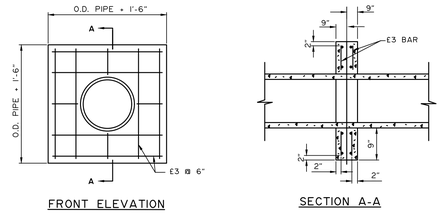

2 CONCRETE PIPE COLLAR DETAIL

NOT TO SCALE

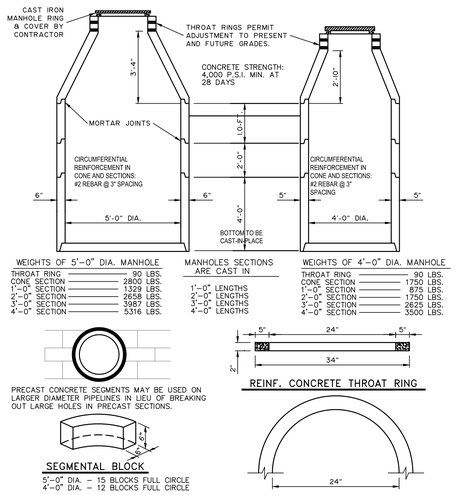

3 CITY OF EDINBURG - CIRCULAR CONCRETE MANHOLE DETAILS

NOT TO SCALE

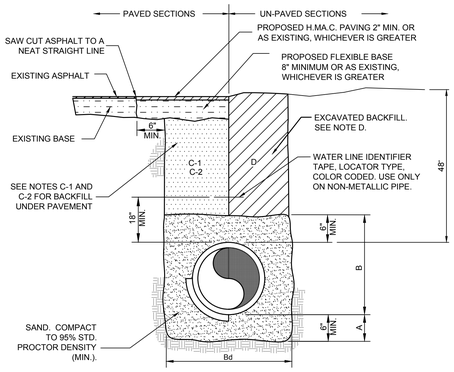

GENERAL NOTES:

A. SAND BEDDING PLACED, HAND LEVELED, AND COMPACTED BEFORE PIPE IS LAID, UP TO BOTTOM OF PIPE (MIN. THICKNESS = 6").

B. SAND BACKFILL PLACED AND COMPACTED AFTER PIPE IS LAID, FROM BOTTOM OF PIPE TO 6" ABOVE THE TOP OF PIPE. WORK IN UNDER PIPE HAUNCHES AND COMPACT BY HAND TO SPRING LINE. USE VIBRATORY-TYPE COMPACTORS FOR LIFTS ABOVE THE SPRING LINE. MAXIMUM 6" LIFTS.

Bd. MINIMUM TRENCH WIDTH: PIPE O.D. + 16" (FOR 16" PIPE AND SMALLER) OR PIPE O.D. X 1.25 + 12" (FOR 18" PIPE AND LARGER)

C-1. (CITY STREETS, PARKING AREA, AND DRIVEWAYS) SELECT EXCAVATED BACKFILL MECHANICALLY COMPACTED TO 95% STANDARD PROCTOR DENSITY IN 8" MAX. LIFTS.

C-2 (STATE MAINTAINED ROADWAY) SAND/CEMENT STABILIZED BACKFILL WITH 7% PORTLAND CEMENT COMPACTED TO 95% STANDARD PROCTOR DENSITY.

D. EXCAVATED EARTH BACKFILL MECHANICALLY COMPACTED IN 12" MAX. LIFTS. MINIMUM STANDARD PROCTOR DENSITY: 90% OUTSIDE RIGHT OF WAY; 95% INSIDE RIGHT OF WAY

EMBEDMENT SHALL BE IN ACCORDANCE WITH THE REQUIREMENTS OF ASTM D 2321. EMBEDMENT MATERIAL SHALL BE CLASS II OR III WITH < 50% PASSING A No. 200 SIEVE AND PLASTICITY INDEX < 7.

WHERE THIS STANDARD CONFLICTS WITH THE RECOMMENDATION OF ANY GEOTECHNICAL REPORT, OBTAIN WRITTEN CLARIFICATION FROM THE UTILITY ENGINEER PRIOR TO CONSTRUCTION.

FOUNDATION PREPARATION USING COBBLES, GRAVEL, CEMENT STABILIZATION, OR OTHER METHODS AS DIRECTED BY THE ENGINEER SHALL BE REQUIRED WHEN TRENCH BOTTOM IS UNSTABLE.

BACKFILLING AT STRUCTURES SHALL BE PLACED IN UNIFORM LAYERS, AND COMPACTED TO 95% STANDARD PROCTOR DENSITY IN 6" MAXIMUM LIFTS. STRUCTURE BACKFILL MATERIAL SHALL BE SAND.

4 WATERLINE BEDDING DETAIL

NOT TO SCALE

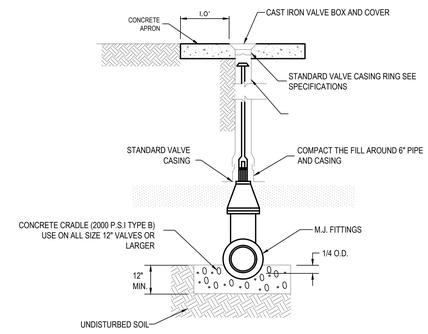

5 TYPICAL GATE VALVE DETAIL

NOT TO SCALE

NOTES:
1. THRUST BLOCK AREAS SHOWN ARE BASE ON TEST PRESSURES OF 150 P.S.I. FOR 6"-12" PIPE AND 200 P.S.I. FOR 14"-16" PIPE AND SOIL BEARING PRESSURE OF 1000 PSF.

2. MINIMUM AREAS SHOWN ARE IN SQUARE FEET.

3. BEARING MUST BE ON UNDISTURBED EARTH.

4. ADJUST THRUST BLOCK AREAS ACCORDINGLY IF PRESSURES AND/OR SOIL BEARING VALUE VARIES.

5. THRUST BLOCKING TO BE PLACED AT ALL DEAD ENDS AND TEES. AT ALL BENDS, AND OTHER AREAS WHICH MAY REQUIRE THRUST RESISTANCE AS APPROVED BY THE ENGINEER.

6. USE 3000 PSI CONCRETE.

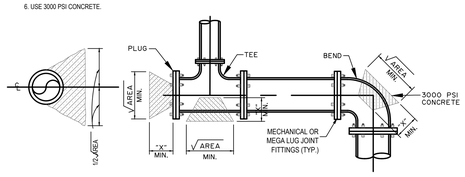

"X" DIMENSION MAY VARY TO PROVIDE REQ'D BEARING AGAINST UNDISTURBED EARTH.

HORIZONTAL BLOCKING TABLE

PIPE SIZE (IN)	BEARING AREA OF BLOCK IN SQUARE FEET						
	DEAD END AND TEE	90° BEND	45° BEND	22.5° BEND	11.25° BEND	5° BEND	"X"-DIM FT.
6	4.24	6.00	3.25	1.65	0.83	0.37	1.00
8	7.54	10.66	5.77	2.94	1.48	0.66	1.00
10	11.78	16.66	9.02	4.60	2.31	1.03	1.25
12	16.96	23.99	12.98	6.62	3.33	1.48	1.25
14	30.79	43.54	23.56	12.01	6.04	2.69	1.50
16	40.20	56.87	30.78	15.69	7.88	3.51	1.75

6 CONCRETE THRUST BLOCK DETAIL

NOT TO SCALE

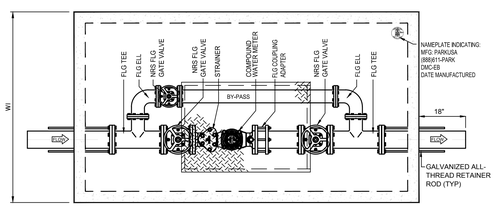

MODEL	SIZE	BY PASS	L1	W1	H1	SL	WEIGHT LBS
DMC-EB3	3"	2"	8'-8"	5'-0"	4'-6"	20"	12,000
DMC-EB4	4"	2"	8'-8"	5'-0"	4'-6"	20"	12,000
DMC-EB6	6"	3"	11'-0"	6'-0"	5'-0"	24"	18,000

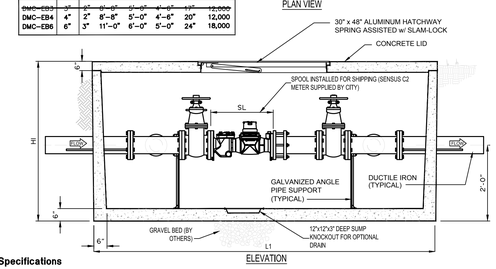

Specifications

CONCRETE : Class I/II concrete with design strength of 4500 PSI at 28 days. Unit is of monolithic construction at floor and first stage of wall with sectional riser to required depth.

REINFORCEMENT: Grade 60 reinforced. Steel rebar conforming to ASTM A615 on required centers or equal.

HATCHWAY: 1/4" Aluminum diamond plate cover with extruded aluminum frame. Hatch to be furnished with 316 stainless steel snap lock & hinges.

7 4" DOMESTIC & 6" FIRE DOUBLE CHECK BACKFLOW PREVENTER ASSEMBLY

BELOW GROUND

NOT TO SCALE

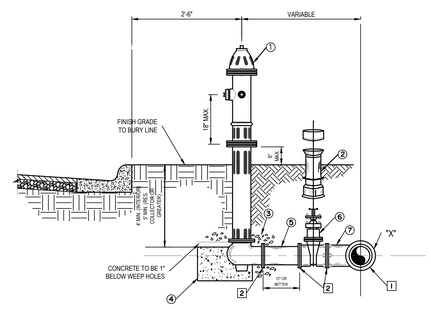

STANDARD FIRE HYDRANT INSTALLATION

MULLER/SUPER CENTURION 250 A-423 OR AMERICAN DARLING B-84-B (SEE NOTE 4) ONLY

NOTE: FIRE HYDRANT TO BE PAINTED RED.

NOTES:

1.) OIL SHALL BE PLACED IN HYDRANT AT THE TIME OF INSTALLATION.
2.) PUMPER NOZZLE SHALL FACE ROADWAY. (5 1/2" N.S.T.)
3.) IN CERTAIN INSTANCES, WHERE DISTANCE PERMITS, A PARALLEL TEE OR UNION-TITE 90° ELBOW WIRESTRAINING LUGS MAY BE USED IN LEIU OF A STANDARD TEE. FINAL APPROVAL BY THE CITY OF EDINBURG REQUIRED.
4.) IF AMERICAN DARLING IS USED MODEL B-84-B w/EPOXY COAT VALVE PLATE AND INTERIOR SHOE.
5.) TAPPING SLEEVES TO HAVE STAINLESS STEEL BOLTS AND NUTS.
6.) ALL VALVES, FITTINGS & HYDRANTS & ACCESSORIES TO BE GREASED WRAPPED IN PLASTIC.
7.) ALL VALVES, FITTINGS AND ACCESSORIES, VALVE BOXES, METER BOXES AND COVERS MUST BE APPROVED BY THE CITY OF EDINBURG.

FIRE HYDRANT INSTALLATION CONSIST OF FIRE HYDRANT, VALVE AND VALVE BOX

FIRE HYDRANT UNIT SHALL INCLUDE:

1.) FIRE HYDRANT w/ (4 1/2" PUMPER NOZZLE)
2.) VALVE BOX (DOMESTIC)
3.) 3 CU. FT. GRAVEL
4.) 3 CU. FT. CONCRETE 1" BELOW HYDRANT WEEP HOLES.
5.) 1" OR BETTER PVC SPOOLS
6.) 6" RESILIENT SEAT GATE VALVE (FLANGED X M.J.)
7.) X"x6" CAST IRON TEE (FLANGED X M.J.)
"x" WATER MAIN DIA.

1 MECHANICAL JOINT
2 FLANGE

8 CITY OF EDINBURG - FIRE HYDRANT INSTALLATION DETAIL

NOT TO SCALE

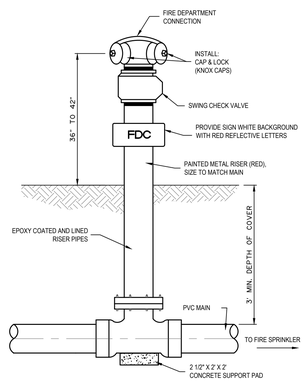

9 FIRE DEPARTMENT CONNECTION DETAIL

NOT TO SCALE

muñoz & company
1017 NORTH MAIN SUITE 300
SAN ANTONIO, TEXAS 78212
O. 210.349.1163 F. 210.525.1038
WWW.MUNOZ-CO.COM

PCE
Texas Registered Engineering Firm F-2158
808 Dallas Ave. McAllen, Texas 78501
(956) 631-4452

STATE OF TEXAS
J. DAVID PEREZ
89429
LICENSED
PROFESSIONAL ENGINEER
11-6-18

UTRGV
The University of Texas Rio Grande Valley

UNIVERSITY OF TEXAS RIO GRANDE VALLEY
SCHOOL OF MEDICINE
TEAM BASED LEARNING CENTER
PROJECT NO:903-1159
EDINBURG, TX
100% CONSTRUCTION DOCUMENTS

Issue/Revision

#	DESCRIPTION	DATE

Sheet Title
TYPICAL DETAILS

Date
NOVEMBER 8, 2018

Project Number	Drawn By	Checked By
MUN18103	JH	DP

Sheet Number
C111

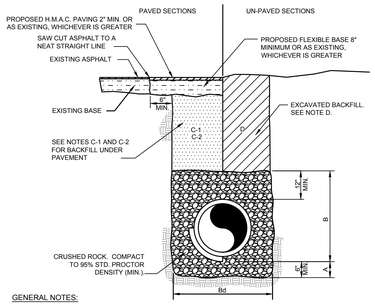

GENERAL NOTES:

A. CRUSHED ROCK BEDDING PLACED, HAND LEVELED, AND COMPACTED BEFORE PIPE IS LAID, UP TO BOTTOM OF PIPE (MIN. THICKNESS = 4").

B. CRUSHED ROCK BACKFILL PLACED AND COMPACTED AFTER PIPE IS LAID, FROM BOTTOM OF PIPE TO 12" ABOVE THE TOP OF PIPE. WORK IN UNDER PIPE HAUNCHES AND COMPACT BY HAND TO SPRING LINE. USE VIBRATORY-TYPE COMPACTORS FOR LIFTS ABOVE THE SPRING LINE. MAXIMUM 6" LIFTS.
Bd. MINIMUM TRENCH WIDTH: PIPE O.D. + 16" (FOR 16" PIPE AND SMALLER); PIPE O.D. X 1.25 + 12" (FOR 18" PIPE AND LARGER)

C-1. (CITY STREETS, PARKING AREA, AND DRIVEWAYS) SELECT EXCAVATED BACKFILL MECHANICALLY COMPACTED TO 95% STANDARD PROCTOR DENSITY IN 8" MAX. LIFTS.

C-2 (STATE MAINTAINED ROADWAY) SAND/CEMENT STABILIZED BACKFILL WITH 7% PORTLAND CEMENT COMPACTED TO 95% STANDARD PROCTOR DENSITY.

D. EXCAVATED EARTH BACKFILL MECHANICALLY COMPACTED IN 12" MAX. LIFTS. MINIMUM STANDARD PROCTOR DENSITY: 90% OUTSIDE RIGHT OF WAY; 95% INSIDE RIGHT OF WAY

EMBEDMENT SHALL BE IN ACCORDANCE WITH THE REQUIREMENTS OF ASTM D 2321. EMBEDMENT MATERIAL SHALL BE CLASS 1A (CRUSHED ROCK) OR 1B (CRUSHED ROCK-SAND MIXTURE) WITH LESS THAN 50% PASSING A No. 4 SIEVE. MAXIMUM ¾" SIZE FOR PIPE SIZE ≤ 15". GREATER THAN 90% OF CRUSHED ROCK SHALL HAVE AT LEAST THREE BROKEN FACES. NO MORE THAN 2% UNBROKEN FRACTION ALLOWED.

IN SATURATED OR UNSTABLE SOILS, EMBEDMENT SHALL BE CLASS 1B ONLY (SEE SPECIFICATIONS FOR GRADATION REQUIREMENTS).

WHERE THIS STANDARD CONFLICTS WITH THE RECOMMENDATION OF ANY GEOTECHNICAL REPORT, OBTAIN WRITTEN CLARIFICATION FROM THE UTILITY ENGINEER PRIOR TO CONSTRUCTION.

FOUNDATION PREPARATION USING COBBLES, GRAVEL, CEMENT STABILIZATION, OR OTHER METHODS AS APPROVED BY THE ENGINEER SHALL BE REQUIRED WHEN TRENCH BOTTOM IS UNSTABLE.

BACKFILLING AT STRUCTURES SHALL BE PLACED IN UNIFORM LAYERS, AND COMPACTED TO 95% STANDARD PROCTOR DENSITY IN 6" MAXIMUM LIFTS. STRUCTURE BACKFILL MATERIAL SHALL BE SAND.

1 SANITARY SEWER(NON-FORCEMAIN) PIPE BEDDING DETAIL
NOT TO SCALE

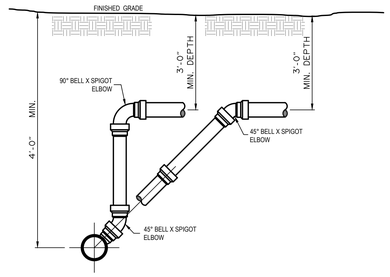

2 TYPICAL DEEP SANITARY SEWER SERVICE CONNECTION
NOT TO SCALE

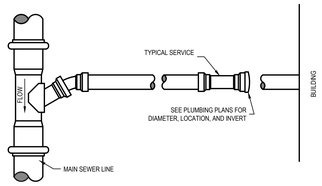

NOTE:
A SOUND DETECTION REFLECTOR "STUB-DEC-TA-CAL" BY GRIFFOLYN, INC. OR AN APPROVED SUBSTITUTE, WILL BE FASTENED TO THE END OF EACH SERVICE CONNECTION STUB TO FACILITATE LOCATION SERVICE STUBS.

3 SINGLE SANITARY SEWER SERVICE
NOT TO SCALE

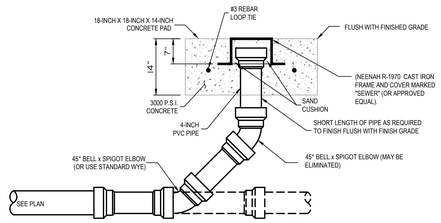

4 STANDARD EXTERIOR CLEANOUT
NOT TO SCALE

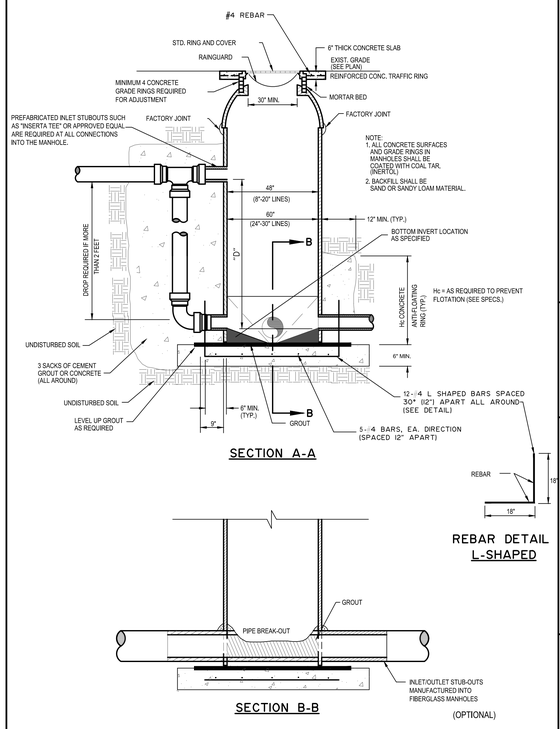

5 SAN. SEWER FIBERGLASS MANHOLE DETAIL
NOT TO SCALE

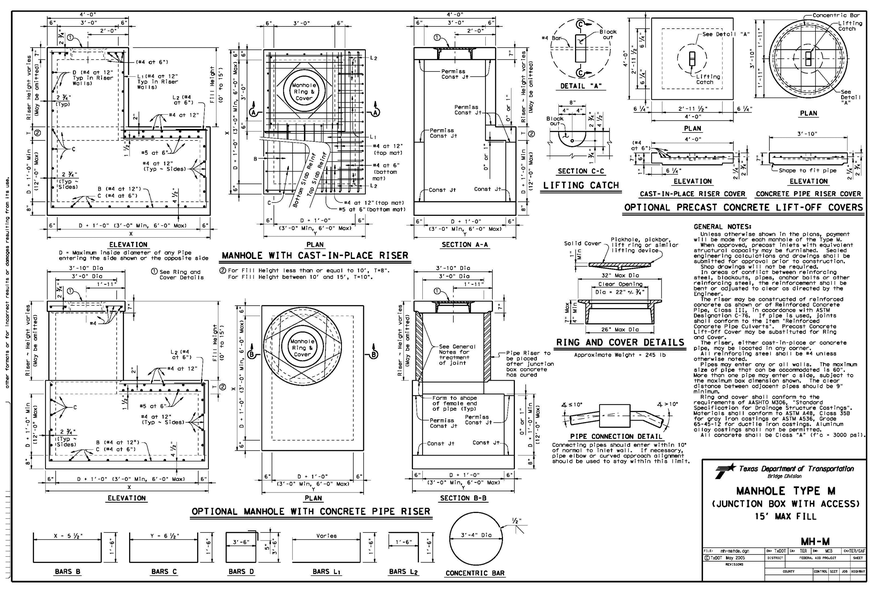

6 TYPE M MANHOLE DETAIL
NOT TO SCALE

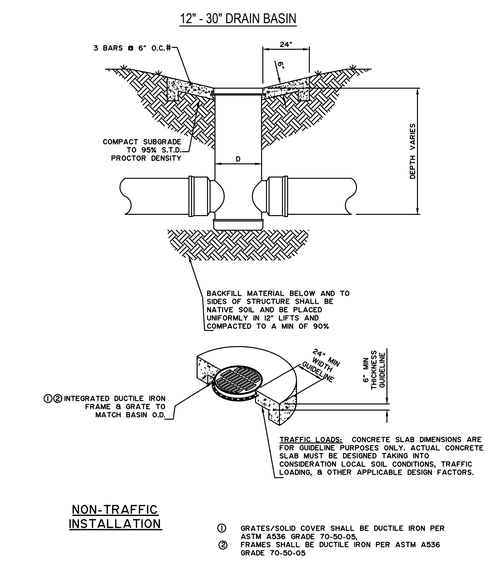

7 12"-30" DRAIN BASIN WITH CIRCULAR CONCRETE APRON
NOT TO SCALE

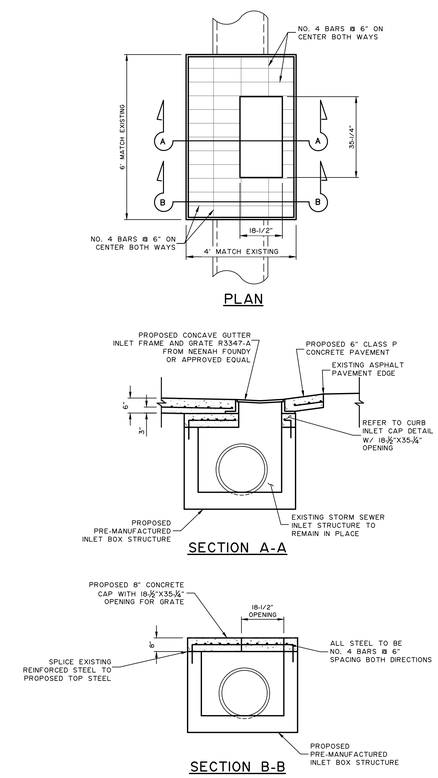

8 MODIFIED EXISTING INLET DETAIL
NOT TO SCALE

muñoz & company
1017 NORTH MAIN SUITE 300
SAN ANTONIO, TEXAS 78212
O. 210.349.1169 F. 210.525.1038
WWW.MUNOZ-CO.COM

PCE
Texas Registered Engineering Firm F-2158
808 Dallas Ave. McAllen, Texas 78501
(956) 631-4452

STATE OF TEXAS
J. DAVID PEREZ
80429
LICENSED
PROFESSIONAL ENGINEER
11-6-18

UTRGV
The University of Texas Rio Grande Valley

UNIVERSITY OF TEXAS RIO GRANDE VALLEY
SCHOOL OF MEDICINE
TEAM BASED LEARNING CENTER
PROJECT NO:903-1159
EDINBURG, TX
100% CONSTRUCTION DOCUMENTS

Issue/Revision

#	DESCRIPTION	DATE

Sheet Title
TYPICAL DETAILS

Date
NOVEMBER 8, 2018

Project Number	Drawn By	Checked By
MUN18103	JH	DP

Sheet Number
C112

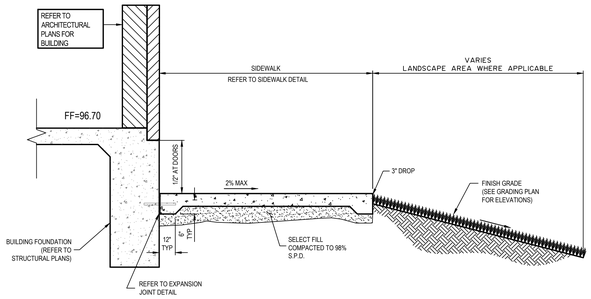

1 SECTION DETAIL
NOT TO SCALE

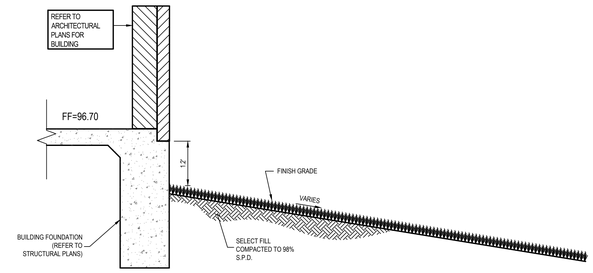

2 SECTION DETAIL
NOT TO SCALE

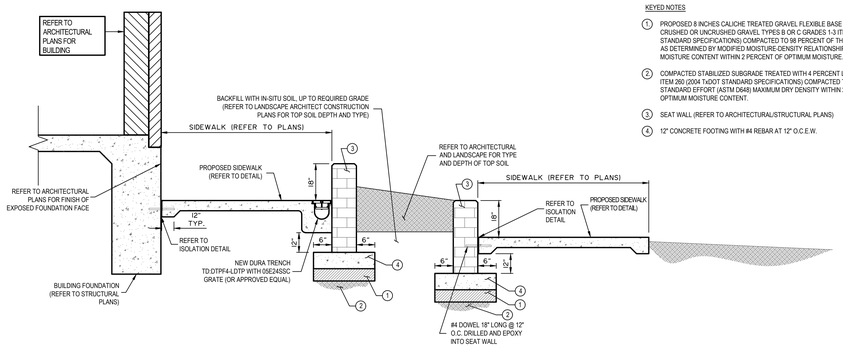

KEYED NOTES

1. PROPOSED 8 INCHES CALICHE TREATED GRAVEL FLEXIBLE BASE MATERIAL COMPOSED OF CRUSHED OR UNCRUSHED GRAVEL TYPES B OR C GRADES 1-3 ITEM 247 (2014 TxDOT STANDARD SPECIFICATIONS) COMPACTED TO 98 PERCENT OF THE MAXIMUM DRY DENSITY AS DETERMINED BY MODIFIED MOISTURE-DENSITY RELATIONSHIP (A.S.T.M. 1557) AT MOISTURE CONTENT WITHIN 2 PERCENT OF OPTIMUM MOISTURE.
2. COMPACTED STABILIZED SUBGRADE TREATED WITH 4 PERCENT LIME IN ACCORDANCE TO ITEM 260 (2004 TxDOT STANDARD SPECIFICATIONS) COMPACTED TO 95 PERCENT OF THE STANDARD EFFORT (ASTM D548) MAXIMUM DRY DENSITY WITHIN 2 PERCENT OF THE OPTIMUM MOISTURE CONTENT.
3. SEAT WALL (REFER TO ARCHITECTURAL/STRUCTURAL PLANS)
4. 12" CONCRETE FOOTING WITH #4 REBAR AT 12" O.C.E.W.

3 SECTION DETAIL
NOT TO SCALE

KEYED NOTES

1. PROPOSED 8 INCHES CALICHE TREATED GRAVEL FLEXIBLE BASE MATERIAL COMPOSED OF CRUSHED OR UNCRUSHED GRAVEL TYPES B OR C GRADES 1-3 ITEM 247 (2014 TxDOT STANDARD SPECIFICATIONS) COMPACTED TO 98 PERCENT OF THE MAXIMUM DRY DENSITY AS DETERMINED BY MODIFIED MOISTURE-DENSITY RELATIONSHIP (A.S.T.M. 1557) AT MOISTURE CONTENT WITHIN 2 PERCENT OF OPTIMUM MOISTURE.
2. COMPACTED STABILIZED SUBGRADE TREATED WITH 4 PERCENT LIME IN ACCORDANCE TO ITEM 260 (2004 TxDOT STANDARD SPECIFICATIONS) COMPACTED TO 95 PERCENT OF THE STANDARD EFFORT (ASTM D548) MAXIMUM DRY DENSITY WITHIN 2 PERCENT OF THE OPTIMUM MOISTURE CONTENT.
3. SEAT WALL (REFER TO ARCHITECTURAL/STRUCTURAL PLANS)
4. 12" CONCRETE FOOTING WITH #4 REBAR AT 12" O.C.E.W.

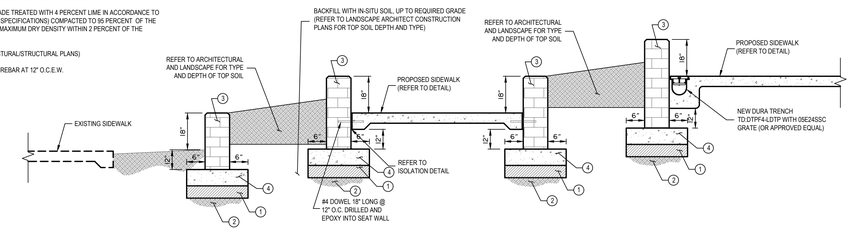

4 SECTION DETAIL
NOT TO SCALE

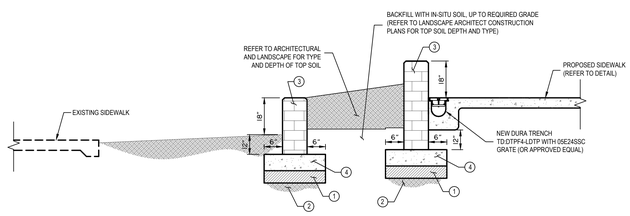

5 SECTION DETAIL
NOT TO SCALE

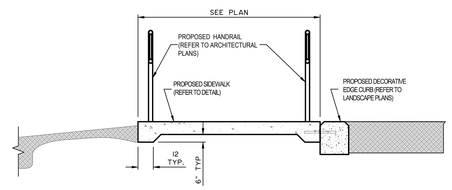

6 SECTION DETAIL
NOT TO SCALE

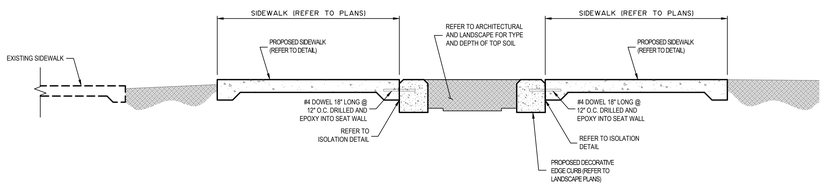

7 SECTION DETAIL
NOT TO SCALE

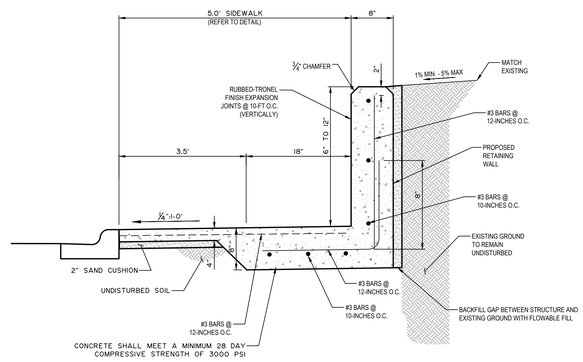

8 SECTION DETAIL
NOT TO SCALE

muñoz & company
1017 NORTH MAIN SUITE 300
SAN ANTONIO, TEXAS 78212
O. 210.319.1169 F. 210.525.1038
WWW.MUNOZ-CO.COM

PCE
Texas Registered Engineering Firm F-2158
808 Dallas Ave. McAllen, Texas 78501
(956) 631-4482

STATE OF TEXAS
J. DAVID PEREZ
89429
LICENSED
PROFESSIONAL ENGINEER
11-6-18

UTRGV
The University of Texas Rio Grande Valley

UNIVERSITY OF TEXAS RIO GRANDE VALLEY
SCHOOL OF MEDICINE
TEAM BASED LEARNING CENTER
PROJECT NO:903-1159
EDINBURG, TX
100% CONSTRUCTION DOCUMENTS

Issue/Revision

#	DESCRIPTION	DATE

Sheet Title
TYPICAL DETAILS

Date
NOVEMBER 8, 2018

Project Number	Drawn By	Checked By
MUN18103	JH	DP

Sheet Number
C113

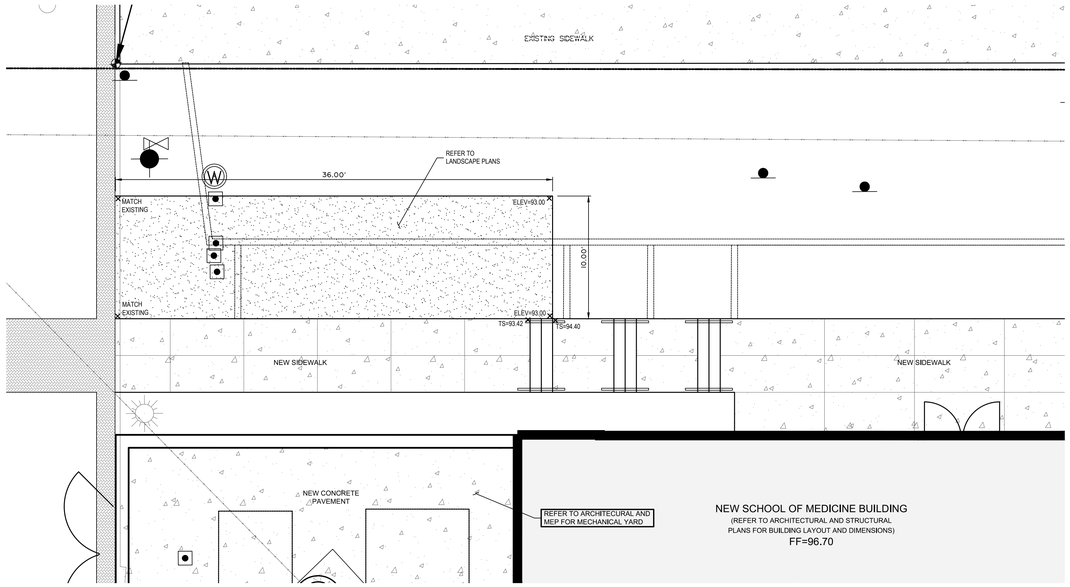

1 ALTERNATE NO. 5
NOT TO SCALE

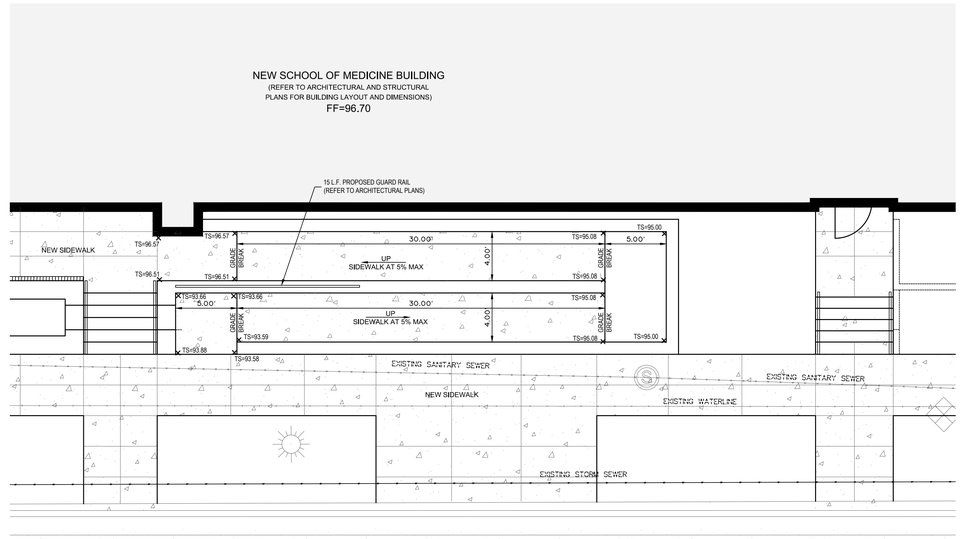

2 ALTERNATE NO. 6
NOT TO SCALE

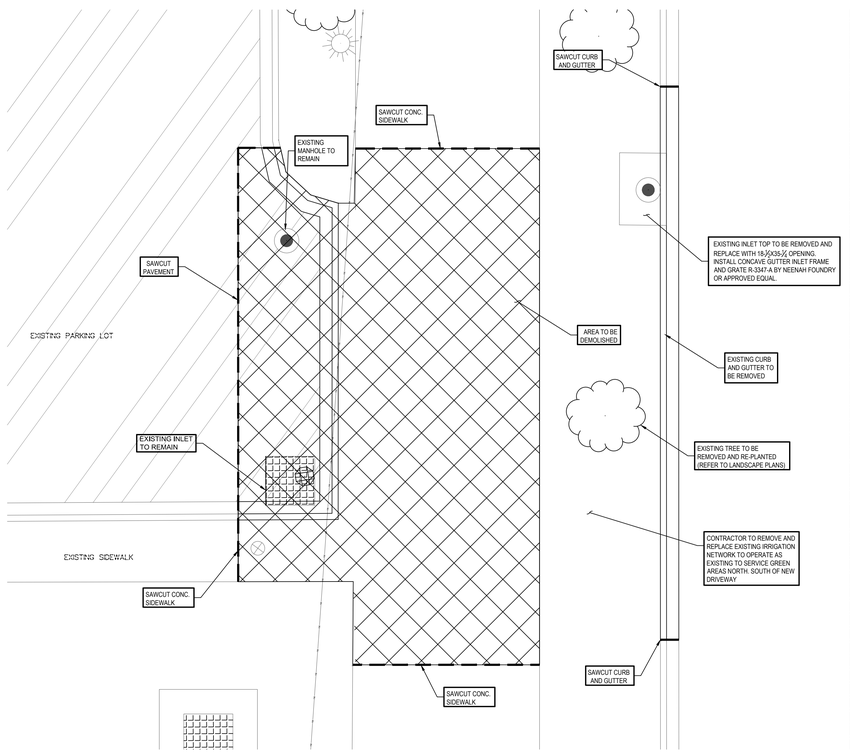

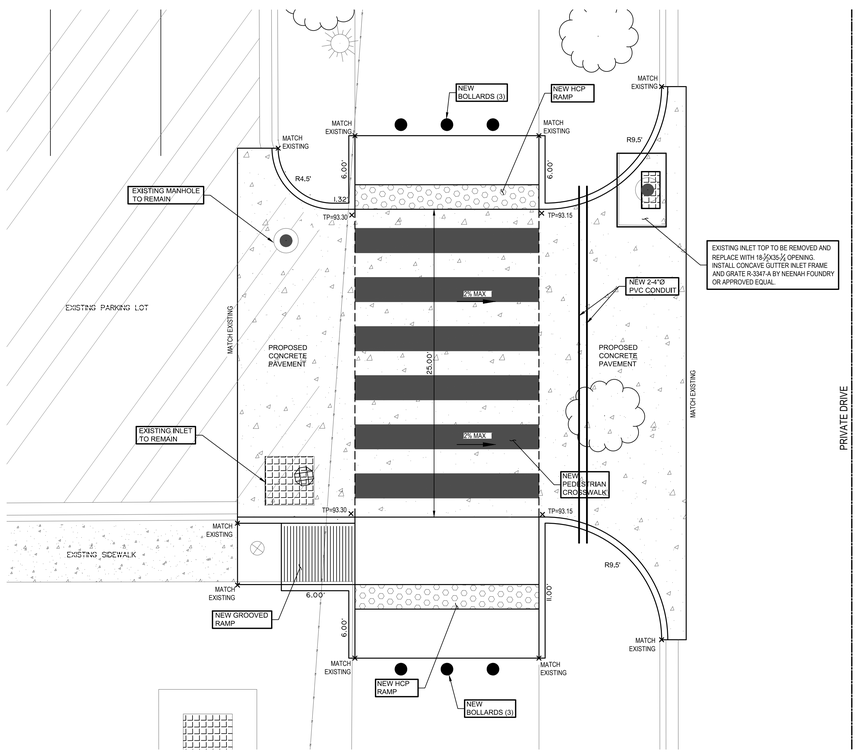

3 TYPICAL DETAIL
NOT TO SCALE

muñoz & company
1017 NORTH MAIN SUITE 300
SAN ANTONIO, TEXAS 78212
O. 210.319.1169 F. 210.525.1038
WWW.MUNOZ-CO.COM

PCE
Texas Registered Engineering Firm F-2158
808 Dallas Ave. McAllen, Texas 78501
(956) 631-4452

STATE OF TEXAS
J. DAVID PEREZ
89429
LICENSED
PROFESSIONAL ENGINEER
11-6-18

UTRGV
The University of Texas Rio Grande Valley

UNIVERSITY OF TEXAS RIO GRANDE VALLEY
SCHOOL OF MEDICINE
TEAM BASED LEARNING CENTER
PROJECT NO:903-1159
EDINBURG, TX
100% CONSTRUCTION DOCUMENTS

Issue/Revision

#	DESCRIPTION	DATE

Sheet Title
TYPICAL DETAILS

Date
NOVEMBER 8, 2018

Project Number	Drawn By	Checked By
MUN18103	JH	DP

Sheet Number
C114

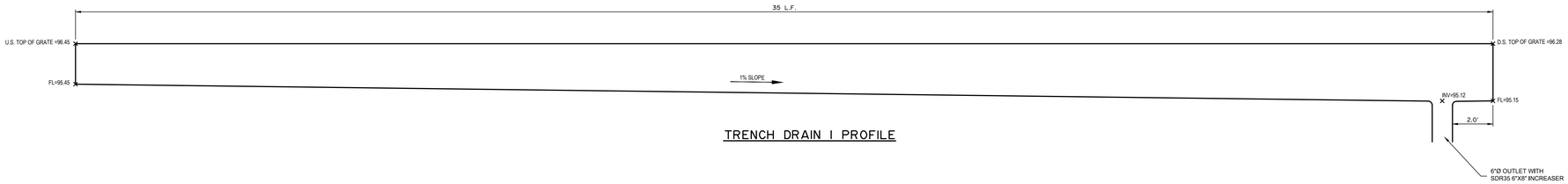

TRENCH DRAIN 1 PROFILE

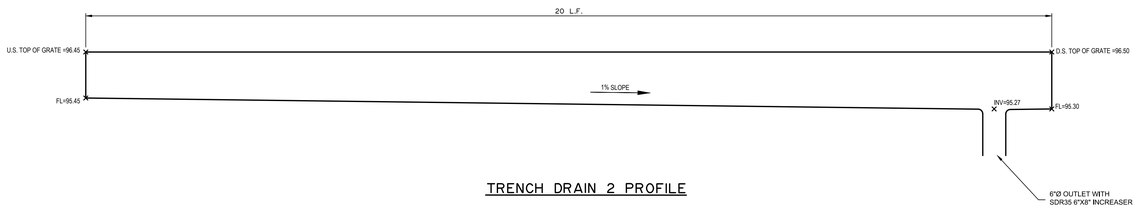

TRENCH DRAIN 2 PROFILE

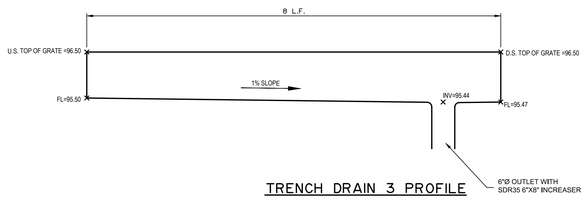

TRENCH DRAIN 3 PROFILE

1 TYPICAL DETAIL
NOT TO SCALE

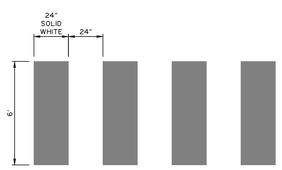

PEDESTRIAN CROSSING AT
ASPHALT SURFACE

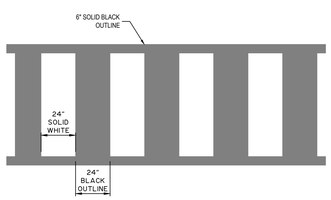

PEDESTRIAN CROSSING AT
CONCRETE PAVEMENT

2 CROSSWALK DETAIL
NOT TO SCALE

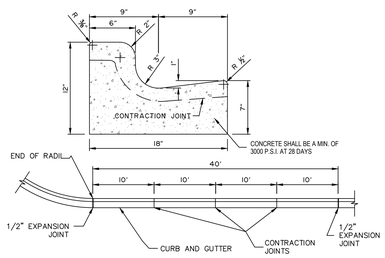

TYPICAL JOINTS

GENERAL NOTES:
1. ALL CONCRETE WORK SHALL BE TREATED WITH MEMBRANE CURING COMPOUND TYPE 2 WHITE PIGMENTED IN ACCORDANCE w/ THD 1972 SPECIFICATIONS ITEM 531. CONSIDERED INCIDENTAL TO CONCRETE WORK.
2. 1/2" EXPANSION JOINTS REQUIRED AT 40' c.c. AND AT THE BEGINNING AND END OF ALL RADII. CONTRACTION JOINTS SHALL NOT EXCEED 10' c.c.

3 CURB AND GUTTER DETAIL
NOT TO SCALE

muñoz & company
1017 NORTH MAIN SUITE 300
SAN ANTONIO, TEXAS 78212
O. 210.319.1169 F. 210.525.1038
WWW.MUNOZ-CO.COM

PCE
Texas Registered Engineering Firm F-2158
808 Dallas Ave. McAllen, Texas 78501
(956) 631-4452

STATE OF TEXAS
J. DAVID PEREZ
89429
LICENSED
PROFESSIONAL ENGINEER
11-6-18

UTRGV
The University of Texas
Rio Grande Valley

UNIVERSITY OF TEXAS RIO GRANDE VALLEY
SCHOOL OF MEDICINE
TEAM BASED LEARNING CENTER
PROJECT NO:903-1159
EDINBURG, TX
100% CONSTRUCTION DOCUMENTS

Issue/Revision

#	DESCRIPTION	DATE

Sheet Title
TYPICAL DETAILS

Date
NOVEMBER 8, 2018

Project Number	Drawn By	Checked By
MUN18103	JH	DP

Sheet Number
C115

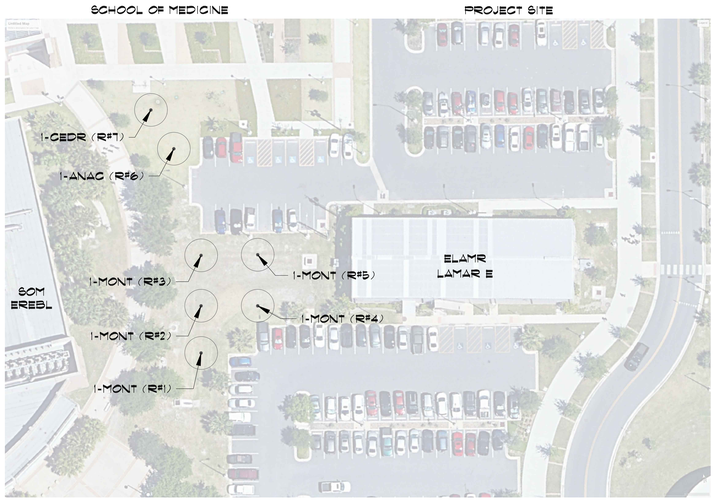

1 TREE RELOCATION PLAN

NOT TO SCALE

TREE NORTH
PLAN NORTH

LEGEND

	TYPE OF TREE/PALM	SYM.	CAL.	NOTE
1	MONTEZUMA CYPRESS		8"	TO RELOCATE (AS SHOWN)
2	MONTEZUMA CYPRESS		8"	TO RELOCATE (AS SHOWN)
3	MONTEZUMA CYPRESS		8"	TO RELOCATE (AS SHOWN)
4	MONTEZUMA CYPRESS		8"	TO RELOCATE (AS SHOWN)
5	MONTEZUMA CYPRESS		8"	TO RELOCATE (AS SHOWN)
6	ANACUA		4"	TO RELOCATE (AS SHOWN)
7	CEDAR ELM		4"	TO RELOCATE (AS SHOWN)

CONTRACTOR NOTES

1. CONTRACTOR IS RESPONSIBLE FOR ALL PROTECTION MEASURES AND SHALL REPLACE ANY DAMAGED VEGETATION LABELED FOR PROTECTION (SEE SPECIFICATIONS)
2. RELOCATIONS SHALL BE COMPLETED BY A CERTIFIED NURSERY/LANDSCAPE PROFESSIONAL.
3. RELOCATED MATERIAL SHALL BE RE-INSTALLED ON CAMPUS AS DIRECTED BY CM/LANDSCAPE ARCHITECT.
4. SEE SPECIFICATIONS FOR FURTHER INFORMATION AND REQUIREMENTS.

LEGEND

	TO RELOCATE (AS SHOWN ON PLAN WITH SINGLE MOVE)
	EXISTING TREES TO REMAIN WITH PROTECTION FENCE

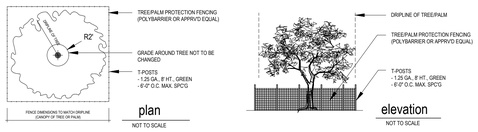

2 TREE/PALM PROTECTION FENCING

NOT TO SCALE

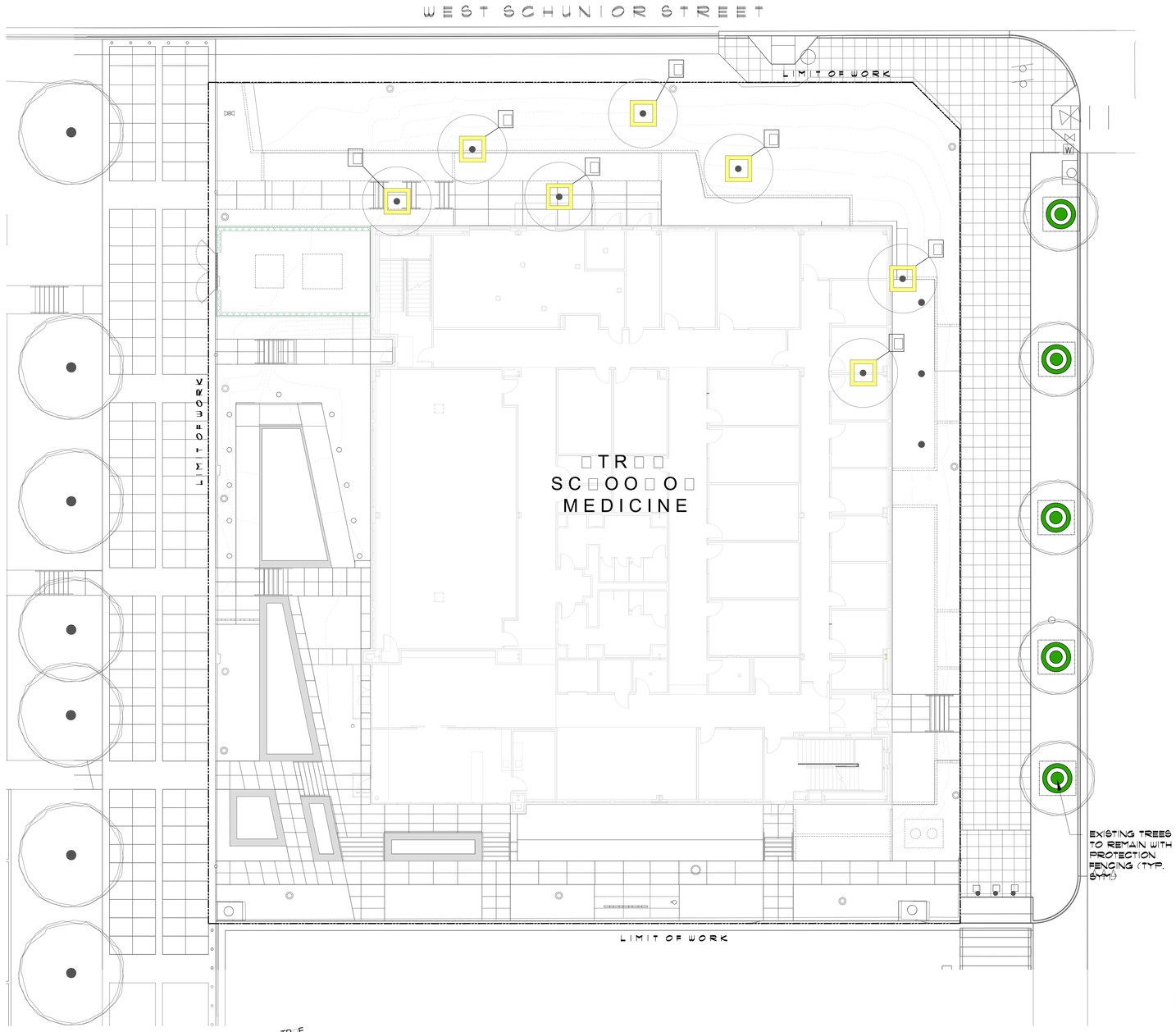

3 TREE SURVEY PLAN

SCALE 1"=1'-0"

TREE NORTH
PLAN NORTH

muñoz & company
1017 NORTH MAIN SUITE 300
SAN ANTONIO, TEXAS 78212
O. 210.349.1163 F. 210.525.1038
WWW.MUNOZ-CO.COM

REGISTERED LANDSCAPE ARCHITECT STEVEN M. RAINE 1600 STATE OF TEXAS
11/08/18

smr landscape architecture
STEVEN M. RAINE INC.
Dallas, Texas
Tel
Email smr@smrla.com

SSP Design
789 EAST WASHINGTON STREET
BROWNSVILLE, TEXAS 78520
TEL(956) 547-9788
FAX(956) 547-9977
SPAJESA@SSPDESIGN.COM

UTRGV
The University of Texas Rio Grande Valley

UNIVERSITY OF TEXAS RIO GRANDE VALLEY
SCHOOL OF MEDICINE
TEAM BASED LEARNING CENTER
PROJECT NO: 903-1159
EDINBURG, TX
100% CONSTRUCTION DOCUMENTS

Issue/Revision

#	DESCRIPTION	DATE

Sheet Title
TREE SURVEY/RELOCATION PLAN

D: NOVEMBER 08, 2018

Project Number	Drawn By	Checked By
A17021.00	PLM	SSP

Sheet Number
L1.00

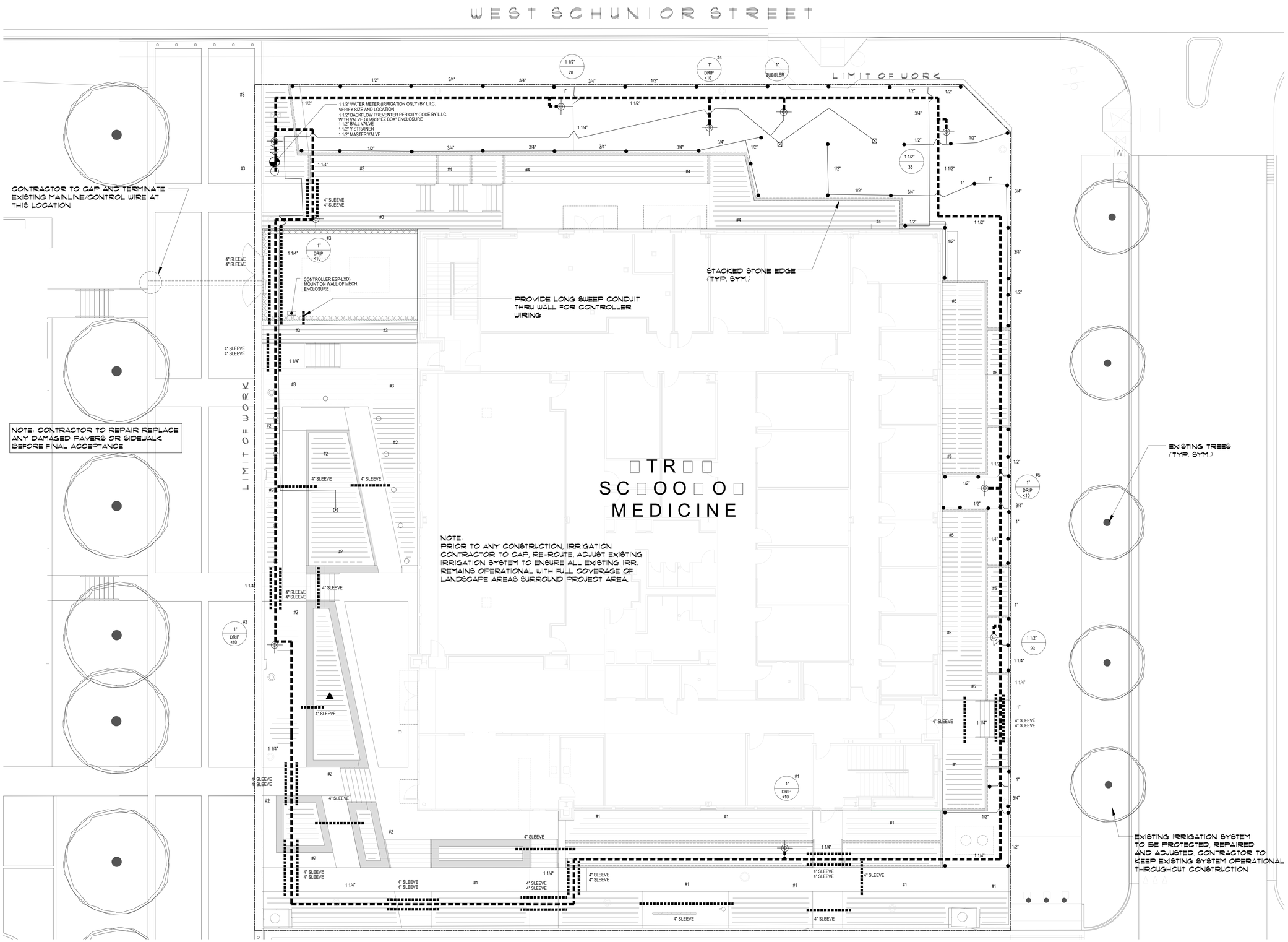

IRRIGATION LEGEND

- RAINBIRD R□AN SERIES ROTAR□ NO□□E OR APPRO□ED E□□A□
- RAINBIRD □□□□B□BB□ER □EAD OR APPRO□ED E□ □A□
- RAINBIRD □□□□PC □ROTORS OR APPRO□ED E□□A□
- RAINBIRD □□□□C □ROTORS OR APPRO□ED E□□A□
- RAINBIRD □□IC□ CO□P□ER □A□□E OR APPR□E□□A□ □□□D□RC□ □□IC□ CO□P□ERS S□A□□BE CONNECTED TO MAIN□INE ADD ONE □ONE T□AT ACTI□ATES MASTER □A□□E AND ACTI□ATES T□E □□IC□ CO□P□ERS□□ABE□ON CO□ORED □ONIN□ DIA□RAM
- RAINBIRD PEB SERIES E□ECTRIC □A□□E OR APPRO□ED E□□A□
- CONTRO□ER □ESP□□□D T□ O □IRE □IT□ I□ NCC□EN□ET□ERNET CARTRID□E□ □IT□ □□O□ SENSIN□/M□MT AND □□O□ SENSOR □S□□□□P AND □IRE□ESS RAIN/□REE□E SENSOR CONTRACTOR TO SET □P CONTRO□□ER ON O□ NERS SO□T□ ARE INC□□ TESTIN□ AND TRAININ□
- □ATER METER □AS SI□ED□
- BAC□□□O□ PRE□ENTER □AS SI□ED□
- C□ASS □□□P□C □ATERA□PIPIN□
- C□ASS □□□ P□C MAIN□INE
- SC□□□□P□C S□EE□IN□ □AS SI□ED□
- □A□□E SI□E □PM
- RAINBIRD DRIP□INE □□S OR APPRO□ED E□□A□ □□□" □ATERA□SPACIN□□□□" EMITER SPACIN□□ □□SERIES TIE DO□N STA□ES □TDS□□□□□ □□" O□C□□ T□ O ON EAC□ TEE/E□BO□ P□C □ATERA□PIPIN□ SI□ED AS RE□□IRED
- RAINBIRD DRIP CONTRO□□ONE □IT □C□□□□PRB□COM □EAC□ DRIP □ONE□ □" BA□□ □A□□E □ IT□ RE□□□ATED PRESS□RE AND □□□MES□ □I□TRATION □□DRIP S□STEM OPERATION INDICATOR □OPERIND□PER IRRI□ATION □ONE
- INSTA□□A□□E□□IPMENT ACCORDIN□ TO MAN□□ACT□RERS SPECI□ICATIONS A□□□□A□□E BO□ES S□A□□BE RAINBIRD □B□STD OR APPRO□ED E□□A□ A□□□□A□□E BO□ES S□A□□□A□E □I□TER □ABRIC AND □" O□ □RA□E□AT BASE
- DRIP□INE □BED□
- □□□ RAIN

NOTE□

Irri□ation Contractor to coordinate with □andsca□e Contractor on layout o□ all beds□Adjust dri□line location □er installed ed□in□□

BUBBLER PIPING CHART

NUMBER OF BUBBLERS	SI□E O□ PIPE
□□□	/"
□□□□	/"
□□□□	□"
□□□□	□/"
□□□□	□/"

S□EE□IN□ NOTES

□□Irri□ation Contractor shall su□□ly and □install sleeves and conduits at twenty□our □□" inches below □inish □rade o□ the to□□o□ □avement□ Bore as re□uired□

□□Irri□ation Contractor shall e□tend sleeves one □□□oot beyond ed□e o□all □avement□

□□Irri□ation Contractor shall ca□□i□e ends usin□P□C ca□s□

□□All sleeves shall be Schedule □□P□C □i□e□

1 IRRIGATION PLAN

SCA□E:1/" □ □□□"

TRUE NORTH

PLAN NORTH

muñoz & company
1017 NORTH MAIN SUITE 300
SAN ANTONIO, TEXAS 78212
O. 210.349.1163 F. 210.525.1038
WWW.MUNOZ-CO.COM

STATE OF TEXAS JOHN M. WINGFIELD 1851 LICENSED IRRIGATOR

smr landscape architecture
STE□EN M□RA□N□INC□
□□□□N□□W□in Street
Dallas□Te□as □□□□
Tel □□□□□□□□□□
□a□□□□□□□□□□□
Email smr□□smr la□com

SSP Design
789 EAST WASHINGTON STREET
BROWNSVILLE, TEXAS 78520
TEL(956) 547-9788
FAX(956) 547-9977
SPACESMORESPDESIGN.COM

UTRGV
The University of Texas Rio Grande Valley

UNIVERSITY OF TEXAS RIO GRANDE VALLEY
SCHOOL OF MEDICINE
TEAM BASED LEARNING CENTER

PROJECT NO: 903-1159

EDINBURG, TX

100% CONSTRUCTION DOCUMENTS

Issue/Revision

#	DESCRIPTION	DATE

Sheet Title

IRRIGATION PLAN

Date

NOVEMBER 08, 2018

Project Number	Drawn By	Checked By
A17021.00	PLM	SSP

Sheet Number

L1.01

IRRIGATION LEGEND

- RAINBIRD R□AN SERIES ROTAR□ NO□□E OR APPRO□ED E□□A□
- RAINBIRD □□□□B□BB□ER □EAD OR APPRO□ED E□□A□
- RAINBIRD □□□□PC □ROTORS OR APPRO□ED E□□A□
- RAINBIRD □□□□C □ROTORS OR APPRO□ED E□□A□
- RAINBIRD PEB SERIES E□ECTRIC □A□□E OR APPRO□ED E□□A□
- CONTRO□ER □ESP□□D T□ O □IRE □IT□ I□ NCC□EN□ET□ERNET CARTRID□E□ □IT□ □O□ SENSIN□/M□MT AND □O□ SENSOR □S□□□P AND □IRE□ESS RAIN/□REE□E SENSOR CONTRACTOR TO SET □P CONTRO□ER ON O□NERS SO□T□ ARE INC□□ TESTIN□ AND TRAININ□
- □ ATER METER □AS SI□ED□
- BAC□□□O□ PRE□ENTER □AS SI□ED□
- C□ASS □□□P□C □ATERA□PIPIN□
- C□ASS □□□ P□C MAIN□INE
- SC□□□□P□C S□EE□IN□ □AS SI□ED□
- □A□□E SI□E □PM
- DRIP□INE□BED□
- RAIN

RAINBIRD DRIP□INE □□S OR APPRO□ED E□□A□
□□* □ATERA□SPACIN□□□□* EMITER SPACIN□□
□□SERIES TIE DO□N STA□ES □TDS□□□□□ □□* O C□□ T□ O ON EAC□ TEE/E□BO□
P□C □ATERA□PIPIN□ SI□ED AS RE□□IRED
RAINBIRD DRIP CONTRO□□□ONE □IT □C□□□□PRB□COM OR APPRO□ED E□□A□
□EAC□ DRIP □ONE□
□* BA□□□A□E □IT□ RE□□□ATED PRESS□RE AND □□□MES□ □□TRATION
□□DRIP S□STEM OPERATION INDICATOR □OPERIND□ PER IRRI□ATION □ONE
INSTA□□A□□E □□□IPMENT ACCORDIN□ TO MAN□□ACT□RERS SPECI□ICATIONS
A□□□A□□E BO□ES S□A□□ BE RAINBIRD □B□STD OR APPRO□ED E□□A□
AND S□A□□□A□E □□TER □ABRIC AND □* O□ □RA□E□AT BASE

DESIGN PRESSURE 60 PSI

ELECTRICAL SPLICES AT EACH VALVE AND CONTROLLER ONLY.

IRRIGATION IN TEXAS IS REGULATED BY THE TEXAS COMMISSION ON ENVIRONMENTAL QUALITY (TCEQ) MC-178/ P.O.BOX 13087, AUSTIN, TX 78711-3087. TECQ'S WEBSITE IS: www.tceq.state.tx.us

IRRIGATION NOTES

□□E□ECTRIC CONTRO□□□A□□ES shall be PEB installed as □er detail shown□Si□e valves as shown on □lans□□alves shall be installed in valve bo□es lar□e enou□h to □ermit manual o□eration□removal o□solenoid and/or valve cover without any earth e□cavation□

□□A□□□A□□E BO□ES to be set □lush or □/□" above □inish □rade□Do not locate valve bo□es in low s□ots or swales□

□□A□□E□ECTRICA□ CONNECTIONS re□uire water □roo□wire connectors□□se RB □□PCONN N □□□□□ or conv□or □ C□□□ or □wire□

□□□IC□□CO□P□IN□ □A□□ES shall be Rainbird installed as □er detail shown□ Swin□joints shall be constructed usin□ □/□" Sch□□elbows□Irri□ation Contractor shall su□□ly owner with three □□□cou□lers and three □□swivel hose ells as □art o□this contract□

□□A□TOMATIC CONTRO□□ER shall be installed at location shown□Power □□□□shall be located in a junction bo□within □ive□eet □□o□controller location□Power su□□ly data line □CAT □□and junction bo□to be □rovided at controller location by □eneral Contractor□

□□All □□volt valve wirin□is to be □□ □□sin□le conductor□All wire s□lices are to be □ermanent and water□roo□□

□□S□EE□ES shall be su□□lied and installed by Irri□ation Contractor□Sleeve material shall be Schedule □□□Bore under e□istin□ □avement as re□uired□Si□es as indicated on □lans□

□□Ten days □rior to start o□construction□contractor shall veri□y static water □ressure□I□static □ressure is less than □□PSI□do not start work until noti□ied to do so by SSP Desi□n□

□□All mainline and lateral □i□in□shall have a minimum o□□□inches o□cover□All □i□in□under □avin□shall have a minimum o□□□inches o□cover□

□□□The irri□ation contractor shall coordinate installation o□the system with the landsca□e contractor so that all □lant material will be watered in accordance with the intent o□the □lans and s□eci□ications□

□□□The irri□ation contractor shall select the □ro□er arc and radius □or each no□le to insure □□□□ and □ro□er covera□e o□all lawn areas and □lant material□All no□les in □arkin□□lots and □lantin□beds shall be low an□le to minimi□e overs□ray on □avement sur□aces□No water will be allowed to s□ray on Buildin□s□sidewalks or driveways□

□□□The irri□ation contractor shall warranty all system com□onents □or a □eriod o□one year□

□□□See s□eci□ications □or □urther instructions and □roject re□uirements□

A□□□A□□E BO□ES S□A□□ BE RAINBIRD □B□STD OR APPRO□ED E□□A□
A□□□A□□E BO□ES S□A□□□A□E □□TER □ABRIC AND □* O□ □RA□E□AT BASE

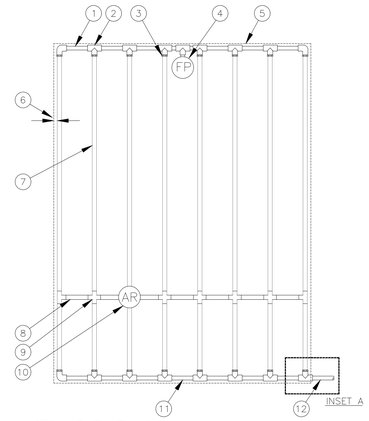

1 DRIPLINE
END FEED LAYOUT INST. N.T.S.

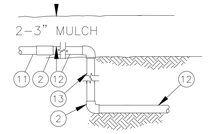

NOTES:
1. DISTANCE BETWEEN LATERAL ROWS AND EMITTER SPACING TO BE BASED ON SOIL TYPE, PLANT MATERIALS AND CHANGES IN ELEVATION. SEE RAIN BIRD XFS DRIPLINE INSTALLATION GUIDE FOR SUGGESTED SPACINGS.
2. LENGTH OF LONGEST DRIPLINE LATERAL SHOULD NOT EXCEED THE MAXIMUM LENGTH SHOWN IN THE ACCOMPANYING TABLE.
3. AIR RELIEF VALVE TO BE INSTALLED AT HIGH POINT OF AREA.

□□S Dri□line Or A□□roved E□ual Ma□imum □ateral □en□ths □□eet□

Inlet Pressure	12" Spacing		18" Spacing		24" Spacing	
	Nominal	Flow (GPH)	Nominal	Flow (GPH)	Nominal	Flow (GPH)
psi	0.6	0.9	0.6	0.9	0.6	0.9
15	255	194	357	273	448	343
20	291	220	408	313	514	394
30	350	266	494	378	622	478
40	396	302	560	428	705	541
50	434	333	614	470	775	594

1. PVC EXHAUST HEADER
2. PVC SCH 40 TEE OR EL (TYPICAL)
3. BARB X MALE FITTING: RAIN BIRD XFD-MA FITTING (TYPICAL)
4. FLUSH POINT (TYPICAL) SEE RAIN BIRD DETAIL "XFS FLUSH POINT" OR "XFS FLUSH POINT WITH BALL VALVE"
5. PERIMETER OF AREA
6. PERIMETER DRIPLINE PIPE TO BE INSTALLED 2"-4" FROM PERIMETER OF AREA
7. SUB-SURFACE DRIPLINE: RAIN BIRD XF SERIES DRIPLINE (TYPICAL) POTABLE: XFS DRIPLINE OR APPROVED EQUAL
8. ½" POLYETHYLENE BLANK TUBING:
9. BARB X BARB INSERT TEE OR CROSS: RAIN BIRD XFD-TEE OR RAIN BIRD XFD-CROSS (TYPICAL) OR APPROVED EQUAL
10. AIR RELIEF VALVE: RAIN BIRD AR VALVE KIT SEE RAIN BIRD DETAIL "AIR RELIEF VALVE KIT"
11. PVC SUPPLY HEADER
12. PVC DRIP MANIFOLD FROM RAIN BIRD CONTROL ZONE VALVE KIT (SIZED TO MEET LATERAL FLOW DEMAND)
13. PVC SCH 40 RISER PIPE

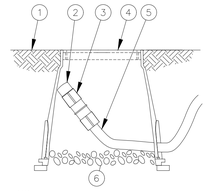

1. FINISH GRADE
2. FLUSH CAP FOR EASY FIT COMPRESSION FITTINGS: POTABLE: RAIN BIRD MDCFCAP NON-POTABLE: RAIN BIRD MDCFPCAP OR APPROVED EQUAL
3. EASY FIT COUPLING: RAIN BIRD MDCFCOUP OR APPROVED EQUAL
4. SUBTERRANEAN EMITTER BOX: RAIN BIRD SEB 7XB OR APPROVED EQUAL
5. SUB-SURFACE DRIPLINE: RAIN BIRD XF SERIES DRIPLINE POTABLE: XFS DRIPLINE OR APPROVED EQUAL
6. 4-INCH MINIMUM DEPTH OF 3/4-INCH WASHED GRAVEL WITH FILTER FABRIC AT BASE

NOTE:
1. ALLOW A MINIMUM OF 6-INCHES OF DRIPLINE TUBING IN VALVE BOX IN ORDER TO DIRECT FLUSHED WATER OUTSIDE VALVE BOX.

2 DRIPLINE VALVE BOX
NOT TO SCALE

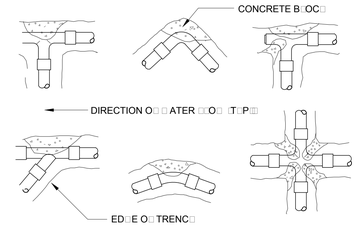

T□R□ST B□OC□ BEARIN□ AREA □S□□□T□□			
PIPE SI□E	□□/□"	□□/□"	□"
TEES/E□S □□BENDS □□BENDS	□□□ □□□ □□□	□□□ □□□ □□□	□□□ □□□ □□□

NOTE□
INSTA□□T□R□ST B□OC□ AT A□□ MAIN□INE BENDS□TEES OR E□□S AS S□O□N BE□O□ □T□R□ST B□OC□S S□A□□BE MINIM□M D□ □□C□□T□REDI M□□CONCRETE OR □□□PSI □□DA□CONCRETE□

3 THRUST BLOCK DETAIL
NOT TO SCALE

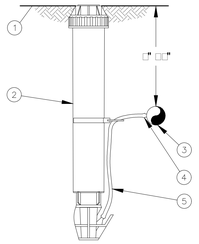

1. □INIS□□RADE/T□R□
2. MICRO□SPRA□□POP□P□ RAIN BIRD □ERI POP □P□□□□ □IT□□□AN NO□□E OR APPRO□ED E□□A□
3. S□B S□R□ACE DRIP□INE□ RAIN BIRD □□SERIES DRIP□INE POTAB□E□□S DRIP□INE NON POTAB□E□□SP DRIP□INE OR APPRO□ED E□□A□
4. □/□" BARB TRANS□ER□ITTIN□□ RAIN BIRD □B□CONN OR APPRO□ED E□□A□
5. □/□" DISTRIB□TION T□BIN□□ RAIN BIRD □□T□BIN□ OR APPRO□ED E□□A□ □EN□T□AS RE□□IRED□

NOTE:
1. USE XERIMAN TOOL XM-TOOL TO INSERT BARB TRANSFER FITTING DIRECTLY INTO DRIPLINE TUBING.
2. ONE DRIPLINE INDICATOR (OPERIND) PER DRIP ZONE.

4 DRIPLINE INDICATOR (OPERIND)
NOT TO SCALE

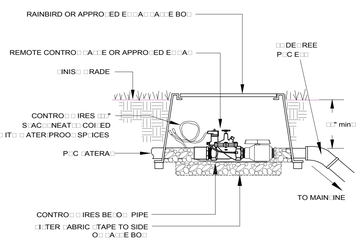

A□□□A□□E BO□ES S□A□□□A□E □□TER □ABRIC AND □* O□ □RA□E□AT BASE

5 REMOTE CONTROL VALVE
NOT TO SCALE

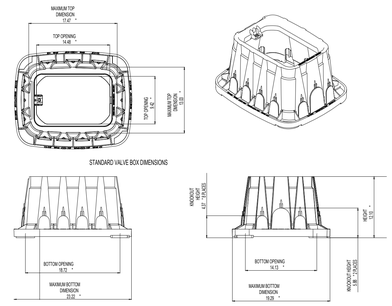

A□□□A□□E BO□ES S□A□□BE RAINBIRD □B□STD OR APPRO□ED E□□A□
A□□□A□□E BO□ES S□A□□□A□E □□TER □ABRIC AND □* O□ □RA□E□AT BASE

6 VALVE BOX (VB-STD)
NOT TO SCALE

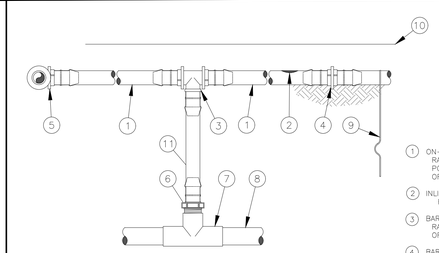

NOTES:
1. PLACE TIE DOWN STAKES EVERY THREE FEET IN SAND, FOUR FEET IN LOAM, AND FIVE FEET IN CLAY.
2. AT FITTINGS WHERE THERE IS A CHANGE OF DIRECTION SUCH AS TEES OR ELBOWS, USE TIE-DOWN STAKES ON EACH LEG OF THE CHANGE OF DIRECTION.
3. SAVE YOUR HANDS. USE THE RAIN BIRD FITTINGS-TOOL XF INSERTION TOOL FOR FITTING ASSEMBLY.

1. ON-SURFACE DRIPLINE: RAIN BIRD XF SERIES DRIPLINE POTABLE: XFS DRIPLINE OR APPROVED EQUAL
2. INLINE DRIP EMITTER OUTLET, SEE PLANS FOR DRIPLINE OUTLET SPACING.
3. BARB TEE 17x17x17mm RAIN BIRD XFF-TEE OR APPROVED EQUAL
4. BARB COUPLING 17x17mm RAIN BIRD XFF-COUP OR APPROVED EQUAL
5. BARB ELBOW 17x17mm RAIN BIRD XFF-ELBOW OR APPROVED EQUAL
6. BARB MALE ADAPTER 17mm X 1/2" MPT RAIN BIRD XFF-MA-050 17mm X 3/4" MPT RAIN BIRD XFF-MA-075 OR APPROVED EQUAL
7. PVC TEE 5x5x7
8. PVC LATERAL SUPPLY HEADER
9. TIE DOWN STAKE: RAIN BIRD TDS-050 WITH BEND (TYPICAL)
10. MULCH
11. RAIN BIRD XF SERIES BLANK TUBING LENGTH AS REQUIRED

7 DRIPLINE
SUB-HEADER INST. N.T.S.

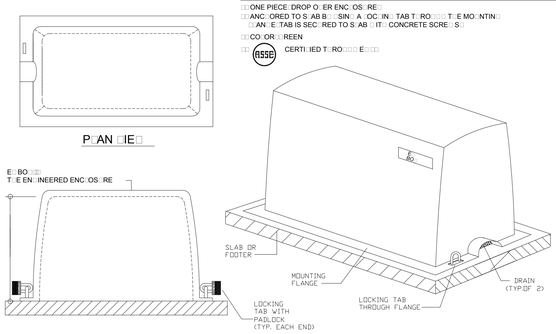

NOTES□
□□ONE PIECE □DROP O□ER ENC□OS□RE□
□□ANC□ORED TO S□AB B□□SIN□ A□OC□IN□TAB T□RO□□□T□E MO□NTIN□
□□AN□E□TAB IS SEC□RED TO S□AB □IT□CONCRETE SCRE□S□
□□CO□OR□□REEN
□□ CERTI□IED T□RO□□□E□□□

Hot Box®
250 LANE AVE. N
JACKSONVILLE, FLORIDA 32254
(904) 786-0204 (800) 736-0238
FAX (904) 783-6965
http://www.hot-box.com

8 VALVE GUARD
NOT TO SCALE

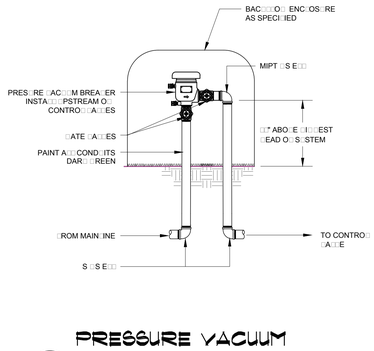

9 PRESSURE VACUUM BREAKER
NOT TO SCALE

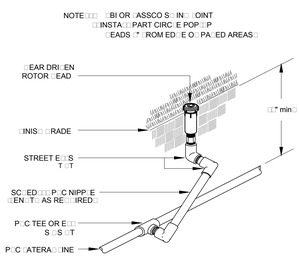

10 ROTOR POP-UP
NOT TO SCALE

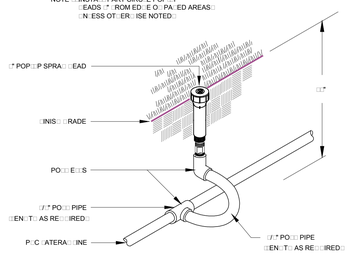

11 LAWN POP-UP HEAD
NOT TO SCALE

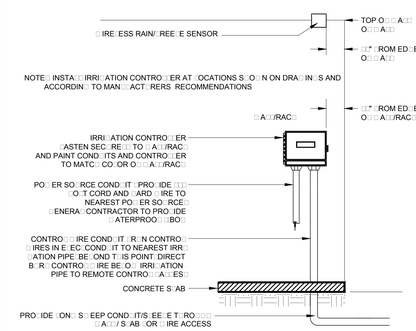

12 WALL/RACK MOUNTED CONTROLLER
NOT TO SCALE

muñoz & company
1017 NORTH MAIN SUITE 300
SAN ANTONIO, TEXAS 78212
O. 210.349.1163 F. 210.525.1038
W W W . M U N O Z - C O . C O M

□□/□□/□□

smr landsca□e architecture
STE□EN M□RA□N INC□
□□□N□□e□in Street
Dallas□Te□as □□□□
Tel □□□□□□□□□□
□a□□□□□□□□□□
Email smr□smr la com

SSP Design
789 EAST WASHINGTON STREET
BROWNSVILLE, TEXAS 78520
TEL(956) 547-9788
FAX(956) 547-9977
SPALDSGNS@SPDESIGN.COM

UTRGV
The University of Texas Rio Grande Valley

UNIVERSITY OF TEXAS RIO GRANDE VALLEY
SCHOOL OF MEDICINE
TEAM BASED LEARNING CENTER
PROJECT NO: 903-1159
EDINBURG, TX
100% CONSTRUCTION DOCUMENTS

Issue/Revision

#	DESCRIPTION	DATE

Sheet Title
IRRIGATION DETAILS

Date
NOVEMBER 08, 2018

Project Number	Drawn By	Checked By
A17021.00	PLM	SSP

Sheet Number
L1.02

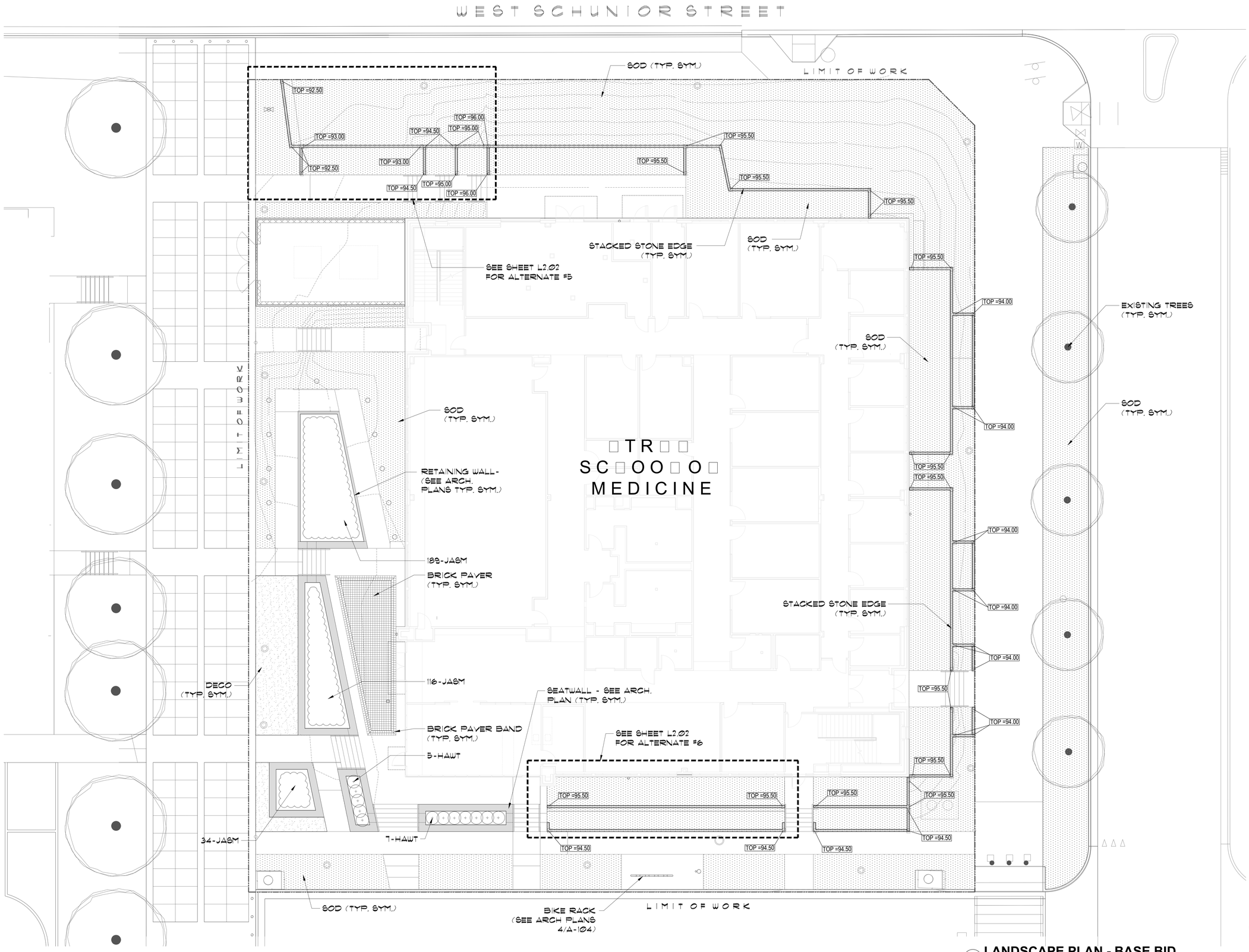

1 LANDSCAPE PLAN - BASE BID

SCALE: 1" = 1'-0"

muñoz & company
1017 NORTH MAIN SUITE 300
SAN ANTONIO, TEXAS 78212
O. 210.349.1163 F. 210.525.1038
WWW.MUNOZ-CO.COM

REGISTERED LANDSCAPE ARCHITECT STEVEN M. RAMIREZ 1600 STATE OF TEXAS
11/08/18

smr
landscape architecture
STEVEN M. RAMIREZ INC.
Dallas, Texas
Tel
Email smr@smr.la.com

SSP Design
789 EAST WASHINGTON STREET
BROWNSVILLE, TEXAS 78520
TEL(956) 547-9788
FAX(956) 547-9977
SPAJESKI@SSPDESIGN.COM

UTRGV
The University of Texas Rio Grande Valley

UNIVERSITY OF TEXAS RIO GRANDE VALLEY
SCHOOL OF MEDICINE
TEAM BASED LEARNING CENTER
PROJECT NO: 903-1159
EDINBURG, TX
100% CONSTRUCTION DOCUMENTS

Issue/Revision

#	DESCRIPTION	DATE

Sheet Title
LANDSCAPE PLAN
BASE BID

Date
NOVEMBER 08, 2018

Project Number	Drawn By	Checked By
A17021.00	PLM	SSP

Sheet Number
L2.01

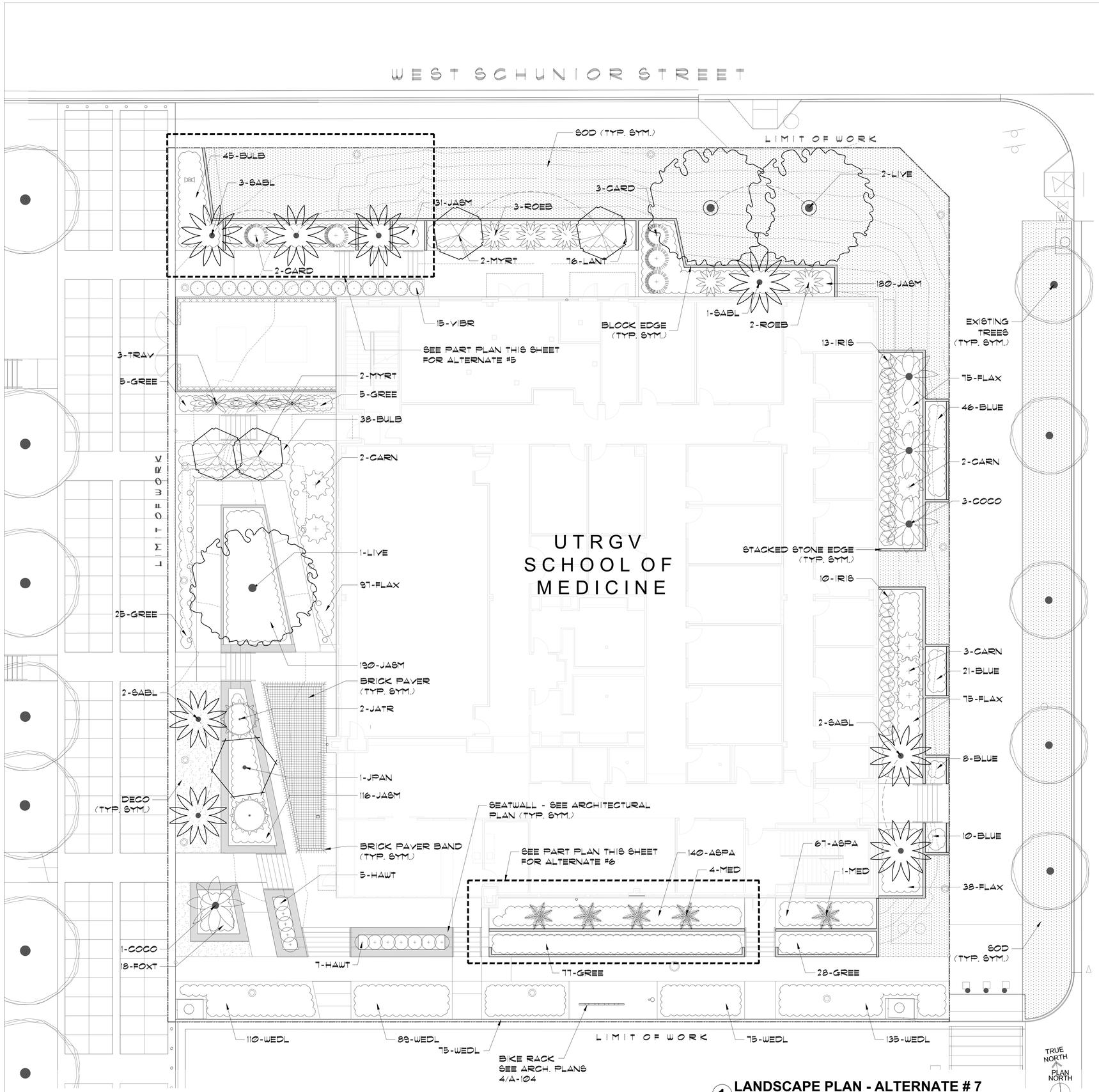

1 LANDSCAPE PLAN - ALTERNATE # 7
SCALE: 1/8" = 1'-0"

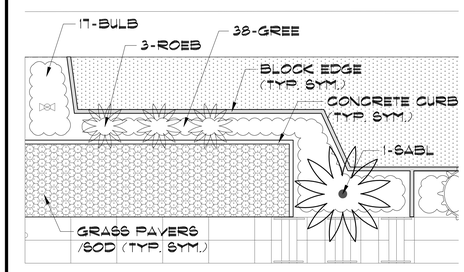

2 LANDSCAPE PLAN - ALTERNATE #5
SCALE: 1/8" = 1'-0"

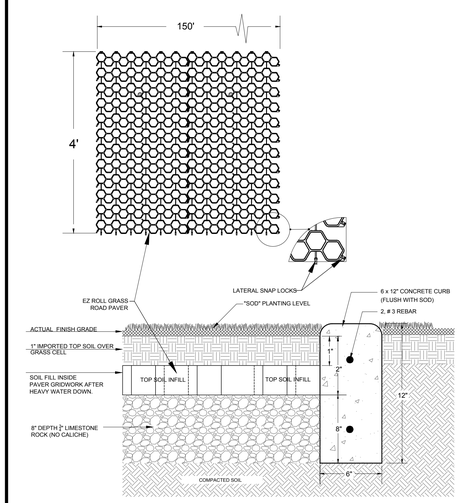

EZ ROLL GRASS PAVER PRODUCT DESCRIPTION
ROLL SIZE - 4' x 150' (600 s.: .t.)
CELLS PER PANEL (72) - 2-1/4" HEXAGONAL CELLS

1-888-825-4716
techservice@nds: ro.com

CONCRETE NOTES:
1. CONCRETE CURBING TO HAVE 1 1/2" DEEP CONTROL JOINTS @ 5'-0" SPACING.
2. 2500-3000 PSI COMPRESSIVE STRENGTH, 490 PSI FLEXURAL STRENGTH.
3. SMOOTH TROWELED FINISH AND NATURAL COLOR.

3 GRASS PAVER/CONCRETE CURB DETAIL - ALTERNATE #5
NOT TO SCALE

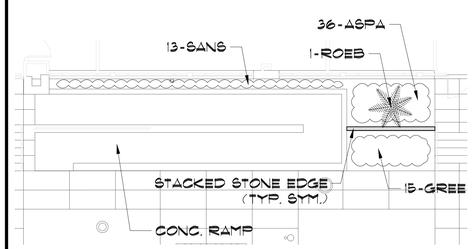

4 LANDSCAPE PLAN - ALTERNATE #6
SCALE: 1/8" = 1'-0"

muñoz & company
1017 NORTH MAIN SUITE 300
SAN ANTONIO, TEXAS 78212
O. 210.349.1163 F. 210.525.1038
W W W . M U N O Z - C O . C O M

REGISTERED LANDSCAPE ARCHITECT STEVEN M. RAHN 1760 STATE OF TEXAS
11/08/18

smr
landscape architecture
STEVEN M. RAHN, INC.
1708 N. Gri:.in Street
Dallas, Texas 75202
Tel 214.871.0083
Fax 214.871.0545
Email smr@smr-la.com

SSP Design
789 EAST WASHINGTON STREET
BROWNSVILLE, TEXAS 78520
TEL(956) 547-9788
FAX(956) 547-9977
SPACESORDESIGN.COM

UTRGV
The University of Texas Rio Grande Valley

UNIVERSITY OF TEXAS RIO GRANDE VALLEY
SCHOOL OF MEDICINE
TEAM BASED LEARNING CENTER
PROJECT NO: 903-1159
EDINBURG, TX
100% CONSTRUCTION DOCUMENTS

Issue/Revision

#	DESCRIPTION	DATE

Sheet Title
LANDSCAPE PLAN ALTERNATES

Date
NOVEMBER 08, 2018

Project Number	Drawn By	Checked By
A17021.00	PLM	SSP

Sheet Number
L2.02

PLANT SCHEDULE - BASE BID

CODE	BOTANICAL NAME	COMMON NAME	TYPE	SIZE	SPACING	QTY
	SHRUBS					
HAWT	RAPHIOLEPIS INDICA	INDIAN HAWTHORNE 'CLARA'	3 GAL	18"HT-BUSHY		12
	GROUND COVERS					
JASM	TRACH. ASIATICUM	ASIAN JASMINE	1 GAL		12" O.C.	339
	GRASS					
SOD	CYNODON DACTYLON	# 1 CERTIFIED 'FLORATAM' ST. AUGUSTINE SOD			1,110 S.Y.	

NOTE: CONTAINER GROWN TREES SHALL BE GLEN FLORA FARMS (979) 677-3342 OR APPROVED EQUAL.

MATERIAL SCHEDULE - BASE BID

DESCRIPTION	NOTES	QUANTITY
PREMIUM COMPOST	2" LAYER PREMIUM COMPOST (EARTHWISE ORGANICS MIX)	4 C.Y.
SCREENED TOP SOIL	8" FOR ALL PLANTING BEDS	17 C.Y.
MULCH (HARDWOOD)	3" MIN. FOR ALL PLANTING BEDS AND WATERING BASINS (TEXAS NATIVE HARDWOOD MULCH)	85 (2 C.F.) BAGS
HERBICIDE	ALL PLANTING BED AREAS AS SPECIFIED	676 S.F.
FERTILIZER	ALL PLANT MATERIAL PER DETAILS	--
PLANTING TABLETS	PER DETAILS / AS SPECIFIED	--
PRE-EMERGENT	ALL PLANTING BED AREAS AS SPECIFIED	676 S.F.
GUYING / STAKING	ALL TREES/PALMS PER DETAILS	--
DECO	4" COMPACTED DECOMPOSED GRANITE 'FINES' 1/4" MINUS PER PLANS/DETAILS	410 S.F.
STACKED STONE EDGE*	6" X 6" LIMESTONE BLOCK (AUSTIN WHITE CHOP) VARIOUS LENGTHS AS PER PLANS/DETAILS	950 F.F.
WEED BARRIER	'FABRISCAPES' WEED BARRIER -NON WOVEN 4.0 OZ.	1500 S.F.
*WASHED GRAVEL	6" DEPTH WASHED GRAVEL 'BLANCO CREEK' 1-3" - KELLER MATERIALS (210) 390-0953	25 C.Y.
BRICK PAVER	4X8" PAVESTONE 'HOLLANDSTONE' BRICK PAVERS (BUFF) - BASKET WEAVE	260 S.F.
PAVER BAND	6X6" PAVESTONE 'CITYSTONE' BRICK PAVERS (BUFF) - STACK BOND	90 S.F.
IRRIGATION SYSTEM	COMPLETE AUTOMATIC IRRIGATION SYSTEM PER PLANS/DETAILS BY LICENSED CONTRACTOR	--

NOTE: CONTRACTORS MUST REVIEW TECHNICAL SPECIFICATIONS FOR ADDITIONAL PROJECT INFORMATION AND REQUIREMENTS.
*STONE AND SOIL DEPOT 3005 E. HWY 83, DONNA, TX 78537 (956) 464-0777

PLANT SCHEDULE - ALTERNATE # 5

CODE	BOTANICAL NAME	COMMON NAME	TYPE	SIZE	SPACING	QTY
	PALMS					
MED	CHAMAEROPS HUMILIS	MED. FAN PALM (SINGLE)	B/B	60" TRUNK	A.S.	3
SABL	SABAL TEXANA	TEXAS SABAL PALM	B/B	6-8' TRUNK	A.S.	1
	SHRUBS					
GREE	FICUS MICROCARPA	GREEN ISLAND FICUS	3 GAL	12"HT-BUSHY	A.S.	38
	GROUND COVERS					
BULB	BULBINE FRUTESCENS	ORANGE BULBINE	1 GAL	12"HT-BUSHY	18" O.C.	17
	GRASS					
SOD	CYNODON DACTYLON	# 1 CERTIFIED 'FLORATAM' ST. AUGUSTINE SOD			40 S.Y.	

MATERIAL SCHEDULE - ALTERNATE # 5

DESCRIPTION	NOTES	QUANTITY
GRASS PAVERS	NDS EZ-ROLL GRASS ROAD PAVER FOR FIRE LANE 4 X 150' ROLLS AS PER PLANS/DETAILS	330 S.F.
LIMESTONE BASE	8" LIMESTONE BASE (3/4" WIDTH) AS PER PLANS/DETAILS	8 C.Y.
6 X 12" CONCRETE CURB	6 X 12" CONCRETE CURB FOR GRASS ROAD PAVERS AS PER PLANS/DETAILS	50 L.F.
IRRIGATION SYSTEM	COMPLETE AUTOMATIC IRRIGATION SYSTEM PER PLANS/DETAILS BY LICENSED CONTRACTOR	--

NOTE: CONTRACTORS MUST REVIEW TECHNICAL SPECIFICATIONS FOR ADDITIONAL PROJECT INFORMATION AND REQUIREMENTS.
*STONE AND SOIL DEPOT 3005 E. HWY 83, DONNA, TX 78537 (956) 464-0777

PLANT SCHEDULE - ALTERNATE #6

CODE	BOTANICAL NAME	COMMON NAME	TYPE	SIZE	SPACING	QTY
	PALMS					
MED	CHAMAEROPS HUMILIS	MED. FAN PALM (SINGLE)	B/B	60" TRUNK	A.S.	1
	SHRUBS					
GREE	FICUS MICROCARPA	GREEN ISLAND FICUS	3 GAL	12"HT-BUSHY	A.S.	15
SANS	CARISSA GRANDIFLORA	'BOXWOOD BEAUTY' NATAL PLUM	3 GAL	18"HT-BUSHY	18" O.C.	13
	GROUNDCOVERS					
ASPA	ASPARAGUS SPRENGERI	ASPARAGUS FERN	1 GAL		18" O.C.	36

PLANT SCHEDULE - ALTERNATE # 7

CODE	BOTANICAL NAME	COMMON NAME	TYPE	SIZE	SPACING	QTY
	PALMS					
COCO	SYAGRUS ROMANZ.	COCOS PALM	B/B	6-8' TRUNK	A.S.	4
MED	CHAMAEROPS HUMILIS	MED. FAN PALM (SINGLE)	B/B	60" TRUNK	A.S.	5
ROEB	PHOENIX ROEBELINII	PYGMY DATE PALM (TRIPLE)	15 GAL	100" TRUNK	A.S.	5
SABL	SABAL TEXANA	TEXAS SABAL PALM	B/B	6-8' TRUNK	A.S.	8
TRAV	RAVENALA MADAGASCARIENSIS	TRAVELERS PALM	15 GAL	6-8' TRUNK	A.S.	3
	TREES					
JAPN	ELAEOCARPUS DECIPIENS	JAPANESE BLUEBERRY (CONT. GROWN)	24" BOX	3-4" CAL. 8' HT X 4' W	A.S.	1
LIVE	QUERCUS VIRGINIANA	LIVE OAK (CONT. GROWN)	36" BOX	4-6' CAL. 13'H X 9'W	A.S.	3
MYRT	LAGERSTROEMIA x ' NATCHEZ'	'NATCHEZ' CRAPE MYRTLE	45 GAL	'MULTI' 12' HT. X 6' W	A.S.	4
	SHRUBS					
BLUE	RUELLIA SQUARROSA	BLUE SHADE RUELLIA	1 GAL	12"HT-BUSHY	12" O.C.	85
BULB	BULBINE FRUTESCENS	ORANGE BULBINE	1 GAL	12"HT-BUSHY	18" O.C.	83
CARD	ZAMIA MARITIMA	CARDBOARD PALM	10 GAL	24" WIDTH	A.S.	5
CARN	TABERNAEMONTANA DIVARICATA	INDIAN CARNATION	5 GAL	36"HT-BUSHY	A.S.	7
FLAX	DIANELLA TASMANICA	FLAX LILY 'VARIEGATED'	3 GAL	18"HT-BUSHY	A.S.	285
GREE	FICUS MICROCARPA	GREEN ISLAND FICUS	3 GAL	12"HT-BUSHY	A.S.	140
HAWT	RAPHIOLEPIS INDICA	INDIAN HAWTHORNE 'CLARA'	3 GAL	18"HT-BUSHY	A.S.	12
IRIS	DIETES IRIDIOIDES	WHITE AFRICAN IRIS	3 GAL	18"HT-BUSHY	18" O.C.	23
JATR	JATROPHA INTEGERRIMA	COMPACT JATROPHA	3 GAL	24"HT-BUSHY	A.S.	2
VIBR	VIBURNUM SUSPENSUM	SANDANKWA VIBURNUM	3 GAL	24"HT-BUSHY	A.S.	15
	GROUND COVERS					
ASPA	ASPARAGUS SPRENGERI	ASPARAGUS FERN	1 GAL		15" O.C.	207
FOXT	ASPARAGUS DENSIFORMIS	FOXTAIL FERN	1 GAL	12"HT-BUSHY	18" O.C.	18
JASM	TRACH. ASIATICUM	ASIAN JASMINE	1 GAL		12" O.C.	617
LANT	LANTANA CAMARA 'RED SPREAD'	'RED SPREAD' LANTANA	1 GAL		24" O.C.	76
WEDL	WEDELIA TRILOBATA	WEDELIA	4" POTS		12" O.C.	484
	GRASS					
SOD	CYNODON DACTYLON	# 1 CERTIFIED 'FLORATAM' ST. AUGUSTINE SOD			575 S.Y.	

NOTE: CONTAINER GROWN TREES SHALL BE GLEN FLORA FARMS (979) 677-3342 OR APPROVED EQUAL.

MATERIAL SCHEDULE - ALTERNATE # 7

DESCRIPTION	NOTES	QUANTITY
PREMIUM COMPOST	2" LAYER PREMIUM COMPOST (EARTHWISE ORGANICS MIX)	30 C.Y.
SCREENED TOP SOIL	8" FOR ALL PLANTING BEDS	131 C.Y.
MULCH (HARDWOOD)	3" MIN. FOR ALL PLANTING BEDS AND WATERING BASINS (TEXAS NATIVE HARDWOOD MULCH)	665 (2 C.F.) BAGS
HERBICIDE	ALL PLANTING BED AREAS AS SPECIFIED	5,324 S.F.
FERTILIZER	ALL PLANT MATERIAL PER DETAILS	--
PLANTING TABLETS	PER DETAILS / AS SPECIFIED	--
PRE-EMERGENT	ALL PLANTING BED AREAS AS SPECIFIED	5,324 S.F.
GUYING / STAKING	ALL TREES/PALMS PER DETAILS	--
DECO	4" COMPACTED DECOMPOSED GRANITE 'FINES' 1/4" MINUS PER PLANS/DETAILS	410 S.F.
STACKED STONE EDGE*	6" X 6" LIMESTONE BLOCK (AUSTIN WHITE CHOP) VARIOUS LENGTHS AS PER PLANS/DETAILS	950 F.F.
WEED BARRIER	'FABRISCAPES' WEED BARRIER -NON WOVEN 4.0 OZ.	1500 S.F.
*WASHED GRAVEL	6" DEPTH WASHED GRAVEL 'BLANCO CREEK' 1-3" - KELLER MATERIALS (210) 390-0953	25 C.Y.
BRICK PAVER	4X8" PAVESTONE 'HOLLANDSTONE' BRICK PAVERS (BUFF) - BASKET WEAVE	260 S.F.
PAVER BAND	6X6" PAVESTONE 'CITYSTONE' BRICK PAVERS (BUFF) - STACK BOND	90 S.F.
TREE RINGS	30" DIA. BLACK ANODIZED ALUMINUM EDGE 'DREAMSCAPES' TREE RINGS PER PLANS/DETAILS	2
IRRIGATION SYSTEM	COMPLETE AUTOMATIC IRRIGATION SYSTEM PER PLANS/DETAILS BY LICENSED CONTRACTOR	--

NOTE: CONTRACTORS MUST REVIEW TECHNICAL SPECIFICATIONS FOR ADDITIONAL PROJECT INFORMATION AND REQUIREMENTS.
*STONE AND SOIL DEPOT 3005 E. HWY 83, DONNA, TX 78537 (956) 464-0777

CONSTRUCTION NOTES

1. WORK UNDER THIS CONTRACT INCLUDES SITE REVIEW AND COORDINATION WITH EXISTING CONDITIONS, SITE CLEANUP, EXCAVATION, BED PREP, TILLING, PLANTING, STAKING, EDGING, IRRIGATION, TREE RINGS, DECOMPOSED GRANITE, MAINTENANCE, AND GUARANTEE.
2. LANDSCAPE CONTRACTOR SHALL VERIFY ALL QUANTITIES AND DIMENSIONS PRIOR TO BIDDING. QUANTITIES SHOWN IN SCHEDULE ARE FOR CONVENIENCE ONLY.
3. NOTIFY SSP DESIGN OF ANY DISCREPANCIES IN DRAWINGS/DETAILS OR INSUFFICIENT QUANTITIES DUE TO DIFFERENCES IN PLAN AND ACTUAL FIELD CONDITIONS.
4. LANDSCAPE CONTRACTOR SHALL BE RESPONSIBLE FOR LOCATING AND PROTECTING ALL EXISTING UTILITIES. SPOTTING OF ALL UTILITIES IS REQUIRED.
5. NOTIFY AND MEET WITH SSP DESIGN PRIOR TO ANY CONSTRUCTION FOR VERIFICATION/INTERPRETATION OF PLANS.
6. LANDSCAPE CONTRACTOR SHALL STAKE OUT ALL BEDS, TREES, PALM LOCATIONS PRIOR TO INSTALLATION FOR APPROVAL BY SSP DESIGN.
7. CONTRACTOR TO COORDINATE WITH SSP DESIGN TO ENSURE PROPER PLACEMENT OF PLANT MATERIAL AND IRRIGATION EQUIPMENT.
8. CONTRACTOR TO INSTALL EXTRUDED CONCRETE EDGE AND TREE RINGS AS SHOWN ON PLANS.
9. NOTIFY SSP DESIGN/OWNER PRIOR TO PLANTING OPERATIONS FOR APPROVAL OF ALL PLANT MATERIAL ON SITE. ANY PLANT MATERIAL NOT APPROVED BY SSP DESIGN/OWNER WILL BE SUBJECT TO REJECTION.
10. IRRIGATION CONTRACTOR SHALL SUPPLY AND INSTALL COMPLETE AUTOMATIC IRRIGATION SYSTEM INCLUDING WATER METER, BACKFLOW DEVICE, CONTROLLER, MAINLINE, SLEEVES, DRIP, CISTER/PUMPS, TO COVER ALL LANDSCAPE AREAS PER PLANS/DETAILS. IRRIGATION SYSTEM SHALL BE INSTALLED BY A TEXAS LICENSED IRRIGATOR ONLY.
11. CONTRACTOR SHALL REMOVE ALL EXISTING GRASS/WEEDS IN BEDS BY HERBICIDING PRIOR TO BED PREP AND SOIL REPLACEMENT.
12. CONTRACTOR SHALL PRUNE ALL EXISTING PALMS/TREES BY A CERTIFIED ARBORIST AS DIRECTED BY SSP DESIGN.
13. CONTRACTOR SHALL REMOVE ALL EXISTING GRASS AND WEEDS BY HERBICIDING, DISKING, FLOATING AND LIGHT GRADING OF ENTIRE PROJECT AREA PRIOR TO HYDROMULCHING/SODDING.
14. CONTRACTOR SHALL REMOVE 12" OF EXST'G SOIL WITHIN ALL BED AREAS AND REPLACE WITH IMPORTED TOP SOIL/PREMIUM COMPOST MIX.
15. LANDSCAPE CONTRACTOR SHALL CONSTRUCT 6"x36" WATERING BASINS AROUND ALL TREES/PALMS WITH A MIN. 2" LAYER OF CYPRESS MULCH.
16. LANDSCAPE CONTRACTOR SHALL LOOSEN / GRADE ALL LAWN AREAS PRIOR TO HYDRO-MULCHING/SODDING TO ENSURE PROPER DRAINAGE AND UNIFORM SURFACE.
17. LANDSCAPE CONTRACTOR SHALL ESTABLISH AND MAINTAIN ALL PLANT MATERIAL FOR 90 DAYS AFTER 'SUBSTANTIAL COMPLETION' AND SHALL GUARANTEE ALL TREES/PALMS FOR A PERIOD OF ONE YEAR.
18. IRRIGATION CONTRACTOR SHALL GUARANTEE ALL SYSTEM COMPONENTS FOR A PERIOD OF ONE YEAR.
19. SEE SPECIFICATION FOR FURTHER INSTRUCTIONS/REQUIREMENTS.

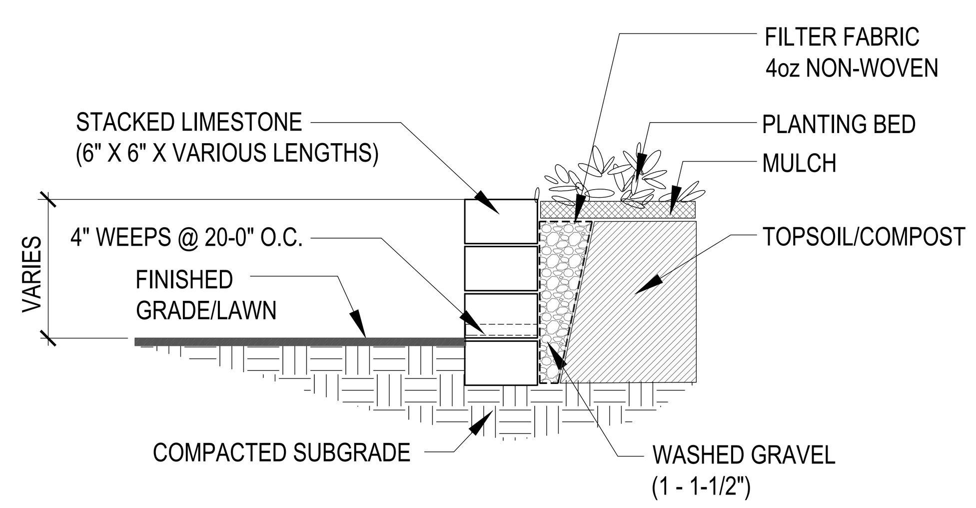

NOTE: PLANTER EDGE TO BE STACKED TO ELEVATIONS AS SHOWN ON PLANS (APPLY MASONRY ADHESIVE BETWEEN EACH COURSE OF BLOCK)

1 STACKED STONE EDGE DETAIL
NOT TO SCALE

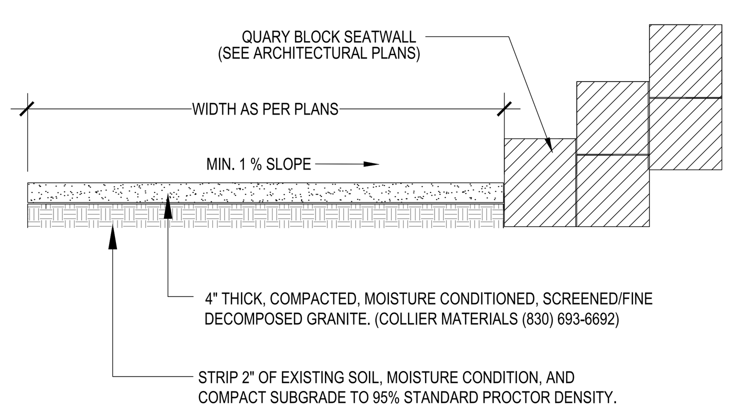

NOTES:

1. CONCRETE CURBING TO HAVE 1 1/2" DEEP CONTRACTION JOINTS @ 5'-0" SPACING.
2. CONCRTE CURBING TO HAVE TAPERED DRAINAGE POINTS AT 10' O.C.
3. 2500-3000 PSI COMPRESSIVE STRENGTH, 490 PSI FLEXURAL STRENGTH.
4. USE HALF-INCH POLYPROPYLENE FIBER REINFORCEMENT.
5. NATURAL FINISH AND COLOR.
6. EQUAL TO 'CURB APPEAL' EDGING (956-867-8350).

2 DECOMPOSED GRANITE DETAIL
NOT TO SCALE

NOTE:

1. S = SPACING, (REFER PLANT LIST FOR AMOUNT 0F SPACING.)
2. USE SPACING LAYOUT FOR SHRUBS, GROUNDCOVERS AND ANNUALS.

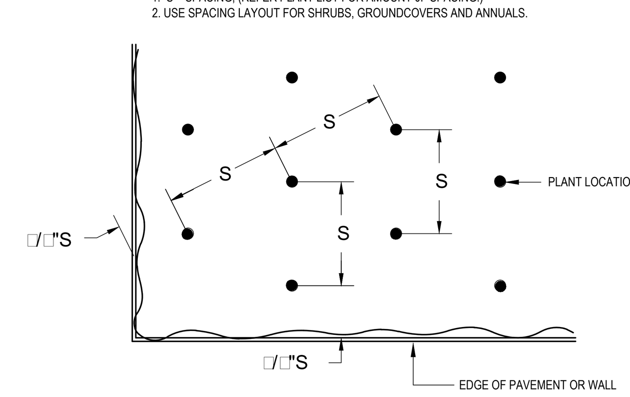

3 TRIANGULAR PLANT SPACING DIAGRAM
NOT TO SCALE

NOTE:
CONTRACTOR TO STAKE ALL PALMS PER THIS DETAIL UNLESS OTHERWISE NOTED.

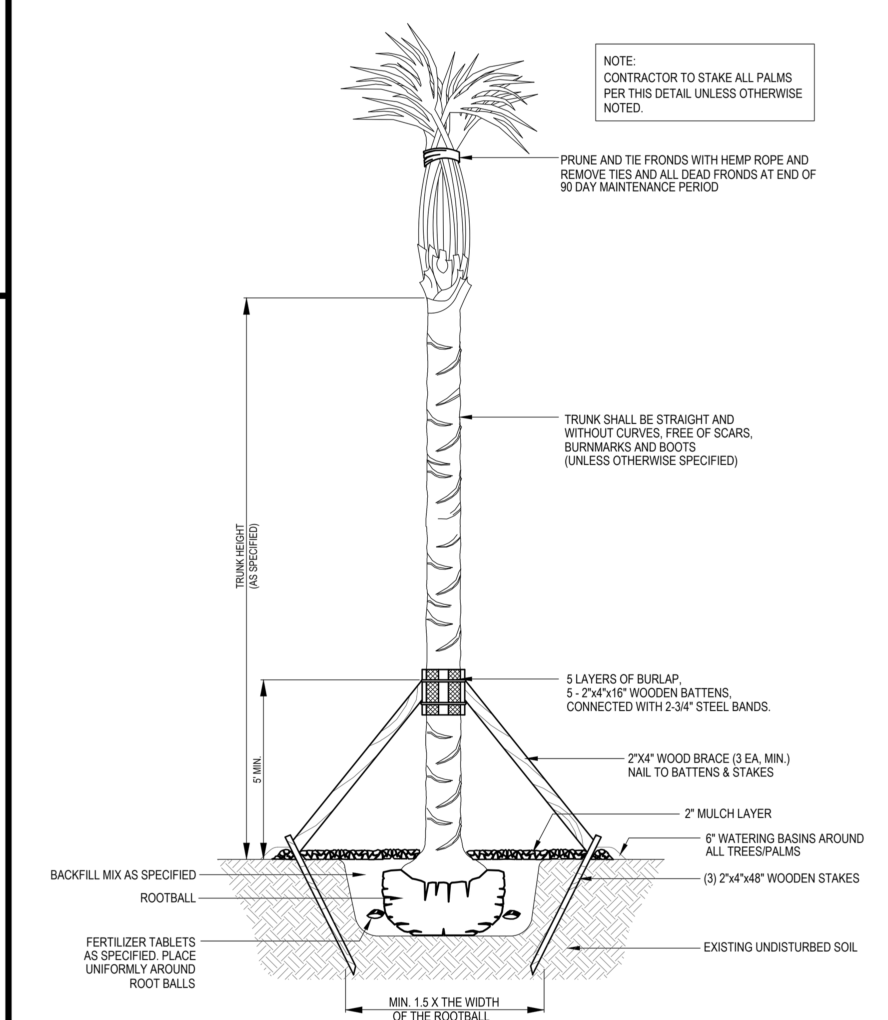

7 PALM PLANTING DETAIL
NOT TO SCALE

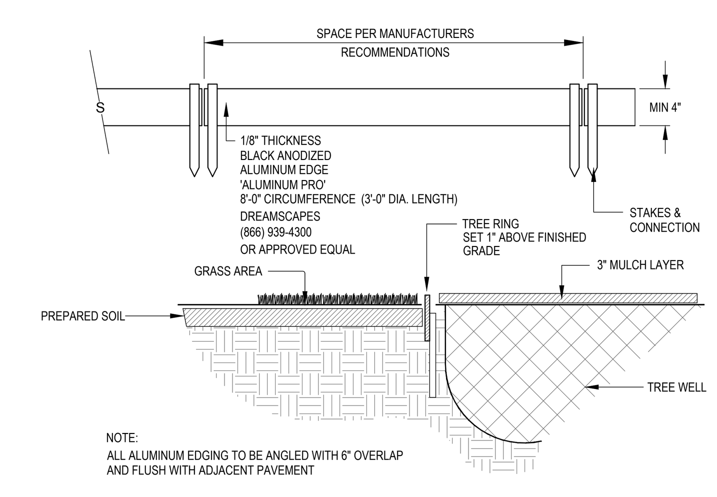

NOTE:
ALL ALUMINUM EDGING TO BE ANGLED WITH 6" OVERLAP AND FLUSH WITH ADJACENT PAVEMENT

4 TREE RING DETAIL
NOT TO SCALE

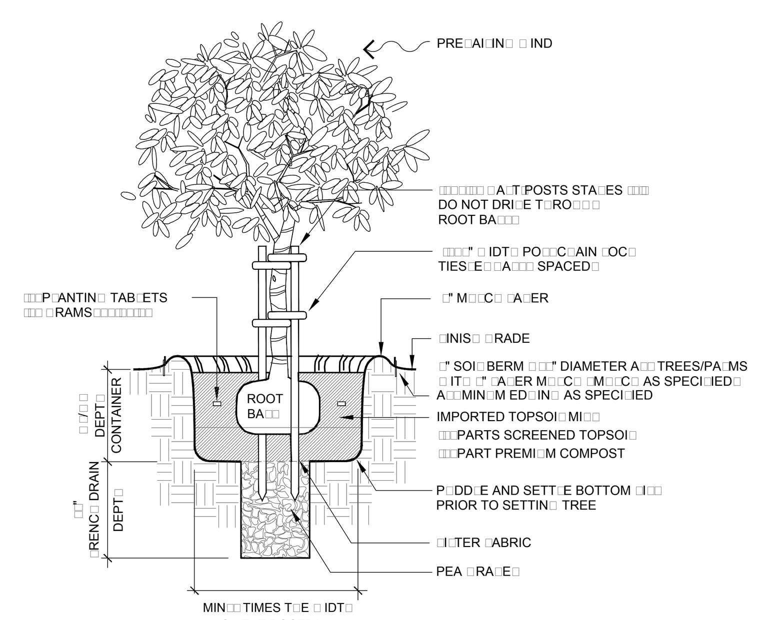

5 TREE PLANTING DETAIL
NOT TO SCALE

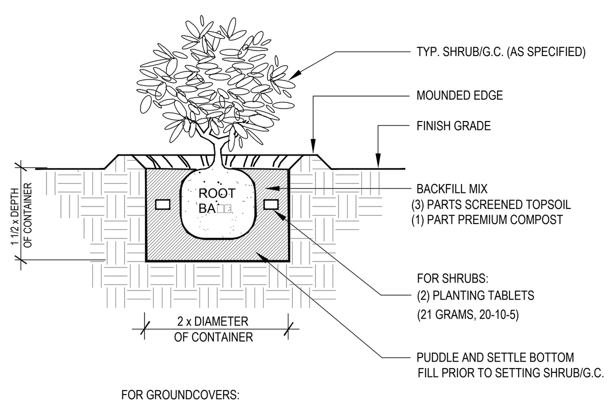

FOR GROUNDCOVERS:
13-13-13 OSMOCOTE SLOW RELEASE

6 SHRUB/G.C. PLANTING DETAIL
NOT TO SCALE

muñoz & company
1017 NORTH MAIN SUITE 300
SAN ANTONIO, TEXAS 78212
O. 210.349.1163 F. 210.525.1038
WWW.MUNOZ-CO.COM

REGISTERED LANDSCAPE ARCHITECT STEVEN M. RA 1600 STATE OF TEXAS
11/08/18

smr
landscape architecture

SSP Design
789 EAST WASHINGTON STREET
BROWNSVILLE, TEXAS 78520
TEL(956) 547-9788
FAX(956) 547-9977
SPAJESKI@SSPDESIGN.COM

UTRGV
The University of Texas Rio Grande Valley

UNIVERSITY OF TEXAS RIO GRANDE VALLEY
SCHOOL OF MEDICINE
TEAM BASED LEARNING CENTER
PROJECT NO: 903-1159
EDINBURG, TX
100% CONSTRUCTION DOCUMENTS

Issue/Revision

#	DESCRIPTION	DATE

Sheet Title
LANDSCAPE SCHEDULES AND DETAILS

Date **NOVEMBER 08, 2018**

Project Number	Drawn By	Checked By
A17021.00	PLM	SSP

Sheet Number
L3.01

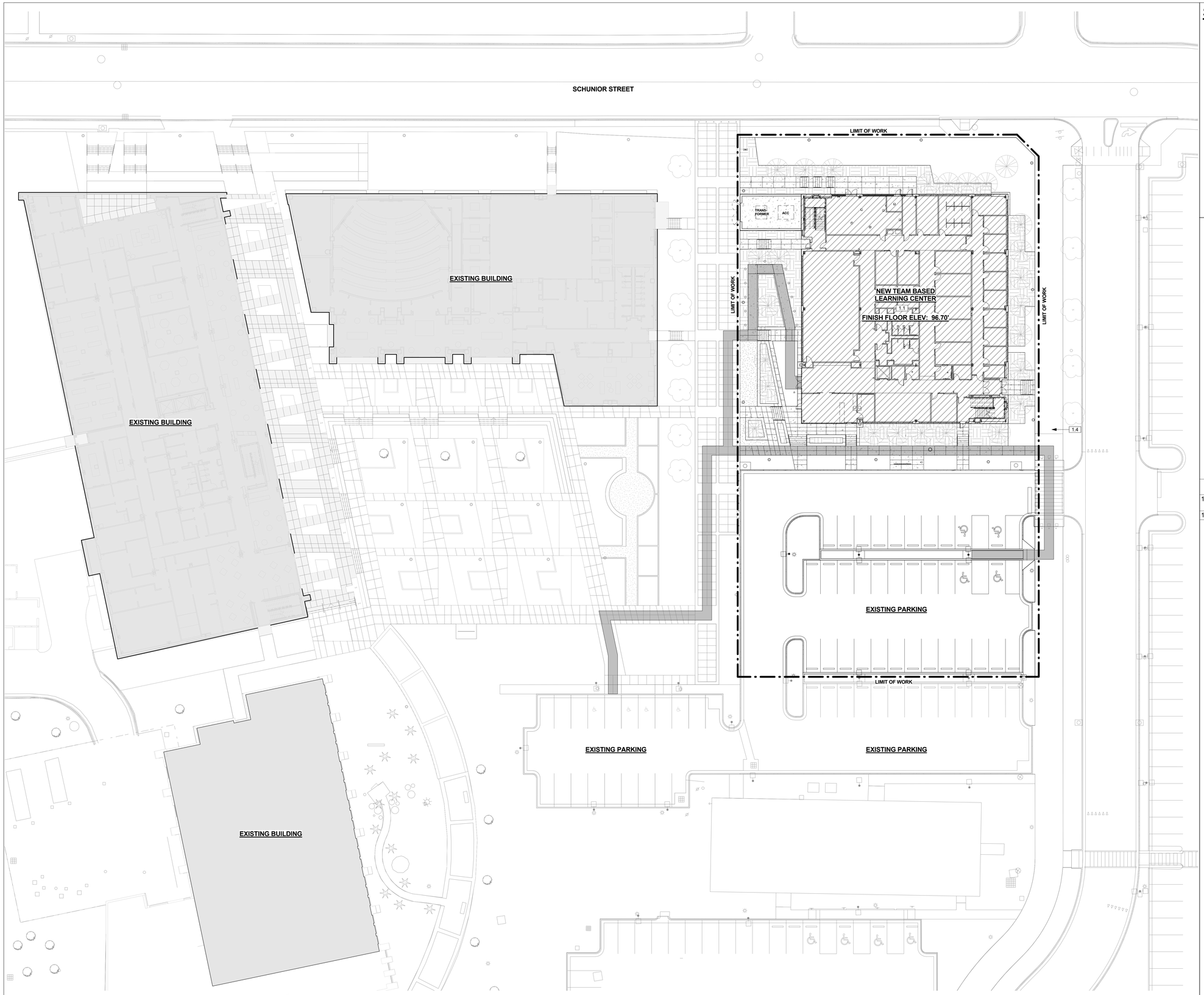

1 **OVERALL SITE PLAN**
1" = 20'-0"

SITE GENERAL NOTES

1. REFER TO SURVEY SHEETS FOR EXISTING CONDITIONS.FIELD VERIFY UNDERGROUND UTILITIES. CONTRACTOR TO FIELD VERIFY ALL EXISTING SITE DIMENSIONS AND CONDITIONS.
2. REFER TO CIVIL DRAWINGS FOR NEW GRADING AND NEW BUILDING FINISH FLOOR ELEVATION.
3. REFER TO CIVIL DRAWINGS FOR NEW BUILDING AND NEW CURBS LOCATIONS.
4. REFER TO CIVIL AND MECH. DRAWINGS FOR NEW SITE UTILITIES.
5. REFER TO LANDSCAPE DRAWINGS FOR NEW LANDSCAPE AND NEW IRRIGATION.
6. REFER TO M.E.P. FOR SITE LIGHTING INFORMATION.
7. ALL WALKS TO BE 4" CONCRETE, REINFORCED W/ #3 BARS AT 12" O.C. EACH WAY.
8. MAX. SIDEWALK CROSS SLOPE OF 2%.
9. AT SIDEWALKS, MOWSTRIP, CONCRETE PAVER EDGE CURBS. PROVIDE CONTROL JOINTS 10'-0" O.C. OR AS INDICATED ON PLANS, AND EXPANSION JOINTS AT 40'-0" O.C. MAX.
10. FLUSH IMBEDDED CONCRETE PAVER TO TOP OF CONCRETE WALK. IMBEDS TO MEET ADA REQUIREMENTS.
11. TYP. RECESS FOR CONCRETE PAVER IMBEDS IS 2 1/2" MIN. CONTRACTOR TO VERIFY DEPTH WITH SELECTED MATERIALS.

SITE LEGEND

- CONCRETE WALK
- CONCRETE PAVERS
- EXISTING TREE, RE: LANDSCAPE
- NEW PLANTING, RE: LANDSCAPE
- PL NEW POLE MOUNTED LIGHT, RE: ELEC.
- BL NEW BOLLARD MOUNTED LIGHT, RE: ELEC.
- ACCESSIBLE ROUTE
- CL NEW CANOPY LIGHT, RE: ELEC.
- UL NEW GARDEN LIGHT, RE: ELEC.
- PLANTING AREA

KEYNOTE LEGEND

1.1	NEW BUILDING - PREP SITE FOR NEW CONSTRUCTION
1.4	EXISTING CONCRETE WALK

muñoz & company
1017 NORTH MAIN SUITE 300
SAN ANTONIO, TEXAS 78212
O. 210.349.1163 F. 210.525.1038
WWW.MUNOZ-CO.COM

REGISTERED ARCHITECT
GEOF EDWARDS
18803
STATE OF TEXAS
11.08.18

UTRGV
The University of Texas Rio Grande Valley

UNIVERSITY OF TEXAS RIO GRANDE VALLEY
SCHOOL OF MEDICINE
TEAM BASED LEARNING CENTER
PROJECT NO: 903-1159
EDINBURG, TX
100% CONSTRUCTION DOCUMENTS

Issue/Revision

#	DESCRIPTION	DATE

Sheet Title
OVERALL SITE PLAN

Date
NOVEMBER 08, 2018

Project Number	Drawn By	Checked By
A17021.00	RL	CC

Sheet Number
A-101

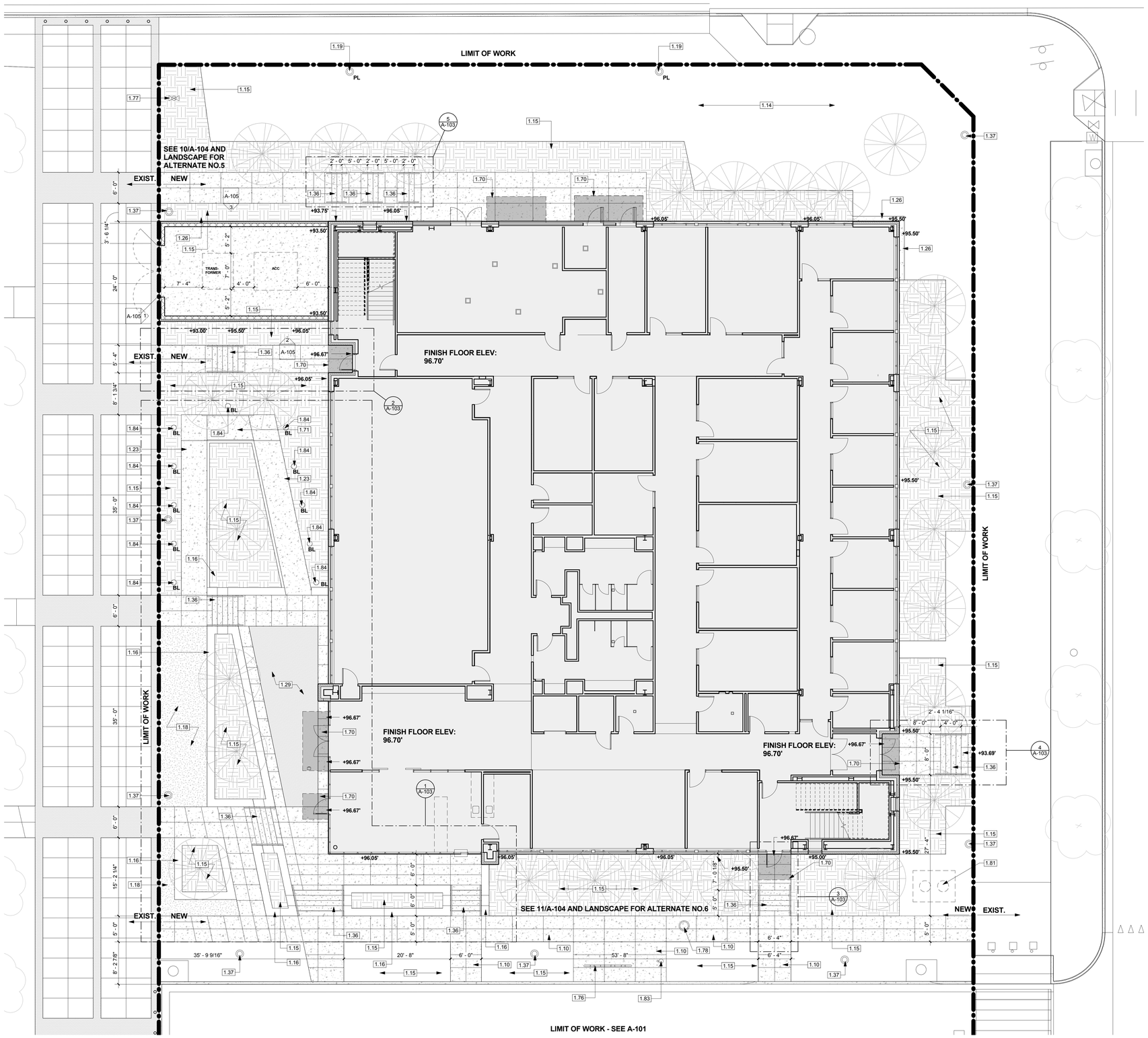

1 **SITE PLAN**
1/8" = 1'-0"

TRUE NORTH
PLAN NORTH

SITE GENERAL NOTES

1. REFER TO SURVEY SHEETS FOR EXISTING CONDITIONS.FIELD VERIFY UNDERGROUND UTILITIES. CONTRACTOR TO FIELD VERIFY ALL EXISTING SITE DIMENSIONS AND CONDITIONS.

2. REFER TO CIVIL DRAWINGS FOR NEW GRADING AND NEW BUILDING FINISH FLOOR ELEVATION.

3. REFER TO CIVIL DRAWINGS FOR NEW BUILDING AND NEW CURBS LOCATIONS.

4. REFER TO CIVIL AND MECH. DRAWINGS FOR NEW SITE UTILITIES.

5. REFER TO LANDSCAPE DRAWINGS FOR NEW LANDSCAPE AND NEW IRRIGATION.

6. REFER TO M.E.P. FOR SITE LIGHTING INFORMATION.

7. ALL WALKS TO BE 4" CONCRETE, REINFORCED W/ #3 BARS AT 12" O.C. EACH WAY.

8. MAX. SIDEWALK CROSS SLOPE OF 2%.

9. AT SIDEWALKS, MOWSTRIP, CONCRETE PAVER EDGE CURBS. PROVIDE CONTROL JOINTS 10'-0" O.C. OR AS INDICATED ON PLANS, AND EXPANSION JOINTS AT 40'-0" O.C. MAX.

10. FLUSH IMBEDDED CONCRETE PAVER TO TOP OF CONCRETE WALK. IMBEDS TO MEET ADA REQUIREMENTS.

11. TYP. RECESS FOR CONCRETE PAVER IMBEDS IS 2 1/2" MIN. CONTRACTOR TO VERIFY DEPTH WITH SELECTED MATERIALS.

muñoz & company
1017 NORTH MAIN SUITE 300
SAN ANTONIO, TEXAS 78212
O. 210.349.1163 F. 210.525.1038
W W W . M U N O Z - C O . C O M

SITE LEGEND

- CONCRETE WALK
- CONCRETE PAVERS
- EXISTING TREE, RE: LANDSCAPE
- NEW PLANTING, RE: LANDSCAPE
- PL NEW POLE MOUNTED LIGHT, RE: ELEC.
- BL NEW BOLLARD MOUNTED LIGHT, RE: ELEC.
- STRUCTURAL STOOP, REFER TO STRUCT.
- CL NEW CANOPY LIGHT, RE: ELEC.
- UL NEW GARDEN LIGHT, RE: ELEC.
- PLANTING AREA

REGISTERED ARCHITECT
ROGER EDWARDS
18803
STATE OF TEXAS
11.08.18

UTRGV
The University of Texas Rio Grande Valley

KEYNOTE LEGEND

1.10	CONCRETE WALK - SEE 1/A104-PROVIDE SAW CUT CONTROL JOINTS AS SHOWN ON PLAN
1.14	SOD AREA, REF. TO LANDSCAPE
1.15	PLANTING AREA, RE: LANDSCAPE
1.16	STONE BLOCK SEAT WALL
1.18	DECOMPOSED GRANITE
1.19	NEW LIGHT POLE
1.23	CONCRETE SLOPED WALKWAY
1.26	CONCRETE MOW STRIP, TYP. REFER TO 3/A-104.
1.29	CONCRETE PAVERS 4x8 PAVER TO MATCH EXISTING COLOR, SEE DETAIL 1/A-104, REFER TO LANDSCAPE
1.36	CONCRETE STAIR, REF. TO CIVIL
1.37	EXISTING LIGHT POLE
1.70	STRUCTURAL STOOP, REF. STRUCT.
1.71	CONCRETE RAMP – 1:12 MAX SLOPE
1.76	BICYCLE RACK, MATCH CAMPUS STANDARDS, SEE DETAIL 4/A-104
1.77	EXISTING FIRE HYDRANT TO REMAIN
1.78	EXISTING SANITARY SEWER CLEANOUT LID TO BE REPLACED, REFER TO CIVIL
1.81	GREASE INTERCEPTOR, SEE ALTERNATE NO.4
1.83	FLOOR MOUNTED BICYCLE SERVICE STATION
1.84	BOLLARD LIGHT, REFER TO ELECTRICAL

UNIVERSITY OF TEXAS RIO GRANDE VALLEY
SCHOOL OF MEDICINE
TEAM BASED LEARNING CENTER

PROJECT NO: 903-1159
EDINBURG, TX
100% CONSTRUCTION DOCUMENTS

Issue/Revision

#	DESCRIPTION	DATE

Sheet Title
SITE PLAN

Date
NOVEMBER 08, 2018

Project Number	Drawn By	Checked By
A17021.00	RL	CC

Sheet Number
A-102

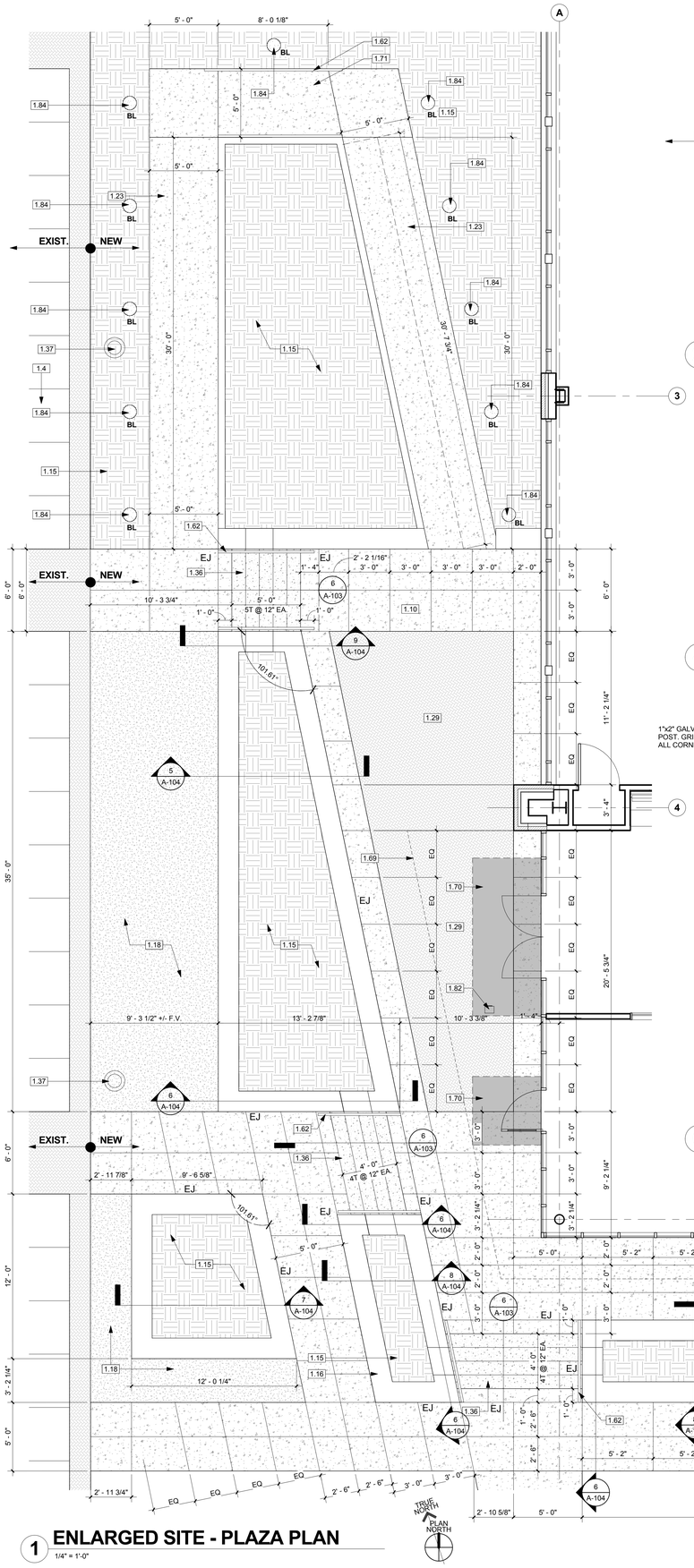

1 ENLARGED SITE - PLAZA PLAN
1/4" = 1'-0"

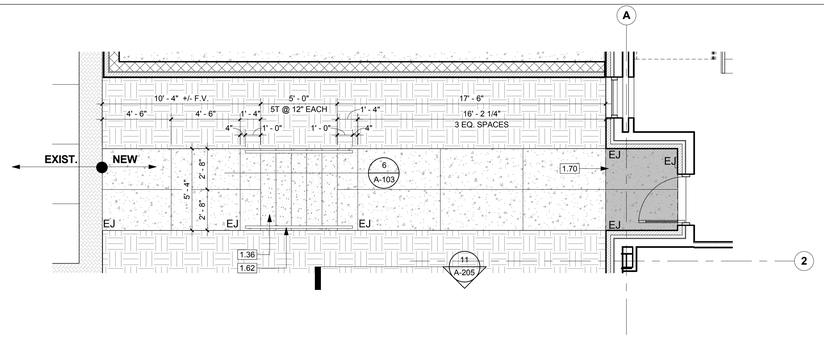

2 ENLARGED SITE - STAIR PLAN
1/4" = 1'-0"

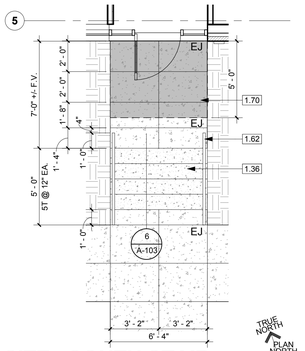

3 ENLARGED SITE - SOUTH STAIR
1/4" = 1'-0"

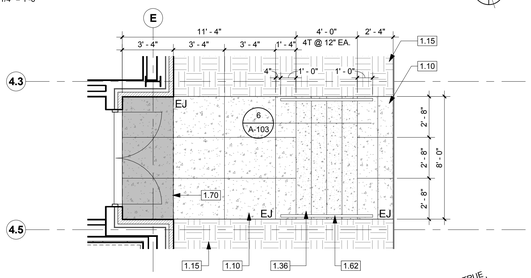

4 ENLARGED SITE - EAST STAIR
1/4" = 1'-0"

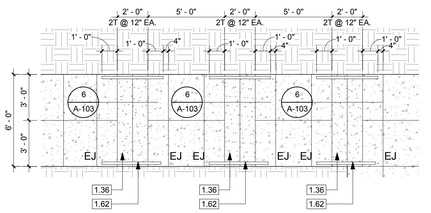

5 ENLARGED SITE - NORTH STAIR
1/4" = 1'-0"

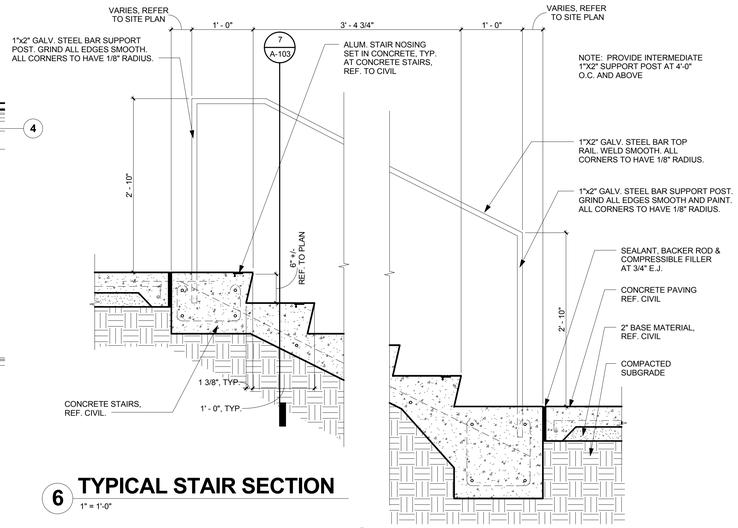

6 TYPICAL STAIR SECTION
1" = 1'-0"

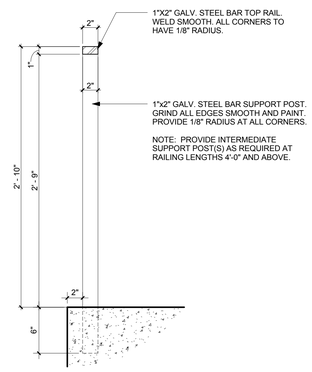

7 RAILING DETAIL
1 1/2" = 1'-0"

SITE GENERAL NOTES

1. REFER TO SURVEY SHEETS FOR EXISTING CONDITIONS.FIELD VERIFY UNDERGROUND UTILITIES. CONTRACTOR TO FIELD VERIFY ALL EXISTING SITE DIMENSIONS AND CONDITIONS.

2. REFER TO CIVIL DRAWINGS FOR NEW GRADING AND NEW BUILDING FINISH FLOOR ELEVATION.

3. REFER TO CIVIL DRAWINGS FOR NEW BUILDING AND NEW CURBS LOCATIONS.

4. REFER TO CIVIL AND MECH. DRAWINGS FOR NEW SITE UTILITIES.

5. REFER TO LANDSCAPE DRAWINGS FOR NEW LANDSCAPE AND NEW IRRIGATION.

6. REFER TO M.E.P. FOR SITE LIGHTING INFORMATION.

7. ALL WALKS TO BE 4" CONCRETE, REINFORCED W/ #3 BARS AT 12" O.C. EACH WAY.

8. MAX. SIDEWALK CROSS SLOPE OF 2%.

9. AT SIDEWALKS, MOWSTRIP, CONCRETE PAVER EDGE CURBS. PROVIDE CONTROL JOINTS 10'-0" O.C. OR AS INDICATED ON PLANS, AND EXPANSION JOINTS AT 40'-0" O.C. MAX.

10. FLUSH IMBEDDED CONCRETE PAVER TO TOP OF CONCRETE WALK. IMBEDS TO MEET ADA REQUIREMENTS.

11. TYP. RECESS FOR CONCRETE PAVER IMBEDS IS 2 1/2" MIN. CONTRACTOR TO VERIFY DEPTH WITH SELECTED MATERIALS.

muñoz & company
1017 NORTH MAIN SUITE 300
SAN ANTONIO, TEXAS 78212
O. 210.349.1163 F. 210.525.1038
W W W . M U N O Z - C O . C O M

SITE LEGEND

- CONCRETE WALK
- CONCRETE PAVERS
- EXISTING TREE, RE: LANDSCAPE
- NEW PLANTING, RE: LANDSCAPE
- PL NEW POLE MOUNTED LIGHT, RE: ELEC.
- BL NEW BOLLARD MOUNTED LIGHT, RE: ELEC.
- ACCESSIBLE ROUTE
- CL NEW CANOPY LIGHT, RE: ELEC.
- UL NEW GARDEN LIGHT, RE: ELEC.
- PLANTING AREA

REGISTERED ARCHITECT
ROY EDWARD GALVAN
18803
STATE OF TEXAS
11.08.18

UTRGV
The University of Texas Rio Grande Valley

KEYNOTE LEGEND	
1.4	EXISTING CONCRETE WALK
1.10	CONCRETE WALK - SEE 1/A104-PROVIDE SAW CUT CONTROL JOINTS AS SHOWN ON PLAN
1.15	PLANTING AREA, RE: LANDSCAPE
1.16	STONE BLOCK SEAT WALL
1.18	DECOMPOSED GRANITE
1.23	CONCRETE SLOPED WALKWAY
1.26	CONCRETE MOW STRIP, TYP. REFER TO 3/A-104.
1.29	CONCRETE PAVERS 4x8 PAVER TO MATCH EXISTING COLOR, SEE DETAIL 1/A-104, REFER TO LANDSCAPE
1.36	CONCRETE STAIR, REF. TO CIVIL
1.37	EXISTING LIGHT POLE
1.62	FLOOR MOUNTED GALVANIZED STEEL BAR HAND RAIL, 2'-10" A.F.F., SEE 6/A-103
1.69	PREMANUFACTURED ALUMNINUM CANOPY ABOVE
1.70	STRUCTURAL STOOP, REF. STRUCT.
1.71	CONCRETE RAMP – 1:12 MAX SLOPE
1.82	POST MOUNTED PUSH PLATE FOR POWER DOOR OPENER AND CARD READER, MOUNTED AT 42" AFF TO TOP OF CARD READER
1.84	BOLLARD LIGHT, REFER TO ELECTRICAL

UNIVERSITY OF TEXAS RIO GRANDE VALLEY
SCHOOL OF MEDICINE
TEAM BASED LEARNING CENTER
PROJECT NO: 903-1159
EDINBURG, TX
100% CONSTRUCTION DOCUMENTS

Issue/Revision

#	DESCRIPTION	DATE

Sheet Title
ENLARGED SITE PLANS AND SITE DETAILS

Date
NOVEMBER 08, 2018

Project Number	Drawn By	Checked By
A17021.00	RL	CC

Sheet Number
A-103

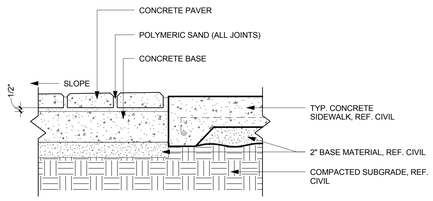

1 PAVERS AT CONC. DETAIL
1 1/2" = 1'-0"

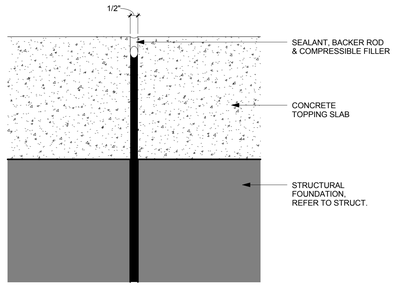

2 1/2" E.J. DETAIL
3" = 1'-0"

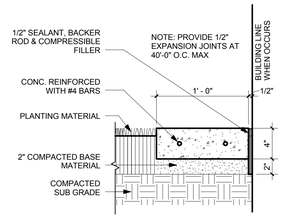

3 TYP. MOW STRIP
1 1/2" = 1'-0"

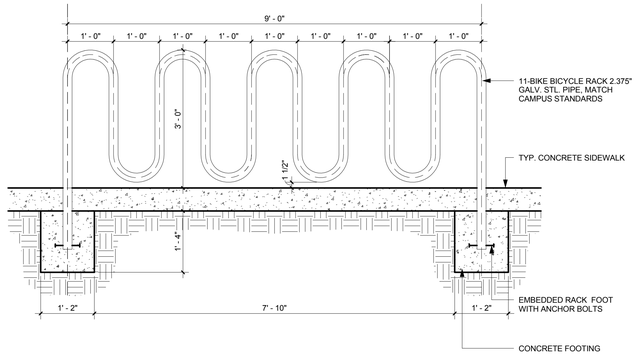

4 BICYCLE RACK
3/4" = 1'-0"

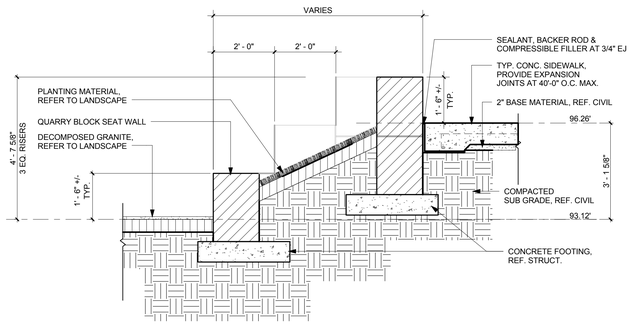

5 SEAT WALL DETAIL
1/2" = 1'-0"

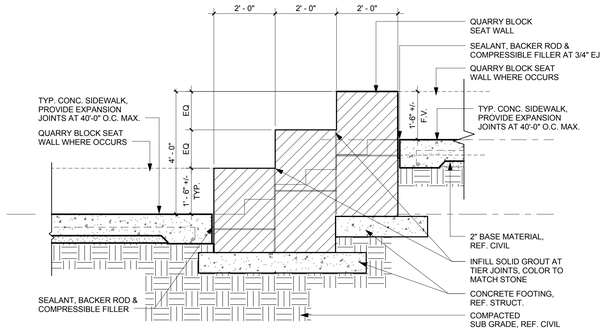

6 SEAT WALL DETAIL
1/2" = 1'-0"

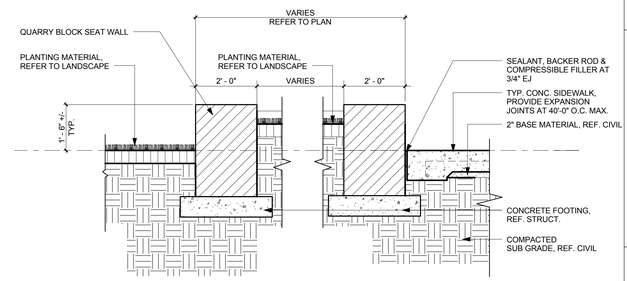

7 SEAT WALL DETAIL
1/2" = 1'-0"

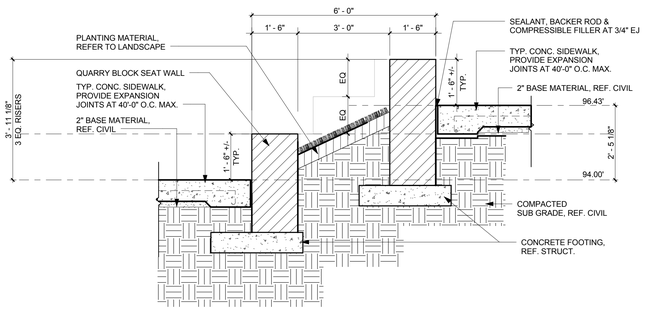

8 SEAT WALL DETAIL
1/2" = 1'-0"

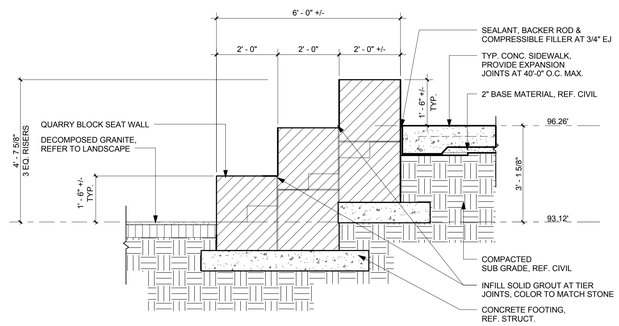

9 SEAT WALL DETAIL
1/2" = 1'-0"

KEYNOTE LEGEND	
1.10	CONCRETE WALK - SEE 1/A104-PROVIDE SAW CUT CONTROL JOINTS AS SHOWN ON PLAN
1.15	PLANTING AREA, RE: LANDSCAPE
1.16	STONE BLOCK SEAT WALL
1.36	CONCRETE STAIR, REF. TO CIVIL
1.37	EXISTING LIGHT POLE
1.56	FLOOR MOUNTED GALVANIZED STEEL BAR GUARDRAIL
1.62	FLOOR MOUNTED GALVANIZED STEEL BAR HAND RAIL, 2'-10" A.F.F., SEE 6/A-103
1.70	STRUCTURAL STOOP, REF. STRUCT.
1.77	EXISTING FIRE HYDRANT TO REMAIN
1.78	EXISTING SANITARY SEWER CLEANOUT LID TO BE REPLACED, REFER TO CIVIL
1.79	CAST-IN-PLACE MONOLITHIC PERVIOUS CONCRETE PAVEMENT, GRASSCRETE OR SIMILAR, REFER TO LANDSCAPE AND SEE ALTERNATE NO.5
1.80	CONCRETE SLOPED WALKWAY WITH STONE WALL BORDER, REFER TO LANDSCAPE AND SEE ALTERNATE NO.6

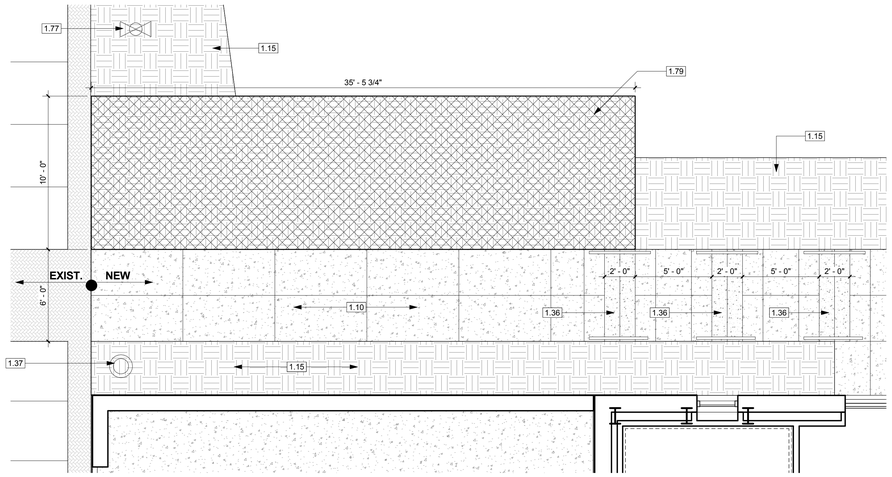

10 SITE PLAN - ALTERNATE NO. 5
1/4" = 1'-0"

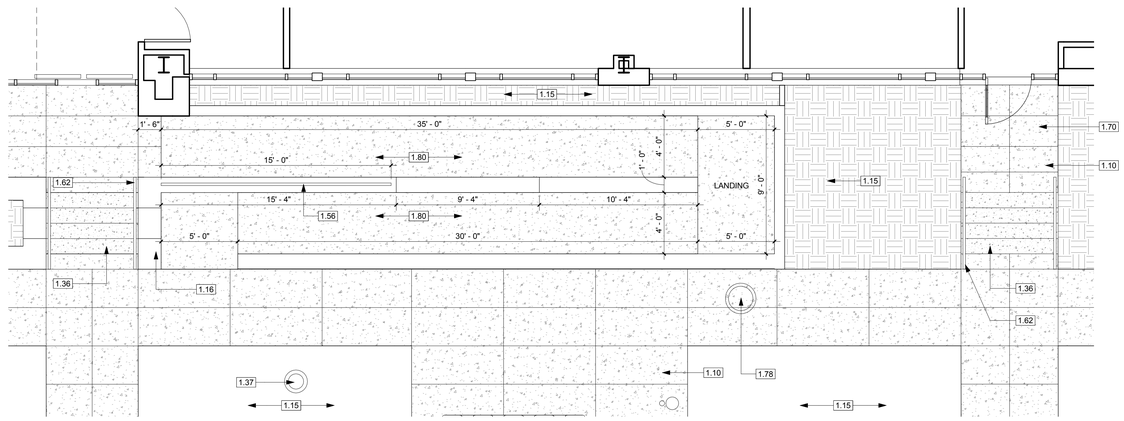

11 SITE PLAN - ALTERNATE NO. 6
1/4" = 1'-0"

muñoz & company
1017 NORTH MAIN SUITE 300
SAN ANTONIO, TEXAS 78212
O. 210.349.1163 F. 210.525.1038
W W W . M U N O Z - C O . C O M

REGISTERED ARCHITECT GREGORY EDWARDS 18803 STATE OF TEXAS

11.08.18

UTRGV
The University of Texas Rio Grande Valley

UNIVERSITY OF TEXAS RIO GRANDE VALLEY
SCHOOL OF MEDICINE
TEAM BASED LEARNING CENTER
PROJECT NO: 903-1159
EDINBURG, TX
100% CONSTRUCTION DOCUMENTS

Issue/Revision

#	DESCRIPTION	DATE

Sheet Title
SITE DETAILS AND SITE ALTERNATES

Date
NOVEMBER 08, 2018

Project Number	Drawn By	Checked By
A17021.00	RL	CC

Sheet Number
A-104

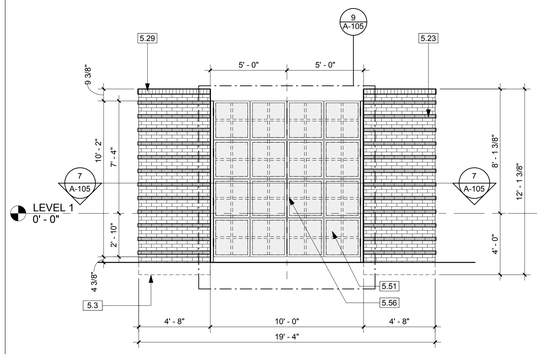

1 MECH. YARD SCREEN WALL - WEST
1/4" = 1'-0"

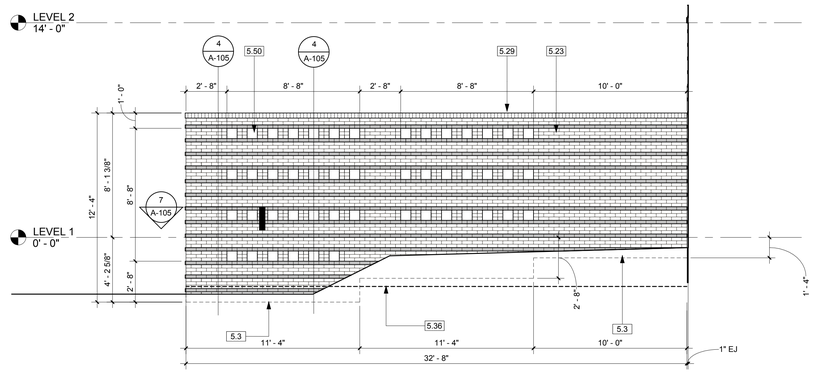

2 MECH. YARD SCREEN WALL - SOUTH
1/4" = 1'-0"

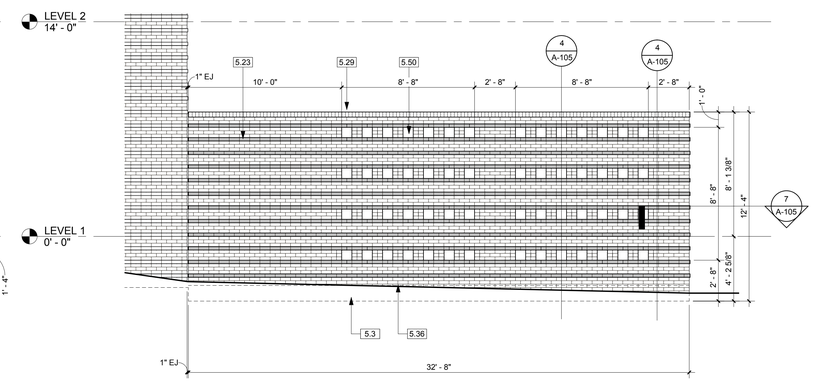

3 MECHANICAL YARD SCREEN WALL - NORTH
1/4" = 1'-0"

KEYNOTE LEGEND	
5.3	LINE OF BRICK LUG
5.23	MASONRY SCREEN WALL AT MECHANICAL YARD, FACE BRICK VENEER WITH PROJECTED BRICK PATTERN OVER CMU BACKUP WALL
5.29	ROWLOCK BRICK COURSE PARAPET CAP
5.36	SLAB LINE AT MECHANICAL YARD BEYOND
5.50	MASONRY OPENING PATTERN IN SCREEN WALL
5.51	PERFORATED METAL GATE, 16 GA. STEEL SHEET WITH CUSTOM PATTERN WELDED TO 2"X2" STEEL TUBE, KYNAR FINISH
5.56	HEAVY DUTY POST MOUNTED GATE HASP LATCH, FINISH TO MATCH GATE. PADLOCK BY OWNER

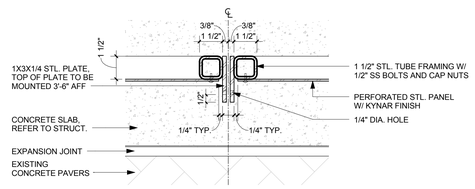

5 METAL GATE LATCH
3" = 1'-0"

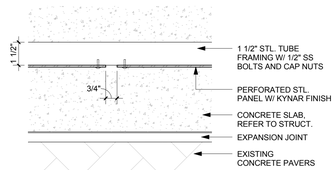

6 METAL PANEL CONNECTION
3" = 1'-0"

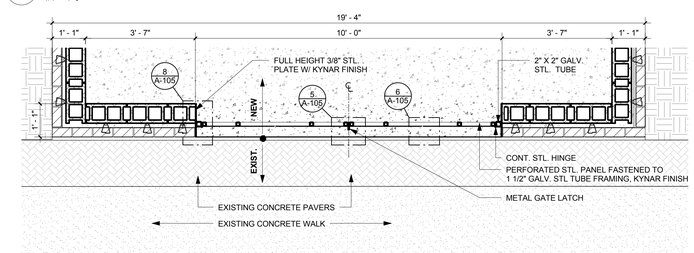

7 MECH. YARD SCREEN WALL ENLARGED PLAN
1/2" = 1'-0"

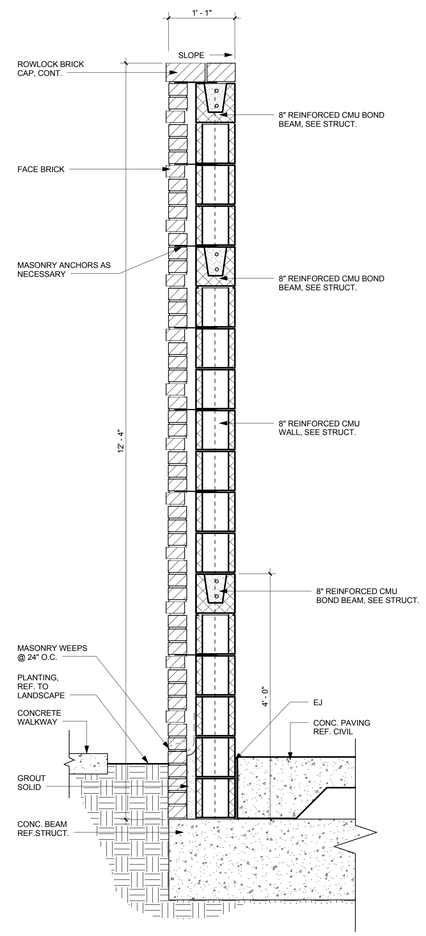

TYPICAL WALL SECTION

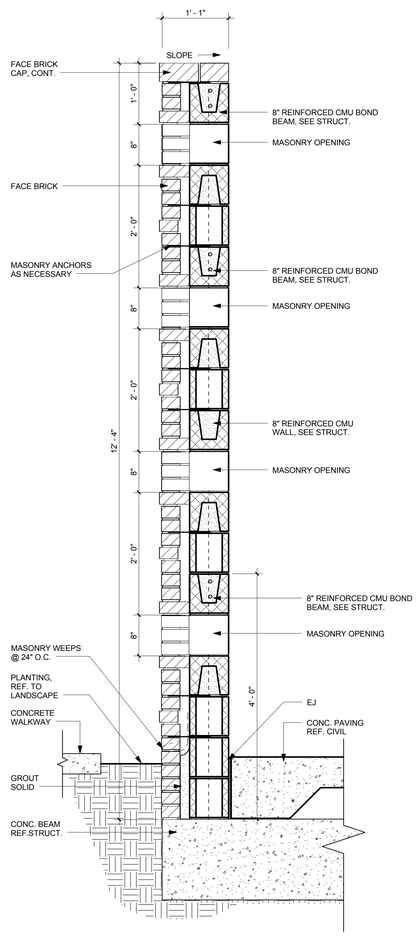

WALL SECTION AT MASONRY OPENINGS

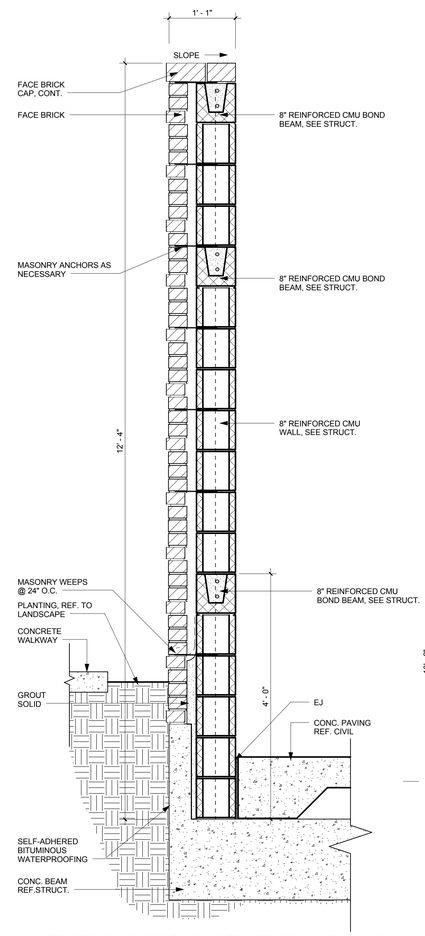

TYPICAL WALL SECTION AT LUG

4 MECHANICAL YARD SCREEN WALL SECTIONS
1" = 1'-0"

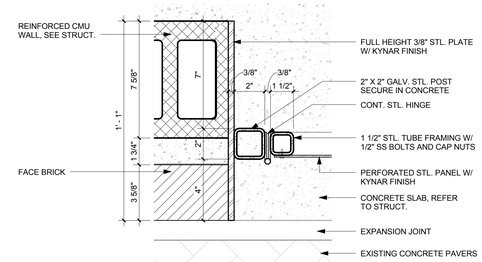

8 MECH. YARD SCREEN HINGE DETAIL
3" = 1'-0"

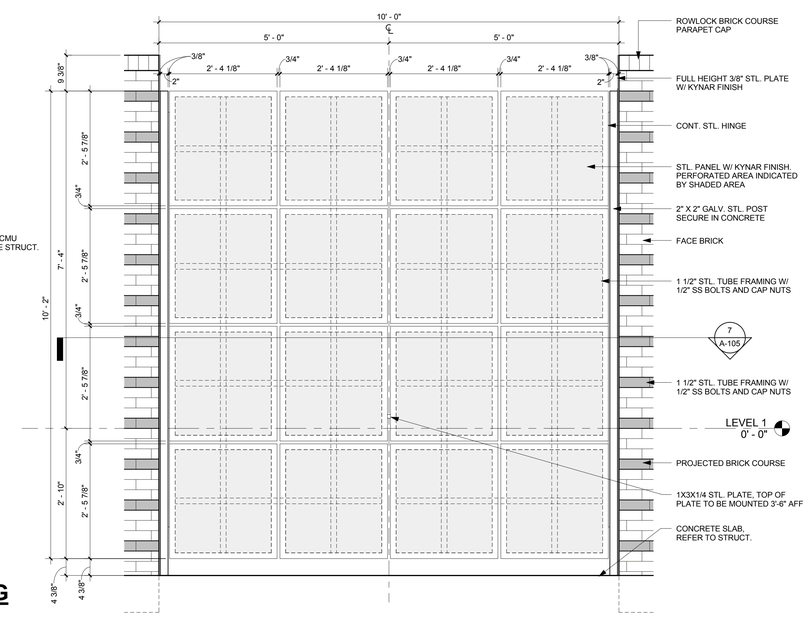

9 MECH. YARD SCREEN WALL - GATE ELEVATION
3/4" = 1'-0"

muñoz & company
1017 NORTH MAIN SUITE 300
SAN ANTONIO, TEXAS 78212
O. 210.349.1163 F. 210.525.1038
W W W . M U N O Z - C O . C O M

REGISTERED ARCHITECT ROGER EDWARDS 18803 STATE OF TEXAS

11.08.18

UTRGV
The University of Texas Rio Grande Valley

UNIVERSITY OF TEXAS RIO GRANDE VALLEY
SCHOOL OF MEDICINE
TEAM BASED LEARNING CENTER
PROJECT NO: 903-1159
EDINBURG, TX
100% CONSTRUCTION DOCUMENTS

Issue/Revision #	DESCRIPTION	DATE

Sheet Title
SITE DETAILS

Date
NOVEMBER 08, 2018

Project Number	Drawn By	Checked By
A17021.00	RL	CC

Sheet Number
A-105

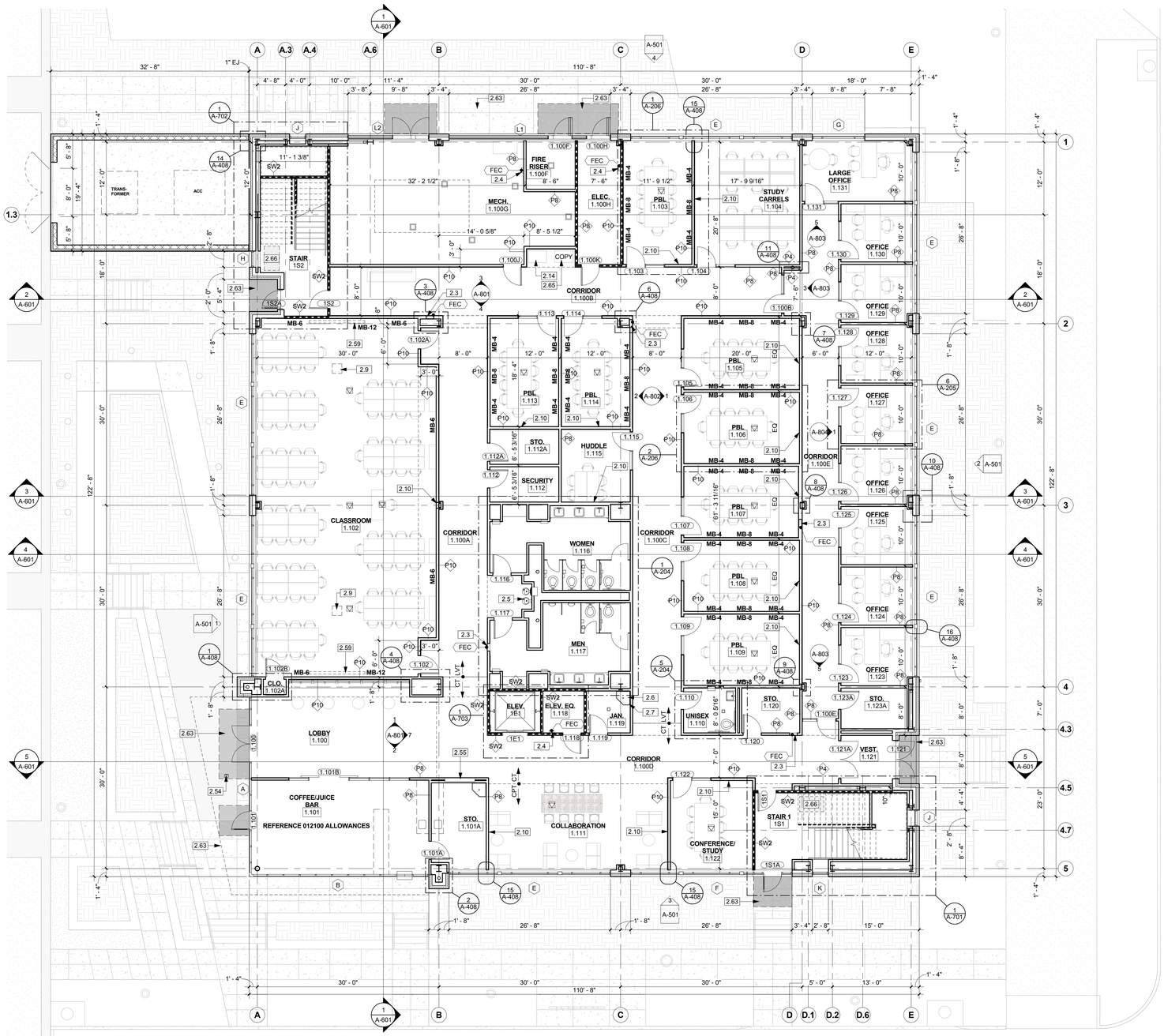

1 **LEVEL ONE FLOOR PLAN**

1/8" = 1'-0"

FLOOR PLAN GENERAL NOTES

1. - - - - DASHED LINE INDICATES 1 HR RATED PARTITION REFER TO CEILING PLAN FOR WALLS THAT EXTEND TO STRUCTURE.

2. TYPICAL DRYWALL PARTITION AT CLASSROOMS AND CONFERENCE ROOMS IS TYPE P10, 1 LAYER 5/8" GYP. BOARD ON ROOM SIDE AND 2 LAYERS GYP. BOARD ON CORRIDOR SIDE W/ 3 5/8" MTL. STUD 16" O.C. PROVIDE SOUND BATT INSULATION UNLESS NOTED OTHERWISE. REFER TO PARTITION SCHEDULE ON SHEET A-401.

3. TYPICAL ROOM DRYWALL PARTITION TO BE PARTITION TYPE P8 U.N.O. PROVIDE SOUND BATT INSUL. AT OFFICES, CONFERENCE ROOMS, CLASSROOMS AND STUDY SPACES. REFER TO PARTITION SCHEDULE ON SHEET A-401.

4. PROVIDE COLUMN FURRING PARTITION TYPE P3 AT ALL COLUMNS UNLESS U.N.O. REFER TO PARTITION SCHEDULE ON SHEET A-401.

5. REFER TO SHEET A-401 FOR ROOM FINISH SCHEDULE.

6. REFER TO SHEET A-402 FOR DOOR SCHEDULE.

7. REFER TO SHEET A-403 FOR WINDOW SCHEDULE, WINDOW NOTES AND WINDOW TYPE.

8. TYPICAL CHASE WALL TO BE DRYWALL PARTITION TYPE SW2, 1 HR RATED, FLOOR TO STRUCTURE. REFER TO PARTITION SCHEDULE ON SHEET A-401.

9. ALL CMU IS 8" THICK U.N.O.

10. REFER TO SHEET A-101 FOR SITE INFORMATION.

11. REFER TO ELEVATIONS FOR BRICK CONTROL JOINTS.

12. REFER TO A-401 FOR MOUNTING HEIGHT SCHEDULE.

13. PROVIDE WINDOW SHADES TYPICAL AT ALL WINDOWS EXCEPT CORRIDOR LOCATIONS. REFER TO A-403 FOR ROLLER SHADE SCHEDULE.

14. INTERIOR STAIR WALLS TO BE P8, 1 HR RATED, UNLESS NOTED OTHERWISE.

15. ELECTRICAL BOXES ARE TO BE STAGGERED 16" MIN. NOT BACK TO BACK.

16. PROVIDE CORNER GUARDS AT ALL OUTSIDE CORNERS ALONG GENERAL CIRCULATION PATHS OF CORRIDORS AND LOBBIES. REFER TO DETAIL 5/A-801.

FLOOR BOX AS SPECIFIED. FINAL LOCATION TO BE VERIFIED WITH ARCHITECT PRIOR TO INSTALLATION

CONCRETE TOPPING SLAB

KEYNOTE LEGEND

2.3	FULLY-RECESSED FIRE EXTINGUISHER CABINET, SEE DETAIL 4/A-804
2.4	BRACKET MOUNTED FIRE EXTINGUISHER, SEE DETAIL 3/A-804
2.5	DRINKING FOUNTAIN WITH BOTTLE FILLING STATION, REF. TO PLUMBING
2.6	FLOOR MOP SINK, REF. TO PLUMBING
2.7	UTILITY SHELF WITH MOP/BROOM HOLDERS, SEE TOILET ACCESSORIES SCHEDULE A-204
2.9	CEILING MOUNTED PROJECTOR MOUNT, OWNER FURNISHED CONTRACTOR INSTALLED. FINAL LOCATION OF MOUNT TO BE COORDINATED WITH OWNER
2.10	WALL MOUNTED FLAT SCREEN DISPLAY, N.I.C., REFER TO AV DRAWINGS FOR MORE INFORMATION
2.14	RECYCLING CONTAINERS, OWNER FURNISHED, OWNER INSTALLED
2.54	POST MOUNTED PUSH PLATE FOR POWER DOOR OPENER AND CARD READER, MOUNTED AT 42" AFF TO TOP OF CARD READER
2.55	FULLY RECESSED FLAT SCREEN DISPLAY
2.59	RECESSED DROP-DOWN PROJECTION SCREEN, REF. TO A/V & ELEC.
2.63	SHADED AREA INDICATES EXTENT OF INTEGRAL COLOR CONCRETE TOPPING SLAB
2.65	COPY MACHINE, OWNER FURNISHED OWNER INSTALLED
2.66	AREA OF REFUGE

muñoz & company
1017 NORTH MAIN SUITE 300
SAN ANTONIO, TEXAS 78212
O. 210.349.1163 F. 210.525.1038
W W W . M U N O Z - C O . C O M

REGISTERED ARCHITECT JOSEPH EDWARD MUÑOZ 18803 STATE OF TEXAS

11.08.18

UTRGV The University of Texas Rio Grande Valley

UNIVERSITY OF TEXAS RIO GRANDE VALLEY

SCHOOL OF MEDICINE TEAM BASED LEARNING CENTER

PROJECT NO: 903-1159

EDINBURG, TX

100% CONSTRUCTION DOCUMENTS

Issue/Revision

#	DESCRIPTION	DATE

Sheet Title

LEVEL ONE FLOOR PLAN

Date

NOVEMBER 08, 2018

Project Number	Drawn By	Checked By
A17021.00	RL	CC

Sheet Number

A-201

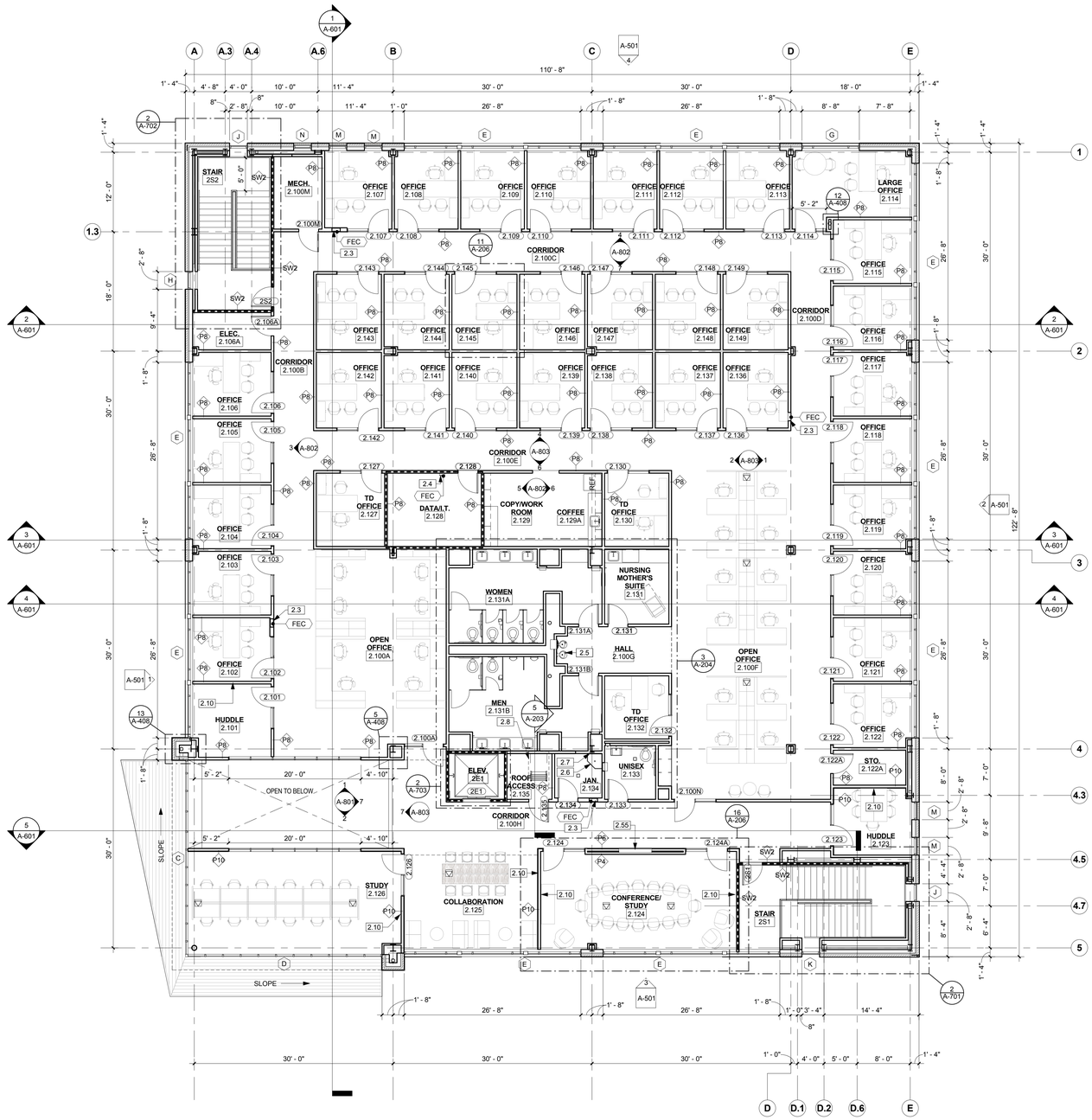

1 LEVEL TWO FLOOR PLAN

1/8" = 1'-0"

FLOOR PLAN GENERAL NOTES

1. - - - - DASHED LINE INDICATES 1 HR RATED PARTITION REFER TO CEILING PLAN FOR WALLS THAT EXTEND TO STRUCTURE.

2. TYPICAL DRYWALL PARTITION AT CLASSROOMS AND CONFERENCE ROOMS IS TYPE P10, 1 LAYER 5/8" GYP. BOARD ON ROOM SIDE AND 2 LAYERS GYP. BOARD ON CORRIDOR SIDE W/ 3 5/8" MTL. STUD 16" O.C. PROVIDE SOUND BATT INSULATION UNLESS NOTED OTHERWISE. REFER TO PARTITION SCHEDULE ON SHEET A-401.

3. TYPICAL ROOM DRYWALL PARTITION TO BE PARTITION TYPE P8 U.N.O. PROVIDE SOUND BATT INSUL. AT OFFICES, CONFERENCE ROOMS, CLASSROOMS AND STUDY SPACES. REFER TO PARTITION SCHEDULE ON SHEET A-401.

4. PROVIDE COLUMN FURRING PARTITION TYPE P3 AT ALL COLUMNS UNLESS U.N.O. REFER TO PARTITION SCHEDULE ON SHEET A-401.

5. REFER TO SHEET A-401 FOR ROOM FINISH SCHEDULE.

6. REFER TO SHEET A-402 FOR DOOR SCHEDULE.

7. REFER TO SHEET A-403 FOR WINDOW SCHEDULE, WINDOW NOTES AND WINDOW TYPE.

8. TYPICAL CHASE WALL TO BE DRYWALL PARTITION TYPE SW2, 1 HR RATED, FLOOR TO STRUCTURE. REFER TO PARTITION SCHEDULE ON SHEET A-401.

9. ALL CMU IS 8" THICK U.N.O.

10. REFER TO SHEET A-101 FOR SITE INFORMATION.

11. REFER TO ELEVATIONS FOR BRICK CONTROL JOINTS.

12. REFER TO A-401 FOR MOUNTING HEIGHT SCHEDULE.

13. PROVIDE WINDOW SHADES TYPICAL AT ALL WINDOWS EXCEPT CORRIDOR LOCATIONS. REFER TO A-403 FOR ROLLER SHADE SCHEDULE.

14. INTERIOR STAIR WALLS TO BE P8, 1 HR RATED, UNLESS NOTED OTHERWISE.

15. ELECTRICAL BOXES ARE TO BE STAGGERED 16" MIN. NOT BACK TO BACK.

16. PROVIDE CORNER GUARDS AT ALL OUTSIDE CORNERS ALONG GENERAL CIRCULATION PATHS OF CORRIDORS AND LOBBIES. REFER TO DETAIL 5/A-801.

FLOOR BOX AS SPECIFIED. FINAL LOCATION TO BE VERIFIED WITH ARCHITECT PRIOR TO INSTALLATION

CONCRETE TOPPING SLAB

KEYNOTE LEGEND

2.3	FULLY-RECESSED FIRE EXTINGUISHER CABINET, SEE DETAIL 4/A-804
2.4	BRACKET MOUNTED FIRE EXTINGUISHER, SEE DETAIL 3/A-804
2.5	DRINKING FOUNTAIN WITH BOTTLE FILLING STATION, REF. TO PLUMBING
2.6	FLOOR MOP SINK, REF. TO PLUMBING
2.7	UTILITY SHELF WITH MOP/BROOM HOLDERS, SEE TOILET ACCESSORIES SCHEDULE A-204
2.8	LINE OF ROOF HATCH ABOVE
2.10	WALL MOUNTED FLAT SCREEN DISPLAY, N.I.C., REFER TO AV DRAWINGS FOR MORE INFORMATION
2.55	FULLY RECESSED FLAT SCREEN DISPLAY

muñoz & company
1017 NORTH MAIN SUITE 300
SAN ANTONIO, TEXAS 78212
O. 210.349.1163 F. 210.525.1038
WWW.MUNOZ-CO.COM

REGISTERED ARCHITECT GREGORY EDWARDS 18803 STATE OF TEXAS

11.08.18

UTRGV The University of Texas Rio Grande Valley

UNIVERSITY OF TEXAS RIO GRANDE VALLEY
SCHOOL OF MEDICINE
TEAM BASED LEARNING CENTER

PROJECT NO: 903-1159

EDINBURG, TX

100% CONSTRUCTION DOCUMENTS

Issue/Revision

#	DESCRIPTION	DATE

Sheet Title
LEVEL TWO FLOOR PLAN

Date
NOVEMBER 08, 2018

Project Number	Drawn By	Checked By
A17021.00	RL	CC

Sheet Number
A-202

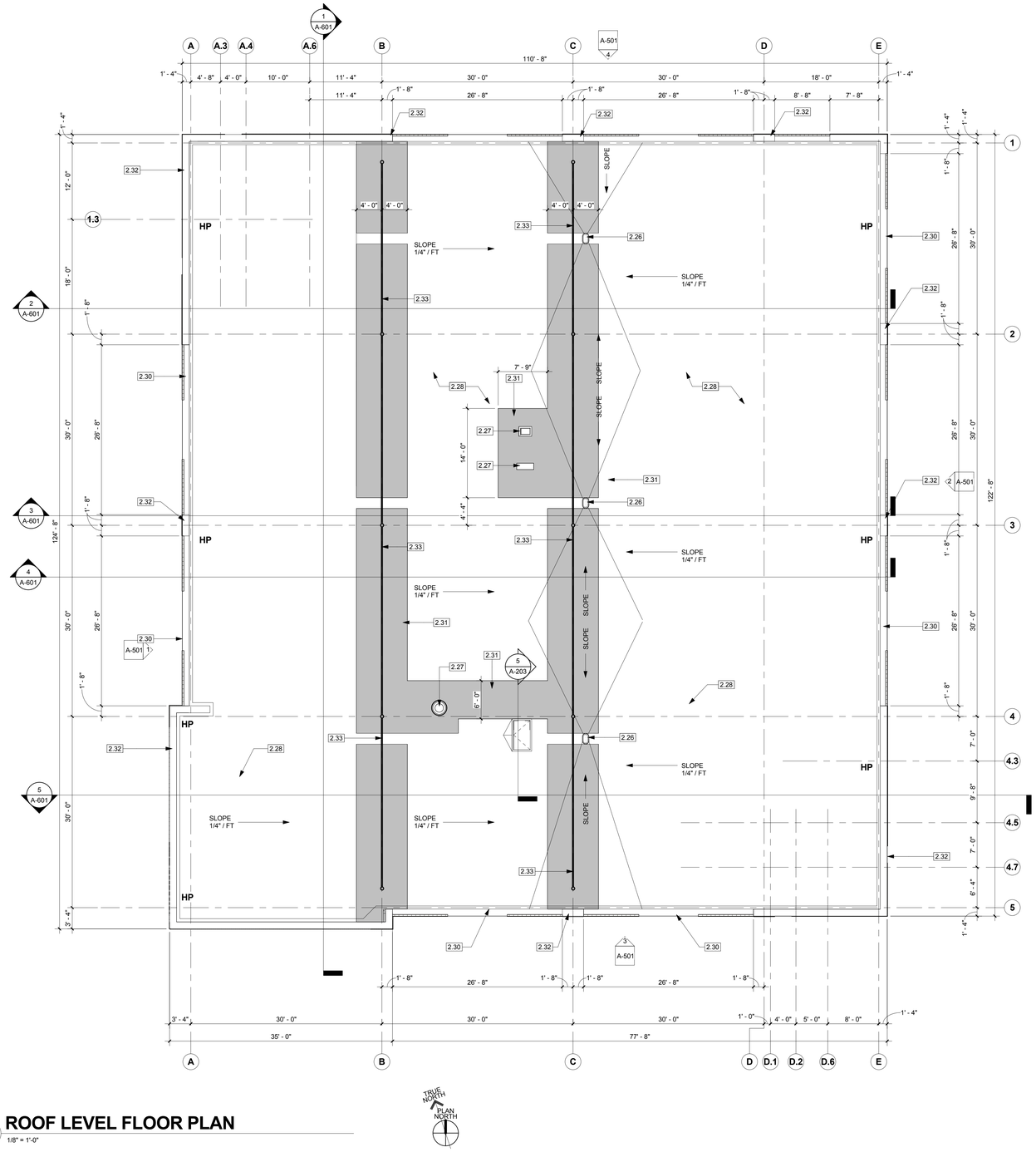

1 ROOF LEVEL FLOOR PLAN

1/8" = 1'-0"

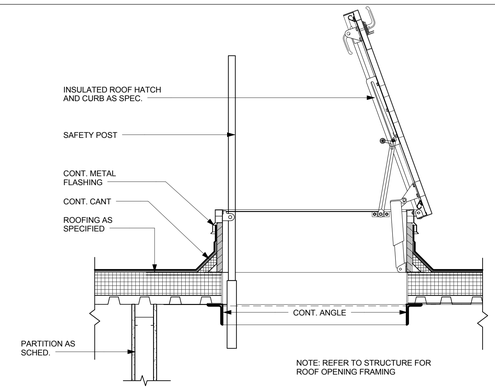

2 ROOF HATCH

1" = 1'-0"

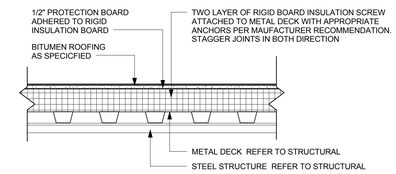

3 TYPICAL ROOF CONSTRUCTION DETAIL

1 1/2" = 1'-0"

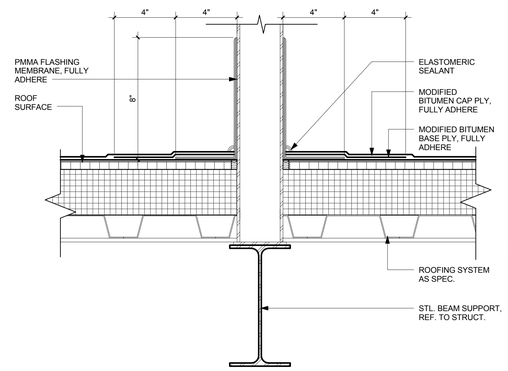

4 ROOF PENETRATION DETAIL

3" = 1'-0"

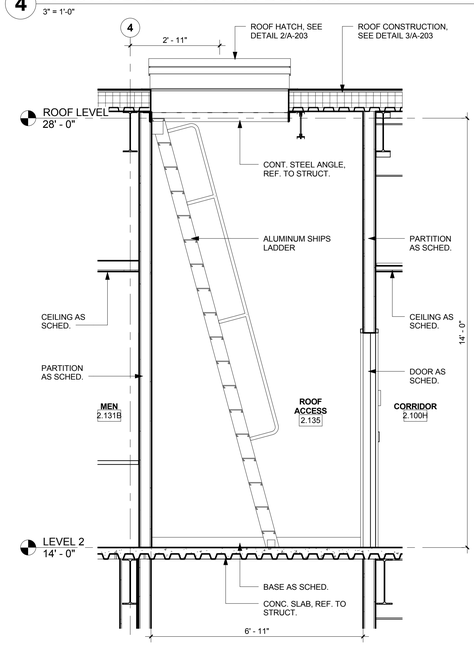

5 SHIP LADDER DETAIL

1/2" = 1'-0"

FLOOR PLAN GENERAL NOTES

1. - - - - DASHED LINE INDICATES 1 HR RATED PARTITION REFER TO CEILING PLAN FOR WALLS THAT EXTEND TO STRUCTURE.

2. TYPICAL DRYWALL PARTITION AT CLASSROOMS AND CONFERENCE ROOMS IS TYPE P10, 1 LAYER 5/8" GYP. BOARD ON ROOM SIDE AND 2 LAYERS GYP. BOARD ON CORRIDOR SIDE W/ 3 5/8" MTL. STUD 16" O.C. PROVIDE SOUND BATT INSULATION UNLESS NOTED OTHERWISE. REFER TO PARTITION SCHEDULE ON SHEET A-401.

3. TYPICAL ROOM DRYWALL PARTITION TO BE PARTITION TYPE P8 U.N.O. PROVIDE SOUND BATT INSUL. AT OFFICES, CONFERENCE ROOMS, CLASSROOMS AND STUDY SPACES. REFER TO PARTITION SCHEDULE ON SHEET A-401.

4. PROVIDE COLUMN FURRING PARTITION TYPE P3 AT ALL COLUMNS UNLESS U.N.O. REFER TO PARTITION SCHEDULE ON SHEET A-401.

5. REFER TO SHEET A-401 FOR ROOM FINISH SCHEDULE.

6. REFER TO SHEET A-402 FOR DOOR SCHEDULE.

7. REFER TO SHEET A-403 FOR WINDOW SCHEDULE, WINDOW NOTES AND WINDOW TYPE.

8. TYPICAL CHASE WALL TO BE DRYWALL PARTITION TYPE SW2, 1 HR RATED, FLOOR TO STRUCTURE. REFER TO PARTITION SCHEDULE ON SHEET A-401.

9. ALL CMU IS 8" THICK U.N.O.

10. REFER TO SHEET A-101 FOR SITE INFORMATION.

11. REFER TO ELEVATIONS FOR BRICK CONTROL JOINTS.

12. REFER TO A-401 FOR MOUNTING HEIGHT SCHEDULE.

13. PROVIDE WINDOW SHADES TYPICAL AT ALL WINDOWS EXCEPT CORRIDOR LOCATIONS. REFER TO A-403 FOR ROLLER SHADE SCHEDULE.

14. INTERIOR STAIR WALLS TO BE P8, 1 HR RATED, UNLESS NOTED OTHERWISE.

15. ELECTRICAL BOXES ARE TO BE STAGGERED 16" MIN. NOT BACK TO BACK.

16. PROVIDE CORNER GUARDS AT ALL OUTSIDE CORNERS ALONG GENERAL CIRCULATION PATHS OF CORRIDORS AND LOBBIES. REFER TO DETAIL 5/A-801.

FLOOR BOX AS SPECIFIED. FINAL LOCATION TO BE VERIFIED WITH ARCHITECT PRIOR TO INSTALLATION

CONCRETE TOPPING SLAB

KEYNOTE LEGEND

2.26	EPOXY COATED DUAL OUTLET ROOF DRAIN AND OVERFLOW
2.27	ROOFTOP MECHANICAL EQUIPMENT, REF. TO MECHANICAL
2.28	MODIFIED BITUMEN ROOF SYSTEM SEE DETAIL
2.30	ROWLOCK BRICK COURSE PARAPET CAP
2.31	SHADED AREA INDICATED EXTENT OF ROOF WALK PAD
2.32	PRE-FINISHED METAL COPING
2.33	FALL ARREST SYSTEM

muñoz & company
1017 NORTH MAIN SUITE 300
SAN ANTONIO, TEXAS 78212
O. 210.349.1163 F. 210.525.1038
W W W . M U N O Z - C O . C O M

REGISTERED ARCHITECT GREGORY EDWARDS 18803 STATE OF TEXAS

11.08.18

UTRGV The University of Texas Rio Grande Valley

UNIVERSITY OF TEXAS RIO GRANDE VALLEY
SCHOOL OF MEDICINE
TEAM BASED LEARNING CENTER
PROJECT NO: 903-1159
EDINBURG, TX
100% CONSTRUCTION DOCUMENTS

Issue/Revision

#	DESCRIPTION	DATE

Sheet Title
ROOF LEVEL FLOOR PLAN

Date
NOVEMBER 08, 2018

Project Number	Drawn By	Checked By
A17021.00	RL	CC

Sheet Number
A-203

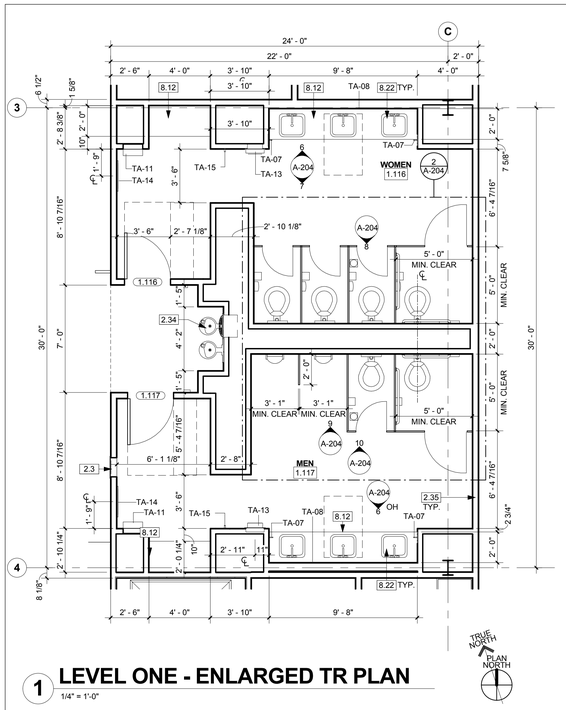

1 LEVEL ONE - ENLARGED TR PLAN
1/4" = 1'-0"

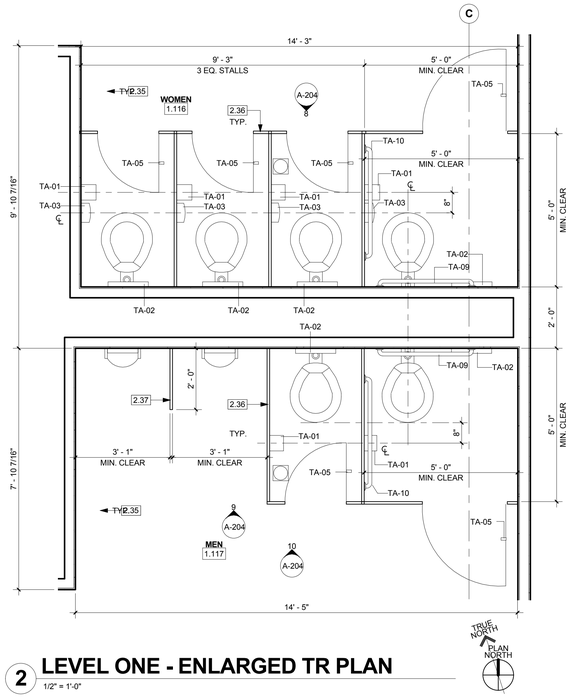

2 LEVEL ONE - ENLARGED TR PLAN
1/2" = 1'-0"

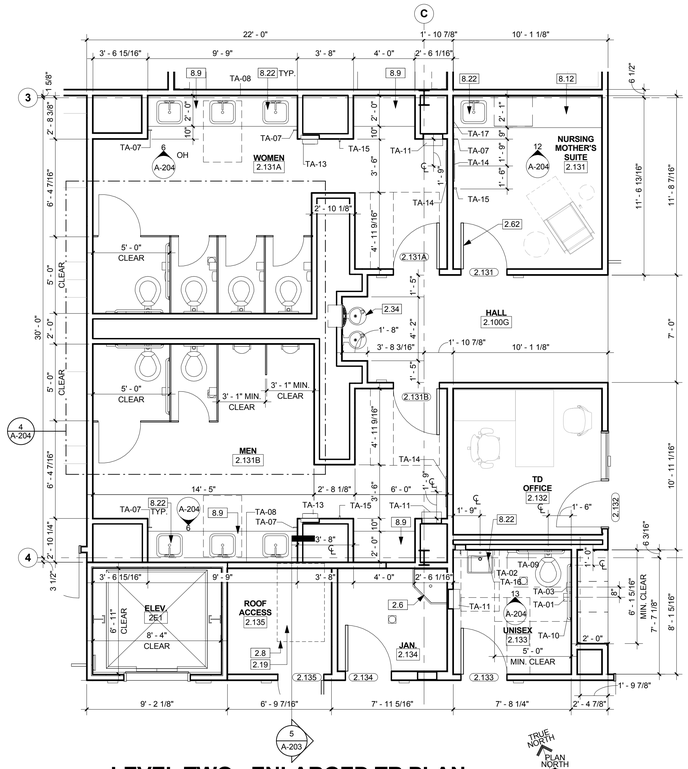

3 LEVEL TWO - ENLARGED TR PLAN
1/4" = 1'-0"

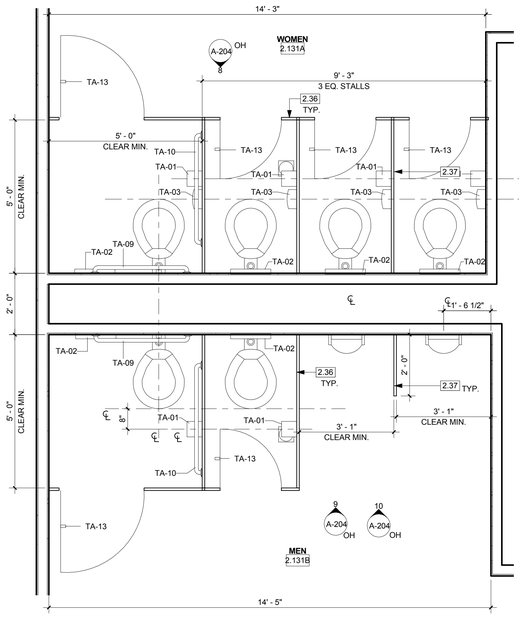

4 LEVEL TWO - ENLARGED TR PLAN
1/2" = 1'-0"

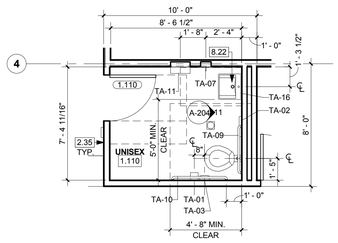

5 LEVEL ONE - ENLARGED TR PLAN
1/4" = 1'-0"

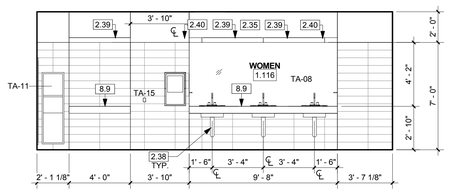

6 INTERIOR ELEVATION
1/4" = 1'-0"

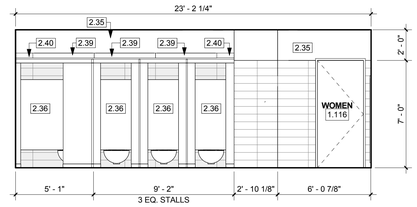

7 INTERIOR ELEVATION
1/4" = 1'-0"

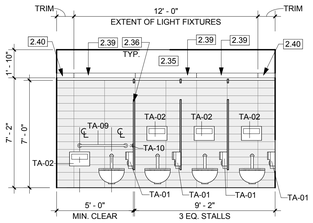

8 INTERIOR ELEVATION
1/4" = 1'-0"

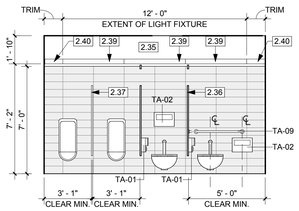

9 INTERIOR ELEVATION
1/4" = 1'-0"

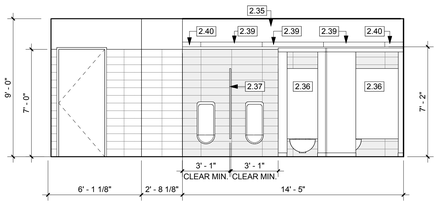

10 INTERIOR ELEVATION
1/4" = 1'-0"

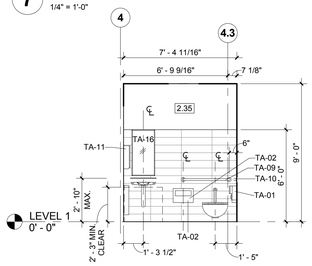

11 INTERIOR ELEVATION
1/4" = 1'-0"

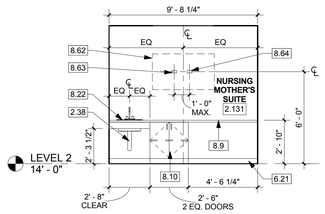

12 INTERIOR ELEVATION
1/4" = 1'-0"

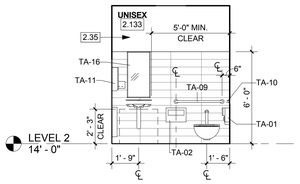

13 INTERIOR ELEVATION
1/4" = 1'-0"

KEYNOTE LEGEND

2.3	FULLY-RECESSED FIRE EXTINGUISHER CABINET, SEE DETAIL 4/A-804
2.6	FLOOR MOP SINK, REF. TO PLUMBING
2.8	LINE OF ROOF HATCH ABOVE
2.19	ALUMINUM SHIP LADDER, SEE SPEC
2.34	DUAL HEIGHT WATER COOLER WITH BOTTLER FILLER
2.35	PARTITION AS SCHED.
2.36	OVERHEAD BRACED TOILET PARTITION
2.37	WALL MOUNTED URINAL SCREEN
2.38	CONTINUOUS PIPE INSULATION, INSTALL OVER ALL PIPES. NO SHARP OR ABRASIVE SURFACES ON INSULATION PERMITTED
2.39	WALL MOUNTED LIGHT FIXTURE, REFER TO ELECTRICAL
2.40	METAL TRIM, FINISH TO MATCH ADJACENT LIGHT FIXTURE. TRIM TO BE CONTINUOUS BETWEEN EDGE OF LIGHT FIXTURE AND PARTITION
2.62	CUSTOM "NURSING MOTHER SUITE" DECAL APPLIED TO DOOR
6.21	FLOOR AND BASE AS SCHED.
8.9	QUARTZ COUNTERTOP
8.10	24" DEEP P.LAM BASE CABINET W/ ADJUSTABLE SHELVES. ALL DOORS AND DRAWERS TO BE LOCKABLE
8.12	SOLID SURFACE COUNTERTOP
8.22	SINK REF. TO PLUMBING
8.62	WALL MOUNTED MONITOR, OFOI
8.63	ELECTRICAL JUNCTION BOX, REFER TO ELECTRICAL
8.64	DATA AND/OR AV JUNCTION BOX, REFER TO DATA/AV

TOILET ACCESSORY SCHEDULE

TAG	MODEL NO.	MFGR.	DESCRIPTION	MOUNTING HEIGHT	REMARKS
TA-01	B-2890	BOBRICK	TOILET PAPER DISPENSER	28" TO TOP AFF	SURFACE MOUNTED, SINGLE STALL
TA-02	B-221	BOBRICK	SURFACE MOUNTED SEAT COVER DISPENSER	48" TO TOP AFF, 26" TO TOP AFF IN H/C STALL	STAINLESS STEEL OR APPROVED EQUAL
TA-03	B-254	BOBRICK	SURFACE MOUNTED SANITARY NAPKIN DISPOSAL	30" TO TOP AFF, 26" TO TOP AFF IN H/C STALL	STAINLESS STEEL OR APPROVED EQUAL
TA-04	B-224X36	BOBRICK	UTILITY SHELF W/ MOP/BROOM HOLDERS AND RAG HOOKS	44" TO TOP AFF	STAINLESS STEEL OR APPROVED EQUAL
TA-05	B-212	BOBRICK	COAT HOOK	39" TO CL OF HOOK AFF	STAINLESS STEEL OR APPROVED EQUAL
TA-06	NOT USED				
TA-07	B-306	BOBRICK	RECESSED SOAP DISPENSER	46" TO TOP AFF	RECESSED
TA-08	----	----	MIRROR	3'-2" TO BOTTOM	56" HEIGHT AND FULL WIDTH
TA-09	B-5806X36	BOBRICK	GRAB BAR 36"	34" TO TOP OF BAR AFF	
TA-10	B-5806X42	BOBRICK	GRAB BAR 42"	34" TO TOP OF BAR AFF	
TA-11	B-3961	BOBRICK	SEMI-RECESSED TOWEL DISPENSER AND WASTE RECEPTICAL	59 1/2" TO TOP AFF	STAINLESS STEEL OR APPROVED EQUAL
TA-12	B-295X24	BOBRICK	SURFACE MOUNTED SHELF	VARIES, SEE REMARKS	3 PER JANITORS CLOSETS, TOP OF SHELF AT 24", 42" AND 60" AFF
TA-13	XL-SB	XLERATOR	SURFACE MOUNTED HAND DRYER	37" TO BOTTOM	120V W/ RECESS MOUNTING KIT, 40502 ADA COMPLIANT KIT
TA-14	B-165 2460	BOBRICK	MIRROR	72" TO TOP AFF	24" WIDTH X 60" HEIGHT
TA-15	2008	PETER PEPPER	HAT & COAT HOOK	39" TO CL OF HOOK AFF	POLISHED CHROME
TA-16	B-165 1836	BOBRICK	MIRROR	72" TO TOP AFF	18" WIDTH X 36" HEIGHT, REFLECTIVE SURFACE 40" AFF, MAX.
TA-17	2479	BRADLEY	FULLY RECESSED CENTER PULL 9" ROLL TOWEL DISPENSER	65" TO TOP AFF	DISPENSER DISCHARGE TO BE 3'-11 1/4" AFF

muñoz & company
1017 NORTH MAIN SUITE 300
SAN ANTONIO, TEXAS 78212
O. 210.349.1163 F. 210.525.1038
W W W . M U N O Z - C O . C O M

REGISTERED ARCHITECT GREGORY EDWARD GUTIERREZ 18803 STATE OF TEXAS
11.08.18

UTRGV
The University of Texas Rio Grande Valley

UNIVERSITY OF TEXAS RIO GRANDE VALLEY
SCHOOL OF MEDICINE
TEAM BASED LEARNING CENTER
PROJECT NO: 903-1159
EDINBURG, TX
100% CONSTRUCTION DOCUMENTS

Issue/Revision

#	DESCRIPTION	DATE

Sheet Title
ENLARGED RESTROOM PLANS AND INTERIOR ELEVATIONS

Date
NOVEMBER 08, 2018

Project Number	Drawn By	Checked By
A17021.00	RL	CC

Sheet Number
A-204

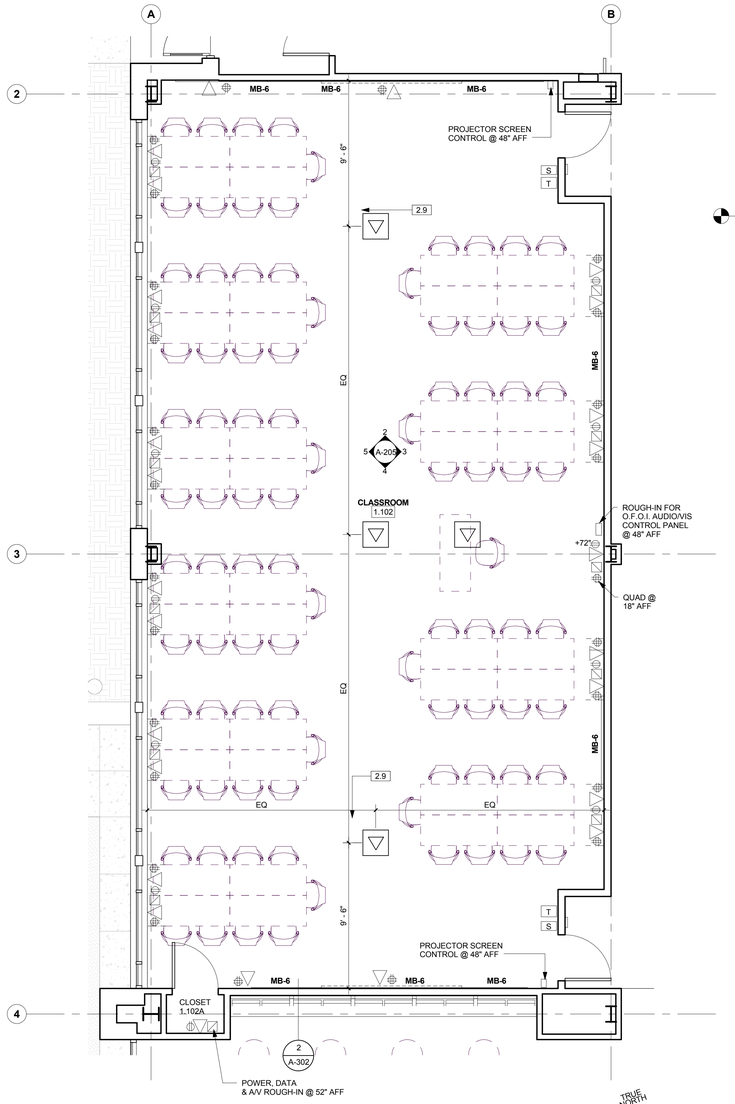

1 ENLARGED PLAN - CLASSROOM 1.102
1/4" = 1'-0"

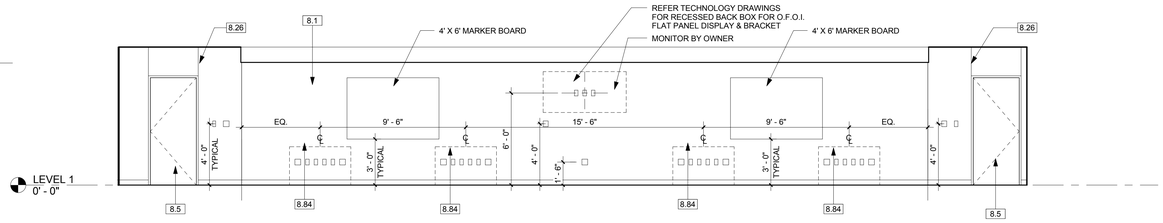

3 CLASSROOM 1.102 - EAST
1/4" = 1'-0"

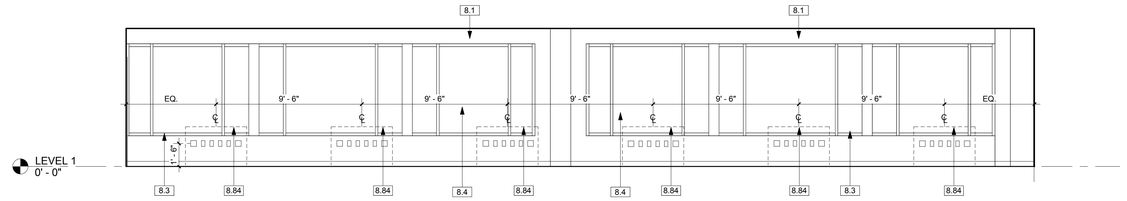

5 CLASSROOM 1.102 - WEST
1/4" = 1'-0"

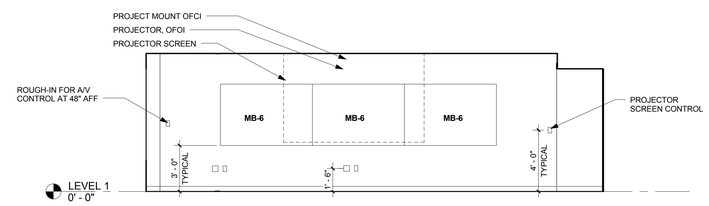

2 CLASSROOM 1.102 - NORTH
1/4" = 1'-0"

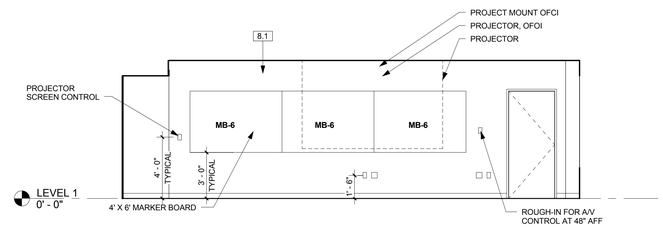

4 CLASSROOM 1.102 - SOUTH
1/4" = 1'-0"

NOTE:
FINAL LOCATION OF FLOORBOXES AND WALL OUTLETS TO BE COORDINATED WITH ARCHITECT AND FURNITURE PLANNER.

GENERAL CONTRACTOR IS RESPONSIBLE FOR THE COORDINATION OF MECHANICAL, ELECTRICAL, A/V, SECURITY AND FIRE PROTECTION DEVICES.

GENERAL CONTRACTOR TO INSTALL ALL DEVICES IN ONE TYPICAL OFFICE AS A MOCK-UP FOR OWNER REVIEW AND APPROVAL.

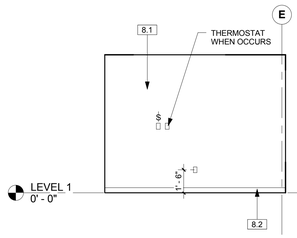

7 OFFICE - NORTH
1/4" = 1'-0"

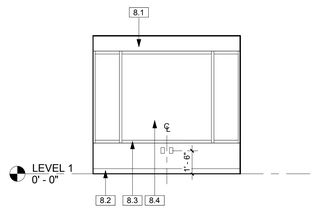

8 OFFICE - EAST
1/4" = 1'-0"

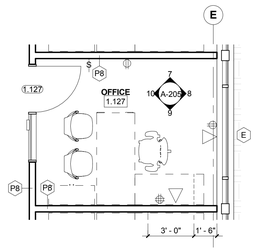

6 ENLARGED PLAN - OFFICE AT EXTERIOR WALL
1/4" = 1'-0"

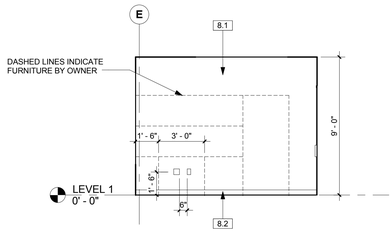

9 OFFICE - SOUTH
1/4" = 1'-0"

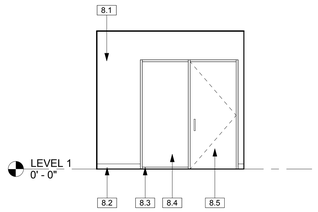

10 OFFICE - WEST
1/4" = 1'-0"

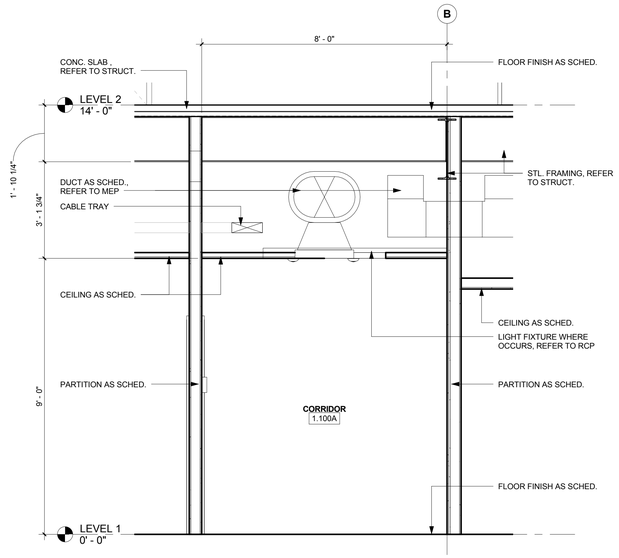

11 CORRIDOR SECTION
1/2" = 1'-0"

KEYNOTE LEGEND

2.9	CEILING MOUNTED PROJECTOR MOUNT, OWNER FURNISHED CONTRACTOR INSTALLED. FINAL LOCATION OF MOUNT TO BE COORDINATED WITH OWNER
8.1	PAINTED GYP. BD.
8.2	BASE AS SCHED.
8.3	INTERIOR ALUMINUM FRAMING SYSTEM
8.4	GLAZING AS SCHED.
8.5	DOOR AS SCHED.
8.26	VERTICAL DRYWALL CONTROL JOINT, TYPICAL AT ALL DOOR AND INTERIOR ALUMINUM FRAME EDGES, SEE DETAIL 6/A-801
8.84	DASHED LINE INDICATES FURNITURE BY OWNER. POWER, DATA AND A/V ROUGH-INS TO OCCUR WITHIN AREA OF WALL CONCEALED BY FURNITURE

RECEPTACLE LEGEND

MARK	DESCRIPTION
	QUAD POWER RECEPTACLE OUTLET
	DUPLEX POWER RECEPTACLE OUTLET
	DATA RECEPTACLE OUTLET
	AV RECEPTACLE OUTLET

muñoz & company
1017 NORTH MAIN SUITE 300
SAN ANTONIO, TEXAS 78212
O. 210.349.1163 F. 210.525.1038
W W W . M U N O Z - C O . C O M

REGISTERED ARCHITECT JOSEPH EDWARDS 18803 STATE OF TEXAS
11.08.18

UTRGV
The University of Texas Rio Grande Valley

UNIVERSITY OF TEXAS RIO GRANDE VALLEY
SCHOOL OF MEDICINE
TEAM BASED LEARNING CENTER
PROJECT NO: 903-1159
EDINBURG, TX
100% CONSTRUCTION DOCUMENTS

Issue/Revision

#	DESCRIPTION	DATE

Sheet Title
ENLARGED PLANS AND INTERIOR ELEVATIONS - ELECTRICAL AND DATA COORDINATION

Date
NOVEMBER 08, 2018

Project Number	Drawn By	Checked By
A17021.00	JF	CC

Sheet Number
A-205

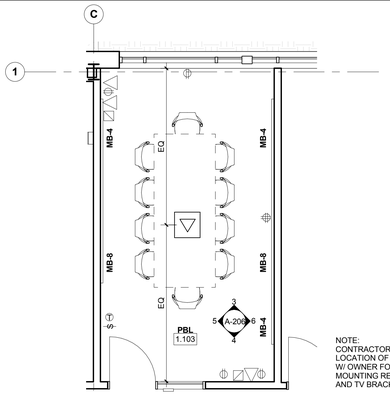

NOTE:
CONTRACTOR TO COORIDINATE LOCATION OF ELECT. & DATA W/ OWNER FOR SPECIFIC MOUNTING REQUIREMENTS AND TV BRACKET

TRUE NORTH
PLAN NORTH

1 ENLARGED PLAN - PBL 1.103
1/4" = 1'-0"

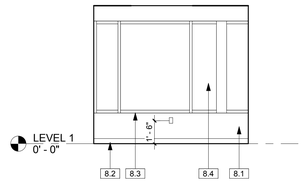

3 PBL 1.103 - NORTH
1/4" = 1'-0"

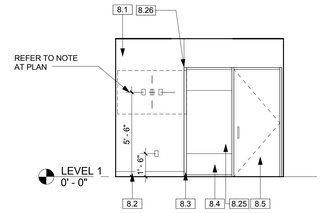

4 PBL 1.103 - SOUTH
1/4" = 1'-0"

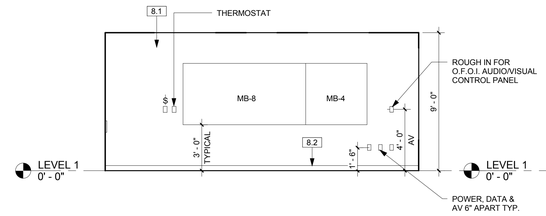

5 PBL 1.103 - WEST
1/4" = 1'-0"

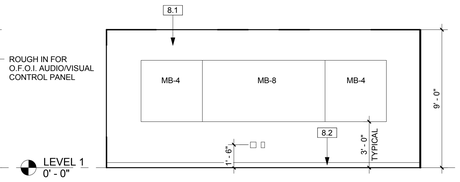

6 PBL 1.103 - EAST
1/4" = 1'-0"

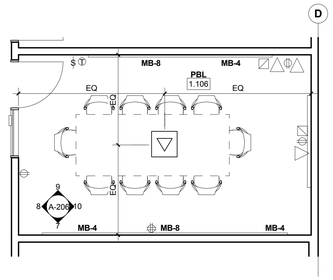

TRUE NORTH
PLAN NORTH

2 ENLARGED PLAN - TYPICAL PBL
1/4" = 1'-0"

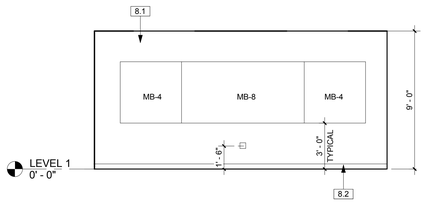

7 TYP. PBL - SOUTH
1/4" = 1'-0"

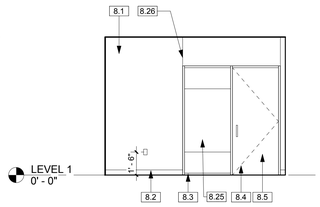

8 TYP. PBL - WEST
1/4" = 1'-0"

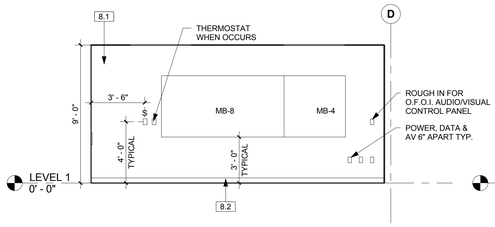

9 TYP. PBL - NORTH
1/4" = 1'-0"

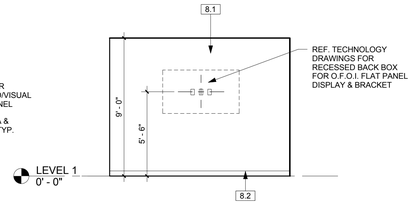

10 TYP. PBL - EAST
1/4" = 1'-0"

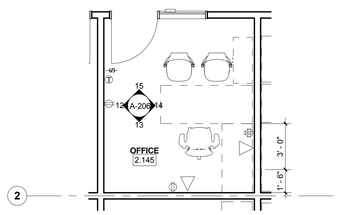

TRUE NORTH
PLAN NORTH

11 ENLARGED PLAN -TYPICAL OFFICE
1/4" = 1'-0"

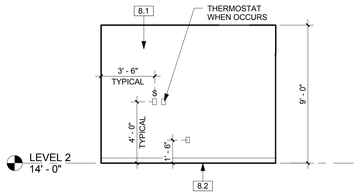

12 TYP. OFFICE - WEST
1/4" = 1'-0"

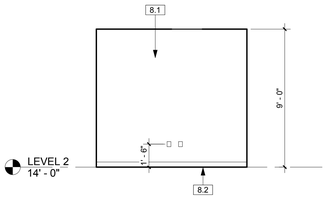

13 TYP. OFFICE - SOUTH
1/4" = 1'-0"

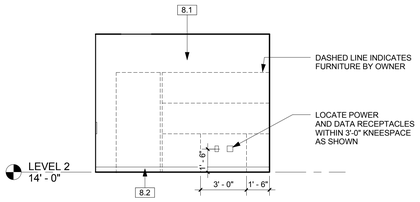

14 TYP. OFFICE - EAST
1/4" = 1'-0"

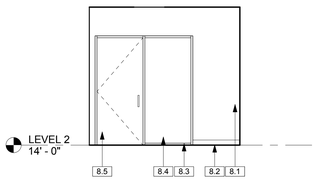

15 TYP. OFFICE - NORTH
1/4" = 1'-0"

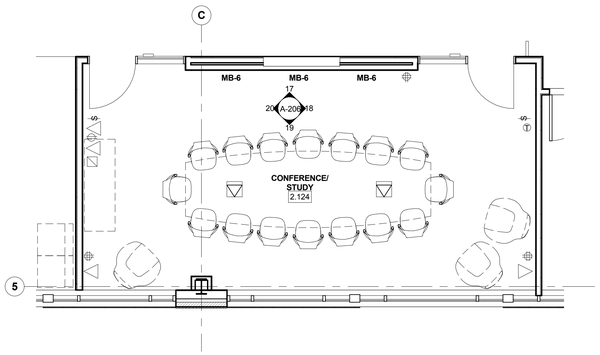

TRUE NORTH
PLAN NORTH

16 ENLARGED PLAN - CONFERENCE/STUDY
1/4" = 1'-0"

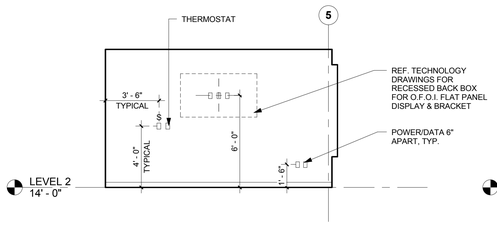

18 CONFERENCE/STUDY - EAST
1/4" = 1'-0"

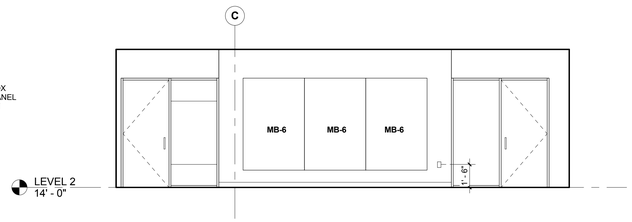

17 CONFERENCE/STUDY - NORTH
1/4" = 1'-0"

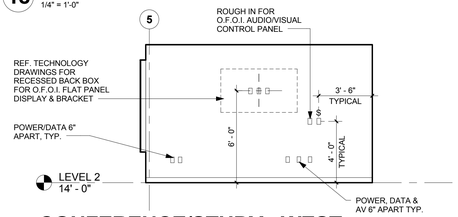

20 CONFERENCE/STUDY - WEST
1/4" = 1'-0"

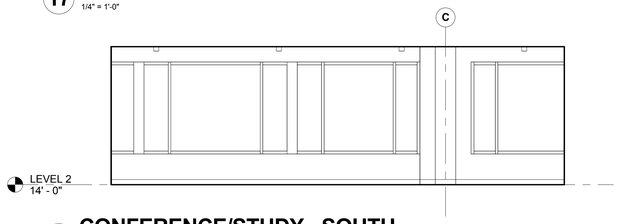

19 CONFERENCE/STUDY - SOUTH
1/4" = 1'-0"

NOTE:
FINAL LOCATION OF FLOORBOXES AND WALL OUTLETS TO BE COORDINATED WITH ARCHITECT AND FURNITURE PLANNER.

GENERAL CONTRACTOR IS RESPONSIBLE FOR THE COORDINATION OF MECHANICAL, ELECTRICAL, A/V, SECURITY AND FIRE PROTECTION DEVICES.

GENERAL CONTRACTOR TO INSTALL ALL DEVICES IN ONE TYPICAL OFFICE AS A MOCK-UP FOR OWNER REVIEW AND APPROVAL.

muñoz & company
1017 NORTH MAIN SUITE 300
SAN ANTONIO, TEXAS 78212
O. 210.349.1163 F. 210.525.1038
W W W . M U N O Z - C O . C O M

REGISTERED ARCHITECT
JEFF EDWARDS
18803
STATE OF TEXAS
11.08.18

UTRGV
The University of Texas Rio Grande Valley

UNIVERSITY OF TEXAS RIO GRANDE VALLEY
SCHOOL OF MEDICINE
TEAM BASED LEARNING CENTER
PROJECT NO: 903-1159
EDINBURG, TX
100% CONSTRUCTION DOCUMENTS

Issue/Revision

#	DESCRIPTION	DATE

Sheet Title
ENLARGED PLANS AND INTERIOR ELEVATIONS - ELECTRICAL AND DATA COORDINATION

Date
NOVEMBER 08, 2018

Project Number	Drawn By	Checked By
A17021.00	JF	CC

Sheet Number
A-206

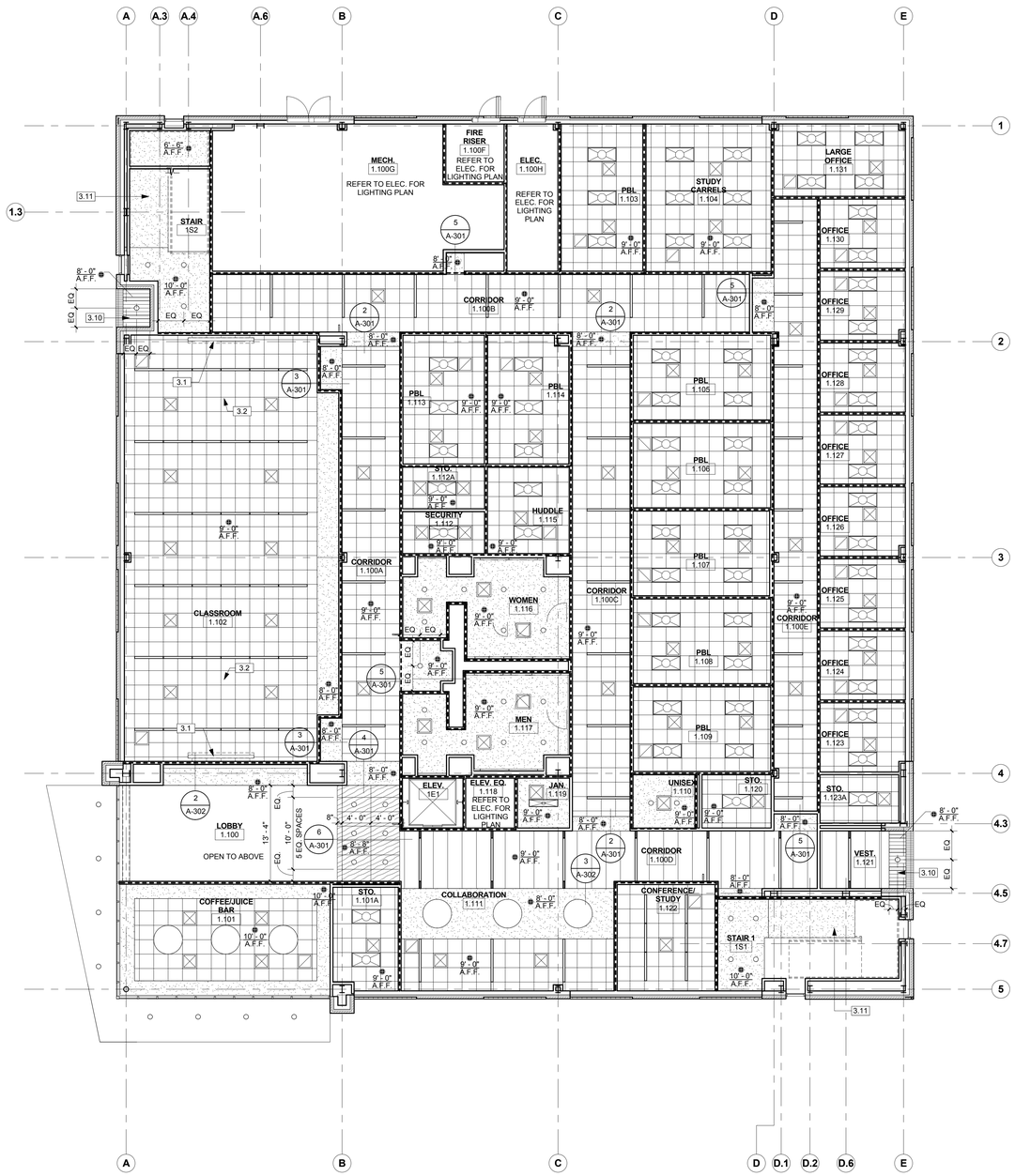

1 LEVEL ONE REFLECTED CEILING PLAN
1/8" = 1'-0"

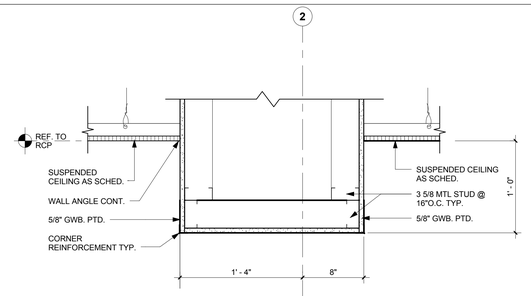

2 CEILING DETAIL
1 1/2" = 1'-0"

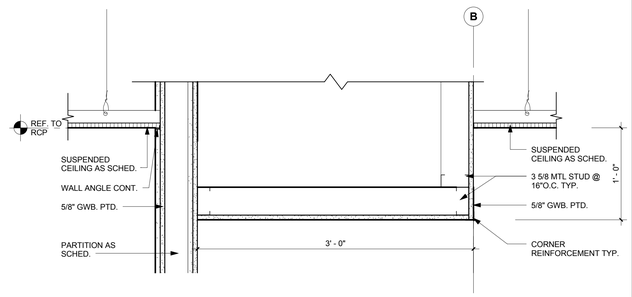

3 CEILING DETAIL
1 1/2" = 1'-0"

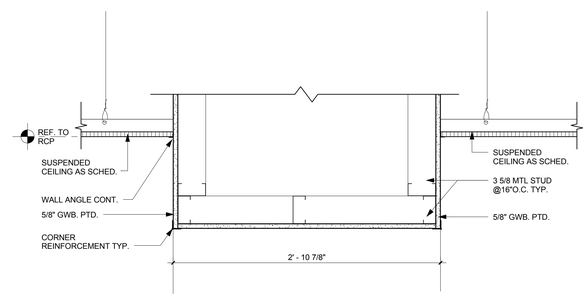

4 CEILING DETAIL
1 1/2" = 1'-0"

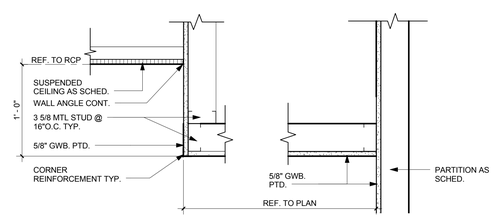

5 CEILING DETAIL
1 1/2" = 1'-0"

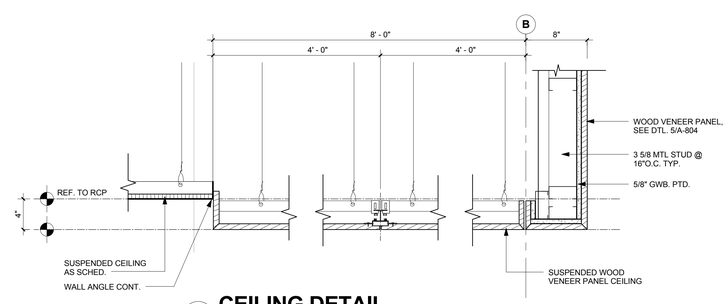

6 CEILING DETAIL
1 1/2" = 1'-0"

RCP GENERAL NOTES

1. SEE FINISH SCHEDULE FOR CEILING TYPES U.N.O.
2. REFER TO LIFE SAFETY PLANS FOR RATED WALLS.
3. CEILING GRIDS CENTERED IN ROOM U.N.O.
4. ALL FIXTURES/ DEVICES MAY NOT BE INDICATED COORDINATE WITH MEP, A/V, & TELECOM DRAWINGS, AND PROVIDE ADDITIONAL FIXTURES, DEVICES AS REQUIRED.
5. REFER TO MECHANICAL FOR AIR DEVICES TYPICAL.
6. REFER TO ELECTRICAL FOR CEILING SPEAKER PLACEMENT.
7. REFER TO ELECTRICAL FOR LIGHTING AND POWER.
8. LIGHTING LAYOUT AT MECHANICAL ROOMS TO BE COORDINATED WITH M.E.P.
9. ALL CEILINGS TO BE 9'-0" A.F.F. U.N.O. - COORDINATE ANY DISCREPANCIES WITH CEILING HEIGHT AND MEP WORK WITH ARCHITECT BEFORE INSTALLATION OF ANY OVERHEAD ITEMS.
10. PROVIDE AND COORDINATE ACCESS DOORS WITH MEP.

RCP LEGEND

- OPEN TO STRUCTURE (NOT PAINTED)
- GYPSUM BOARD CEILING
- 24" X 24" LAY-IN CEILING
- 24" X 96" LAY-IN CEILING
- ALUMINUM SOFFIT PANEL
- WOOD VENEER WALL COVERING
- PENDANT LIGHT FIXTURE
- RECESSED DOWN LIGHT FIXTURE
- D RECESSED DOWN LIGHT FIXTURE - DIMMING
- RECESSED FLUORESCENT FIXTURE 24" X 24"
- RECESSED FLUORESCENT FIXTURE 24" X 48"
- RECESSED ROUND ARHCITECTURAL FIXTURE 48"X48"
- SURFACE/WALL MOUNTED LED STRIP COVE FIXTURE (LOBBY)
- R WALL MOUNTED LINEAR FIXTURE 4"X48" (RESTROOM)
- LED WALL MOUNTED LED LINEAR FIXTURE 4"X48" (EXTERIOR)
- S WALL MOUNTED ROUND ASYMMETRIC 6 3/4"X48" (STAIRS)
- WALL MOUNTED SCONE FIXTURE (LOBBY)
- LED WALL MOUNTED LED CYLINDER FIXTURE (EXTERIOR)
- RECESSED ROUND ARHCITECTURAL FIXTURE 24"X24"
- PENDANT FLUORESCENT UTILITY FIXTURE
- PENDANT LINEAR FIXTURE
- PENDANT LIGHT FIXTURE 1
- PENDANT LIGHT FIXTURE 2
- PENDANT LIGHT FIXTURE 3
- PENDANT LIGHT FIXTURE 4
- LED PENDANT LINEAR INDIRECT ONLY FIXTURE
- LINEAR SUPPLY DIFFUSER
- SUPPLY DIFFUSER 24" X 24"
- RETURN/EXHAUST DIFFUSER 24" X 24"
- CEILING ACCESS PANEL
- PARTITIONS TO STRUCTURE
- ISOLATED CEILING ON VIBRATION ISOLATION HANGER
- RECESSED DROP DOWN PROJECTION SCREEN
- CEILING MOUNTED PROJECTOR MOUNT, OFCI. FINAL LOCATION OF MOUNT TO BE COORDINATED WITH OWNER.

KEYNOTE LEGEND

3.1	RECESSED DROP-DOWN PROJECTION SCREEN, REF. A/V & ELEC
3.2	CEILING MOUNTED PROJECTOR MOUNT, OWNER FURNISHED CONTRACTOR INSTALLED. FINAL LOCATION OF MOUNT TO BE COORDINATED WITH OWNER
3.10	PREFINISHED ALUMINUM SOFFIT PANEL, HATCHED AREA INDICATES PERFORATED PORTION OF PANEL
3.11	PTD. GYP. BD. CEILING UNDER STAIR, SEE STAIR DETAILS

muñoz & company
1017 NORTH MAIN SUITE 300
SAN ANTONIO, TEXAS 78212
O. 210.349.1163 F. 210.525.1038
W W W . M U N O Z - C O . C O M

REGISTERED ARCHITECT GREGORY EDWARDS 18803 STATE OF TEXAS
11.08.18

UTRGV The University of Texas Rio Grande Valley

UNIVERSITY OF TEXAS RIO GRANDE VALLEY
SCHOOL OF MEDICINE TEAM BASED LEARNING CENTER
PROJECT NO: 903-1159
EDINBURG, TX
100% CONSTRUCTION DOCUMENTS

Issue/Revision

#	DESCRIPTION	DATE

Sheet Title
LEVEL ONE REFELECTED CEILING PLAN

Date
NOVEMBER 08, 2018

Project Number	Drawn By	Checked By
A17021.00	RL	CC

Sheet Number
A-301

1 LEVEL TWO REFLECTED CEILING PLAN

1/8" = 1'-0"

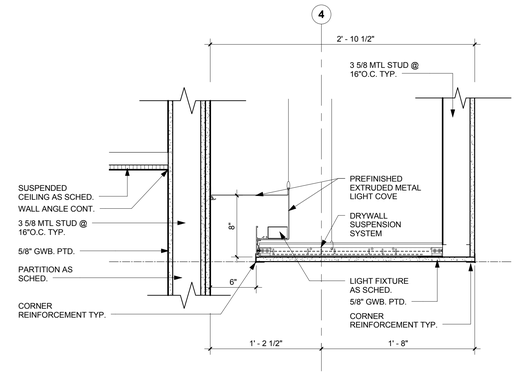

2 CEILING DETAIL

1 1/2" = 1'-0"

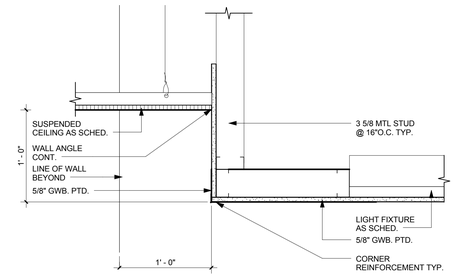

3 CEILING DETAIL

1 1/2" = 1'-0"

RCP GENERAL NOTES

1. SEE FINISH SCHEDULE FOR CEILING TYPES U.N.O.
2. REFER TO LIFE SAFETY PLANS FOR RATED WALLS.
3. CEILING GRIDS CENTERED IN ROOM U.N.O.
4. ALL FIXTURES/ DEVICES MAY NOT BE INDICATED COORDINATE WITH MEP, A/V, & TELECOM DRAWINGS, AND PROVIDE ADDITIONAL FIXTURES, DEVICES AS REQUIRED.
5. REFER TO MECHANICAL FOR AIR DEVICES TYPICAL.
6. REFER TO ELECTRICAL FOR CEILING SPEAKER PLACEMENT.
7. REFER TO ELECTRICAL FOR LIGHTING AND POWER.
8. LIGHTING LAYOUT AT MECHANICAL ROOMS TO BE COORDINATED WITH M.E.P.
9. ALL CEILINGS TO BE 9'-0" A.F.F. U.N.O. - COORDINATE ANY DISCREPANCIES WITH CEILING HEIGHT AND MEP WORK WITH ARCHITECT BEFORE INSTALLATION OF ANY OVERHEAD ITEMS.
10. PROVIDE AND COORDINATE ACCESS DOORS WITH MEP.

RCP LEGEND

- OPEN TO STRUCTURE (NOT PAINTED)
- GYPSUM BOARD CEILING
- 24" X 24" LAY-IN CEILING
- 24" X 96" LAY-IN CEILING
- ALUMINUM SOFFIT PANEL
- WOOD VENEER WALL COVERING
- PENDANT LIGHT FIXTURE
- RECESSED DOWN LIGHT FIXTURE
- D — RECESSED DOWN LIGHT FIXTURE - DIMMING
- RECESSED FLUORESCENT FIXTURE 24" X 24"
- RECESSED FLUORESCENT FIXTURE 24" X 48"
- RECESSED ROUND ARHCITECTURAL FIXTURE 48"X48"
- SURFACE/WALL MOUNTED LED STRIP COVE FIXTURE (LOBBY)
- R — WALL MOUNTED LINEAR FIXTURE 4"X48" (RESTROOM)
- LED — WALL MOUNTED LED LINEAR FIXTURE 4"X48" (EXTERIOR)
- S — WALL MOUNTED ROUND ASYMMETRIC 6 3/4"X48" (STAIRS)
- WALL MOUNTED SCONE FIXTURE (LOBBY)
- LED — WALL MOUNTED LED CYLINDER FIXTURE (EXTERIOR)
- RECESSED ROUND ARHCITECTURAL FIXTURE 24"X24"
- PENDANT FLUORESCENT UTILITY FIXTURE
- PENDANT LINEAR FIXTURE
- PENDANT LIGHT FIXTURE 1
- PENDANT LIGHT FIXTURE 2
- PENDANT LIGHT FIXTURE 3
- PENDANT LIGHT FIXTURE 4
- LED — PENDANT LINEAR INDIRECT ONLY FIXTURE
- LINEAR SUPPLY DIFFUSER
- SUPPLY DIFFUSER 24" X 24"
- RETURN/EXHAUST DIFFUSER 24" X 24"
- CEILING ACCESS PANEL
- PARTITIONS TO STRUCTURE
- ISOLATED CEILING ON VIBRATION ISOLATION HANGER
- RECESSED DROP DOWN PROJECTION SCREEN
- CEILING MOUNTED PROJECTOR MOUNT, OFCI, FINAL LOCATION OF MOUNT TO BE COORDINATED WITH OWNER.

KEYNOTE LEGEND

muñoz & company
1017 NORTH MAIN SUITE 300
SAN ANTONIO, TEXAS 78212
O. 210.349.1163 F. 210.525.1038
W W W . M U N O Z - C O . C O M

REGISTERED ARCHITECT — GREGORY EDWARDS — 18803 — STATE OF TEXAS

11.08.18

UTRGV The University of Texas Rio Grande Valley

UNIVERSITY OF TEXAS RIO GRANDE VALLEY
SCHOOL OF MEDICINE TEAM BASED LEARNING CENTER
PROJECT NO: 903-1159
EDINBURG, TX
100% CONSTRUCTION DOCUMENTS

Issue/Revision

#	DESCRIPTION	DATE

Sheet Title
LEVEL TWO REFLECTED CEILING PLAN

Date
NOVEMBER 08, 2018

Project Number	Drawn By	Checked By
A17021.00	RL	CC

Sheet Number
A-302

ROOM FINISH SCHEDULE - LEVEL 1

LEVEL	ROOM NO.	NAME	FLOOR	BASE	NORTH WALL	SOUTH WALL	EAST WALL	WEST WALL	CEILING	ROLLER SHADES	COMMENTS
LEVEL 1	1.100	LOBBY	CT-1	CT-3	PT-1,PT-4	PT-1	PT-1	PT-1, WD PANEL	ACP-2, WD PANEL	RS-2	RS-2 AT UPPER LEVEL WINDOWS ONLY
LEVEL 1	1.100A	CORRIDOR	LVT	VB	PT-1,PT-4	PT-1	PT-1	PT-1	ACP-1	---	TWO COLOR LVT PATTERN
LEVEL 1	1.100B	CORRIDOR	LVT	VB	PT-1, PLAM-1	PT-1	PT-1	PT-1	ACP-1	---	TWO COLOR LVT PATTERN
LEVEL 1	1.100C	CORRIDOR	LVT	VB	PT-1	PT-1	PT-1	PT-1	ACP-1	---	TWO COLOR LVT PATTERN
LEVEL 1	1.100D	CORRIDOR	CT-1	CT-3	PT-1	PT-1	PT-1	PT-1	ACP-2	---	
LEVEL 1	1.100E	CORRIDOR	CPT-1	VB	PT-1	PT-1	PT-1	PT-1	ACP-1	---	
LEVEL 1	1.100F	FIRE RISER	SC	VB	PT-1	PT-1	PT-1	PT-1	EXPOSED	---	
LEVEL 1	1.100G	MECH.	SC	VB	PT-1	PT-1	PT-1	PT-1	EXPOSED	---	
LEVEL 1	1.100H	ELEC.	SC	VB	PT-1	PT-1	PT-1	PT-1	EXPOSED	---	
LEVEL 1	1.101	COFFEE/JUICE BAR	CT-1	CT-3	PT-6	PT-6	PT-6/CT-4	PT-6	PT-6/ACP-3	---	REFERENCE 012100 ALLOWANCES
LEVEL 1	1.101A	STO.	CT-1	CT-3	PT-1/FRP	PT-6	PT-1/FRP	PT-6	ACP-3	RS-3	REFERENCE 012100 ALLOWANCES
LEVEL 1	1.102	CLASSROOM	CPT-1,CPT-2	VB	PT-1	PT-1	PT-1, PT-2	PT-1, WD PANEL	ACP-1	RS-3	
LEVEL 1	1.102A	CLO.	CPT-1	VB	PT-1	PT-1	PT-1	PT-1	EXPOSED	---	
LEVEL 1	1.103	PBL	CPT-1	VB	PT-1	PT-1	PT-1	PT-1	ACP-1	RS-1	
LEVEL 1	1.104	STUDY CARRELS	CPT-1	VB	PT-1	PT-1	PT-1	PT-1	ACP-1	RS-1	
LEVEL 1	1.105	PBL	CPT-1	VB	PT-1	PT-1	PT-1	PT-1	ACP-1	---	
LEVEL 1	1.106	PBL	CPT-1	VB	PT-1	PT-1	PT-1	PT-1	ACP-1	---	
LEVEL 1	1.107	PBL	CPT-1	VB	PT-1	PT-1	PT-1	PT-1	ACP-1	---	
LEVEL 1	1.108	PBL	CPT-1	VB	PT-1	PT-1	PT-1	PT-1	ACP-1	---	
LEVEL 1	1.109	PBL	CPT-1	VB	PT-1	PT-1	PT-1	PT-1	ACP-1	---	
LEVEL 1	1.110	UNISEX	CT-2	CT-1	CT-1/PT-5	CT-1/PT-5	CT-1/PT-5	CT-1/PT-5	PT-5	---	CERAMIC TILE UP TO 72" AFF AT ALL WALLS
LEVEL 1	1.111	COLLABORATION	CPT-2	VB	---	PT-3	PT-3	PT-3	ACP-1,PT-3	RS-2	
LEVEL 1	1.112	SECURITY	LVT	VB	PT-1	PT-1	PT-1	PT-1	ACP-1	---	
LEVEL 1	1.112A	STO.	LVT	VB	PT-1	PT-1	PT-1	PT-1	ACP-1	---	
LEVEL 1	1.113	PBL	CPT-1	VB	PT-1	PT-1	PT-1	PT-1	ACP-1	---	
LEVEL 1	1.114	PBL	CPT-1	VB	PT-1	PT-1	PT-1	PT-1	ACP-1	---	
LEVEL 1	1.115	HUDDLE	CPT-1	VB	PT-1	PT-1	PT-1	PT-1	ACP-1	---	
LEVEL 1	1.116	WOMEN	CT-2	CT-1	CT-1/PT-5	CT-1/PT-5	CT-1/PT-5	CT-1/PT-5	PT-5	---	CERAMIC TILE UP TO 84" AFF AT ALL WALLS
LEVEL 1	1.117	MEN	CT-2	CT-1	CT-1/PT-5	CT-1/PT-5	CT-1/PT-5	CT-1/PT-5	PT-5	---	CERAMIC TILE UP TO 84" AFF AT ALL WALLS
LEVEL 1	1.118	ELEV. EQ.	SC	VB	PT-1	PT-1	PT-1	PT-1	EXPOSED	---	
LEVEL 1	1.119	JAN.	SC	VB	PT-1/FRP	PT-1/FRP	PT-1/FRP	PT-1/FRP	PT-5	---	
LEVEL 1	1.120	STO.	SC	VB	PT-1	PT-1	PT-1	PT-1	ACP-1	---	
LEVEL 1	1.121	VEST.	CT-1	CT-3	PT-1	PT-1	PT-1	PT-1	ACP-2	---	
LEVEL 1	1.122	CONFERENCE/ STUDY	CPT-1	VB	PT-1	PT-1	PT-1	PT-1	ACP-1	RS-3	
LEVEL 1	1.123	OFFICE	CPT-1	VB	PT-1	PT-1	PT-1	PT-1	ACP-1	RS-1	
LEVEL 1	1.123A	STO.	CPT-1	VB	PT-1	PT-1	PT-1	PT-1	ACP-1	---	
LEVEL 1	1.124	OFFICE	CPT-1	VB	PT-1	PT-1	PT-1	PT-1	ACP-1	RS-1	
LEVEL 1	1.125	OFFICE	CPT-1	VB	PT-1	PT-1	PT-1	PT-1	ACP-1	RS-1	
LEVEL 1	1.126	OFFICE	CPT-1	VB	PT-1	PT-1	PT-1	PT-1	ACP-1	RS-1	
LEVEL 1	1.127	OFFICE	CPT-1	VB	PT-1	PT-1	PT-1	PT-1	ACP-1	RS-1	
LEVEL 1	1.128	OFFICE	CPT-1	VB	PT-1	PT-1	PT-1	PT-1	ACP-1	RS-1	
LEVEL 1	1.129	OFFICE	CPT-1	VB	PT-1	PT-1	PT-1	PT-1	ACP-1	RS-1	
LEVEL 1	1.130	OFFICE	CPT-1	VB	PT-1	PT-1	PT-1	PT-1	ACP-1	RS-1	
LEVEL 1	1.131	LARGE OFFICE	CPT-1	VB	PT-1	PT-1	PT-1	PT-1	ACP-1	RS-1	
LEVEL 1	1E1	ELEV.	LVT	MFG	MFG	MFG	MFG	MFG	MFG	---	
LEVEL 1	1S1	STAIR 1	ICC	VB/PT-8	PT-7	PT-7	PT-7	PT-7	PT-5	---	RAILINGS PT-8
LEVEL 1	1S2	STAIR	ICC	VB/PT-8	PT-7	PT-7	PT-7	PT-7	PT-5	---	RAILINGS PT-8

ROOM FINISH SCHEDULE - LEVEL 2

LEVEL	ROOM NO.	NAME	FLOOR	BASE	NORTH WALL	SOUTH WALL	EAST WALL	WEST WALL	CEILING	ROLLER SHADES	COMMENTS
LEVEL 2	2.100A	OPEN OFFICE	CPT-1	VB	PT-1	PT-1	PT-1	PT-1	ACP-1	---	
LEVEL 2	2.100B	CORRIDOR	CPT-1	VB	PT-1	PT-1	PT-1	PT-1	ACP-1	---	
LEVEL 2	2.100C	CORRIDOR	CPT-1	VB	PT-1	PT-1	PT-1	PT-1	ACP-1	---	
LEVEL 2	2.100D	CORRIDOR	CPT-1	VB	PT-1	PT-1	PT-1	PT-1	ACP-1	---	
LEVEL 2	2.100E	CORRIDOR	CPT-1	VB	PT-1	PT-1	PT-1	PT-1	ACP-1	---	
LEVEL 2	2.100F	OPEN OFFICE	CPT-1	VB	PT-1	PT-1	PT-1	PT-1	ACP-1	---	
LEVEL 2	2.100G	HALL	CPT-1	VB	PT-1	PT-1	PT-1	PT-1	ACP-1	---	
LEVEL 2	2.100H	CORRIDOR	CPT-1	VB	PT-1	PT-1	PT-1	PT-1	ACP-2	---	
LEVEL 2	2.100M	MECH.	SC	VB	PT-1	PT-1	PT-1	PT-1	EXPOSED	---	
LEVEL 2	2.101	HUDDLE	CPT-1	VB	PT-1	PT-1	PT-1	PT-1	ACP-1	RS-1	
LEVEL 2	2.102	OFFICE	CPT-1	VB	PT-1	PT-1	PT-1	PT-1	ACP-1	RS-1	
LEVEL 2	2.103	OFFICE	CPT-1	VB	PT-1	PT-1	PT-1	PT-1	ACP-1	RS-1	
LEVEL 2	2.104	OFFICE	CPT-1	VB	PT-1	PT-1	PT-1	PT-1	ACP-1	RS-1	
LEVEL 2	2.105	OFFICE	CPT-1	VB	PT-1	PT-1	PT-1	PT-1	ACP-1	RS-1	
LEVEL 2	2.106	OFFICE	CPT-1	VB	PT-1	PT-1	PT-1	PT-1	ACP-1	RS-1	
LEVEL 2	2.106A	ELEC.	SC	VB	PT-1	PT-1	PT-1	PT-1	EXPOSED	---	
LEVEL 2	2.107	OFFICE	CPT-1	VB	PT-1	PT-1	PT-1	PT-1	ACP-1	RS-1	
LEVEL 2	2.108	OFFICE	CPT-1	VB	PT-1	PT-1	PT-1	PT-1	ACP-1	RS-1	
LEVEL 2	2.109	OFFICE	CPT-1	VB	PT-1	PT-1	PT-1	PT-1	ACP-1	RS-1	
LEVEL 2	2.110	OFFICE	CPT-1	VB	PT-1	PT-1	PT-1	PT-1	ACP-1	RS-1	
LEVEL 2	2.111	OFFICE	CPT-1	VB	PT-1	PT-1	PT-1	PT-1	ACP-1	RS-1	
LEVEL 2	2.112	OFFICE	CPT-1	VB	PT-1	PT-1	PT-1	PT-1	ACP-1	RS-1	
LEVEL 2	2.113	OFFICE	CPT-1	VB	PT-1	PT-1	PT-1	PT-1	ACP-1	RS-1	
LEVEL 2	2.114	LARGE OFFICE	CPT-1	VB	PT-1	PT-1	PT-1	PT-1	ACP-1	RS-1	
LEVEL 2	2.115	OFFICE	CPT-1	VB	PT-1	PT-1	PT-1	PT-1	ACP-1	RS-1	
LEVEL 2	2.116	OFFICE	CPT-1	VB	PT-1	PT-1	PT-1	PT-1	ACP-1	RS-1	
LEVEL 2	2.117	OFFICE	CPT-1	VB	PT-1	PT-1	PT-1	PT-1	ACP-1	RS-1	
LEVEL 2	2.118	OFFICE	CPT-1	VB	PT-1	PT-1	PT-1	PT-1	ACP-1	RS-1	
LEVEL 2	2.119	OFFICE	CPT-1	VB	PT-1	PT-1	PT-1	PT-1	ACP-1	RS-1	
LEVEL 2	2.120	OFFICE	CPT-1	VB	PT-1	PT-1	PT-1	PT-1	ACP-1	RS-1	
LEVEL 2	2.121	OFFICE	CPT-1	VB	PT-1	PT-1	PT-1	PT-1	ACP-1	RS-1	
LEVEL 2	2.122	OFFICE	CPT-1	VB	PT-1	PT-1	PT-1	PT-1	ACP-1	RS-1	
LEVEL 2	2.122A	STO.	CPT-1	VB	PT-1	PT-1	PT-1	PT-1	ACP-1	---	
LEVEL 2	2.123	HUDDLE	CPT-1	VB	PT-1	PT-1	PT-1	PT-1	ACP-1	RS-1	
LEVEL 2	2.124	CONFERENCE/ STUDY	CPT-1	VB	PT-1	PT-1	PT-1	PT-1	ACP-1	RS-3	
LEVEL 2	2.125	COLLABORATION	CPT-2	VB	---	PT-3	PT-3	PT-3	ACP-1/PT-3	RS-2	
LEVEL 2	2.126	STUDY	CPT-2	VB	PT-1	PT-1	PT-1	PT-1	ACP-1	RS-3	
LEVEL 2	2.127	TD OFFICE	CPT-1	VB	PT-1	PT-1	PT-1	PT-1	ACP-1	---	
LEVEL 2	2.128	DATA/I.T.	SC	VB	PLWOOD	PLYWOOD PTD.	PLYWOOD PTD.	PLYWOOD PTD.	EXPOSED	---	PLYWOOD WAINSCOT TO BE 8'-0"H
LEVEL 2	2.129	COPY/WORK ROOM	LVT	VB	PT-1	PT-1	PT-1	PT-1	ACP-1	---	SOLID SURFACE COUNTERTOP/ PLAM CABINETS
LEVEL 2	2.129A	COFFEE	LVT	VB	PT-1	PT-1	PT-1	PT-1	ACP-1	---	SOLID SURFACE COUNTERTOP/ PLAM CABINETS
LEVEL 2	2.130	TD OFFICE	CPT-1	VB	PT-1	PT-1	PT-1	PT-1	ACP-1	---	
LEVEL 2	2.131	NURSING MOTHER'S SUITE	CPT-1	VB	PT-1 W/ DECAL	PT-1	PT-9	PT-1	ACP-1	---	SOLID SURFACE COUNTERTOP, VINYL WALL DECAL ON ACCENT WALL
LEVEL 2	2.131A	WOMEN	CT-2	CT-1	CT-1/PT-5	CT-1/PT-5	CT-1/PT-5	CT-1/PT-5	PT-5	---	CERAMIC TILE UP TO 84" AFF AT ALL WALLS
LEVEL 2	2.131B	MEN	CT-2	CT-1	CT	CT/PT	CT/PT	CT/PT	PT-5	---	CERAMIC TILE UP TO 84" AFF AT ALL WALLS
LEVEL 2	2.132	TD OFFICE	CPT-1	VB	PT-1	PT-1	PT-1	PT-1	ACP-1	---	
LEVEL 2	2.133	UNISEX	CT-2	CT-1	CT-1/PT-5	CT-1/PT-5	CT-1/PT-5	CT-1/PT-5	PT-5	---	CERAMIC TILE UP TO 72" AFF AT ALL WALLS
LEVEL 2	2.134	JAN.	SC	VB	PT/FRP	PT/FRP	PT/FRP	PT/FRP	PT-5	---	
LEVEL 2	2.135	ROOF ACCESS	SC	VB	PT-1	PT-1	PT-1	PT-1	EXPOSED	---	
LEVEL 2	2.136	OFFICE	CPT-1	VB	PT-1	PT-1	PT-1	PT-1	ACP-1	---	
LEVEL 2	2.137	OFFICE	CPT-1	VB	PT-1	PT-1	PT-1	PT-1	ACP-1	---	
LEVEL 2	2.138	OFFICE	CPT-1	VB	PT-1	PT-1	PT-1	PT-1	ACP-1	---	
LEVEL 2	2.139	OFFICE	CPT-1	VB	PT-1	PT-1	PT-1	PT-1	ACP-1	---	
LEVEL 2	2.140	OFFICE	CPT-1	VB	PT-1	PT-1	PT-1	PT-1	ACP-1	---	
LEVEL 2	2.141	OFFICE	CPT-1	VB	PT-1	PT-1	PT-1	PT-1	ACP-1	---	
LEVEL 2	2.142	OFFICE	CPT-1	VB	PT-1	PT-1	PT-1	PT-1	ACP-1	---	
LEVEL 2	2.143	OFFICE	CPT-1	VB	PT-1	PT-1	PT-1	PT-1	ACP-1	---	
LEVEL 2	2.144	OFFICE	CPT-1	VB	PT-1	PT-1	PT-1	PT-1	ACP-1	---	
LEVEL 2	2.145	OFFICE	CPT-1	VB	PT-1	PT-1	PT-1	PT-1	ACP-1	---	
LEVEL 2	2.146	OFFICE	CPT-1	VB	PT-1	PT-1	PT-1	PT-1	ACP-1	---	
LEVEL 2	2.147	OFFICE	CPT-1	VB	PT-1	PT-1	PT-1	PT-1	ACP-1	---	
LEVEL 2	2.148	OFFICE	CPT-1	VB	PT-1	PT-1	PT-1	PT-1	ACP-1	---	
LEVEL 2	2.149	OFFICE	CPT-1	VB	PT-1	PT-1	PT-1	PT-1	ACP-1	---	
LEVEL 2	2E1	ELEV.	LVT	MFG	MFG	MFG	MFG	MFG	MFG	---	
LEVEL 2	2S1	STAIR	ICC	VB/PT-8	PT-7	PT-7	PT-7	PT-7	PT-5	---	RAILINGS PT-8
LEVEL 2	2S2	STAIR	ICC	VB/PT-8	PT-7	PT-7	PT-7	PT-7	PT-5	---	RAILINGS PT-8

ROLLER SHADE SCHEDULE

MARK	DESCRIPTION
RS-1	SURFACE-MOUNTED SINGLE MANUAL ROLLER SHADE
RS-2	CEILING-RECESSED/CEILING -MOUNTED SINGLE MOTORIZED ROLLER SHADE
RS-3	SURFACE-MOUNTED DOUBLE MANUAL ROLLER SHADE & BLACK OUT ROLLER SHADE

ROLLER SHADE NOTES:

1. NO INTERIOR WINDOW WILL RECEIVE ROLLER SHADES U.N.O.
2. ALL EXTERIOR WINDOWS TO RECEIVE ROLLER SHADES, EXCLUDING COFFEE/JUICE BAR 1.101
3. PROVIDE RS-1 AT OFFICE/ CLASSROOM/ STUDY/ PBL/ HUDDLE U.N.O.
4. PROVIDE RS-2 AT COLLABORATION ROOMS U.N.O.
5. PROVIDE RS-3 AT CONFERENCE ROOMS U.N.O.
6. REFER TO SPECIFICATIONS FOR ADDITIONAL INFORMATION ABOUT ROLLER SHADES.
7. ALL ROLLER SHADE ASSEMBLIES SHALL BE PROVIDED WITH CLEAR ANODIZED ALUMINUM FASCIA TRIM.
8. PROVIDE ONE ROLLER SHADE SEGMENT TO SPAN ENTIRE ROOM U.N.O.
9. WHERE MULTIPLE SEGMENTS ARE REQUIRED, ALIGN ROLLER SHADE SEGMENTS WITH CENTER OF MULLION.

MOUNTING HEIGHT SCHEDULE

DESCRIPTION	MOUNTING HEIGHT	COMMENT
WATER CLOSET STANDARD	1' - 3" TO RIM	FLOOR OR WALL
WATER CLOSET HC ADULT	1' - 5" TO TOP OF SEAT	FLOOR OR WALL
URINAL STANDARD	2' - 0" TO RIM	
URINAL HC	1' - 5" TO RIM	
WALL HUNG LAVATORY STANDARD	2' - 10" TO RIM	
WALL HUNG LAVATORY HC	2' - 10" TO RIM	2' - 5" MIN. CLEAR UNDER APRON
ELECTRIC DRINKING FOUNTAIN	3' - 4" TO SPOUT	
ELECTRIC DRINKING FOUNTAIN HCP	3' - 0" TO SPOUT	
TUB/SHOWER HEAD	6' - 6" TO SHOWER ARM	WAND WITH 5' - 0" HOSE REQURIED
TUB/SHOWER CONTROLS	3' - 7" TO CENTER	38" MIN., 48" MAX.
SWITCHES	4' - 0" TO CENTER	
WALL TELEPHONE OUTLETS	4' - 0" TO CENTER	
RECEPTACLES/PHONE OUTLETS	18" TO CENTER	
ABOVE COUNTER OUTLETS	6" ABOVE COUNTER	OUTLETS MOUNTED HORIZ.
PAY TELEPHONES	4' - 6" TO COIN SLOT	
THERMOSTATS	4' - 0" TO CENTER	AT OPERABLE TYPE
ALARM PULL STATIONS	4' - 0" TO CENTER	
EXTINGUISHER CABINETS	4' - 6" TO TOP OF EXT. CAB	
TOILET ACCESSORIES	REFER TO SCHED.	
STAIR HANDRAILS	3' - 0" ABOVE NOSING	ABOVE NOSING AT STAIRS
STAIR GUARDRAILS	3' - 6" TO TOP	
LAVATORY COUNTERS	2' - 10" TO TOP	2' - 5" MIN. CLEAR UNDER APRON

INSULATION LEGEND

TYPE	DESCRIPTION	SPEC. SECTION
INSUL. TYPE 1	RIGID BOARD INSULATION - R 30 (ROOF)	075100
INSUL. TYPE 2	RIGID BOARD INSULATION - R 11 (EXTERIOR MASONRY WALLS)	072100
INSUL. TYPE 3	BATT INSULATION - R 19 - UNFACED (METAL ROOF)	072100
INSUL. TYPE 4	BATT INSULATION - R 19 - FACED (STUDS)	072100
INSUL. TYPE 5	SOUND BATT INSULATION - 3" THICK (INT. PARTITIONS)	072100
INSUL. TYPE 6	DUCTLINER ON WALLS (MECH & PUMP ROOM)	072100
INSUL. TYPE 7	FIRE SAFING	078413
INSUL. TYPE 8	SPRAY FOAM INSULATION - R 11 - CLOSED CELL (UNDER SIDE OF STRUCTURE)	072100

WALL PARITION SCHEDULE

TYPE MARK	WIDTH	STUD SIZE	GWB-SIDE 1	GWB-SIDE 2	GAUGE	RATING	UL NUMBER	REMARKS
P1		7/8"	5/8"	--	22	--	--	
P2	2 1/8"	7/8"	(2)5/8"	--	22	--	--	
P3	3 1/8"	2 1/2"	5/8"	--	22	--	--	
P4	4 1/4"	3 5/8"	5/8"	--	22	--	--	
P5	6 5/8"	6"	5/8"	--	22	--	--	
P6	4 7/8"	3 5/8"	(2)5/8"	--	22	--	--	
P7	7 1/4"	6"	(2)5/8"	--	22	--	--	
P8	4 7/8"	3 5/8"	5/8"	5/8"	22	1 HR	U419	EXTENT OF RATING INDICATED ON PLANS
P9	7 1/4"	6"	5/8"	5/8"	22	1 HR	U419	EXTENT OF RATING INDICATED ON PLANS
P10	5 1/2"	3 5/8"	(2)5/8"	5/8"	25	1 HR	U419	EXTENT OF RATING INDICATED ON PLANS. TYPICAL AT CLASSROOMS, GWB-SIDE 1 TO CORRIDOR SIDE
P11	7 7/8"	6"	(2)5/8"	5/8"	22	1 HR	U419	EXTENT OF RATING INDICATED ON PLANS
P12	6 1/8"	3 5/8"	(2)5/8"	(2)5/8"	22	2 HR	U419	EXTENT OF RATING INDICATED ON PLANS
P13	8 1/2"	6"	(2)5/8"	(2)5/8"	22	2 HR	U419	EXTENT OF RATING INDICATED ON PLANS
P14	4 7/8" OR 5 1/2"	3 5/8"	(3) 5/8"	--	22	1 HR	V497	3 LAYERS MECHANICALLY FASTENED
SW1	4 1/8"	2 1/2" CH	5/8"	1" SHAFTLINER	25	1 HR	U415	
SW2	5 5/8"	4" CH	5/8"	1" SHAFTLINER	25	1 HR	U415	

WRITING SURFACE AND PROJECTION SCREEN SCHEDULE

MARK	SIZE	DESCRIPTION	MOUNTING HEIGHT	REMARKS
MARKER BOARD				
MB-4	4'-0"x4'-0"	WALL MOUNTED WHITE MARKER BOARD	3'-0" A.F.F.	
MB-6	4'-0"x6'-0"	WALL MOUNTED WHITE MARKER BOARD	3'-0" A.F.F.	
MB-8	4'-0"x8'-0"	WALL MOUNTED WHITE MARKER BOARD	3'-0" A.F.F.	
MB-12	4'-0"x12'-0"	WALL MOUNTED WHITE MARKER BOARD	3'-0" A.F.F.	
PROJECTION SCREEN				
PS-1	6'-6"x11'-7"	CEILING RECESSED MOTORIZED PROJECTION SCREEN		
PS-2	5'-6"x9'-8"	CEILING RECESSED MOTORIZED PROJECTION SCREEN		
PS-3	8'-10"x15'-8"	CEILING RECESSED MOTORIZED PROJECTION SCREEN		
TACK BOARD				
TB-1	4'-0"x8'-0"	WALL MOUNTED TACK BOARD	3'-6" A.F.F.	
TB-2	4'-0"x4'-0"	WALL MOUNTED TACK BOARD	3'-6" A.F.F.	

INTERIOR FINISH LEGEND (REFER TO SPEC SECT. 019000)

MARK	DESCRIPTION	SPEC. SEC.
FLOOR		
CT-1	6"X24" CERAMIC TILE	093000
CT-2	12"X24" CERAMIC TILE	093000
SC	SEALED CONCRETE	099110
CPT-1	MODULAR CARPET TILE	096813
LVT	LUXURY VINYL TILE	096519
ICC	INTEGRAL COLOR CONCRETE	035400
WALL		
CT-1	6"X24" CERAMIC TILE	093000
CT-4	4"X12" GLAZED CERAMIC TILE	093000
PT	PAINTED GYPSUM BOARD	099100
FRP	FIBER REINFORCED PLASTIC PANELS	097700
PLAM-1	PLAM FACED WALL PANEL	064116
MFG	BY MANUFACTURER	---
WD PANEL	VENEER PANEL	095433
BASE		
CT-3	CERAMIC/ PORCELAIN TILE BASE, BULLNOSE	093000
VB	VINYL BASE, 4"	096516
CEILING		
ACP-1	2' X 2' MINERAL FIBER ACOUSTICAL PANEL	095113
ACP-2	2' X 8' FIBERGLASS ACOUSTICAL PANEL	095113
ACP-3	2' X 2' WASHABLE FACE ACOUSTICAL PANEL	095113
PT	PAINTED GYP. BD	099100
EXPOSED	EXPOSED STRUCTURE, PTD.	---
WD PANEL	SUSPENDED VENEER PANEL	095433

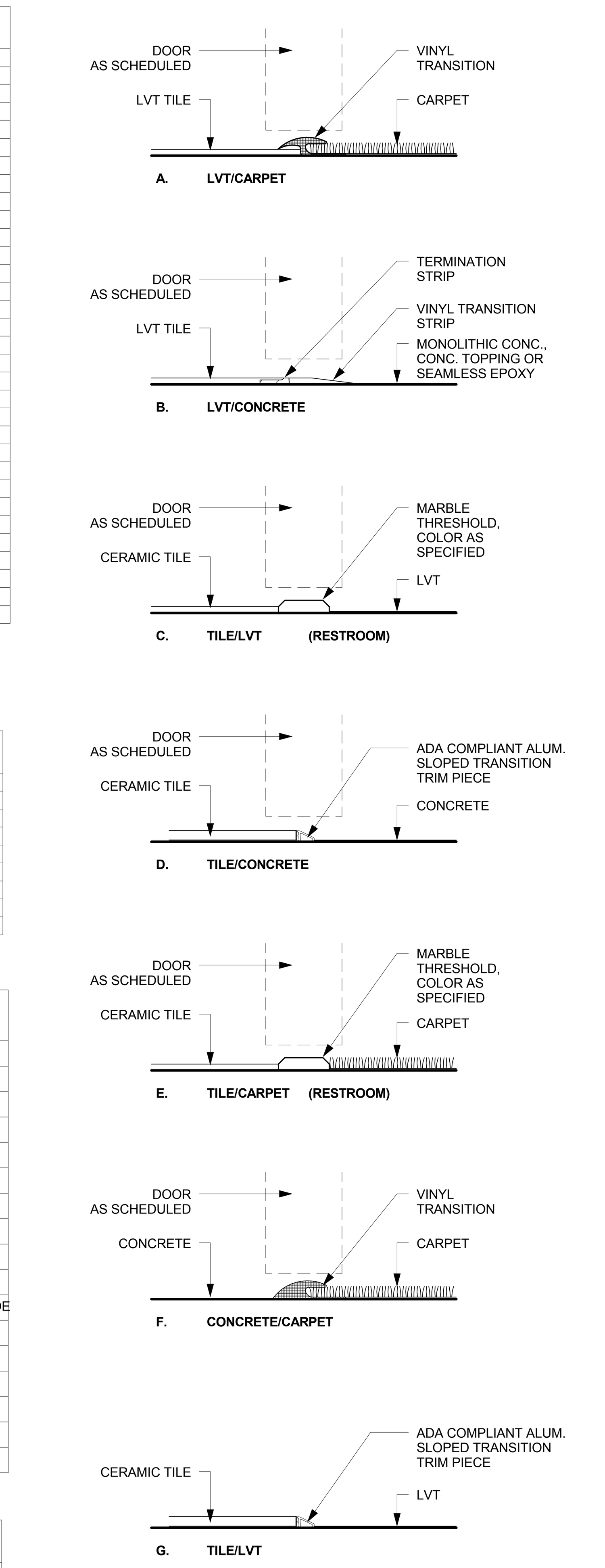

1 FLOOR TRANSITION DETAILS

3" = 1'-0"

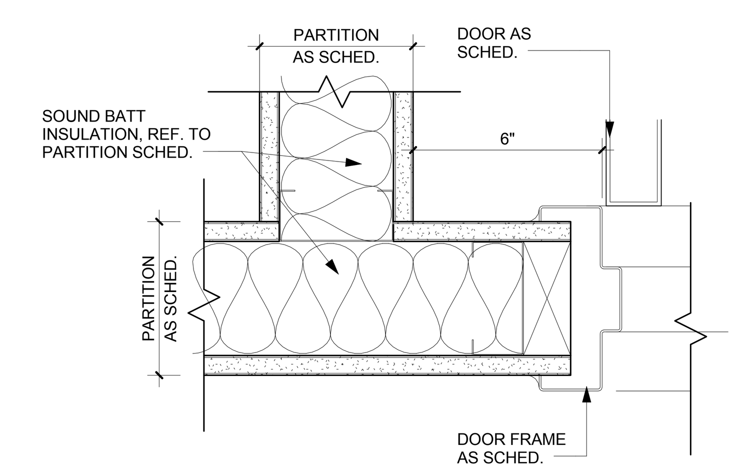

2 TYP. DOOR CLEARANCE

3" = 1'-0"

PARTITION GENERAL NOTES

1. GYPSUM BOARD TO BE "TYPE-X FIRE RATED" WHERE RATED PARTITION ASSEMBLIES ARE REQUIRED. SEE FLOOR PLANS FOR INDICATED LOCATIONS. ALL GYPSUM BOARD ATTACHMENT AND JOINT FINISHING SHALL BE IN COMPLIANCE WITH TESTED ASSEMBLY.
2. FINISH LAYERS OF GYPSUM BOARD TO BE "WATER RESISTANT" TYPE WHERE THIN SET CERAMIC TILE FINISH IS SCHEDULED.
3. ALL SCHEDULED PARITTION STUDS SHALL BE BRACED TO STRUCTURE, FULL EXTENSION OF STUDS FROM FLOOR TO STRUCTURE IS REQUIRED WHERE EXTENSION OF PARTITION IS NOTED ON CEILING PLANS OR AT CONDITIONS NOT HAVING FINISH CEILING. WHERE FINISH CEILINGS OCCUR ON BOTH SIDES OF SCHEDULED PARTITION, STUDS MAY TERMINATE AT 6" ABOVE HIGHEST ADJACENT CEILING WITH METAL STUD KNEEE BRACING TO STRUCTURE AT 4'-0" MAX.
4. PROVIDE USG # 200B METAL TRIM AT ALL FINISH LAYER EDGES OF GYPSUM BOARD WHERE PARTITION MEETS DISSIMILAR MATERIALS.
5. AT ALL INTERIORS PARTITION SHALL INCLUDE 3 1/2" FRICTION-FIT ACOUSTICAL BATT INSULATION, FULL HEIGHT AT GYPSUM WALL BOARDS.
6. AT ALL PARTITIONS WHICH HAVE EXTENSIONS TO STRUCTURE (ABOVE FINISH CEILING), PROVIDE ACOUSTICAL SEALANT AROUND ENTIRE PERIMETER AND PROVIDE ACOUSTICAL SEALANT AROUND ALL PARTITION PENETRATIONS. WHERE VOIDS GREATER THAN 1/4" EXIST, PACK VOID WITH 1.5 PCF FIBERGLASS AND SEAL AIRTIGHT, ENTIRE PARTITION ASSEMBLY SHALL ACHIEVE AN AIRTIGHT SEAL. USE FIRE RATED SEALANT AT RATED PARTITIONS.
7. AT ALL PARTITIONS, STAGGER BACK-TO-BACK OUTLET BOXES ON OPPOSITE SIDES BY TWO STUDS WIDTH. SEAL ALL BOX OPENINGS WITH ACOUSTICAL SEALANT.
8. PROVIDE FIRE RATED WOOD BLOCKING IN ALL STUD ASSEMBLIES AS REQUIRED TO PROVIDE ANCHORAGE FOR WALL MOUNTED EQUIPMENT AND CASEWORK.
9. UNLESS NOTED OTHERWISE, ALL SCHEDULED PARTITION COMPONENTS SHALL EXTEND TO A LINE 6" ABOVE THE HIGHEST ADJACENT FINISH CEILING. REFER TO FINISH SCHEDULES AND CEILING PLANS FOR CEILING HEIGHTS. WHERE NO FINISH CEILING OCCURS, ALL COMPONENTS OF ADJACENT PARTITION SHALL EXTEND TO STRUCTURE.
10. REFER TO FINISH SCHEDULES AND DETAILS FOR ALL APPLIED PANELS AND FINISHES TO BASE PARTITION AS SCHEDULED, PARTITION THICKNESS INCLUDED DONOT INCLUDE THESE TIMES.
11. DRY WALL CHASE WALL ASSEMBLIES INVOLVING TWO ROW OF METAL STUDS SHALL HAVE STUD ROWS BRACED TOGETHER WITH 12" HIGH, 5/8" GYPSUM BOARD BRACES AT 4'-0" O.C. VERTICALLY AT EACH.
12. PARTITION TYPES DONOT DETERMINE EXTERIOR WALL CONSTRUCTIONS, REFER TO WALL SECTIONS FOR CONSTRUCTION DESCRIPTIONS.
13. AT ELECTRICAL PANELS PROVIDE THICKER WALL TO CONCEAL PANEL /CONDUIT, PROVIDE DP-2B MIN.
14. FLOOR TRACK TO BE 18GA. UNLESS NOTED OTHERWISE.
15. PROVIDE METAL BACK-UP PLATE IN LIEU OF WOOD BLOCKING AT WALL MOUNTED CASEWORK, WALL MOUNTED EQUIPMENT, ETC.

muñoz & company
1017 NORTH MAIN SUITE 300
SAN ANTONIO, TEXAS 78212
O. 210.349.1163 F. 210.525.1038
WWW.MUNOZ-CO.COM

REGISTERED ARCHITECT GEOF EDWARDS 18803 STATE OF TEXAS
11.08.18

UTRGV
The University of Texas Rio Grande Valley

UNIVERSITY OF TEXAS RIO GRANDE VALLEY
SCHOOL OF MEDICINE
TEAM BASED LEARNING CENTER
PROJECT NO: 903-1159
EDINBURG, TX
100% CONSTRUCTION DOCUMENTS

Issue/Revision

#	DESCRIPTION	DATE

Sheet Title
FINISH SCHEDULES

Date
NOVEMBER 08, 2018

Project Number	Drawn By	Checked By
A17021.00	RL	CC

Sheet Number
A-401

DOOR SCHEDULE - LEVEL 1

LEVEL	NUMBER	TYPE	WIDTH	HEIGHT	DOOR MATERIAL	DOOR FINISH	FRAME MATERIAL	FRAME FINISH	HEAD DTL	JAMB DTL	SILL DTL	COMMENTS
LEVEL 1		PR (D)	6' - 0"	8' - 0"	ALUM.	KYNAR						
LEVEL 1	1.100	(PR) B	6' - 0"	7' - 10"	ALUM./GLASS	KYNAR						
LEVEL 1	1.100B	A	3' - 0"	7' - 0"	WOOD	TRANS.	ALUM.	ANODIZED				CARD READER ACCESS, REF. TO TS SHEETS
LEVEL 1	1.100E	A	3' - 0"	7' - 0"	WOOD	TRANS.	ALUM.	ANODIZED				CARD READER ACCESS, REF. TO TS SHEETS
LEVEL 1	1.100F	D	4' - 0"	8' - 0"	ALUM.	KYNAR	ALUM.	KYNAR				CARD READER ACCESS, REF. TO TS SHEETS
LEVEL 1	1.100H	D	4' - 0"	7' - 10"	ALUM.	KYNAR	ALUM.	KYNAR				CARD READER ACCESS, REF. TO TS SHEETS
LEVEL 1	1.100J	A	3' - 0"	7' - 0"	WOOD	TRANS.	HM	PTD.				CARD READER ACCESS, REF. TO TS SHEETS
LEVEL 1	1.100K	A	3' - 0"	7' - 0"	WOOD	TRANS.	HM	PTD.				CARD READER ACCESS, REF. TO TS SHEETS, 45 MIN. RATED
LEVEL 1	1.101	B	3' - 0"	7' - 10"	ALUM./GLASS	KYNAR						
LEVEL 1	1.101A	A	3' - 0"	7' - 0"	WOOD	TRANS.	ALUM.	ANODIZED				
LEVEL 1	1.101B	E	6' - 6 1/2"	7' - 0"	ALUM./GLASS	TRANS.	ALUM.	ANODIZED				
LEVEL 1	1.102	A	3' - 0"	7' - 0"	WOOD	TRANS.	ALUM.	ANODIZED				CARD READER ACCESS, REF. TO TS SHEETS
LEVEL 1	1.102A	A	3' - 0"	7' - 0"	WOOD	TRANS.	ALUM.	ANODIZED				CARD READER ACCESS, REF. TO TS SHEETS
LEVEL 1	1.102B	A	3' - 0"	7' - 0"	WOOD	TRANS.	ALUM.	ANODIZED				
LEVEL 1	1.103	A	3' - 0"	7' - 0"	WOOD	TRANS.	ALUM.	ANODIZED				CARD READER ACCESS, REF. TO TS SHEETS
LEVEL 1	1.104	A	3' - 0"	7' - 0"	WOOD	TRANS.	ALUM.	ANODIZED				CARD READER ACCESS, REF. TO TS SHEETS
LEVEL 1	1.105	A	3' - 0"	7' - 0"	WOOD	TRANS.	ALUM.	ANODIZED				CARD READER ACCESS, REF. TO TS SHEETS
LEVEL 1	1.106	A	3' - 0"	7' - 0"	WOOD	TRANS.	ALUM.	ANODIZED				CARD READER ACCESS, REF. TO TS SHEETS
LEVEL 1	1.107	A	3' - 0"	7' - 0"	WOOD	TRANS.	ALUM.	ANODIZED				CARD READER ACCESS, REF. TO TS SHEETS
LEVEL 1	1.108	A	3' - 0"	7' - 0"	WOOD	TRANS.	ALUM.	ANODIZED				CARD READER ACCESS, REF. TO TS SHEETS
LEVEL 1	1.109	A	3' - 0"	7' - 0"	WOOD	TRANS.	ALUM.	ANODIZED				CARD READER ACCESS, REF. TO TS SHEETS
LEVEL 1	1.110	A	3' - 0"	7' - 0"	WOOD	TRANS.	ALUM.	ANODIZED				
LEVEL 1	1.112	A	3' - 0"	7' - 0"	WOOD	TRANS.	ALUM.	ANODIZED				CARD READER ACCESS, REF. TO TS SHEETS
LEVEL 1	1.112A	A	3' - 0"	7' - 0"	WOOD	TRANS.	ALUM.	ANODIZED				
LEVEL 1	1.113	A	3' - 0"	7' - 0"	WOOD	TRANS.	ALUM.	ANODIZED				CARD READER ACCESS, REF. TO TS SHEETS
LEVEL 1	1.114	A	3' - 0"	7' - 0"	WOOD	TRANS.	ALUM.	ANODIZED				CARD READER ACCESS, REF. TO TS SHEETS
LEVEL 1	1.115	A	3' - 0"	7' - 0"	WOOD	TRANS.	ALUM.	ANODIZED				CARD READER ACCESS, REF. TO TS SHEETS
LEVEL 1	1.116	A	3' - 0"	7' - 0"	WOOD	TRANS.	ALUM.	ANODIZED	1/A-414	1/A-414	--	
LEVEL 1	1.117	A	3' - 0"	7' - 0"	WOOD	TRANS.	ALUM.	ANODIZED	1/A-414	1/A-414	--	
LEVEL 1	1.118	A	3' - 0"	7' - 0"	WOOD	TRANS.	HM	PTD.				45 MIN. RATED
LEVEL 1	1.119	A	3' - 0"	7' - 0"	WOOD	TRANS.	ALUM.	ANODIZED				
LEVEL 1	1.120	A	3' - 0"	7' - 0"	WOOD	TRANS.	ALUM.	ANODIZED				
LEVEL 1	1.121	(PR) B	6' - 0"	7' - 10"	ALUM./GLASS	KYNAR	ALUM.	KYNAR				CARD READER ACCESS, REF. TO TS SHEETS
LEVEL 1	1.121A	(PR) B	6' - 0"	7' - 10"	ALUM./GLASS	KYNAR	ALUM.	KYNAR				CARD READER ACCESS, REF. TO TS SHEETS
LEVEL 1	1.122	A	3' - 0"	7' - 0"	WOOD	TRANS.	ALUM.	ANODIZED				CARD READER ACCESS, REF. TO TS SHEETS
LEVEL 1	1.123	A	3' - 0"	7' - 0"	WOOD	TRANS.	ALUM.	ANODIZED				
LEVEL 1	1.123A	A	3' - 0"	7' - 0"	WOOD	TRANS.	ALUM.	ANODIZED				
LEVEL 1	1.124	A	3' - 0"	7' - 0"	WOOD	TRANS.	ALUM.	ANODIZED				
LEVEL 1	1.125	A	3' - 0"	7' - 0"	WOOD	TRANS.	ALUM.	ANODIZED				
LEVEL 1	1.126	A	3' - 0"	7' - 0"	WOOD	TRANS.	ALUM.	ANODIZED				
LEVEL 1	1.127	A	3' - 0"	7' - 0"	WOOD	TRANS.	ALUM.	ANODIZED				
LEVEL 1	1.128	A	3' - 0"	7' - 0"	WOOD	TRANS.	ALUM.	ANODIZED				
LEVEL 1	1.129	A	3' - 0"	7' - 0"	WOOD	TRANS.	ALUM.	ANODIZED				
LEVEL 1	1.130	A	3' - 0"	7' - 0"	WOOD	TRANS.	ALUM.	ANODIZED				
LEVEL 1	1.131	A	3' - 0"	7' - 0"	WOOD	TRANS.	ALUM.	ANODIZED				
LEVEL 1	1E1	---	4' - 0"	7' - 0"			BY MANUF.	BY MANUF.	---	---	---	ELEVATOR DOOR BY MANUF.
LEVEL 1	1S1	A	3' - 0"	7' - 0"	WOOD	TRANS.	HM	PTD.				60 MIN. RATED; PROVIDE MAG HOLD OPEN DEVICE
LEVEL 1	1S1A	B	3' - 0"	7' - 10"	ALUM./GLASS	KYNAR	ALUM.	ANODIZED				
LEVEL 1	1S2	A	3' - 0"	7' - 0"	WOOD	TRANS.	HM	PTD.				60 MIN. RATED
LEVEL 1	1S2A	B	3' - 0"	7' - 10"	ALUM./GLASS	KYNAR	ALUM.	KYNAR				

DOOR SCHEDULE - LEVEL 2

LEVEL	NUMBER	TYPE	WIDTH	HEIGHT	DOOR MATERIAL	DOOR FINISH	FRAME MATERIAL	FRAME FINISH	HEAD DTL	JAMB DTL	SILL DTL	COMMENTS
LEVEL 2	2.100A	A	3' - 0"	7' - 0"	WOOD	TRANS.	ALUM.	ANODIZED				CARD READER ACCESS, REF. TO TS SHEETS
LEVEL 2	2.100M	A	3' - 0"	7' - 0"	WOOD	TRANS.	HM	PTD.				CARD READER ACCESS, REF. TO TS SHEETS
LEVEL 2	2.100N	A	3' - 0"	7' - 0"	WOOD	TRANS.	ALUM.	ANODIZED				CARD READER ACCESS, REF. TO TS SHEETS
LEVEL 2	2.101	A	3' - 0"	7' - 0"	WOOD	TRANS.	ALUM.	ANODIZED				
LEVEL 2	2.102	A	3' - 0"	7' - 0"	WOOD	TRANS.	ALUM.	ANODIZED				
LEVEL 2	2.103	A	3' - 0"	7' - 0"	WOOD	TRANS.	ALUM.	ANODIZED				
LEVEL 2	2.104	A	3' - 0"	7' - 0"	WOOD	TRANS.	ALUM.	ANODIZED				
LEVEL 2	2.105	A	3' - 0"	7' - 0"	WOOD	TRANS.	ALUM.	ANODIZED				
LEVEL 2	2.106	A	3' - 0"	7' - 0"	WOOD	TRANS.	ALUM.	ANODIZED				
LEVEL 2	2.106A	A	3' - 0"	7' - 0"	WOOD	TRANS.	HM	PTD.				CARD READER ACCESS, REF. TO TS SHEETS
LEVEL 2	2.107	A	3' - 0"	7' - 0"	WOOD	TRANS.	ALUM.	ANODIZED				
LEVEL 2	2.108	A	3' - 0"	7' - 0"	WOOD	TRANS.	ALUM.	ANODIZED				
LEVEL 2	2.109	A	3' - 0"	7' - 0"	WOOD	TRANS.	ALUM.	ANODIZED				
LEVEL 2	2.110	A	3' - 0"	7' - 0"	WOOD	TRANS.	ALUM.	ANODIZED				
LEVEL 2	2.111	A	3' - 0"	7' - 0"	WOOD	TRANS.	ALUM.	ANODIZED				
LEVEL 2	2.112	A	3' - 0"	7' - 0"	WOOD	TRANS.	ALUM.	ANODIZED				
LEVEL 2	2.113	A	3' - 0"	7' - 0"	WOOD	TRANS.	ALUM.	ANODIZED				
LEVEL 2	2.114	A	3' - 0"	7' - 0 1/2"	WOOD	TRANS.	ALUM.	ANODIZED				
LEVEL 2	2.115	A	3' - 0"	7' - 0"	WOOD	TRANS.	ALUM.	ANODIZED				
LEVEL 2	2.116	A	3' - 0"	7' - 0"	WOOD	TRANS.	ALUM.	ANODIZED				
LEVEL 2	2.117	A	3' - 0"	7' - 0"	WOOD	TRANS.	ALUM.	ANODIZED				
LEVEL 2	2.118	A	3' - 0"	7' - 0"	WOOD	TRANS.	ALUM.	ANODIZED				
LEVEL 2	2.119	A	3' - 0"	7' - 0"	WOOD	TRANS.	ALUM.	ANODIZED				
LEVEL 2	2.120	A	3' - 0"	7' - 0"	WOOD	TRANS.	ALUM.	ANODIZED				
LEVEL 2	2.121	A	3' - 0"	7' - 0"	WOOD	TRANS.	ALUM.	ANODIZED				
LEVEL 2	2.122	A	3' - 0"	7' - 0"	WOOD	TRANS.	ALUM.	ANODIZED				
LEVEL 2	2.122A	A	3' - 0"	7' - 0"	WOOD	TRANS.	ALUM.	ANODIZED				
LEVEL 2	2.123	A	3' - 0"	7' - 0"	WOOD	TRANS.	ALUM.	ANODIZED				
LEVEL 2	2.124	A	3' - 0"	7' - 0"	WOOD	TRANS.	ALUM.	ANODIZED				
LEVEL 2	2.124A	A	3' - 0"	7' - 0"	WOOD	TRANS.	ALUM.	ANODIZED				
LEVEL 2	2.126	A	3' - 0"	7' - 0"	WOOD	TRANS.	ALUM.	ANODIZED				CARD READER ACCESS, REF. TO TS SHEETS
LEVEL 2	2.127	A	3' - 0"	7' - 0"	WOOD	TRANS.	ALUM.	ANODIZED				
LEVEL 2	2.128	A	3' - 0"	7' - 0"	WOOD	TRANS.	ALUM.	ANODIZED				CARD READER ACCESS, REF. TO TS SHEETS, 45 MIN. RATED
LEVEL 2	2.130	A	3' - 0"	7' - 0"	WOOD	TRANS.	ALUM.	ANODIZED				
LEVEL 2	2.131	A	3' - 0"	7' - 0"	WOOD	TRANS.	ALUM.	ANODIZED	1/A-414	1/A-414	--	CARD READER ACCESS, REF. TO TS SHEETS; DEAD BOLT LOCK W/ OCCUPANCY INDICATOR
LEVEL 2	2.131A	A	3' - 0"	7' - 0"	WOOD	TRANS.	ALUM.	ANODIZED	1/A-414	1/A-414	--	
LEVEL 2	2.131B	A	3' - 0"	7' - 0"	WOOD	TRANS.	ALUM.	ANODIZED	1/A-414	1/A-414	--	
LEVEL 2	2.132	A	3' - 0"	7' - 0"	WOOD	TRANS.	ALUM.	ANODIZED				
LEVEL 2	2.133	A	3' - 0"	7' - 0"	WOOD	TRANS.	ALUM.	ANODIZED				
LEVEL 2	2.134	A	3' - 0"	7' - 0"	WOOD	TRANS.	ALUM.	ANODIZED				
LEVEL 2	2.135	A	3' - 0"	7' - 0"	WOOD	TRANS.	ALUM.	ANODIZED				CARD READER ACCESS, REF. TO TS SHEETS
LEVEL 2	2.136	A	3' - 0"	7' - 0"	WOOD	TRANS.	ALUM.	ANODIZED				
LEVEL 2	2.137	A	3' - 0"	7' - 0"	WOOD	TRANS.	ALUM.	ANODIZED				
LEVEL 2	2.138	A	3' - 0"	7' - 0"	WOOD	TRANS.	ALUM.	ANODIZED				
LEVEL 2	2.139	A	3' - 0"	7' - 0"	WOOD	TRANS.	ALUM.	ANODIZED				
LEVEL 2	2.140	A	3' - 0"	7' - 0"	WOOD	TRANS.	ALUM.	ANODIZED				
LEVEL 2	2.141	A	3' - 0"	7' - 0"	WOOD	TRANS.	ALUM.	ANODIZED				
LEVEL 2	2.142	A	3' - 0"	7' - 0"	WOOD	TRANS.	ALUM.	ANODIZED				
LEVEL 2	2.143	A	3' - 0"	7' - 0"	WOOD	TRANS.	ALUM.	ANODIZED				
LEVEL 2	2.144	A	3' - 0"	7' - 0"	WOOD	TRANS.	ALUM.	ANODIZED				
LEVEL 2	2.145	A	3' - 0"	7' - 0"	WOOD	TRANS.	ALUM.	ANODIZED				
LEVEL 2	2.146	A	3' - 0"	7' - 0"	WOOD	TRANS.	ALUM.	ANODIZED				
LEVEL 2	2.147	A	3' - 0"	7' - 0"	WOOD	TRANS.	ALUM.	ANODIZED				
LEVEL 2	2.148	A	3' - 0"	7' - 0"	WOOD	TRANS.	ALUM.	ANODIZED				
LEVEL 2	2.149	A	3' - 0"	7' - 0"	WOOD	TRANS.	ALUM.	ANODIZED				
LEVEL 2	2E1	---	4' - 0"	7' - 0"			BY MANUF.	BY MANUF.	---	---	---	ELEVATOR DOOR BY MANUF.
LEVEL 2	2S1	A	3' - 0"	7' - 0"	WOOD	TRANS.	HM	PTD.				60 MIN. RATED; PROVIDE MAG HOLD OPEN DEVICE
LEVEL 2	2S2	A	3' - 0"	7' - 0"	WOOD	TRANS.	HM	PTD.				60 MIN. RATED; CARD READER ACCESS, ON STAIR SIDE ONLY, REFER TO TS SHEETS

DOOR TYPES

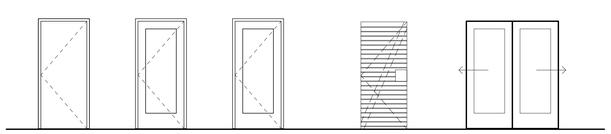

A	B	C	D	E
FLUSH	ALUM. W/ GLASS	WOOD W/ GLASS	OPERABLE LOUVER DOOR	ALUM. W/ GLASS SLIDING DOOR

DOOR GENERAL NOTES

1. PROVIDE 45 MINUTES RATED DOOR/FRAME ASSEMBLY AT ALL DOORS IN 1 HOUR RATED PARTITIONS U.N.O.
2. PROVIDE 60 MINUTES RATED DOOR/FRAME ASSEMBLY AT ALL DOORS IN 1 HOUR RATED STAIR PARTITIONS U.N.O.
3. PROVIDE 90 MINUTES RATED DOOR/FRAME ASSEMBLY AT ALL DOORS IN 2 HOUR RATED PARTITIONS U.N.O.
4. REFER TO DOOR SCHEDULE FOR DOOR & DOOR FRAME INFORMATION.
5. DOOR & DOOR FRAME FINISH WITH CUSTOM COLOR AS SPECIFIED.
6. REFER TO GLASS SCHEDULE & NOTES FOR DOOR GLAZING.
7. REFER TO DETAIL 2/A-401 FOR TYPICAL DOOR CLEARANCE U.N.O.
8. ALL DOORS ARE 1 3/4" THICK U.N.O.
9. WHERE ELECTRONIC LOCKS ARE SCHEDULED, REFER TO CONNECTIVITY DIAGRAMS

HARDWARE SETS

1. REFER TO SPECS FOR HARDWARE SETS.
2. COORDINATE ELECTRIC FOR ALARMED DOORS & ELECTRICAL HOLD OPENS.

WEATHERPROOFING SCHEDULE

MARK	DESCRIPTION	SPEC. SECTION
WP-1	FLUID APPLIED MEMBRANE AIR BARRIER	07 27 26
WP-2	FLUID APPLIED MEMBRANE BARRIER WITH ONE LAYER OF FABRIC	07 27 26
WP-4	TRANSITION MEMBRANE	07 27 26
WP-8	METAL OXIDE WATERPROOFING	07161

WEATHERPROOFING NOTES

(NOTE: WHEN MORE THAN ONE USE OPTION IS SHOWN THE PREFERRED PRODUCT IS INDICATED)

WP-1 ON ALL CMU AND CONCRETE VENEER MASONRY BACKUP WHERE OTHER WEATHERPROOFING IS NOT INDICATED.
ON GYPSUM BOARD SHEATHING DRYWALL VENEER MASONRY BACKUP.

WP-2 TYPICAL AT BASE OF EXTERIOR MASONRY AT WEEPS, AND TO TIE INTO OTHER FLASHINGS.
TYPICAL AT SHELF SUPPORTS CARRYING EXTERIOR MASONRY.
TYPICAL ACROSS CLOSED JOINTS BETWEEN DISSIMILAR MATERIALS IN BACKUP SUBSTRATE.
ACROSS GYPSUM BOARD PANEL JOINTS IN DRYWALL BACKUP.

WP-4 TYPICAL AT CONDITIONS REQUIRING MEMBRANE TO TRANSITION BETWEEN WALL AND ROOF AIR BARRIER SYSTEMS, TRANSITIONING BETWEEN FLASHING MEMBRANE AND AIR BARRIER SYSTEMS, AND FLASHING AROUND DOOR AND WNDOW ROUGH OPENINGS.

WP-8 ON INTERIOR (DRY) SIDE OF BASEMENT WALLS AND ELEVATOR PITS. WHERE NOT EXPOSED OR FINISH APPEARANCE IS NOT CRITICAL, FOR NEGATIVE HYDROSTATIC PRESSURE. (SPECIFICATION BASIS PRODUCT: IRON WATERPRELLER, EUCLID CHEMICAL CO.)

NOTE: MEMBRANES AGAINST EARTH FILL OR UNDER CONCRETE SLABS SHOULD HAVE PROTECTION AND DRAINAGE BOARD REQUIREMENTS VERIFIED.
METAL FLASHINGS SHOULD BE SEPERATELY CALLED OUT AND DETAILED.

muñoz & company
1017 NORTH MAIN SUITE 300
SAN ANTONIO, TEXAS 78212
O. 210.349.1163 F. 210.525.1038
WWW.MUNOZ-CO.COM

REGISTERED ARCHITECT ROGER EDWARDS 18809 STATE OF TEXAS

11.08.18

UTRGV
The University of Texas Rio Grande Valley

UNIVERSITY OF TEXAS RIO GRANDE VALLEY
SCHOOL OF MEDICINE
TEAM BASED LEARNING CENTER
PROJECT NO: 903-1159
EDINBURG, TX
100% CONSTRUCTION DOCUMENTS

Issue/Revision

#	DESCRIPTION	DATE

Sheet Title
DOOR SCHEDULES

Date
NOVEMBER 08, 2018

Project Number	Drawn By	Checked By
A17021.00	RL	RR

Sheet Number
A-402

EXTERIOR WINDOW TYPES

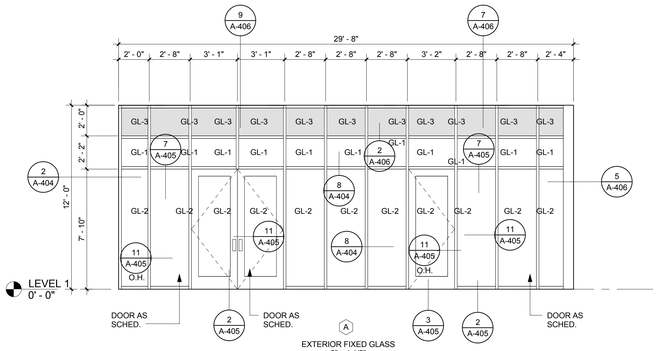

A
EXTERIOR FIXED GLASS
2" x 4 1/2"
EXTRUDED ALUMINUM FRAME
KYNAR FINISH

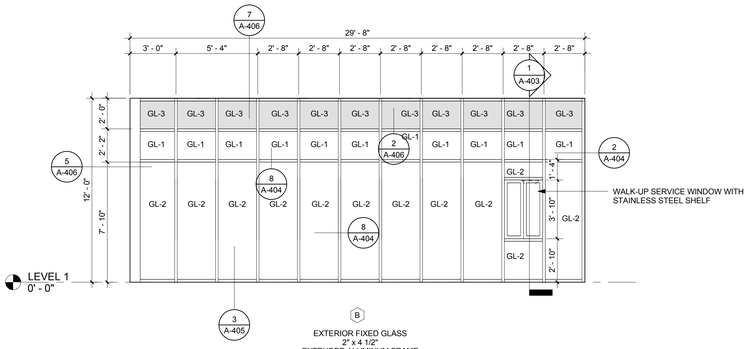

B
EXTERIOR FIXED GLASS
2" x 4 1/2"
EXTRUDED ALUMINUM FRAME
KYNAR FINISH

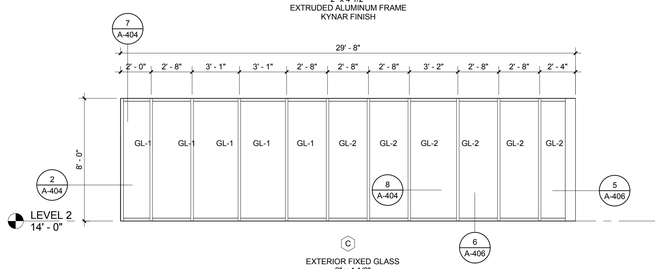

C
EXTERIOR FIXED GLASS
2" x 4 1/2"
EXTRUDED ALUMINUM FRAME
KYNAR FINISH

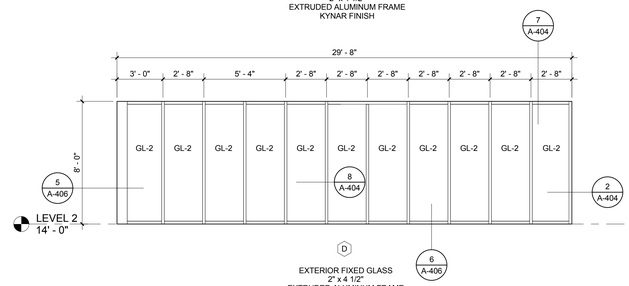

D
EXTERIOR FIXED GLASS
2" x 4 1/2"
EXTRUDED ALUMINUM FRAME
KYNAR FINISH

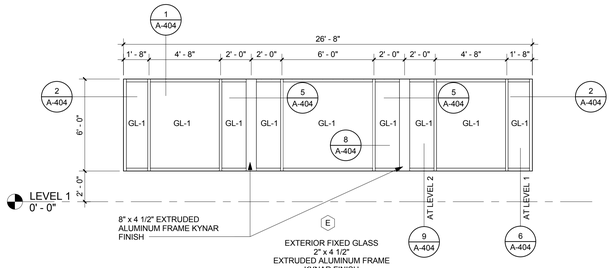

E
EXTERIOR FIXED GLASS
2" x 4 1/2"
EXTRUDED ALUMINUM FRAME
KYNAR FINISH

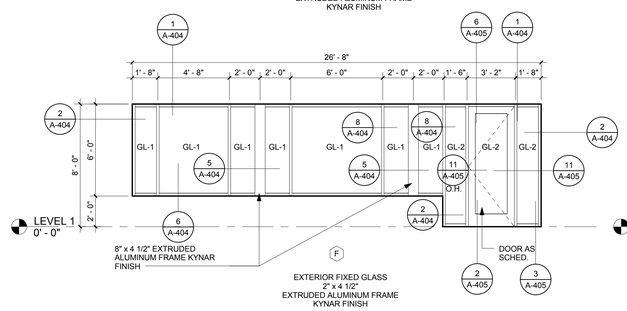

F
EXTERIOR FIXED GLASS
2" x 4 1/2"
EXTRUDED ALUMINUM FRAME
KYNAR FINISH

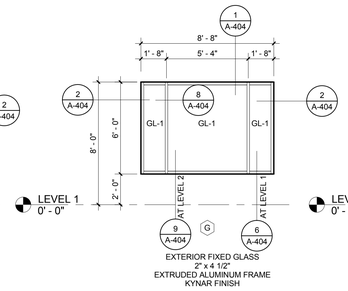

G
EXTERIOR FIXED GLASS
2" x 4 1/2"
EXTRUDED ALUMINUM FRAME
KYNAR FINISH

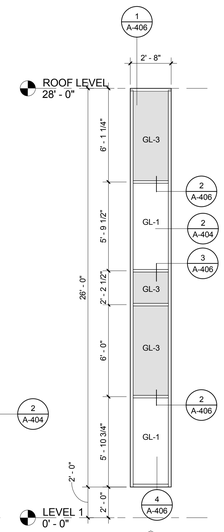

H
EXTERIOR FIXED GLASS
2" x 4 1/2"
EXTRUDED ALUMINUM FRAME
KYNAR FINISH

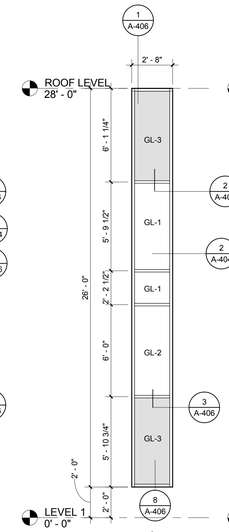

J
EXTERIOR FIXED GLASS
2" x 4 1/2"
EXTRUDED ALUMINUM FRAME
KYNAR FINISH

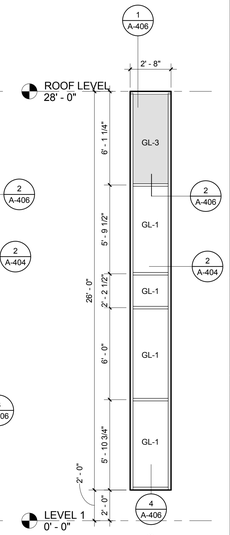

K
EXTERIOR FIXED GLASS
2" x 4 1/2"
EXTRUDED ALUMINUM FRAME
KYNAR FINISH

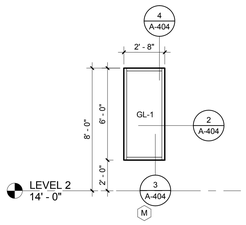

M
EXTERIOR FIXED GLASS
2" x 4 1/2"
EXTRUDED ALUMINUM FRAME
KYNAR FINISH

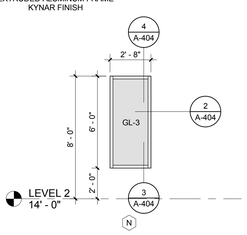

N
EXTERIOR FIXED GLASS
2" x 4 1/2"
EXTRUDED ALUMINUM FRAME
KYNAR FINISH

LOUVER TYPES

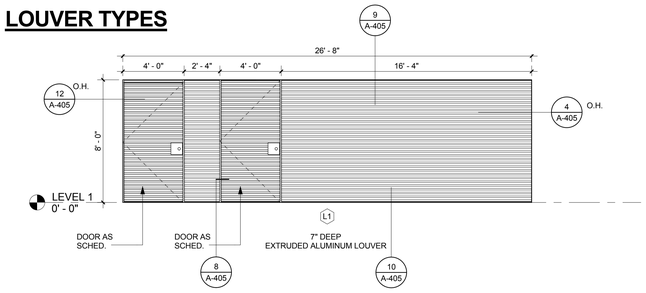

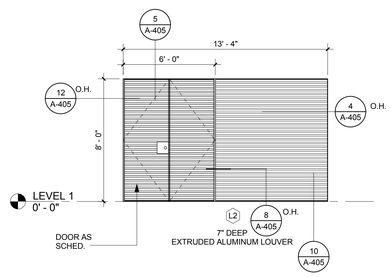

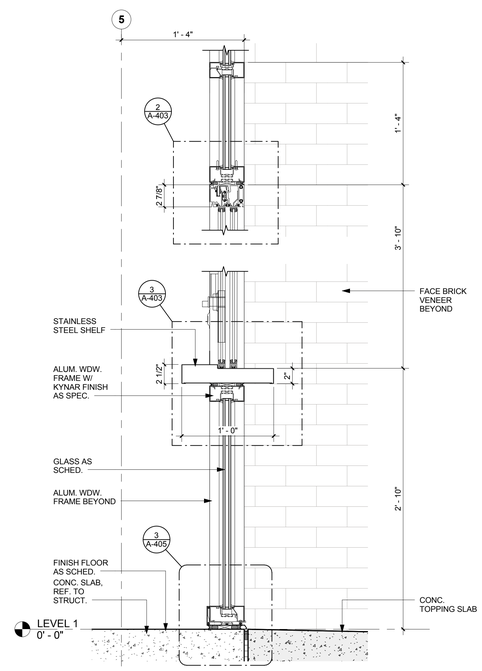

1 SERVICE WINDOW SECTION
1 1/2" = 1'-0"

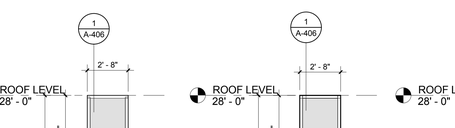

2 SERVICE WINDOW DETAIL
3" = 1'-0"

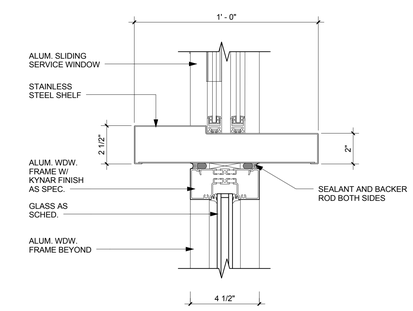

3 SERVICE WINDOW DETAIL
3" = 1'-0"

WINDOW NOTES

1. ALL EXTERIOR WINDOWS TO BE EXTRUDED ALUMINUM FRAME WITH KYNAR FINISH WITH CUSTOM COLOR AS SPECIFIED.

LOUVER NOTES

1. PROVIDE INSECT SCREEN AT ALL LOUVER SECTIONS.
2. PROVIDE ALUMINUM BLANK OFF PANEL AND INSULATION AT ALL NON-ACTIVE LOUVER SECTIONS - COORDINATE WITH MEP.
3. THIS SCHEDULE IS FOR LOUVER SIZE AND CONSTRUCTION ONLY. REF. TO MEP DRAWINGS FOR LOUVER OPERATION REQUIREMENTS INCLUDING DAMPER OPERATION.

GLASS SCHEDULE

TYPE	DESCRIPTION
GL-1	1" INSULATED GLASS UNIT SOLAR BAN 70 XL, CLEAR
GL-2	1" INSULATED GLASS UNIT SOLAR BAN 70 XL, CLEAR, TEMPERED
GL-3	1" INSULATED SPANDREL GLASS W/ CUSTOM COLOR AS SELECTED BY ARCHITECT.
GL-4	1/4" CLEAR TEMPERED GLASS
GL-5	1/4" MIRROR GLASS
GL-6	1/4" ONE WAY GLASS
GL-7	BULLET RESISTANT GLASS
GL-8	1/2" CLEAR TEMPERED GLASS

GLASS NOTES:

1. USE GLASS TYPE GL-1 AT ALL EXTERIOR FIXED GLASS WINDOWS & VISION GLASS OF CURTAIN WALL WINDOWS U.N.O.
2. USE GLASS TYPE GL-4 AT ALL INTERIOR FIXED GLASS WINDOWS & DOOR AS REQUIRED BY CODE, U.N.O.
3. USE GLASS TYPE GL-5 AT ALL TOILET ROOM MIRRORS.
4. USE GLASS TYPE GL-2 AT EXTERIOR CURTAIN WALL WINDOWS AS REQUIRED PER CODE.
5. USE GLASS TYPE GL-3 AT ALL EXTERIOR SPANDREL GLASS OF CURTAIN WALL WINDOWS U.N.O.
6. EXTERIOR GLASS TO MEET WIND RATING.
7. SEE INTERIOR ELEVATIONS FOR ALL INTERIOR GLASS U.N.O.

muñoz & company
1017 NORTH MAIN SUITE 300
SAN ANTONIO, TEXAS 78212
O. 210.349.1163 F. 210.525.1038
W W W . M U N O Z - C O . C O M

REGISTERED ARCHITECT
GEOF EDWARDS
18803
STATE OF TEXAS
11.08.18

UTRGV
The University of Texas Rio Grande Valley

UNIVERSITY OF TEXAS RIO GRANDE VALLEY
SCHOOL OF MEDICINE
TEAM BASED LEARNING CENTER
PROJECT NO: 903-1159
EDINBURG, TX
100% CONSTRUCTION DOCUMENTS

Issue/Revision

#	DESCRIPTION	DATE

Sheet Title
WINDOW TYPES

Date
NOVEMBER 08, 2018

Project Number	Drawn By	Checked By
A17021.00	RL	CC

Sheet Number
A-403

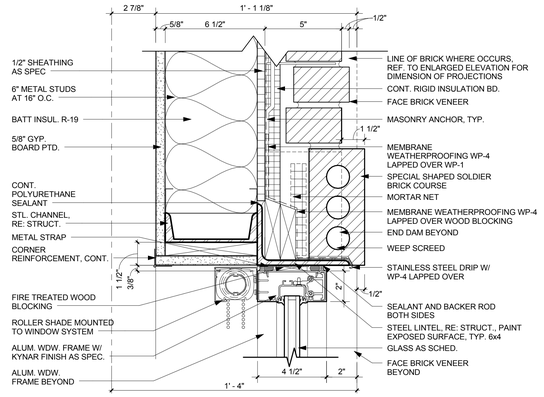

1 ALUM. WDW HEAD DETAIL
3" = 1'-0"

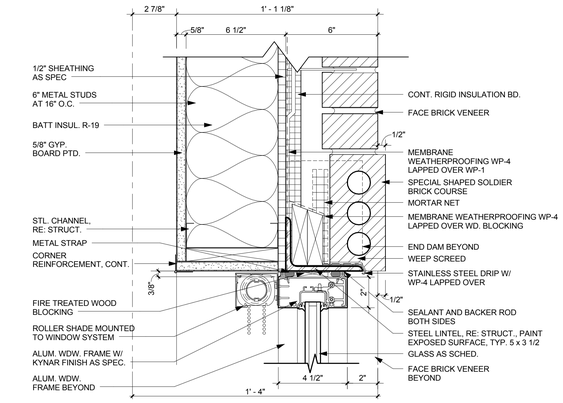

4 ALUM. WDW HEAD DETAIL
3" = 1'-0"

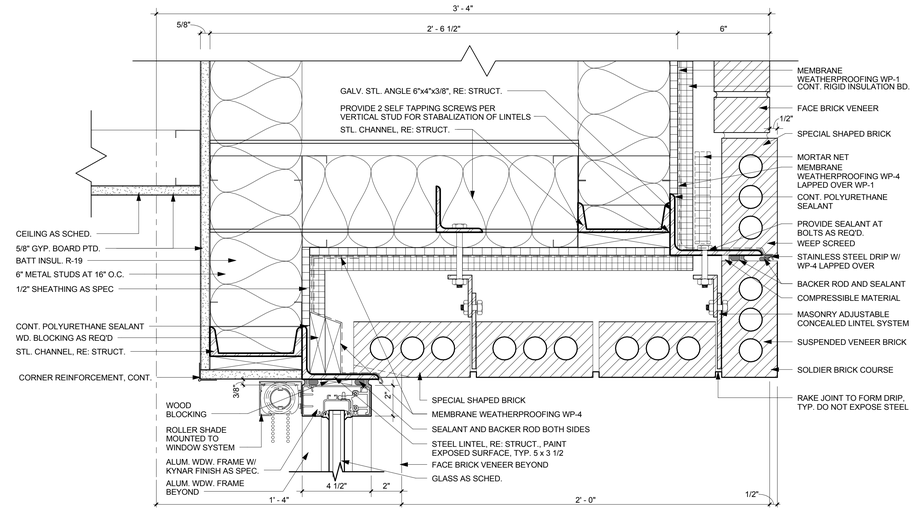

7 ALUM. WDW HEAD DETAIL
3" = 1'-0"

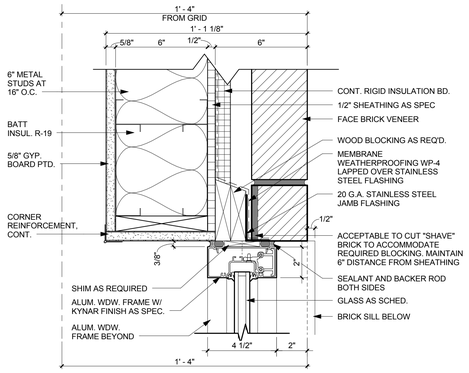

2 ALUM. WDW JAMB DETAIL
3" = 1'-0"

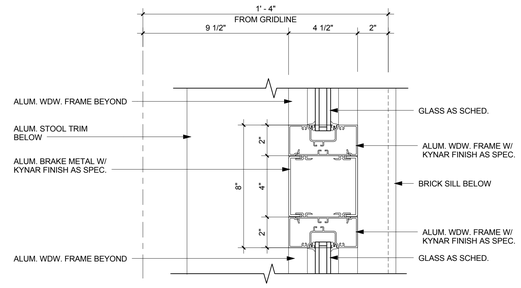

5 ALUM. WDW MULLION DETAIL
3" = 1'-0"

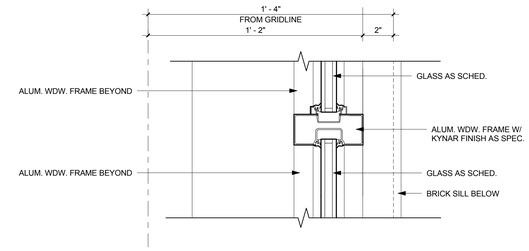

8 ALUM. WDW TRANSOM/MULLION SIM DETAIL
3" = 1'-0"

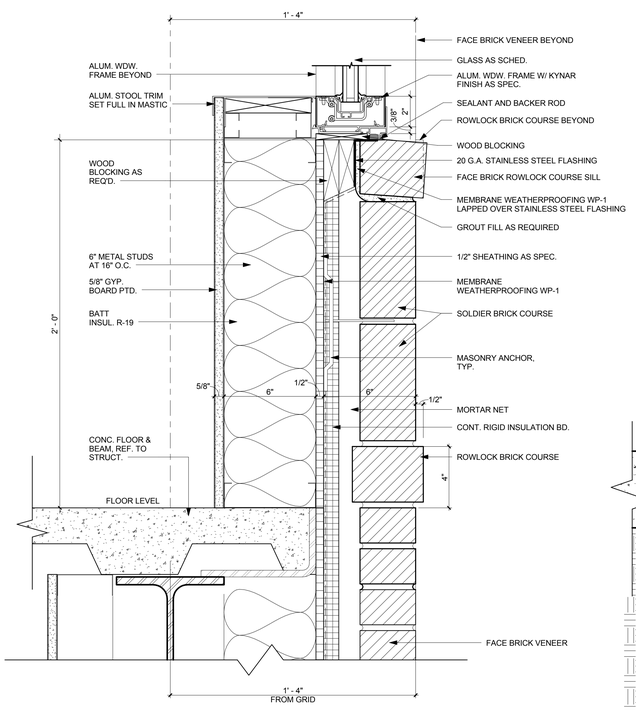

3 ALUM. WDW SILL DETAIL W/ ROWLOCK
3" = 1'-0"

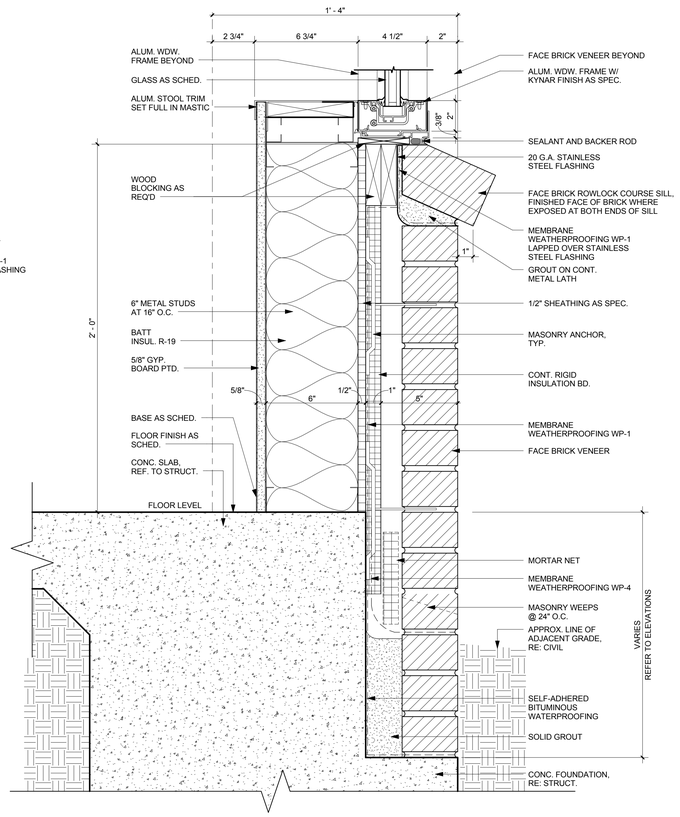

6 ALUM. WDW SILL DETAIL TYPICAL
3" = 1'-0"

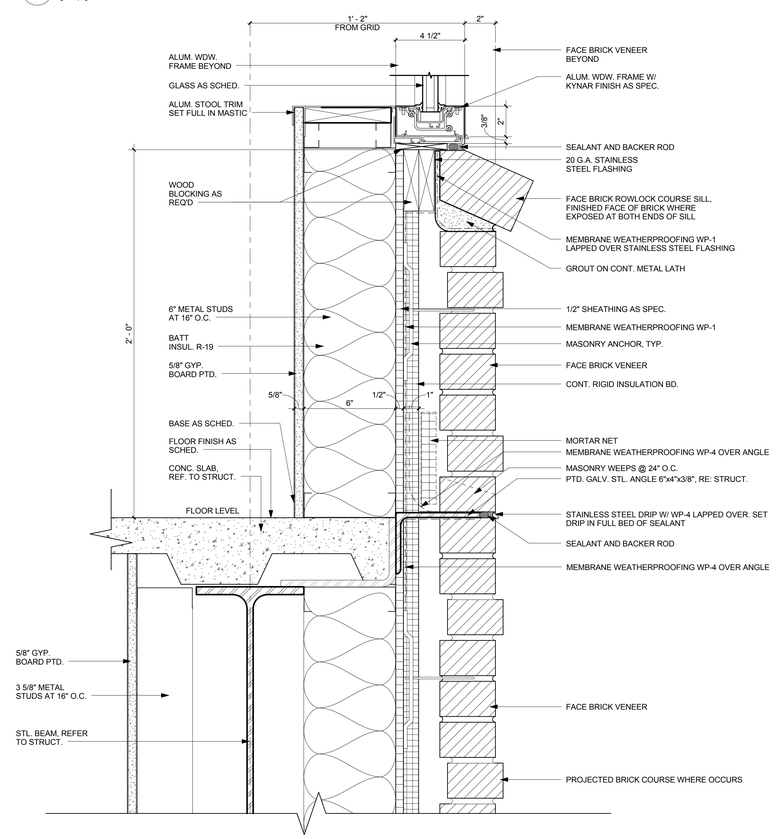

9 ALUM. WDW SILL DETAIL TYPICAL AT LEVEL 2
3" = 1'-0"

muñoz & company
1017 NORTH MAIN SUITE 300
SAN ANTONIO, TEXAS 78212
O. 210.349.1163 F. 210.525.1038
W W W . M U N O Z - C O . C O M

REGISTERED ARCHITECT GREGORY EDWARD CASTILLO 18809 STATE OF TEXAS

11.08.18

UTRGV
The University of Texas Rio Grande Valley

UNIVERSITY OF TEXAS RIO GRANDE VALLEY
SCHOOL OF MEDICINE
TEAM BASED LEARNING CENTER
PROJECT NO: 903-1159
EDINBURG, TX
100% CONSTRUCTION DOCUMENTS

Issue/Revision

#	DESCRIPTION	DATE

Sheet Title
DOOR AND WINDOW DETAILS

Date
NOVEMBER 08, 2018

Project Number	Drawn By	Checked By
A17021.00	RL	CC

Sheet Number
A-404

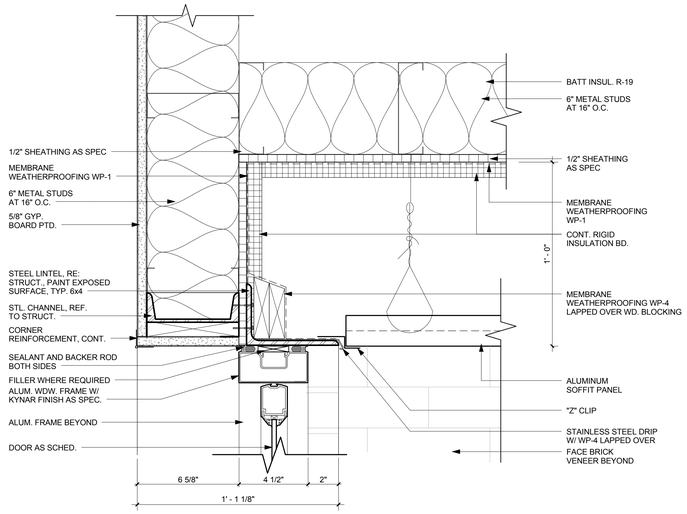

1 ALUM. DOOR HEAD DETAIL
3" = 1'-0"

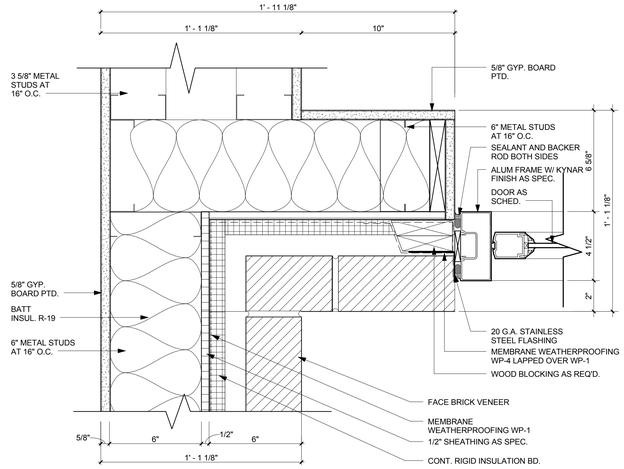

5 ALUM. DOOR JAMB DETAIL
3" = 1'-0"

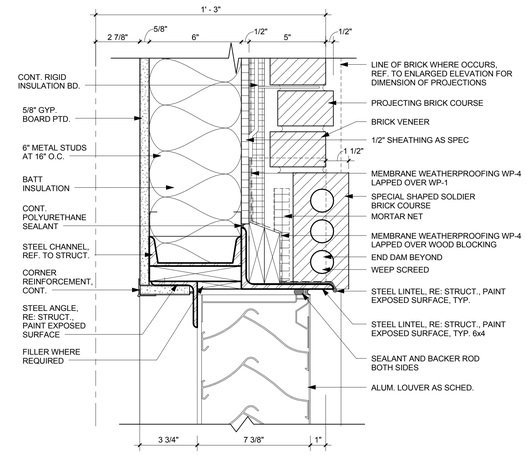

9 LOUVER HEAD DETAIL
3" = 1'-0"

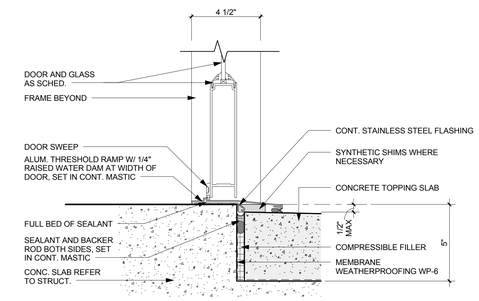

2 ALUM. DOOR SILL DETAIL
3" = 1'-0"

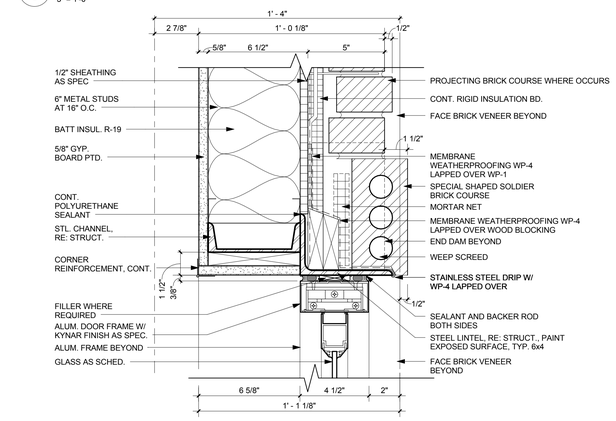

6 ALUM. DOOR HEAD DETAIL
3" = 1'-0"

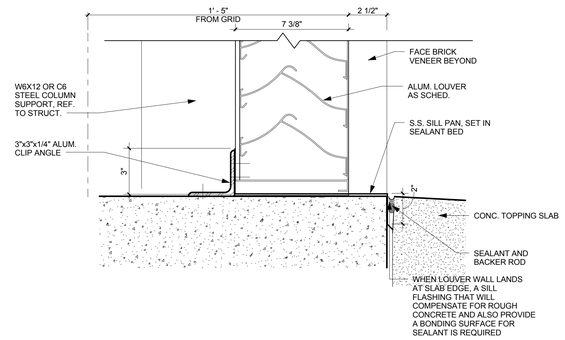

10 LOUVER SILL DETAIL
3" = 1'-0"

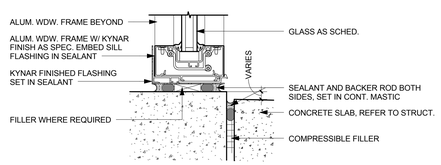

3 ALUM. WDW SILL DETAIL
3" = 1'-0"

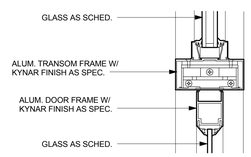

7 ALUM. DOOR HEAD AT TRANSOM
3" = 1'-0"

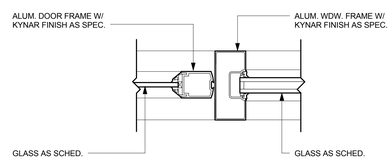

11 ALUM. DOOR/ MULLION JAMB DETAIL
3" = 1'-0"

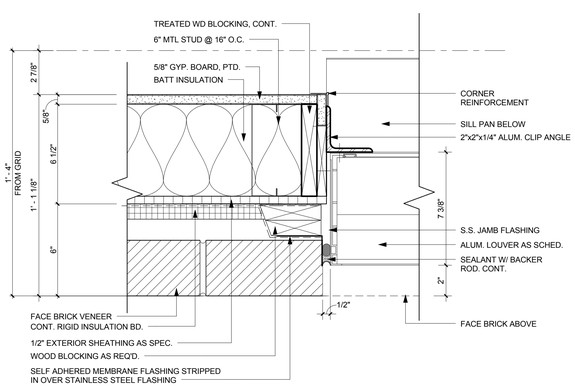

4 LOUVER JAMB DETAIL
3" = 1'-0"

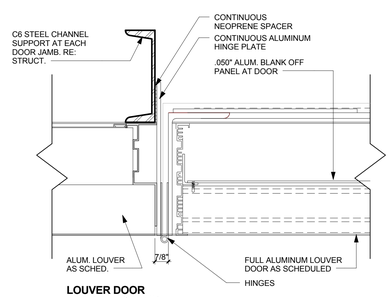

LOUVER DOOR JAMB AT LOUVER

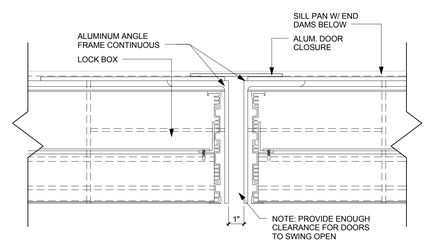

LOUVER DOOR JOINT CONNECTION

8 LOUVER - OPERABLE DOOR JAMB DETAIL
3" = 1'-0"

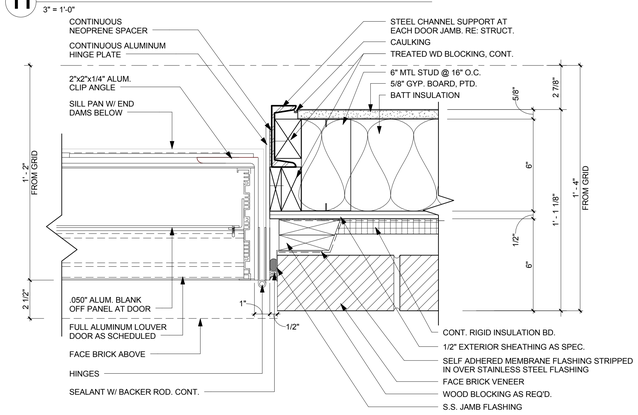

12 LOUVER DOOR W/ BRICK JAMB DETAIL
3" = 1'-0"

muñoz & company
1017 NORTH MAIN SUITE 300
SAN ANTONIO, TEXAS 78212
O. 210.349.1163 F. 210.525.1038
W W W . M U N O Z - C O . C O M

REGISTERED ARCHITECT
GREG EDWARDS
18803
STATE OF TEXAS
11.08.18

UTRGV
The University of Texas Rio Grande Valley

UNIVERSITY OF TEXAS RIO GRANDE VALLEY
SCHOOL OF MEDICINE
TEAM BASED LEARNING CENTER
PROJECT NO: 903-1159
EDINBURG, TX
100% CONSTRUCTION DOCUMENTS

Issue/Revision

#	DESCRIPTION	DATE

Sheet Title
DOOR AND WINDOW DETAILS

Date
NOVEMBER 08, 2018

Project Number	Drawn By	Checked By
A17021.00	RL	CC

Sheet Number
A-405

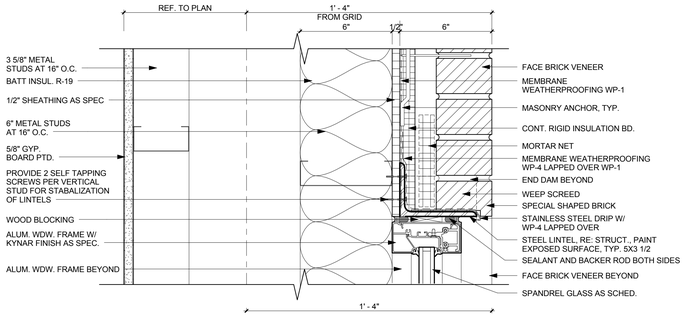

1 ALUM. WDW HEAD DETAIL
3" = 1'-0"

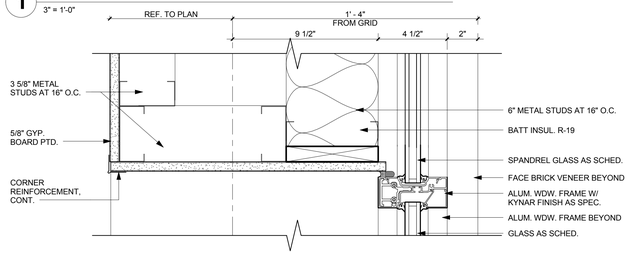

2 ALUM. WDW HEAD DETAIL
3" = 1'-0"

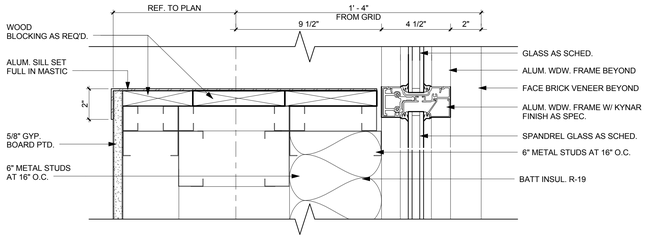

3 ALUM. WDW SILL AT SPANDREL
3" = 1'-0"

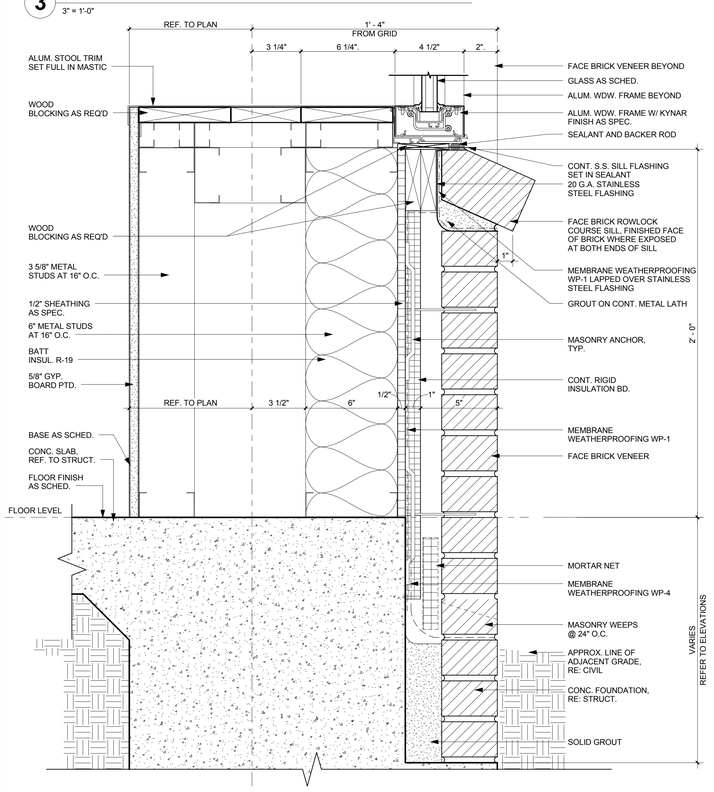

4 ALUM. WDW SILL DETAIL
3" = 1'-0"

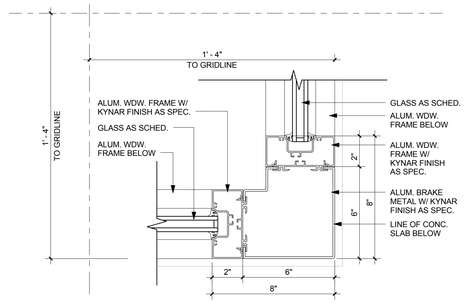

5 ALUM. WDW MULLION DETAIL
3" = 1'-0"

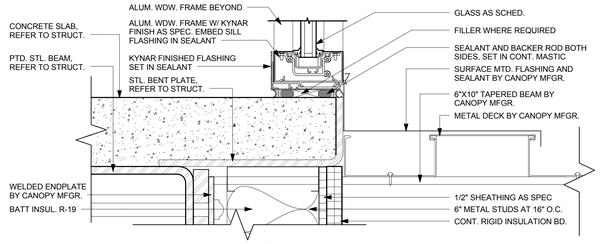

6 ALUM. STOREFRONT SILL DETAIL
3" = 1'-0"

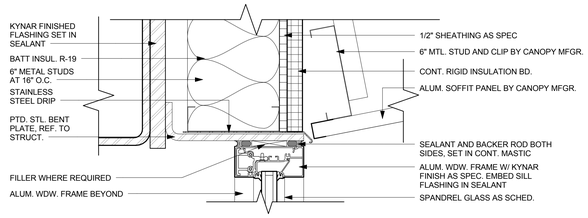

7 ALUM. STOREFRONT HEAD DETAIL
3" = 1'-0"

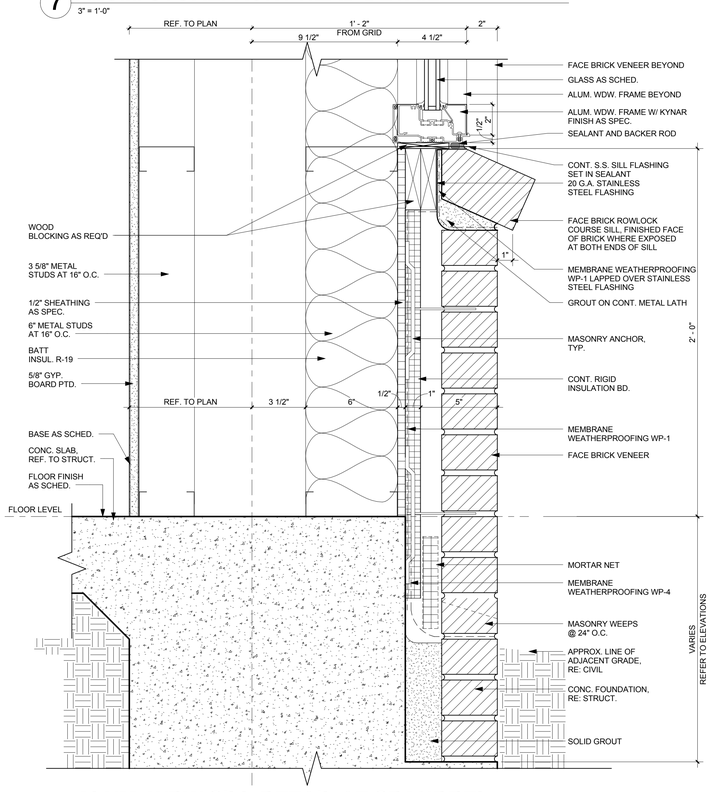

8 ALUM. WDW SILL DETAIL AT SPANDREL
3" = 1'-0"

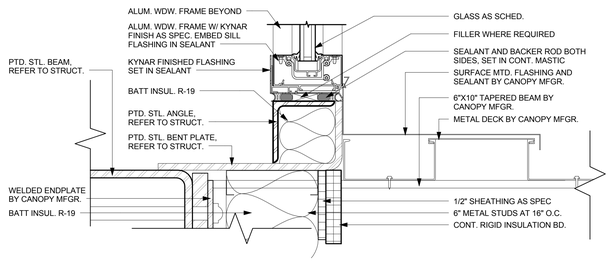

9 ALUM. STOREFRONT SILL DETAIL
3" = 1'-0"

muñoz & company
1017 NORTH MAIN SUITE 300
SAN ANTONIO, TEXAS 78212
O. 210.349.1163 F. 210.525.1038
W W W . M U N O Z - C O . C O M

REGISTERED ARCHITECT GREGORY EDWARDS 18803 STATE OF TEXAS

11.08.18

UTRGV
The University of Texas Rio Grande Valley

UNIVERSITY OF TEXAS RIO GRANDE VALLEY
SCHOOL OF MEDICINE
TEAM BASED LEARNING CENTER
PROJECT NO: 903-1159
EDINBURG, TX
100% CONSTRUCTION DOCUMENTS

Issue/Revision

#	DESCRIPTION	DATE

Sheet Title
DOOR AND WINDOW DETAILS

Date
NOVEMBER 08, 2018

Project Number	Drawn By	Checked By
A17021.00	RL	CC

Sheet Number
A-406

INTERIOR ALUM. WINDOW TYPES

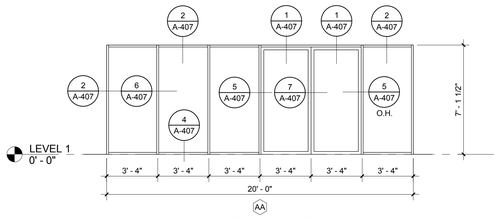

1 1/2" INTERIOR ALUMINUM FRAME

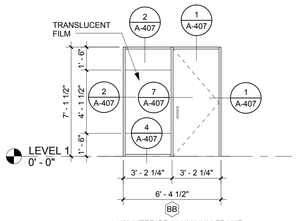

1 1/2" INTERIOR ALUMINUM FRAME

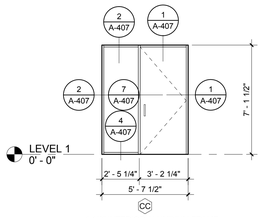

1 1/2" INTERIOR ALUMINUM FRAME

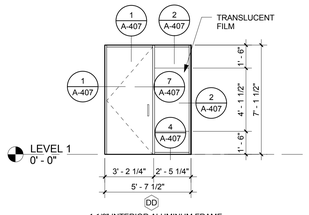

1 1/2" INTERIOR ALUMINUM FRAME

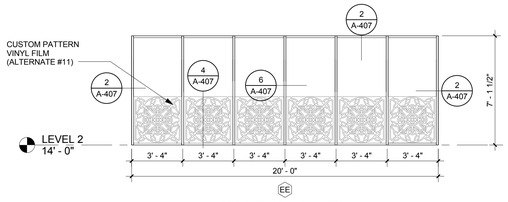

1 1/2" INTERIOR ALUMINUM FRAME

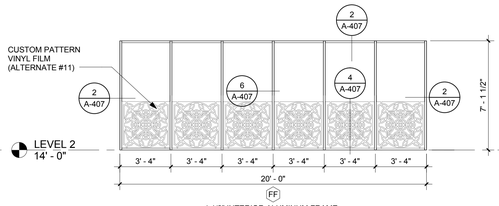

1 1/2" INTERIOR ALUMINUM FRAME

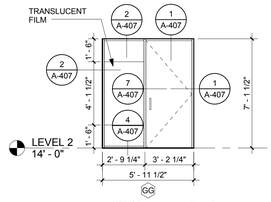

1 1/2" INTERIOR ALUMINUM FRAME

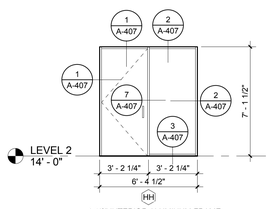

1 1/2" INTERIOR ALUMINUM FRAME

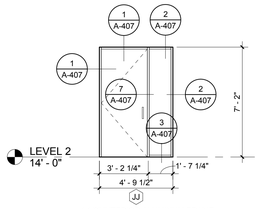

1 1/2" INTERIOR ALUMINUM FRAME

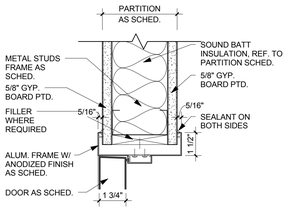

1 INT. ALUM. DOOR HEAD/JAMB DETAIL
3" = 1'-0"

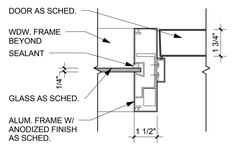

5 INT. ALUM. WDW/DOOR DETAIL
3" = 1'-0"

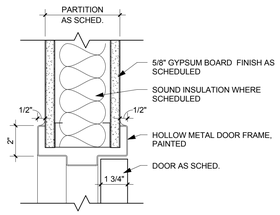

8 INT. HM. DOOR - HEAD/ JAMB SIM.
3" = 1'-0"

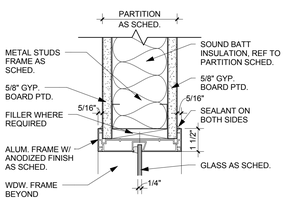

2 INT. ALUM. HEAD/ JAMB DETAIL SIM.
3" = 1'-0"

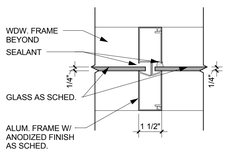

6 INT. ALUM. MULLION DETAIL
3" = 1'-0"

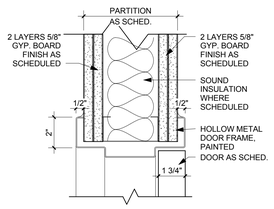

9 INT. HM. DOOR- HEAD/ JAMB SIM
3" = 1'-0"

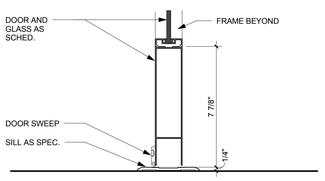

3 INT. ALUM. DOOR SILL DETAIL
3" = 1'-0"

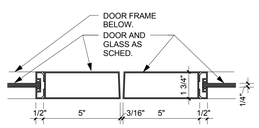

7 INT. ALUM. DOOR STILE DETAIL
3" = 1'-0"

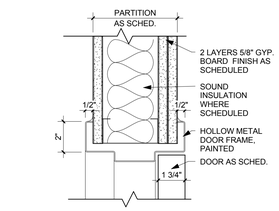

10 INT. HM. DOOR- HEAD/ JAMB SIM
3" = 1'-0"

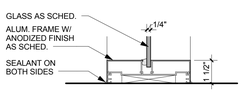

4 INT. ALUM. SILL DETAIL
3" = 1'-0"

muñoz & company
1017 NORTH MAIN SUITE 300
SAN ANTONIO, TEXAS 78212
O. 210.349.1163 F. 210.525.1038
W W W . M U N O Z - C O . C O M

REGISTERED ARCHITECT
R. OF EDWARDS
18803
STATE OF TEXAS

11.08.18

UTRGV
The University of Texas Rio Grande Valley

UNIVERSITY OF TEXAS RIO GRANDE VALLEY
SCHOOL OF MEDICINE
TEAM BASED LEARNING CENTER
PROJECT NO: 903-1159
EDINBURG, TX
100% CONSTRUCTION DOCUMENTS

Issue/Revision

#	DESCRIPTION	DATE

Sheet Title
DOOR AND WINDOW DETAILS INTERIOR

Date
NOVEMBER 08, 2018

Project Number	Drawn By	Checked By
A17021.00	RL	CC

Sheet Number
A-407

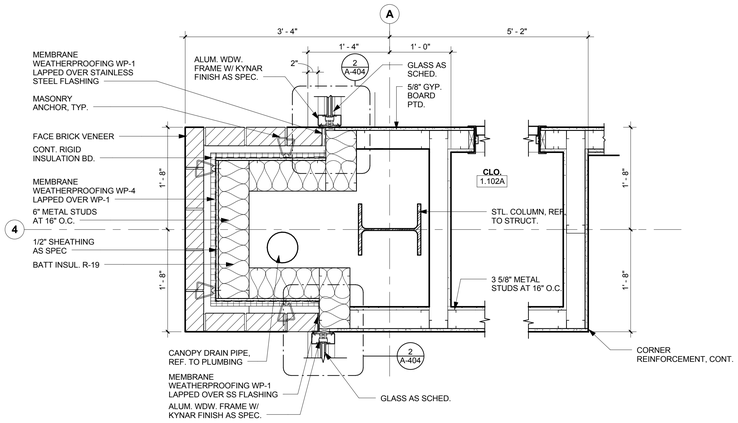

1 **PLAN DETAIL**
1" = 1'-0"

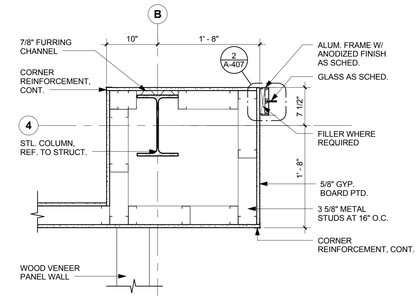

5 **PLAN DETAIL**
1" = 1'-0"

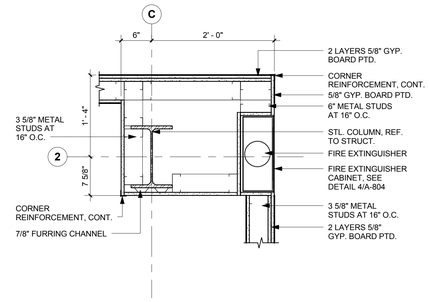

6 **PLAN DETAIL**
1" = 1'-0"

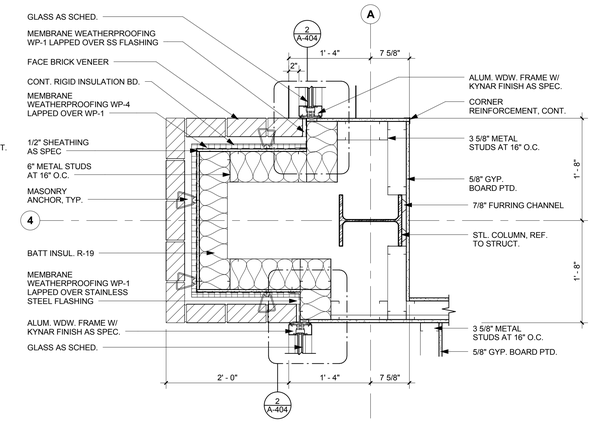

13 **PLAN DETAIL**
1" = 1'-0"

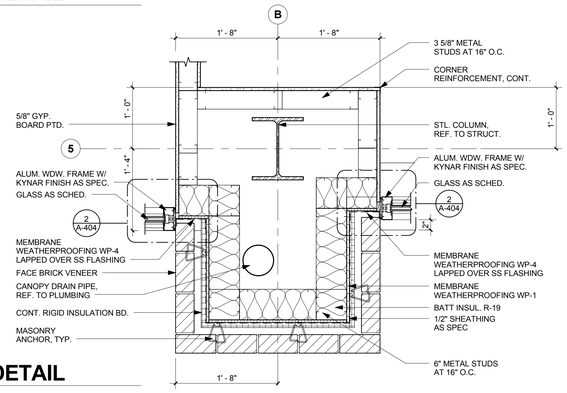

2 **PLAN DETAIL**
1" = 1'-0"

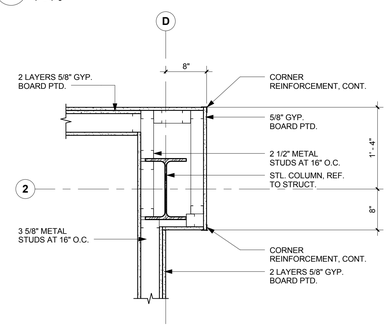

7 **PLAN DETAIL**
1" = 1'-0"

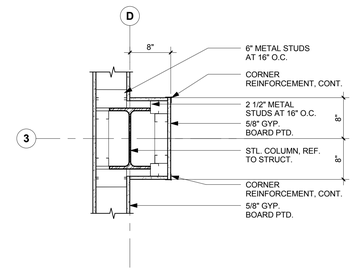

8 **PLAN DETAIL**
1" = 1'-0"

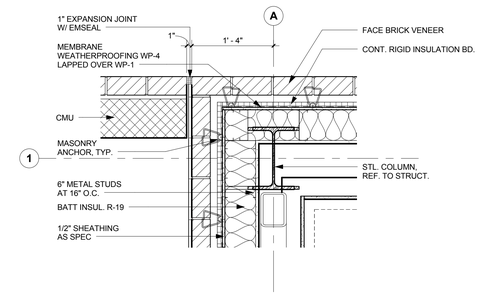

14 **PLAN DETAIL - EXPANSION JOINT**
1" = 1'-0"

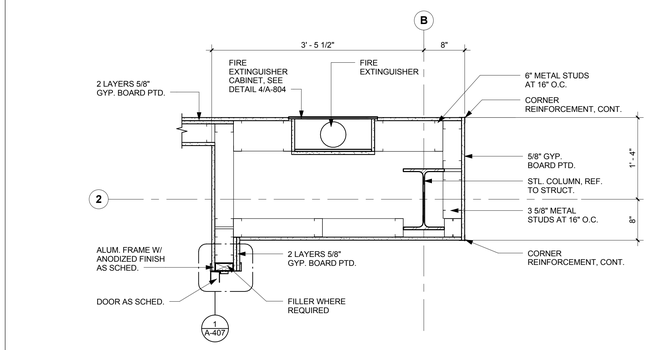

3 **PLAN DETAIL**
1" = 1'-0"

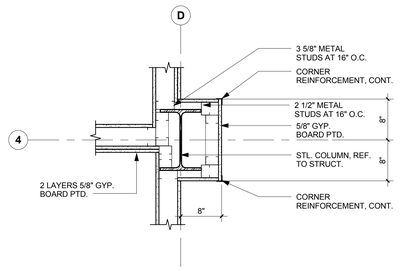

9 **PLAN DETAIL**
1" = 1'-0"

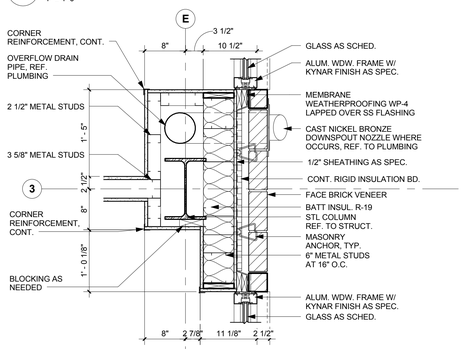

10 **PLAN DETAIL**
1" = 1'-0"

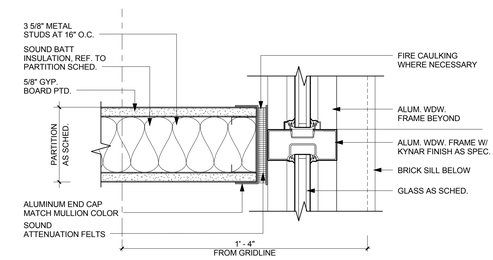

15 **ALUM. WDW MULLION DETAIL**
3" = 1'-0"

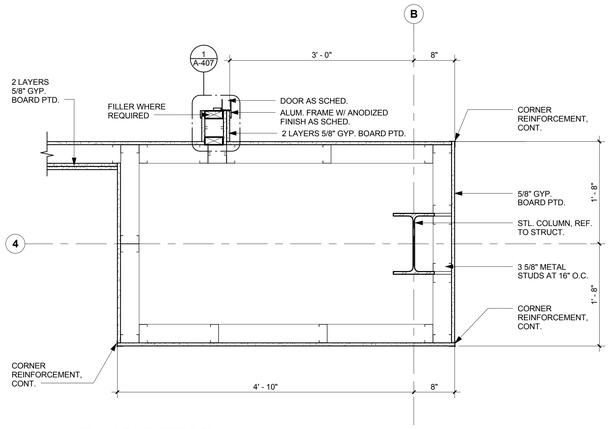

4 **PLAN DETAIL**
1" = 1'-0"

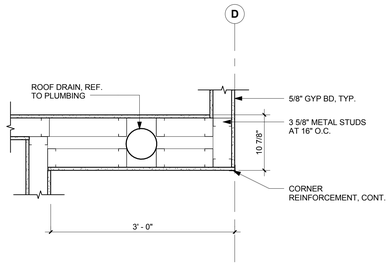

11 **PLAN DETAIL**
1" = 1'-0"

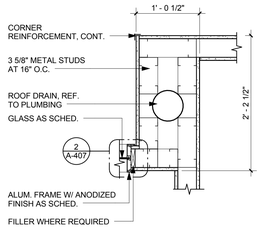

12 **PLAN DETAIL**
1" = 1'-0"

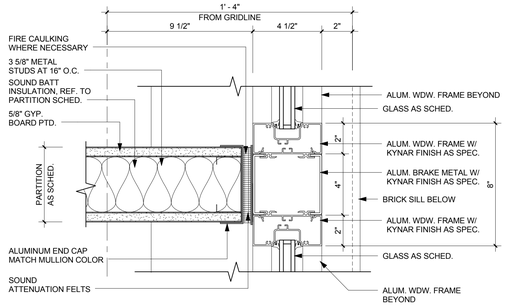

16 **ALUM. WDW MULLION DETAIL**
3" = 1'-0"

muñoz & company
1017 NORTH MAIN SUITE 300
SAN ANTONIO, TEXAS 78212
O. 210.349.1163 F. 210.525.1038
W W W . M U N O Z - C O . C O M

REGISTERED ARCHITECT — JOSEPH EDWARD GRAF — 18803 — STATE OF TEXAS

11.08.18

UTRGV
The University of Texas Rio Grande Valley

UNIVERSITY OF TEXAS RIO GRANDE VALLEY
SCHOOL OF MEDICINE TEAM BASED LEARNING CENTER
PROJECT NO: 903-1159
EDINBURG, TX
100% CONSTRUCTION DOCUMENTS

Issue/Revision

#	DESCRIPTION	DATE

Sheet Title
PLAN DETAILS

Date
NOVEMBER 08, 2018

Project Number	Drawn By	Checked By
A17021.00	RL	CC

Sheet Number
A-408

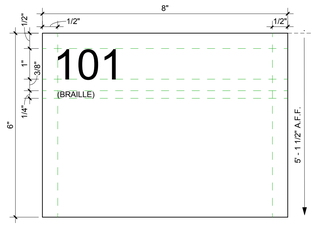

1 TYPE - 1 NUMBER
6" = 1'-0"

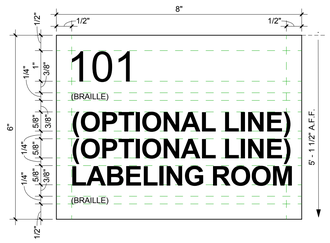

2 TYPE - 2 NUMBER/LABEL
6" = 1'-0"

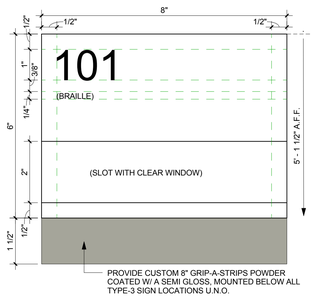

3 TYPE - 3 NUMBER/SLOT
6" = 1'-0"

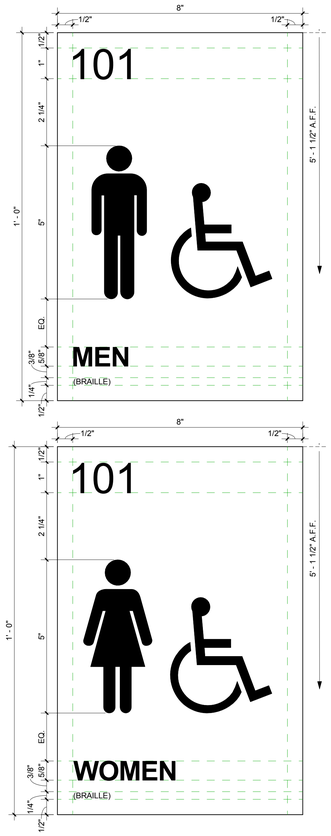

4 TYPE - 4 MEN WOMEN
6" = 1'-0"

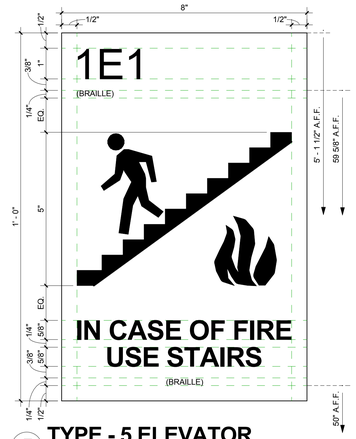

5 TYPE - 5 ELEVATOR
6" = 1'-0"

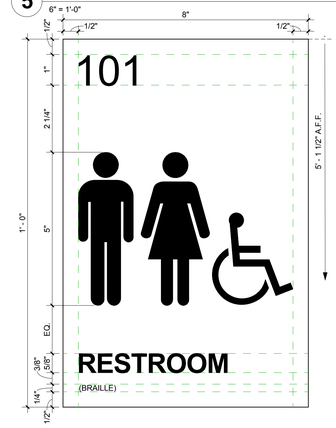

6 TYPE - 6 RESTROOM
6" = 1'-0"

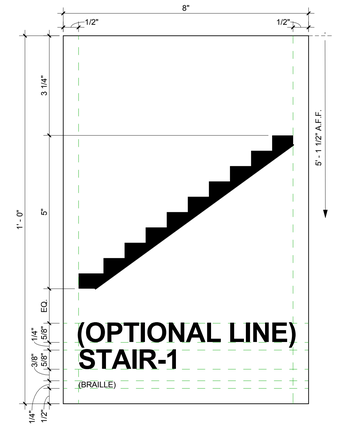

7 TYPE - 7 STAIR
6" = 1'-0"

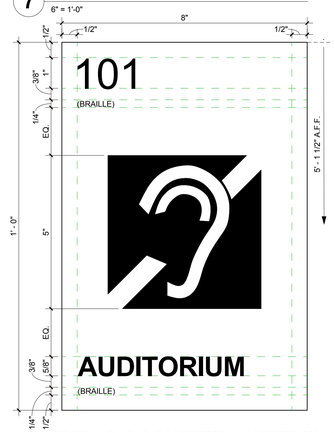

8 TYPE - 8 ASSISTED LISTENING SYSTEM
6" = 1'-0"

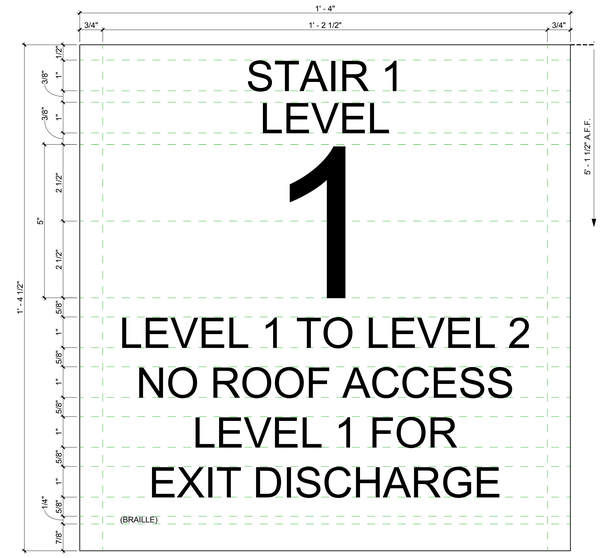

12A - LEVEL 1 ONLY

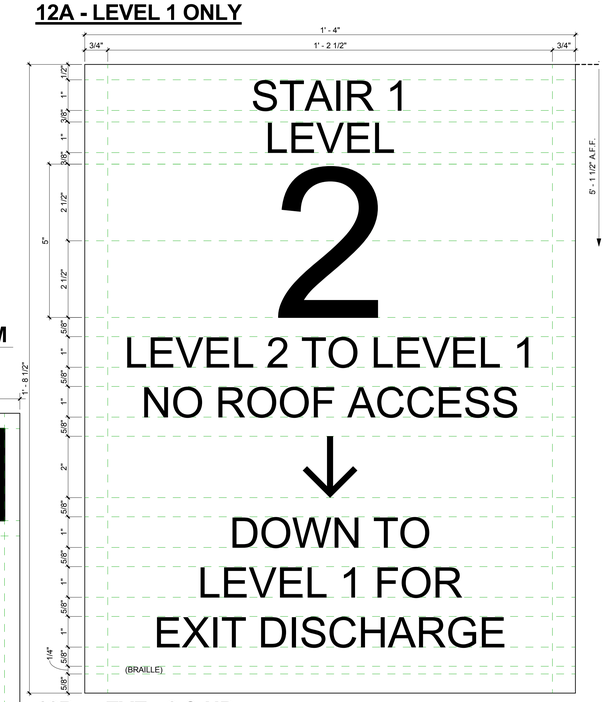

12B - LEVEL 2 & UP

12 TYPE - 12 STAIRS
6" = 1'-0"

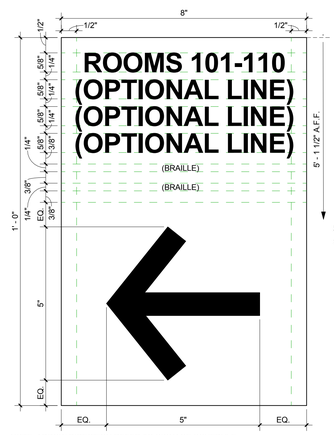

NOTE: ARROW DIRECTION REFER TO SIGNAGE SCHEDULE

9 TYPE - 9 - NOT USED
6" = 1'-0"

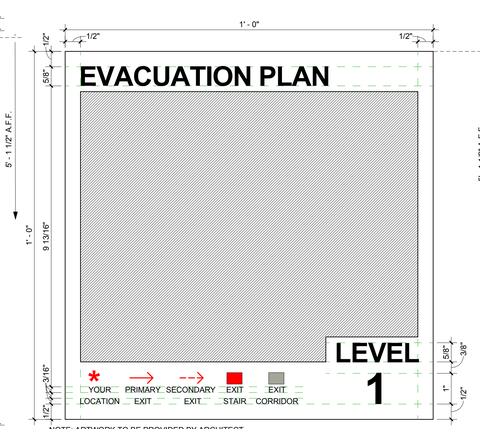

NOTE: ARTWORK TO BE PROVIDED BY ARCHITECT.
PROVIDE 1 SIGN AT EACH LEVEL AT EACH ELEVATOR.

10 TYPE - 10 EVACUATION PLAN
6" = 1'-0"

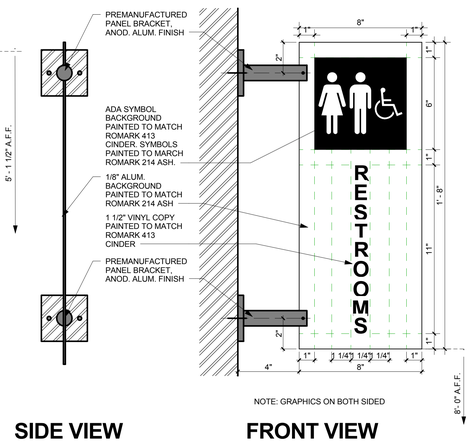

NOTE: GRAPHICS ON BOTH SIDED

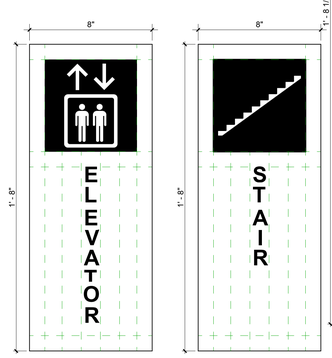

11 TYPE - 11 DOUBLE SIDED BLADE
3" = 1'-0"

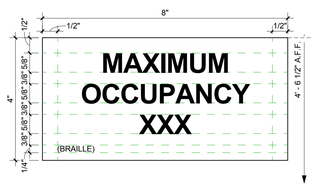

NOTES:
1. TYPE 13 SIGNS TO BE MOUNTED BELOW SCHEDULED SIGNS

13 TYPE 13 - MAXIMUM OCCUPANT
6" = 1'-0"

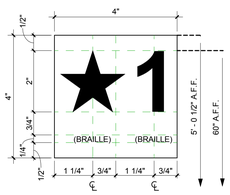

NOTE: PROVIDE AT BOTH JAMBS OF ALL ELEVATOR DOORS AT MAIN ENTRY LEVEL

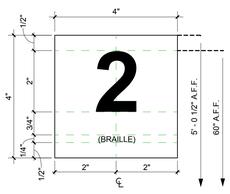

NOTE: PROVIDE AT BOTH JAMBS OF ALL ELEVATOR DOORS AT ALL NOT MAIN ENTRY LEVELS

14 TYPE - 14 ELEVATOR JAMB
6" = 1'-0"

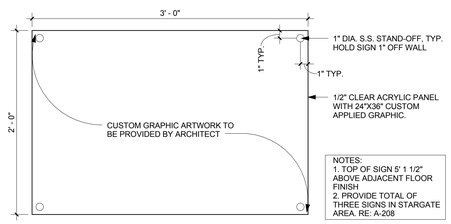

15 TYPE - 15 INFORMATION GRAPHIC
1 1/2" = 1'-0"

SIGN LOCATION @ DOOR

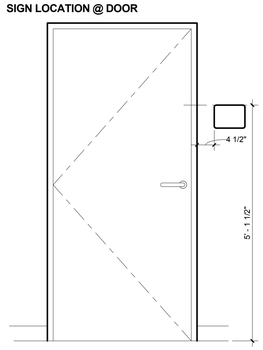

MOUNTING LOCATION REQUIRED AT SIDE OF DOOR

SIGN LOCATION @ ELEVATOR

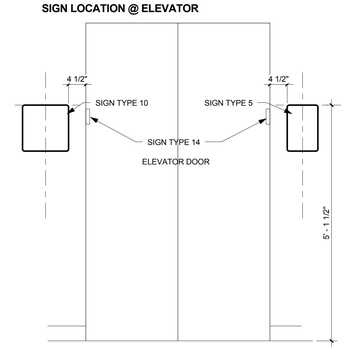

MOUNTING LOCATION REQUIRED AT SIDE OF DOOR

16 TYP. SIGN LOCATION
3/4" = 1'-0"

SIGNAGE GENERAL NOTES

1. ALL CLASSROOM AND OFFICE DOORS TO RECEIVE TYPE-3 SIGNAGE. TYPICAL.
2. ALL NON-CLASSROOM AND OFFICE DOORS TO RECEIVE TYPE-2 SIGNAGE, TYPICAL.
3. ALL ELEVATOR DOORS AT ALL LEVELS TO RECEIVE TYPE-6 SIGNAGE AS SHOWN ON DETAIL 12/A-411.
4. MOUNTING OF SIGNAGE TO BE PER 12/A-411.
5. ALL ELEVATOR LOBBIES TO RECEIVE TYPE-10 SIGNAGE.
6. ENSURE ALL SIGNAGE COMPLIES WITH CURRENT TAS ACCESSIBILITY STANDARDS.
7. ALL TEXT SHALL BE HELVETICA MEDIUM BOLD.
8. ALL NUMBERS AND TEXT SYMBOLS ARE RAISED ADA TEXT.
9. PROVIDE GRADE 2 BRAILLE WHERE INDICATED.
10. WHERE THERE IS LIMITED OR NO WALL SPACE ADJACENT DOOR, SIGN SHALL BE INSTALLED ON THE WALL ADJACENT TO THE DOOR. COORDINATE WITH ARCHITECT.
11. SIDELIGHT SIGNS TO HAVE BLACK SIGN ON BACK SIDE OF GLASS.
12. SIGN BACKGROUND COLOR SHALL BE 2X1-214 ASH AND SIGN TEXT/ LINE COLOR SHALL BE 3X1-413 CINDER.
13. FIRE EXTINGUISHER CABINETS TO BE IDENTIFIED WITH RED VERTICAL LETTERS ON FACE OF CABINET DOOR READING "FIRE EXTINGUISHER" IN 2" HIGH CHARACTERS.

muñoz & company
1017 NORTH MAIN SUITE 300
SAN ANTONIO, TEXAS 78212
O. 210.349.1163 F. 210.525.1038
W W W . M U N O Z - C O . C O M

REGISTERED ARCHITECT GEOF EDWARDS 18803 STATE OF TEXAS
11.08.18

UTRGV
The University of Texas Rio Grande Valley

UNIVERSITY OF TEXAS RIO GRANDE VALLEY
SCHOOL OF MEDICINE
TEAM BASED LEARNING CENTER
PROJECT NO: 903-1159
EDINBURG, TX
100% CONSTRUCTION DOCUMENTS

Issue/Revision

#	DESCRIPTION	DATE

Sheet Title
SIGNAGE DETAILS

Date
NOVEMBER 08, 2018

Project Number	Drawn By	Checked By
A17021.00	RL	CC

Sheet Number
A-410

SIGNAGE ROOM SCHEDULE - LEVEL 1

SIGN NUMBER	SIGN TYPE	NUMBER TEXT	LABEL TEXT	COMMENTS
1.100A	11	1.100A	RESTROOMS	
1.100G	3	1.100G	MECHANICAL ROOM	
1.100H	3	1.100H	ELECTRICAL ROOM	
1.101	3	1.101	COFFEE/JUICE BAR	
1.101A	1	1.101A	STORAGE	
1.102	3	1.102	CLASSROOM	
1.102	3	1.102	CLASSROOM	
1.103	3	1.103	PEER BASED LEARNING	
1.104	3	1.104	STUDY CARRELS	
1.105	3	1.105	PEER BASED LEARNING	
1.106	3	1.106	PEER BASED LEARNING	
1.107	3	1.107	PEER BASED LEARNING	
1.108	3	1.108	PEER BASED LEARNING	
1.109	3	1.109	PEER BASED LEARNING	
1.110	6	1.110	UNISEX RESTROOM	
1.112	3	1.112	SECURITY	
1.112A	3	1.112A	STORAGE	
1.113	3	1.113	PEER BASED LEARNING	
1.114	3	1.114	PEER BASED LEARNING	
1.115	3	1.115	---	
1.116	2	1.116	WOMEN	
1.117	2	1.117	MEN	
1.118	1	1.118	ELEVATOR EQUIPMENT	
1.119	1	1.119	JANITOR'S CLOSET	
1.120	1	1.120	STORAGE	
1.122	3	1.122	COFERENCE/STUDY	
1.123	3	1.123	---	
1.123A	3	1.123A	STORAGE	
1.124	3	1.124	---	
1.125	3	1.125	---	
1.126	3	1.126	---	
1.127	3	1.127	---	
1.128	3	1.128	---	
1.129	3	1.129	---	
1.130	3	1.130	---	
1.131	3	1.131	---	
1E1	5	1E1	IN CASE OF FIRE USE STAIRS	PROVIDE (2) SIGNS TYPE 14: NUMBER (1) ON ELEVATOR DOOR JAMBS
1E2	10	1E2	EVACUATION PLAN; LEVEL 1; LEGEND	SEE ARCH. FOR GRAPHIC
1E3	11	1E3	STAIR	
1S1	7	1S1	STAIR	
1S1A	12A	1S1A	STAIR 1; LEVEL 1	
1S1B	11	1S1B	STAIR	
1S1C	7	1S1C	STAIR	
1S2	7	1S2	STAIR	
1S2B	11	1S2B	STAIR	
1S2C	7	1S2C	STAIR	

Grand total: 46

SIGNAGE ROOM SCHEDULE - LEVEL 2

SIGN NUMBER	SIGN TYPE	NUMBER TEXT	LABEL TEXT	COMMENTS
2.100A	3	2.100A	---	
2.100F	3	2.100F	---	
2.100G	11	2.100G	RESTROOMS	
2.100M	3	2.100M	MECHANICAL ROOM	
2.101	3	2.101	---	
2.102	3	2.102	---	
2.103	3	2.103	---	
2.104	3	2.104	---	
2.105	3	2.105	---	
2.106	3	2.106	---	
2.106A	3	2.106A	ELECTRICAL ROOM	
2.107	3	2.107	---	
2.108	3	2.108	---	
2.109	3	2.109	---	
2.110	3	2.110	---	
2.111	3	2.111	---	
2.112	3	2.112	---	
2.113	3	2.113	---	
2.114	3	1.516	---	
2.115	3	2.115	---	
2.116	3	2.116	---	
2.117	3	2.117	---	
2.118	3	2.118	---	
2.119	3	2.119	---	
2.120	3	2.120	---	
2.121	3	2.121	---	
2.122	3	2.122	---	
2.122A	3	2.122A	STORAGE	
2.123	3	2.123	---	
2.124	3	2.124	CONFERENCE/STUDY	
2.124	3	2.124	CONFERENCE/STUDY	
2.126	3	2.126	STUDY	
2.127	3	2.127	---	
2.128	3	2.128	DATA/I.T.	
2.129	3	2.129	COPY/ WORK ROOM	
2.130	3	2.130	---	
2.131	3	2.131	NURSING MOTHER'S SUITE	
2.131A	2	2.131A	WOMEN	
2.131B	2	2.131B	MEN	
2.132	3	2.132	---	
2.133	6	2.133	UNISEX RESTROOM	
2.134	1	2.134	JANITOR'S CLOSET	
2.135	1	2.135	ROOF ACCESS	
2.136	3	2.136	---	
2.137	3	2.137	---	
2.138	3	2.138	---	
2.139	3	2.139	---	
2.140	3	2.140	---	
2.141	3	2.141	---	
2.142	3	2.142	---	
2.143	3	2.143	---	
2.144	3	2.144	---	
2.145	3	2.145	---	
2.146	3	2.146	---	
2.147	3	2.147	---	
2.148	3	2.148	---	
2.149	3	2.149	---	
2E1	5	2E1	IN CASE OF FIRE USE STAIRS	PROVIDE (2) SIGNS TYPE 14: NUMBER (1) ON ELEVATOR DOOR JAMBS
2E1A	10	2E1A	EVACUATION PLAN; LEVEL 1; LEGEND	SEE ARCH. FOR GRAPHIC
2E1B	11	2E1B	STAIR	
2S1	7	2S1	STAIR	
2S1A	12A	2S1A	STAIR 1; LEVEL 1	
2S1B	11	2S1B	STAIR	
2S2	7	2S2	STAIR	
2S2A	11	2S2A	STAIR	
2S2B	12A	2S2B	STAIR 1; LEVEL 1	

Grand total: 66

muñoz & company
1017 NORTH MAIN SUITE 300
SAN ANTONIO, TEXAS 78212
O. 210.349.1163 F. 210.525.1038
WWW.MUNOZ-CO.COM

REGISTERED ARCHITECT
ROGER EDWARDS
18809
STATE OF TEXAS

11.08.18

UTRGV
The University of Texas Rio Grande Valley

UNIVERSITY OF TEXAS RIO GRANDE VALLEY
SCHOOL OF MEDICINE
TEAM BASED LEARNING CENTER
PROJECT NO: 903-1159
EDINBURG, TX
100% CONSTRUCTION DOCUMENTS

Issue/Revision

#	DESCRIPTION	DATE

Sheet Title
SIGNAGE SCHEDULE

Date
NOVEMBER 08, 2018

Project Number	Drawn By	Checked By
A17021.00	Author	Checker

Sheet Number
A-412

1 LEVEL ONE SIGNAGE FLOOR PLAN
1/8" = 1'-0"

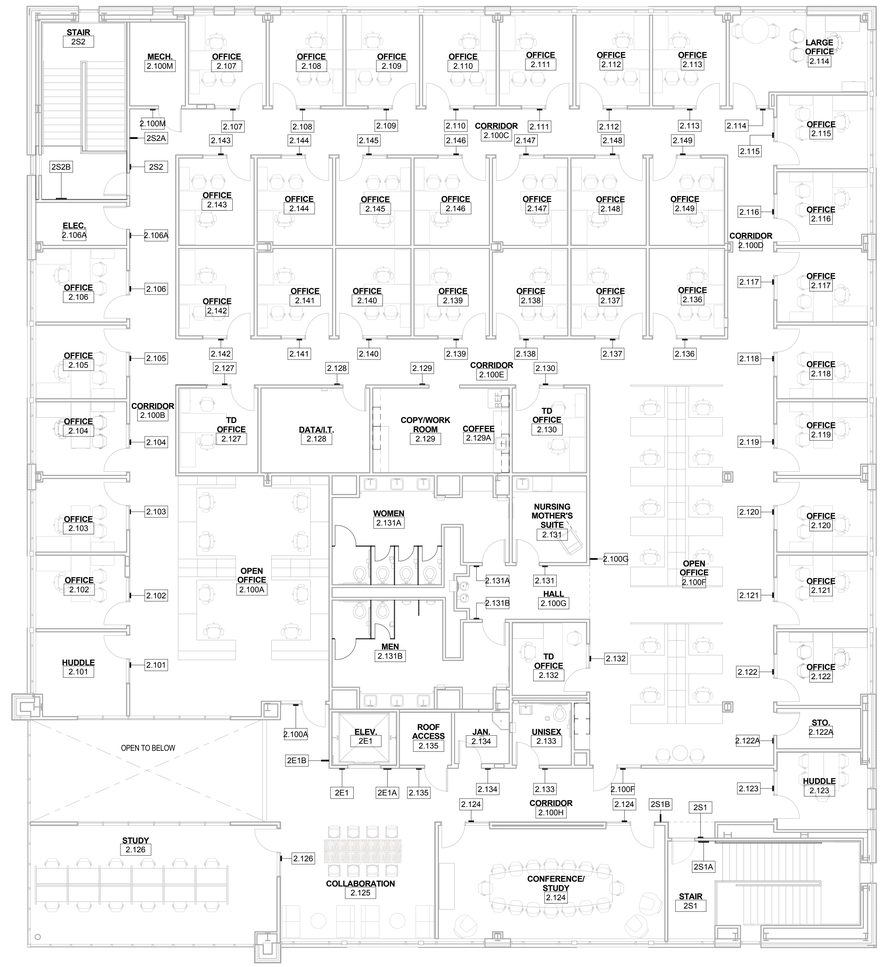

2 LEVEL TWO SIGNAGE FLOOR PLAN
1/8" = 1'-0"

muñoz & company
1017 NORTH MAIN SUITE 300
SAN ANTONIO, TEXAS 78212
O. 210.349.1163 F. 210.525.1038
WWW.MUNOZ-CO.COM

REGISTERED ARCHITECT
GEOF EDWARDS
18803
STATE OF TEXAS
11.08.18

UTRGV
The University of Texas Rio Grande Valley

UNIVERSITY OF TEXAS RIO GRANDE VALLEY
SCHOOL OF MEDICINE
TEAM BASED LEARNING CENTER
PROJECT NO: 903-1159
EDINBURG, TX
100% CONSTRUCTION DOCUMENTS

Issue/Revision

#	DESCRIPTION	DATE

Sheet Title
SIGNAGE PLANS

Date
NOVEMBER 08, 2018

Project Number	Drawn By	Checked By
A17021.00	RL	CC

Sheet Number
A-411

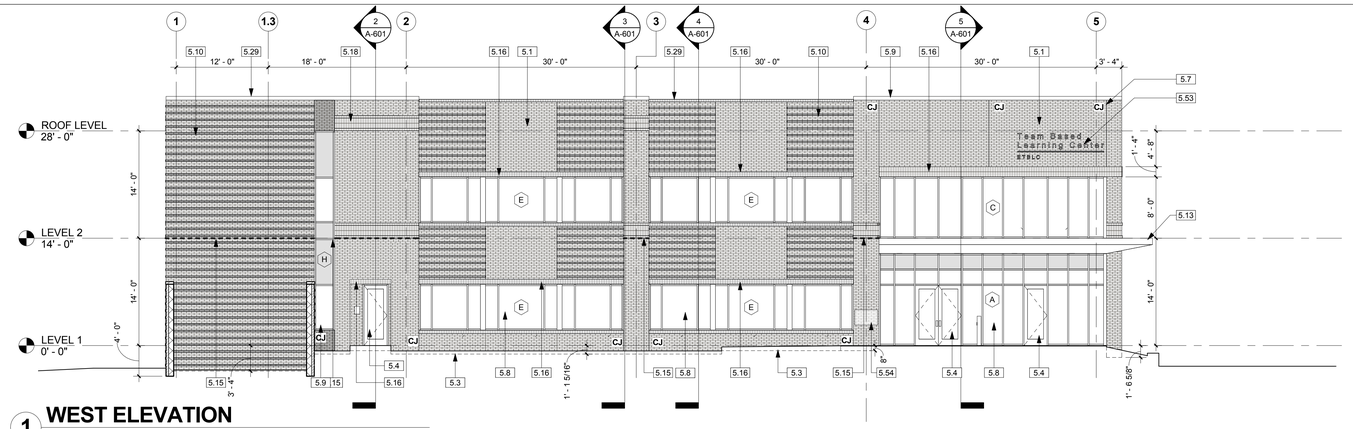

1 WEST ELEVATION
1/8" = 1'-0"

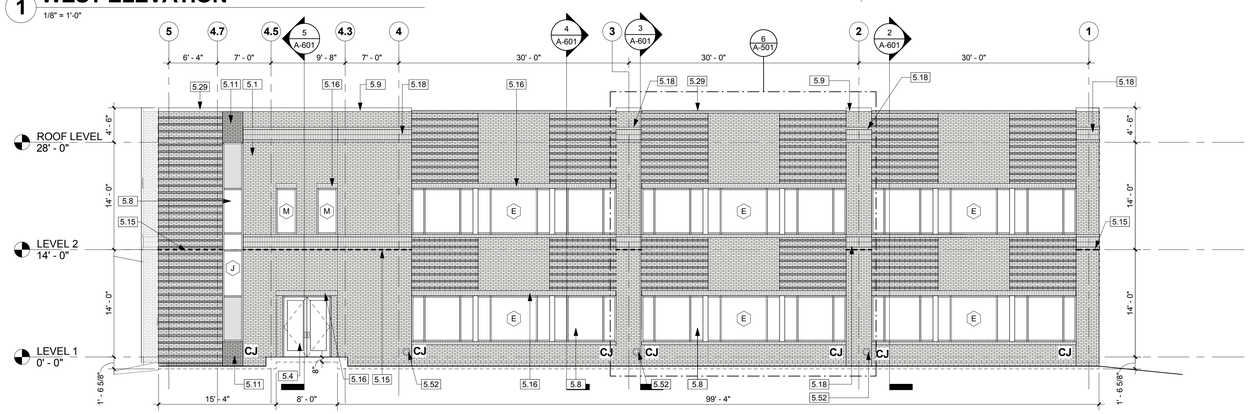

2 EAST ELEVATION
1/8" = 1'-0"

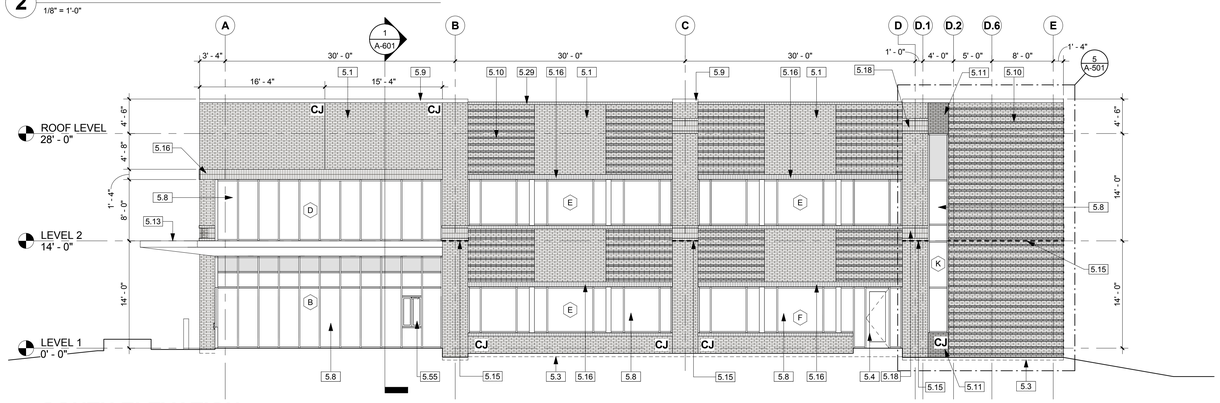

3 SOUTH ELEVATION
1/8" = 1'-0"

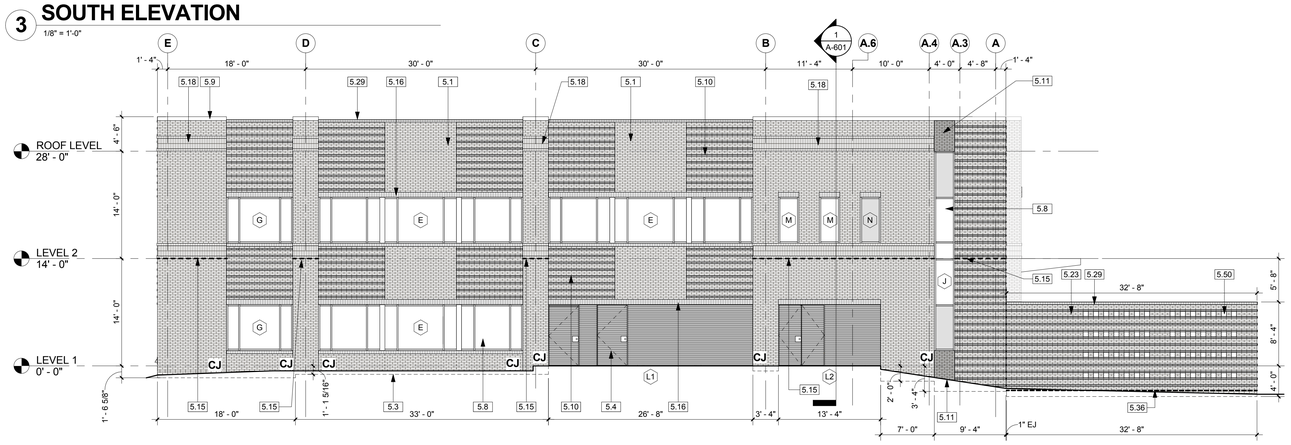

4 NORTH ELEVATION
1/8" = 1'-0"

ELEVATION GENERAL NOTES

1. ALL EXTERIOR AND/OR EXPOSED STEEL TO BE GALVANIZED.
2. ITEMS SHADED GREY INDICATED AREAS BEYOND.

KEYNOTE LEGEND	
5.1	FACE BRICK VENEER
5.3	LINE OF BRICK LUG
5.4	DOOR AS SCHEDULED
5.7	MASONRY CONTROL JOINT, TYPICAL, SEE DETAIL 3/A-604
5.8	GLAZING AS SCHEDULED.
5.9	PREFINSIHED METAL PARAPET COPING
5.10	FACE BRICK VENEER RUNNING BOND WITH 1/2" PROJECTED BRICK COURSE EVERY FOURTH COURSE
5.11	SCRATCH FACE BRICK VENEER
5.13	CANTILEVERED ALUMINUM CANOPY W/ KYNAR FINISH
5.15	STEEL RELIEF ANGLE, REF. TO STRUCTURAL
5.16	SOLDIER COURSE HEADER, SEE DETAIL
5.18	TWO ROWS OF SOLDIER COURSE BETWEEN ROWLOCK BRICK COURSES, SEE DETAIL
5.23	MASONRY SCREEN WALL AT MECHANICAL YARD, FACE BRICK VENEER WITH PROJECTED BRICK PATTERN OVER CMU BACKUP WALL
5.29	ROWLOCK BRICK COURSE PARAPET CAP
5.36	SLAB LINE AT MECHANICAL YARD BEYOND
5.50	MASONRY OPENING PATTERN IN SCREEN WALL
5.52	CAST NICKEL BRONZE DOWNSPOUT NOZZLE, WALL MOUNTED 8" O.C. ABOVE FINISHED FLOOR, REF. TO PLUMBING
5.53	WALL MOUNTED EXTERIOR BUILDING IDENTIFICATION SIGN. FINAL LOCATION AND LETTERING TO BE VERIFIED BY OWNER
5.54	CAST ALUMINUM PLAQUE, OFCI
5.55	WALK-UP TRANSACTION WINDOW WITH STAINLESS STEEL SHELF

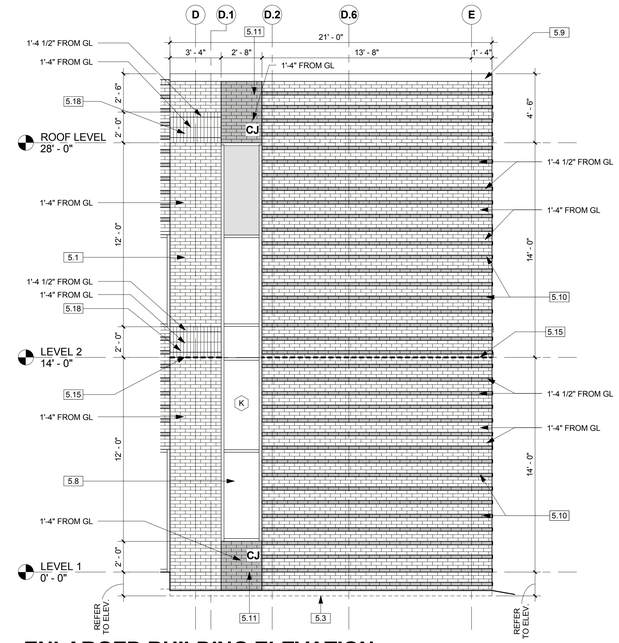

5 ENLARGED BUILDING ELEVATION
1/4" = 1'-0"

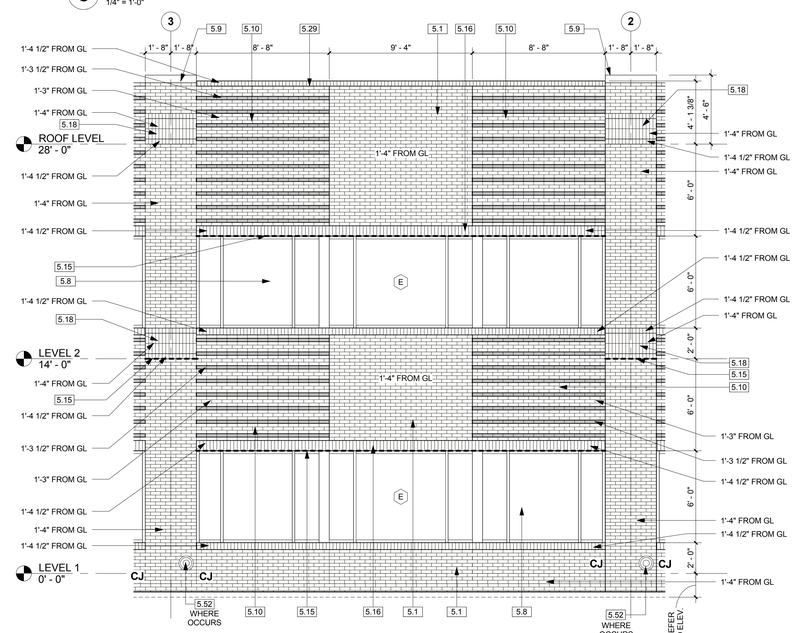

6 ENLARGED BUILDING ELEVATION
1/4" = 1'-0"

muñoz & company
1017 NORTH MAIN SUITE 300
SAN ANTONIO, TEXAS 78212
O. 210.349.1163 F. 210.525.1038
WWW.MUNOZ-CO.COM

REGISTERED ARCHITECT
JEOFF EDWARDS
18803
STATE OF TEXAS
11.08.18

UTRGV
The University of Texas Rio Grande Valley

UNIVERSITY OF TEXAS RIO GRANDE VALLEY
SCHOOL OF MEDICINE
TEAM BASED LEARNING CENTER
PROJECT NO: 903-1159
EDINBURG, TX
100% CONSTRUCTION DOCUMENTS

Issue/Revision

#	DESCRIPTION	DATE

Sheet Title
EXTERIOR ELEVATIONS

Date
NOVEMBER 08, 2018

Project Number	Drawn By	Checked By
A17021.00	RL	CC

Sheet Number
A-501

SOUTHWEST ENTRY PLAZA FROM COURTYARD

NORTHEAST VIEW FROM SCHUNIOR STREET

muñoz & company
1017 NORTH MAIN SUITE 300
SAN ANTONIO, TEXAS 78212
O. 210.349.1163 F. 210.525.1038
WWW.MUNOZ-CO.COM

REGISTERED ARCHITECT
GEOF EDWARD
18803
STATE OF TEXAS
11.08.18

UTRGV
The University of Texas
Rio Grande Valley

UNIVERSITY OF TEXAS RIO GRANDE VALLEY
SCHOOL OF MEDICINE
TEAM BASED LEARNING CENTER
PROJECT NO: 903-1159
EDINBURG, TX
100% CONSTRUCTION DOCUMENTS

Issue/Revision

#	DESCRIPTION	DATE

Sheet Title
EXTERIOR BUILDING PERSPECTIVES

Date
NOVEMBER 08, 2018

Project Number	Drawn By	Checked By
A17021.00	RL	CC

Sheet Number
A-502

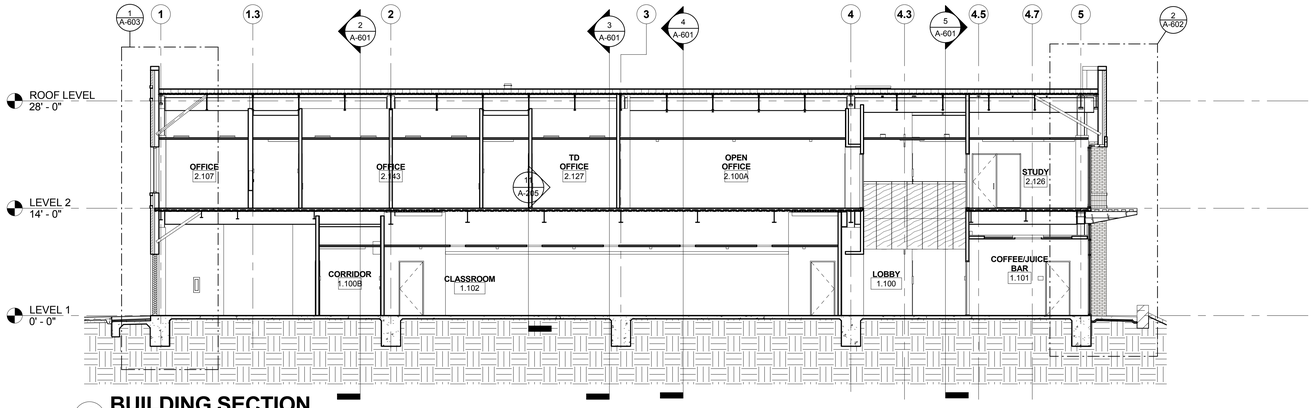

1 BUILDING SECTION
1/8" = 1'-0"

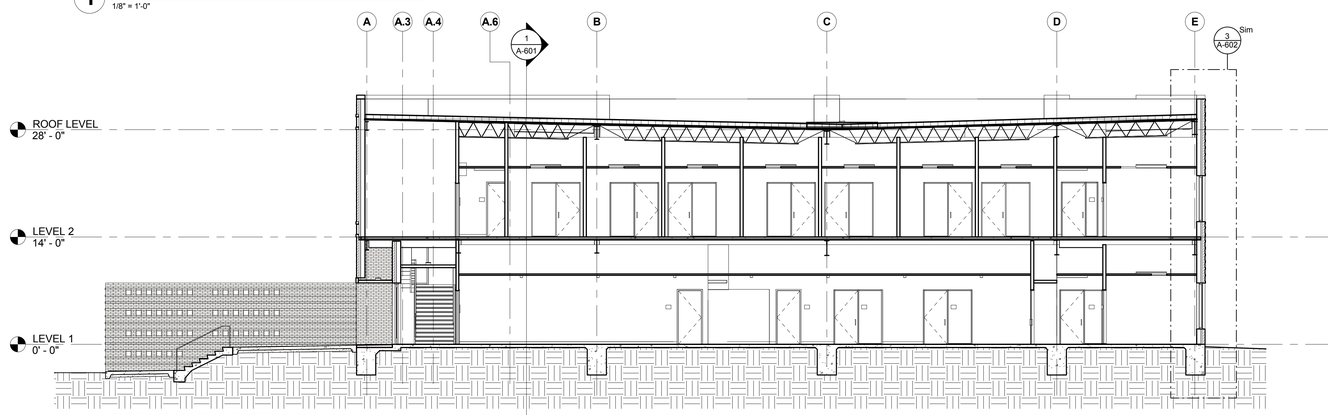

2 BUILDING SECTION
1/8" = 1'-0"

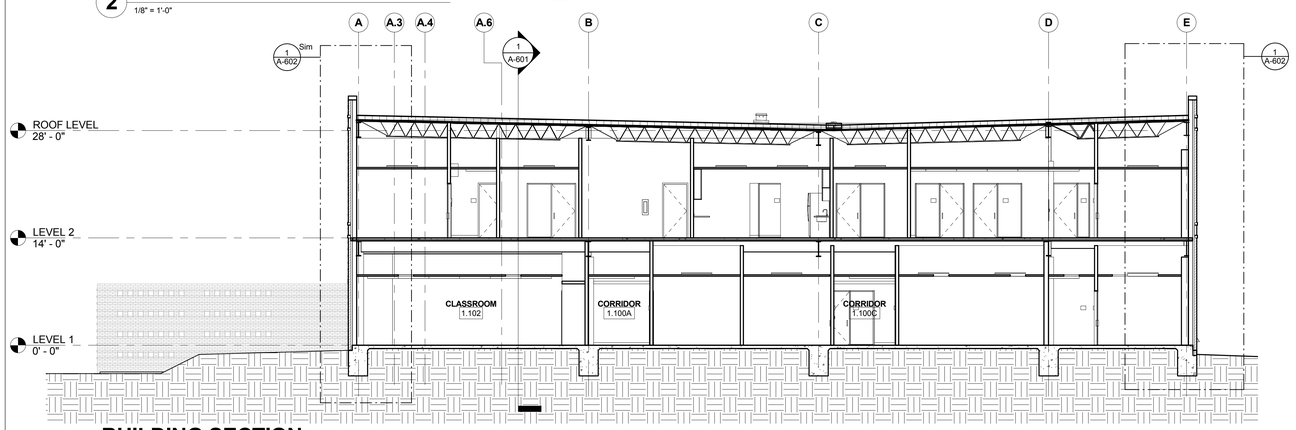

3 BUILDING SECTION
1/8" = 1'-0"

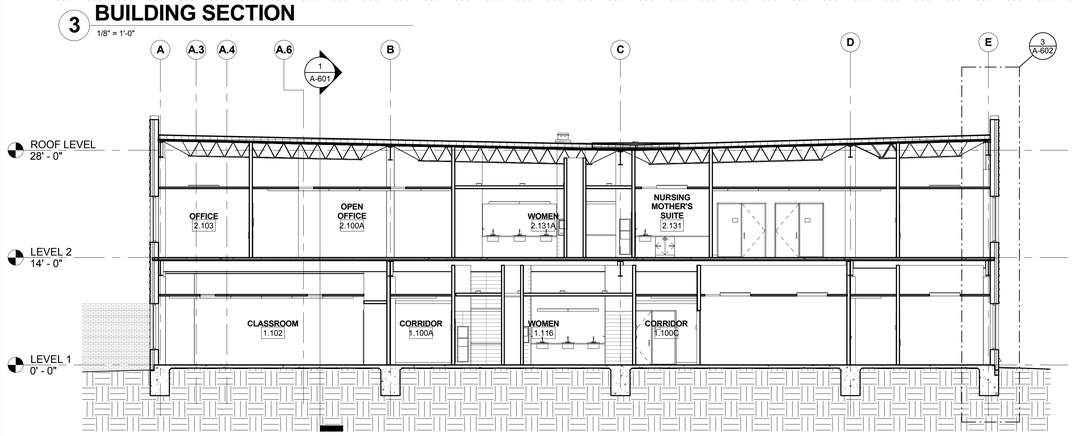

4 BUILDING SECTION
1/8" = 1'-0"

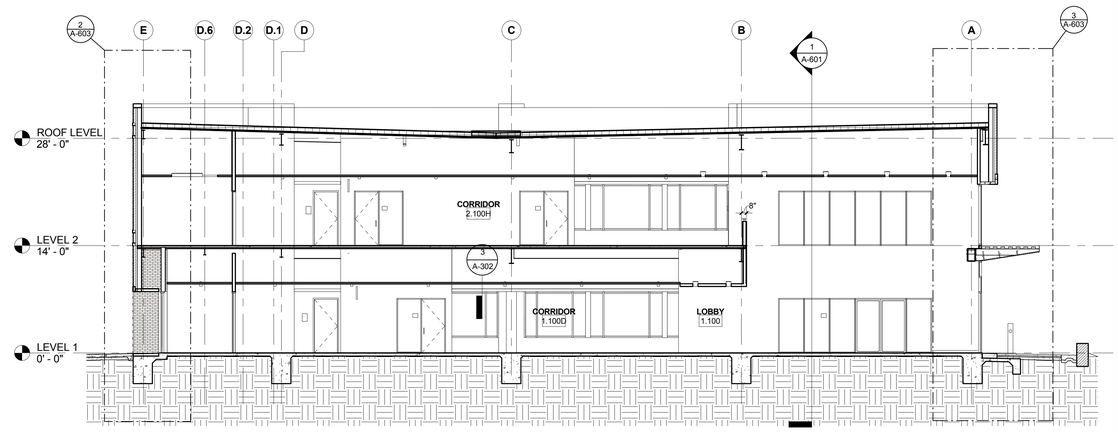

5 BUILDING SECTION
1/8" = 1'-0"

WALL SECTION GENERAL NOTES

1. ALL EXTERIOR AND/OR EXPOSED STEEL TO BE GALVANIZED.
2. REFER TO A-402 FOR WEATHERPROOFING SCHEDULE.

muñoz & company
1017 NORTH MAIN SUITE 300
SAN ANTONIO, TEXAS 78212
O. 210.349.1163 F. 210.525.1038
WWW.MUNOZ-CO.COM

REGISTERED ARCHITECT GEOF EDWARDS 18803 STATE OF TEXAS
11.08.18

UTRGV
The University of Texas Rio Grande Valley

UNIVERSITY OF TEXAS RIO GRANDE VALLEY
SCHOOL OF MEDICINE
TEAM BASED LEARNING CENTER
PROJECT NO: 903-1159
EDINBURG, TX
100% CONSTRUCTION DOCUMENTS

Issue/Revision

#	DESCRIPTION	DATE

Sheet Title
BUILDING SECTIONS

Date
NOVEMBER 08, 2018

Project Number	Drawn By	Checked By
A17021.00	RL	CC

Sheet Number
A-601

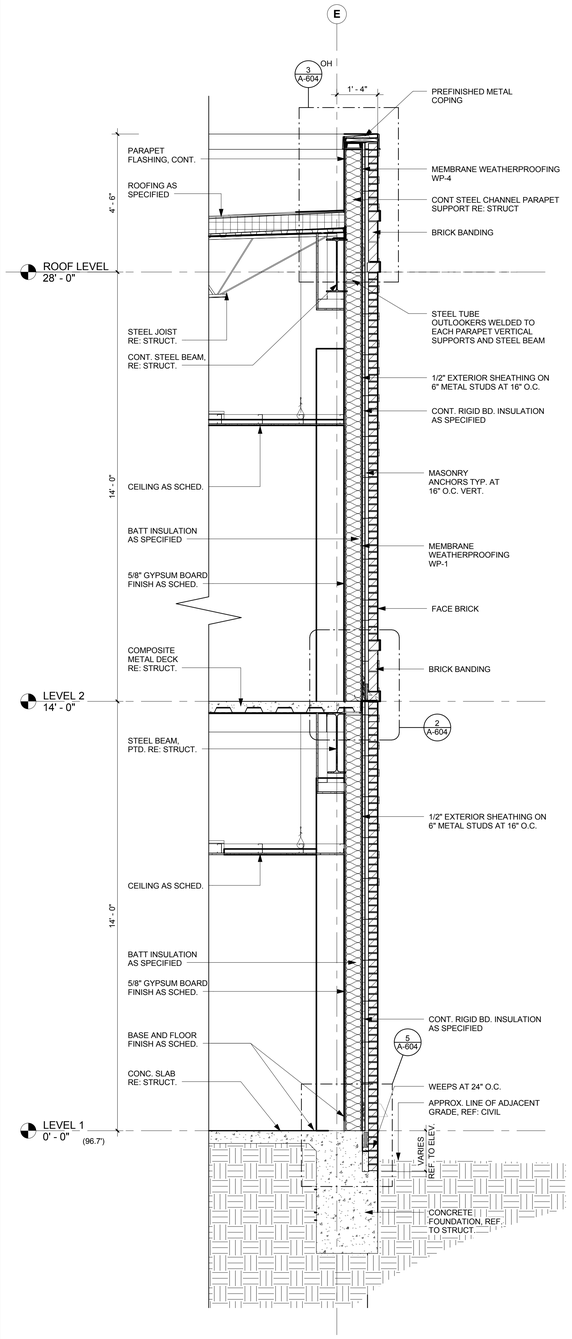

1 WALL SECTION - TYP.

1/2" = 1'-0"

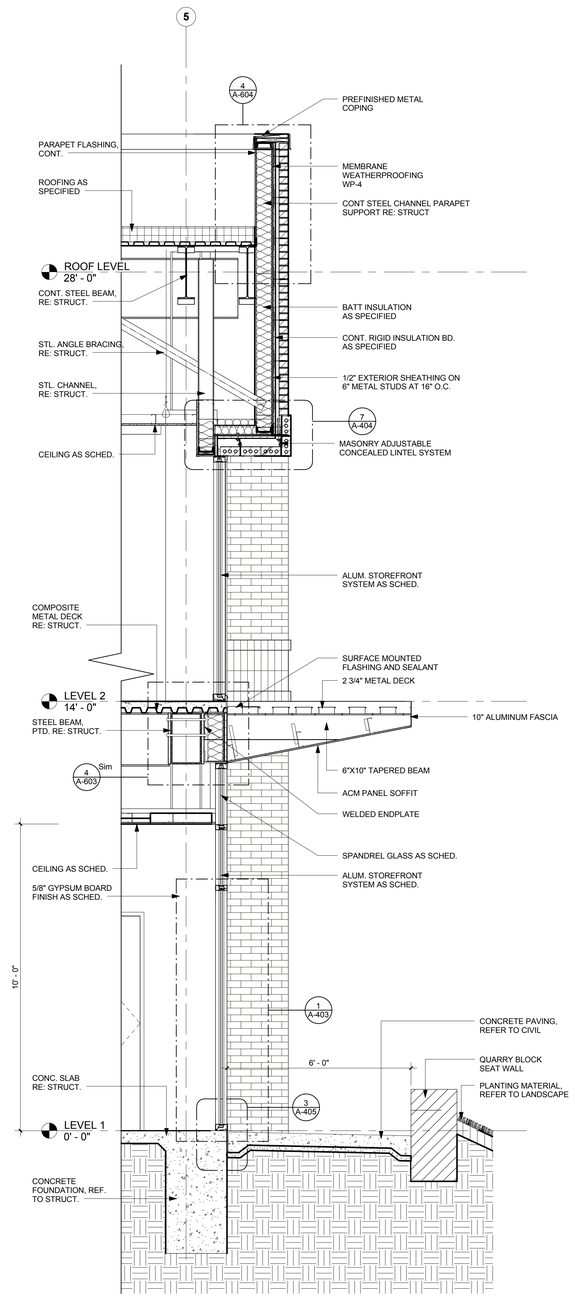

2 WALL SECTION

1/2" = 1'-0"

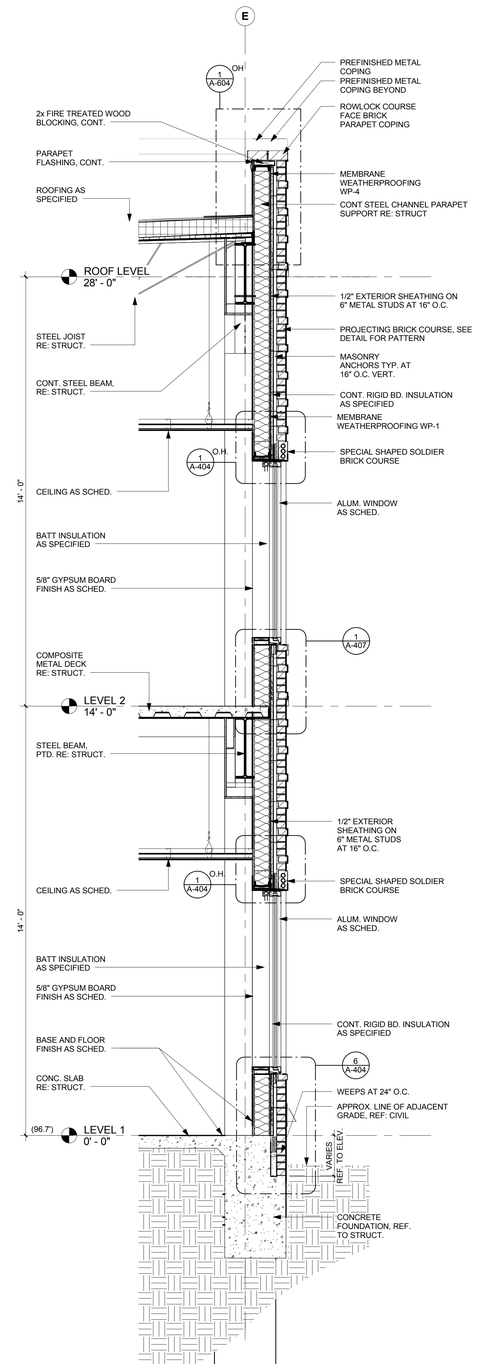

3 WALL SECTION

1/2" = 1'-0"

muñoz & company
1017 NORTH MAIN SUITE 300
SAN ANTONIO, TEXAS 78212
O. 210.349.1163 F. 210.525.1038
W W W . M U N O Z - C O . C O M

REGISTERED ARCHITECT ROF EDWARDS 18803 STATE OF TEXAS

11.08.18

UTRGV
The University of Texas Rio Grande Valley

UNIVERSITY OF TEXAS RIO GRANDE VALLEY
SCHOOL OF MEDICINE TEAM BASED LEARNING CENTER
PROJECT NO: 903-1159
EDINBURG, TX
100% CONSTRUCTION DOCUMENTS

Issue/Revision

#	DESCRIPTION	DATE

Sheet Title
WALL SECTIONS

Date
NOVEMBER 08, 2018

Project Number	Drawn By	Checked By
A17021.00	RL	CC

Sheet Number
A-602

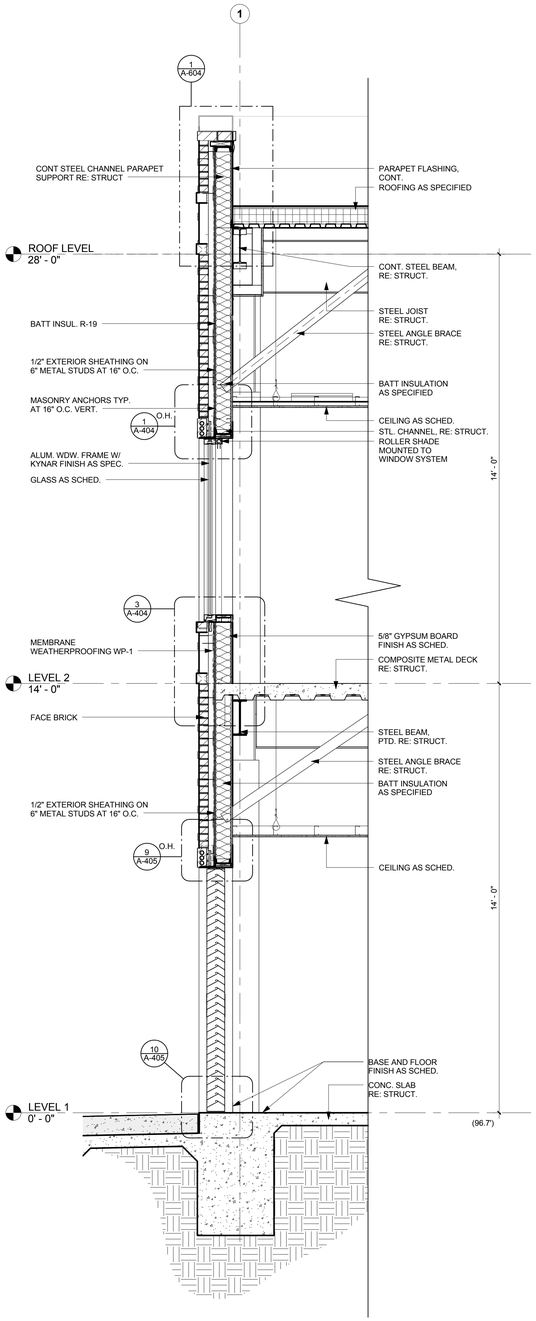

1 WALL SECTION
1/2" = 1'-0"

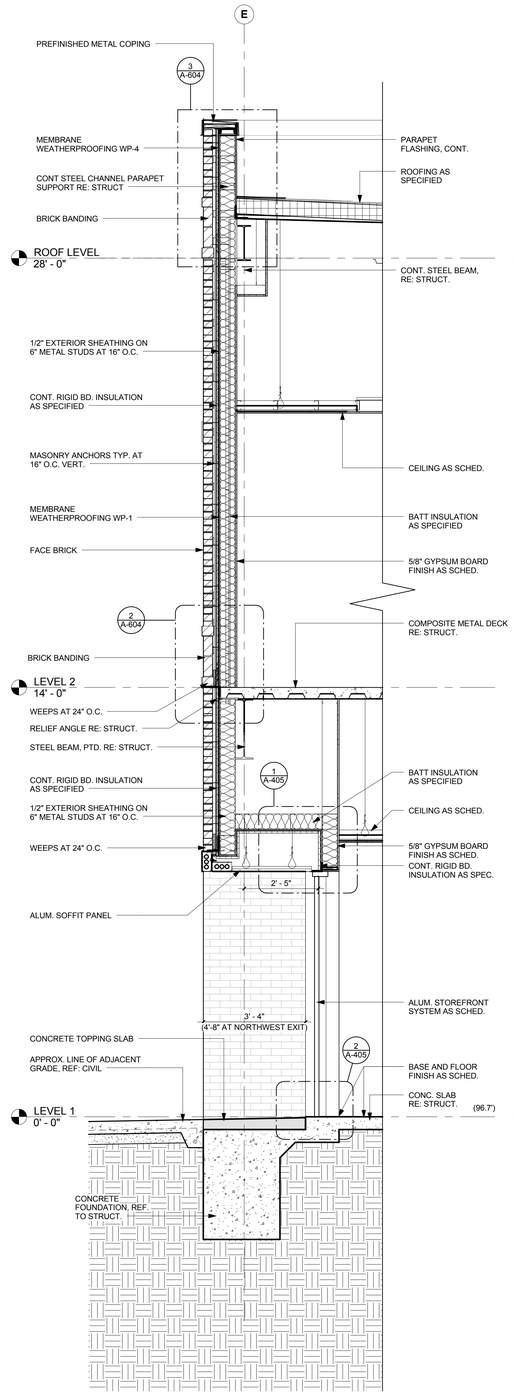

2 WALL SECTION
1/2" = 1'-0"

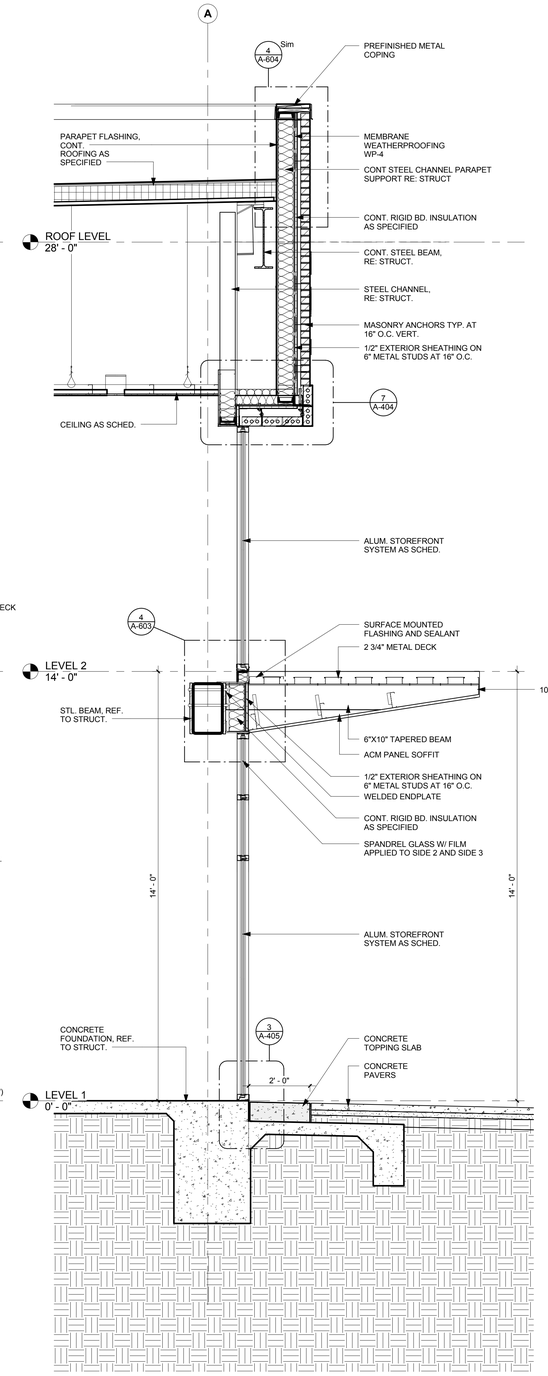

3 WALL SECTION
1/2" = 1'-0"

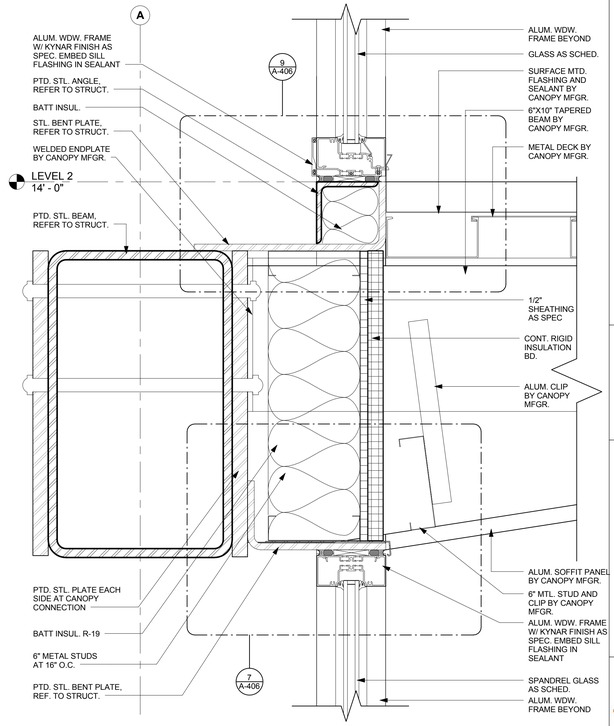

4 WALL SECTION AT CANOPY
3" = 1'-0"

muñoz & company
1017 NORTH MAIN SUITE 300
SAN ANTONIO, TEXAS 78212
O. 210.349.1163 F. 210.525.1038
W W W . M U N O Z - C O . C O M

REGISTERED ARCHITECT GREGORY EDWARDS 18809 STATE OF TEXAS

11.08.18

UTRGV The University of Texas Rio Grande Valley

UNIVERSITY OF TEXAS RIO GRANDE VALLEY
SCHOOL OF MEDICINE
TEAM BASED LEARNING CENTER
PROJECT NO: 903-1159
EDINBURG, TX
100% CONSTRUCTION DOCUMENTS

Issue/Revision

#	DESCRIPTION	DATE

Sheet Title
WALL SECTIONS

Date
NOVEMBER 08, 2018

Project Number	Drawn By	Checked By
A17021.00	RL	CC

Sheet Number
A-603

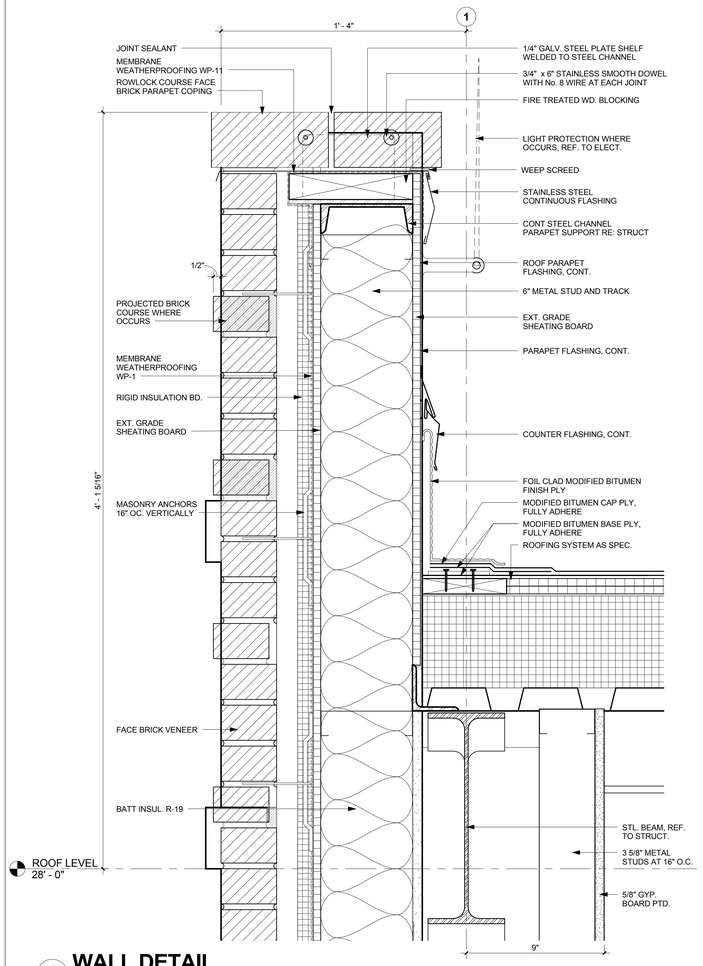

1 WALL DETAIL
3" = 1'-0"

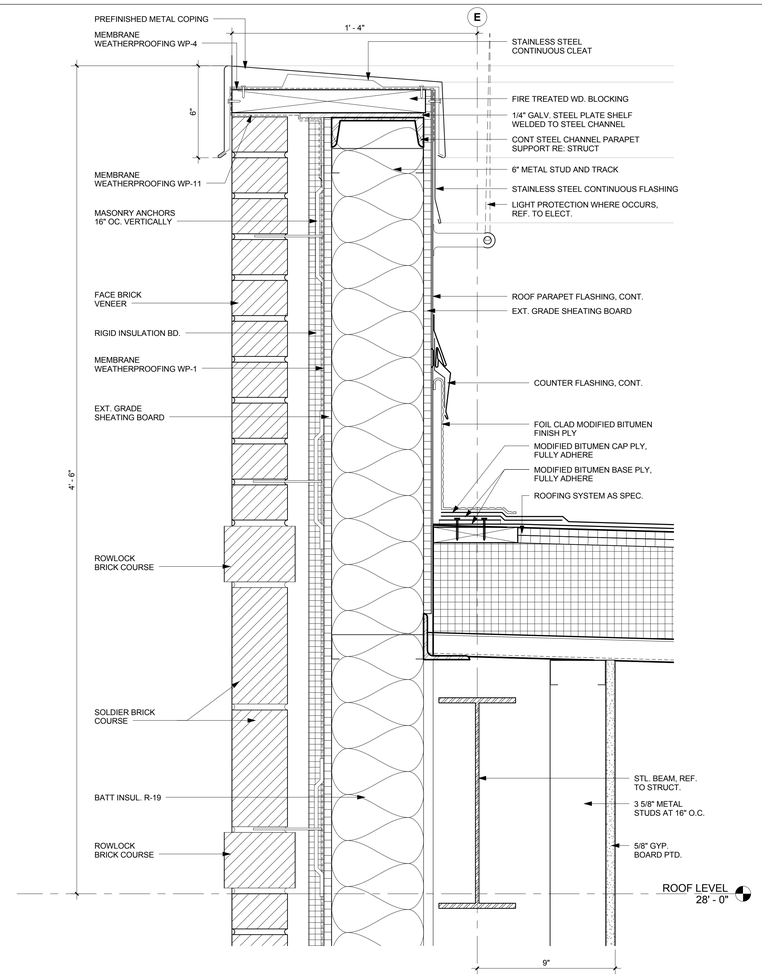

3 WALL DETAIL
3" = 1'-0"

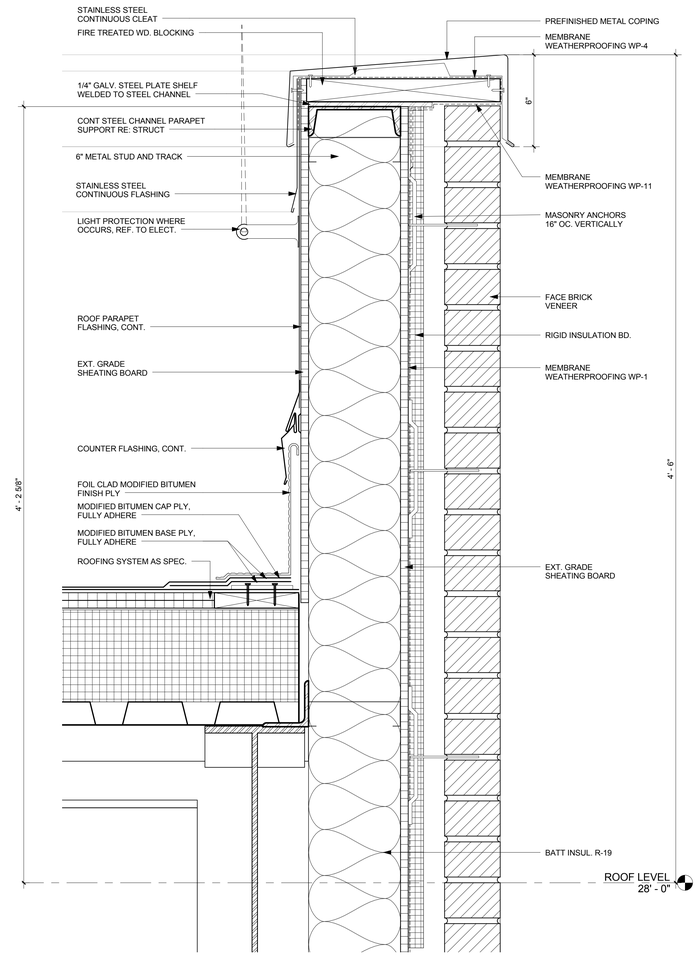

4 WALL DETAIL
3" = 1'-0"

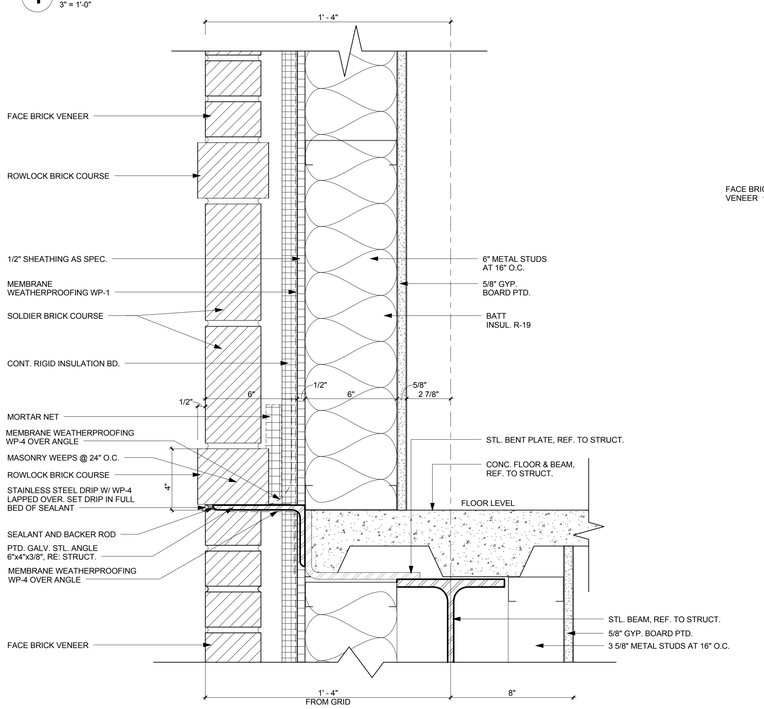

2 WALL DETAIL
3" = 1'-0"

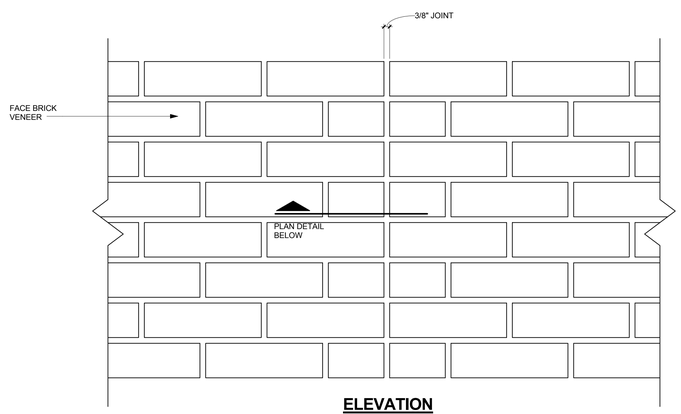

ELEVATION

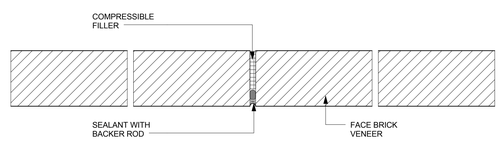

PLAN

7 BRICK CONTROL JOINT DETAIL
3" = 1'-0"

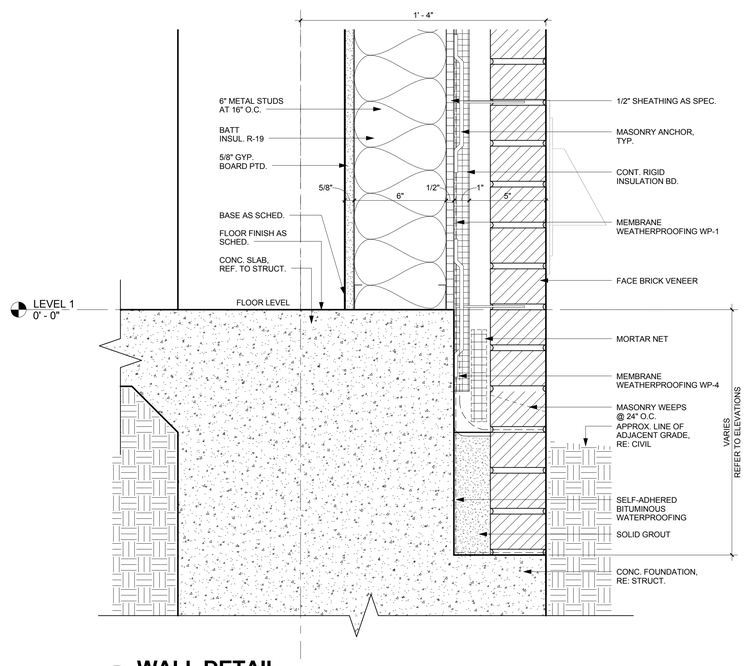

5 WALL DETAIL
3" = 1'-0"

muñoz & company
1017 NORTH MAIN SUITE 300
SAN ANTONIO, TEXAS 78212
O. 210.349.1163 F. 210.525.1038
W W W . M U N O Z - C O . C O M

REGISTERED ARCHITECT JOSEPH EDWARD GALVAN 18803 STATE OF TEXAS
11.08.18

UTRGV
The University of Texas Rio Grande Valley

UNIVERSITY OF TEXAS RIO GRANDE VALLEY
SCHOOL OF MEDICINE
TEAM BASED LEARNING CENTER
PROJECT NO: 903-1159
EDINBURG, TX
100% CONSTRUCTION DOCUMENTS

Issue/Revision

#	DESCRIPTION	DATE

Sheet Title
WALL DETAILS

Date
NOVEMBER 08, 2018

Project Number	Drawn By	Checked By
A17021.00	RL	CC

Sheet Number
A-604

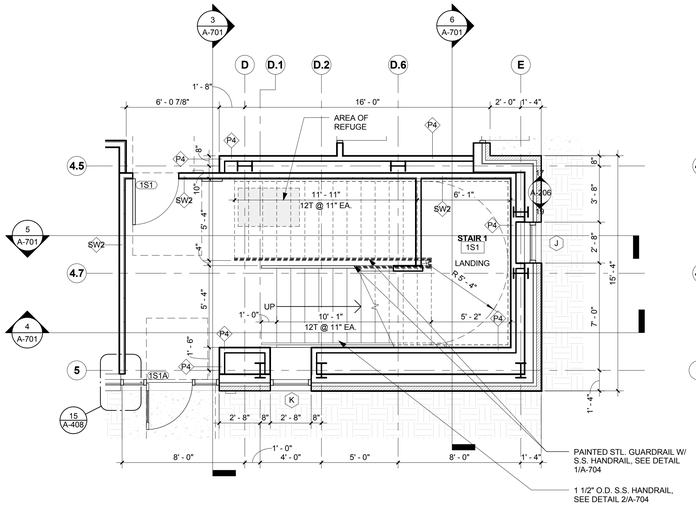

1 STAIR 1 - LEVEL ONE - BASE BID

1/4" = 1'-0"

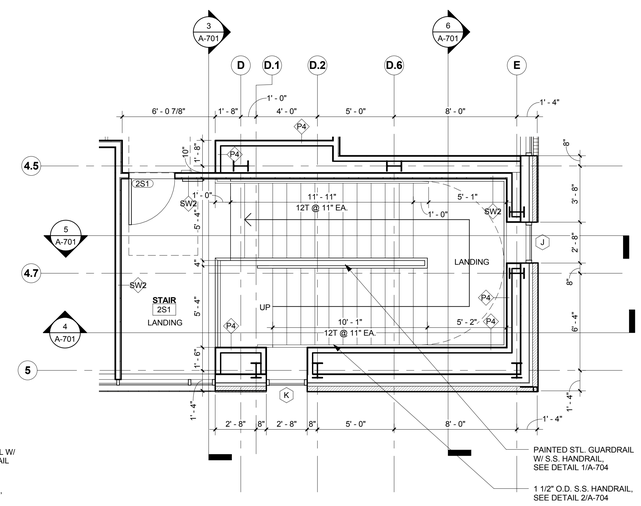

2 STAIR 1 - LEVEL TWO - BASE BID

1/4" = 1'-0"

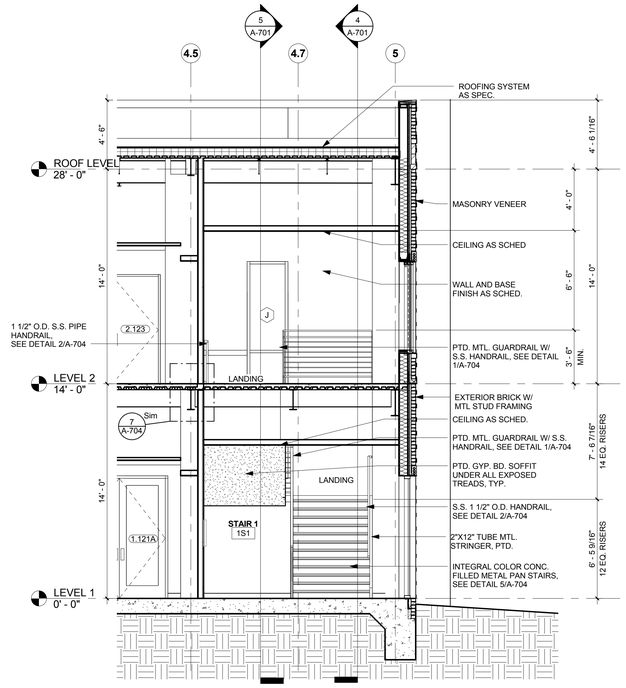

3 SECTION - STAIR 1

1/4" = 1'-0"

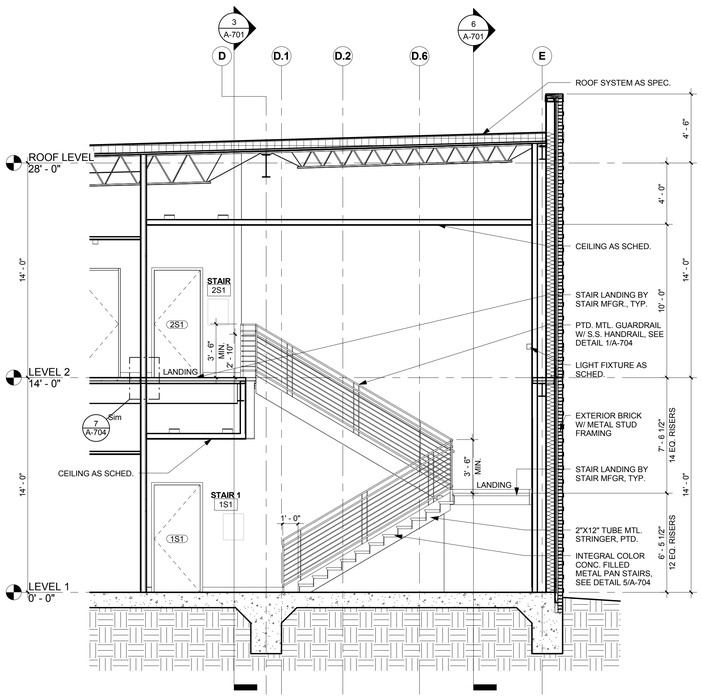

4 SECTION - STAIR 1

1/4" = 1'-0"

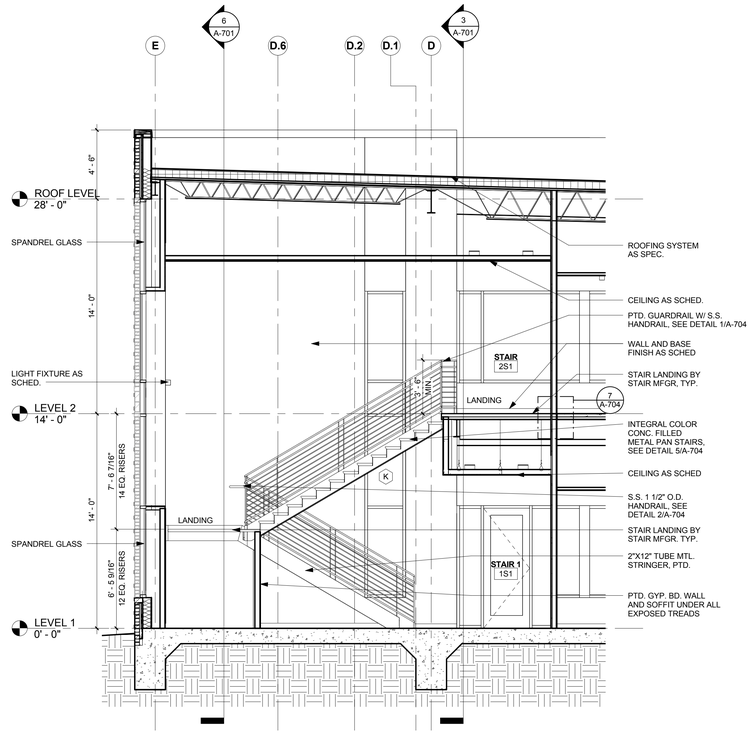

5 SECTION - STAIR 1

1/4" = 1'-0"

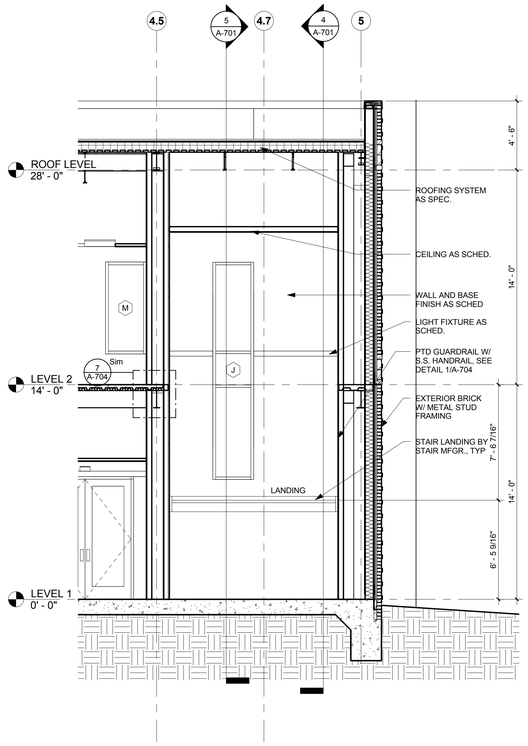

6 SECTION - STAIR 1

1/4" = 1'-0"

muñoz & company
1017 NORTH MAIN SUITE 300
SAN ANTONIO, TEXAS 78212
O. 210.349.1163 F. 210.525.1038
W W W . M U N O Z - C O . C O M

REGISTERED ARCHITECT JEFF EDWARDS 18803 STATE OF TEXAS

11.08.18

UTRGV
The University of Texas Rio Grande Valley

UNIVERSITY OF TEXAS RIO GRANDE VALLEY
SCHOOL OF MEDICINE
TEAM BASED LEARNING CENTER
PROJECT NO: 903-1159
EDINBURG, TX
100% CONSTRUCTION DOCUMENTS

Issue/Revision

#	DESCRIPTION	DATE

Sheet Title
ENLARGED STAIR PLANS AND SECTIONS - STAIR 1

Date
NOVEMBER 08, 2018

Project Number	Drawn By	Checked By
A17021.00	RL	CC

Sheet Number
A-701

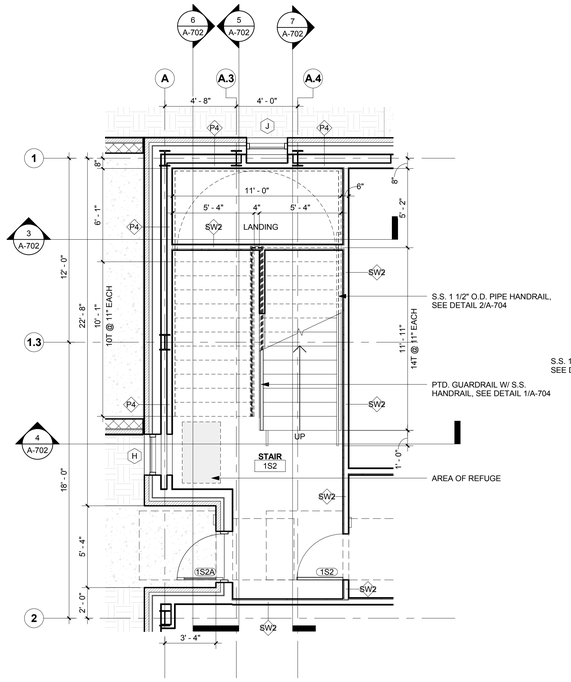

1 STAIR 2 - LEVEL ONE

1/4" = 1'-0"

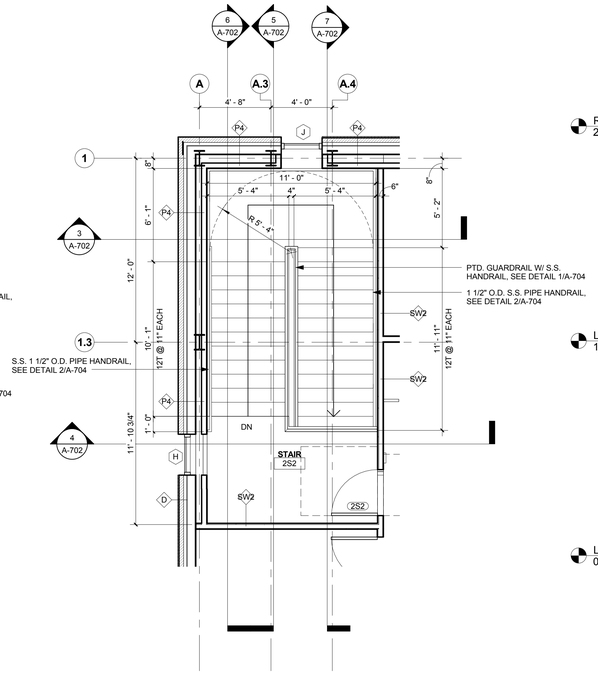

2 STAIR 2 - LEVEL TWO

1/4" = 1'-0"

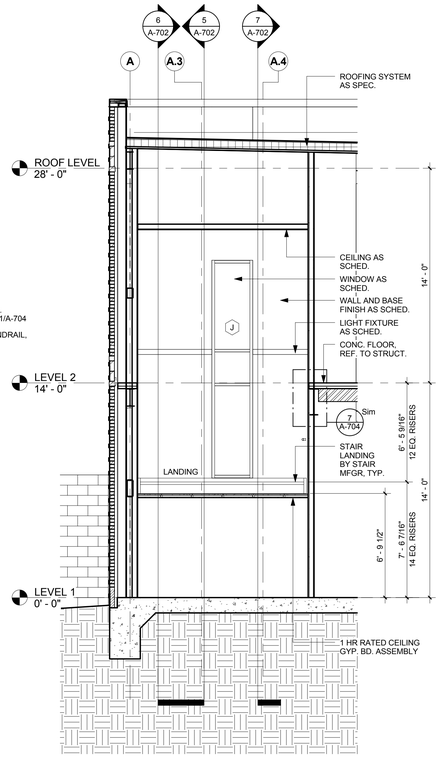

3 SECTION - STAIR 2

1/4" = 1'-0"

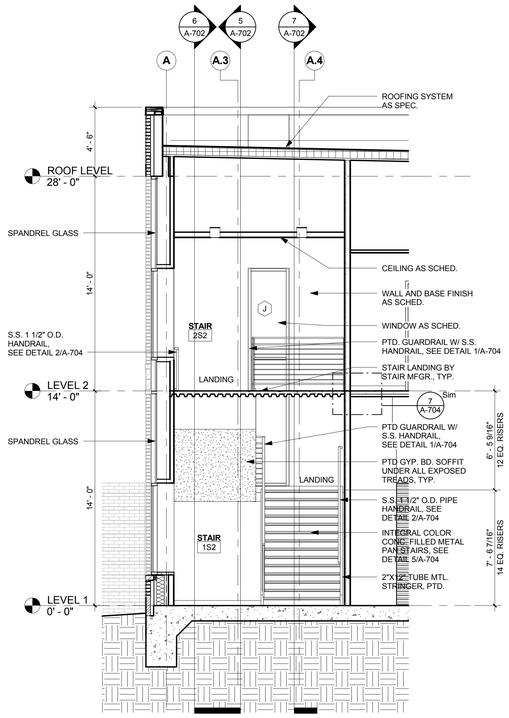

4 SECTION - STAIR 2

1/4" = 1'-0"

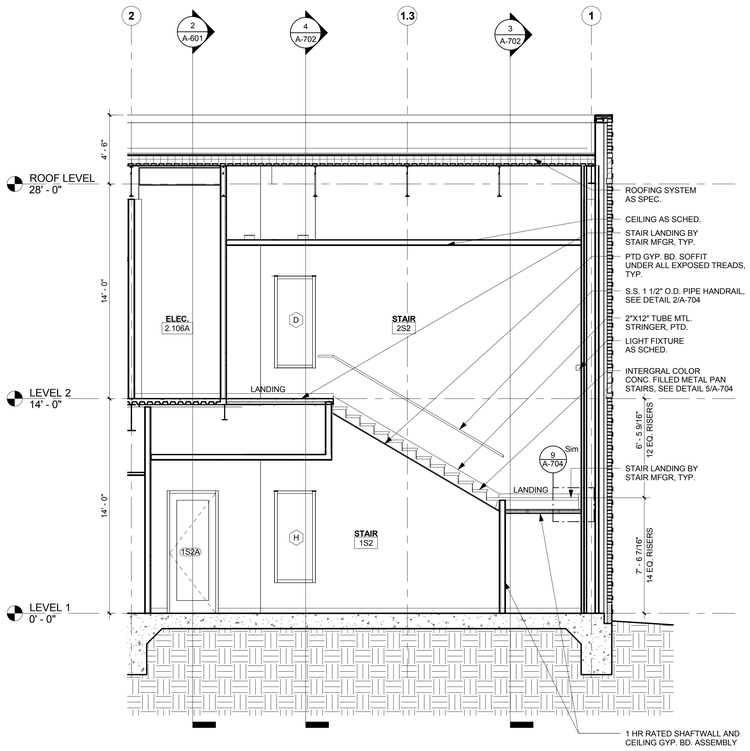

5 SECTION - STAIR 2

1/4" = 1'-0"

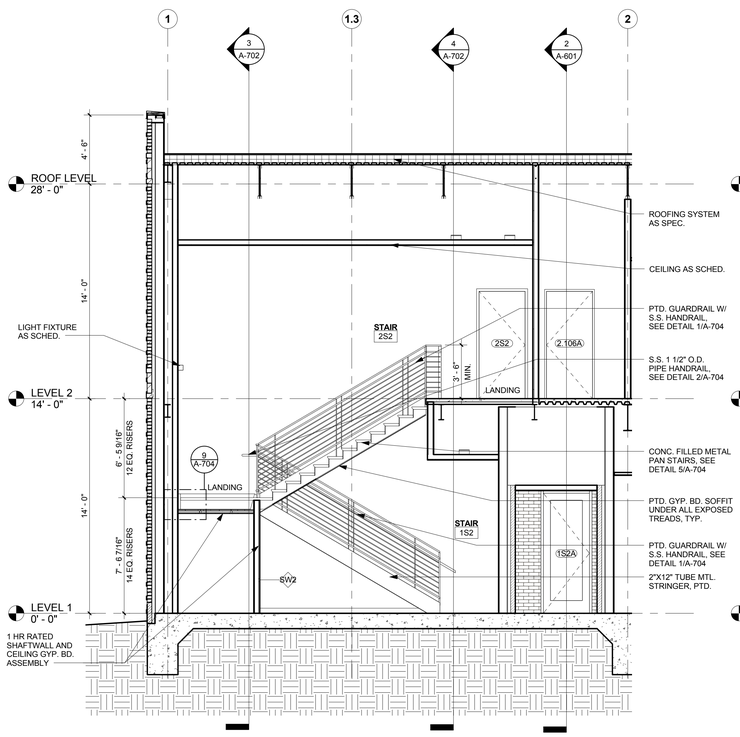

6 SECTION - STAIR 2

1/4" = 1'-0"

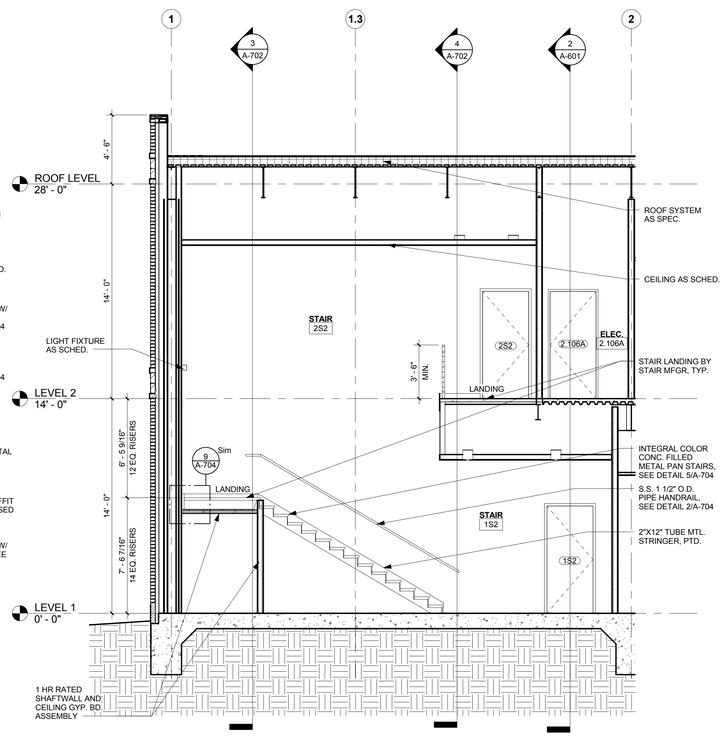

7 SECTION - STAIR 2

1/4" = 1'-0"

muñoz & company
1017 NORTH MAIN SUITE 300
SAN ANTONIO, TEXAS 78212
O. 210.349.1163 F. 210.525.1038
W W W . M U N O Z - C O . C O M

REGISTERED ARCHITECT GREGORY EDWARDS 18809 STATE OF TEXAS

11.08.18

UTRGV
The University of Texas Rio Grande Valley

UNIVERSITY OF TEXAS RIO GRANDE VALLEY
SCHOOL OF MEDICINE
TEAM BASED LEARNING CENTER

PROJECT NO: 903-1159

EDINBURG, TX

100% CONSTRUCTION DOCUMENTS

Issue/Revision

#	DESCRIPTION	DATE

Sheet Title

ENLARGED STAIR PLANS AND SECTIONS - STAIR 2

Date

NOVEMBER 08, 2018

Project Number	Drawn By	Checked By
A17021.00	RL	CC

Sheet Number

A-702

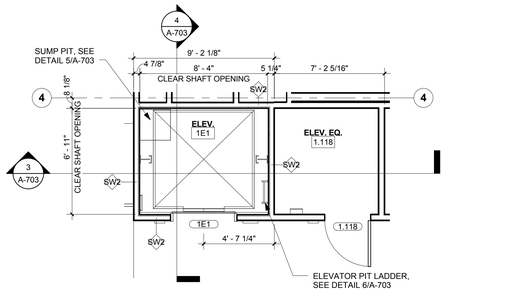

1 ELEVATOR PLAN - LEVEL ONE

1/4" = 1'-0"

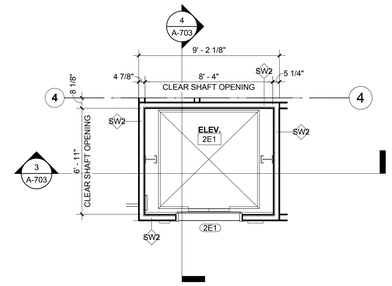

2 ELEVATOR PLAN - LEVEL TWO

1/4" = 1'-0"

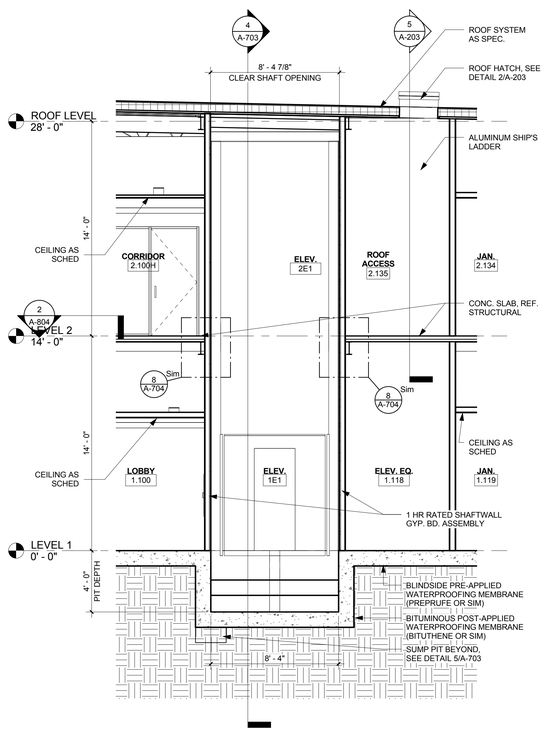

3 SECTION - ELEVATOR

1/4" = 1'-0"

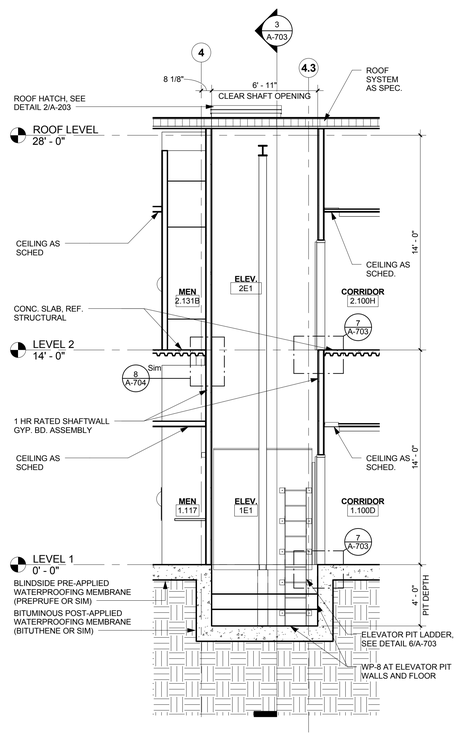

4 SECTION - ELEVATOR

1/4" = 1'-0"

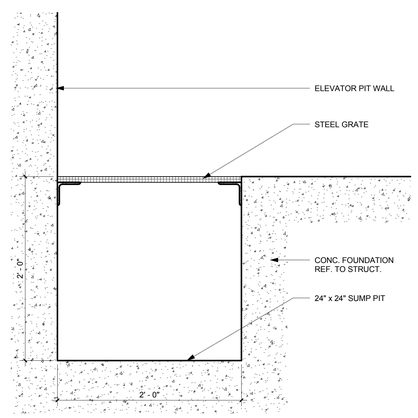

5 ELEVATOR SUMP PIT

1 1/2" = 1'-0"

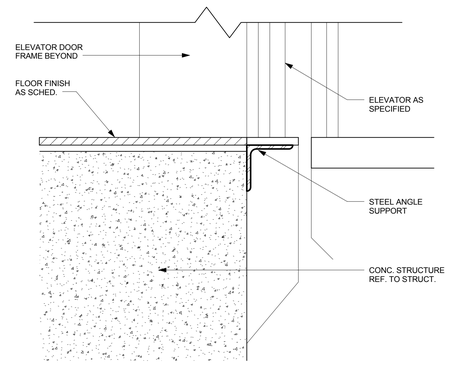

7 ELEVATOR DOOR SILL

3" = 1'-0"

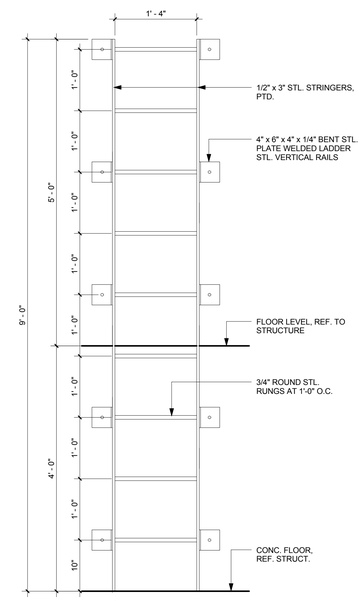

6 ELEVATOR STEEL LADDER

1" = 1'-0"

muñoz & company
1017 NORTH MAIN SUITE 300
SAN ANTONIO, TEXAS 78212
O. 210.349.1163 F. 210.525.1038
W W W . M U N O Z - C O . C O M

REGISTERED ARCHITECT
ROY EDWARDS
78803
STATE OF TEXAS

11.08.18

UTRGV
The University of Texas Rio Grande Valley

UNIVERSITY OF TEXAS RIO GRANDE VALLEY
SCHOOL OF MEDICINE
TEAM BASED LEARNING CENTER
PROJECT NO: 903-1159
EDINBURG, TX
100% CONSTRUCTION DOCUMENTS

Issue/Revision

#	DESCRIPTION	DATE

Sheet Title
ENLARGED ELEVATOR PLANS AND SECTIONS

Date
NOVEMBER 08, 2018

Project Number	Drawn By	Checked By
A17021.00	RL	CC

Sheet Number
A-703

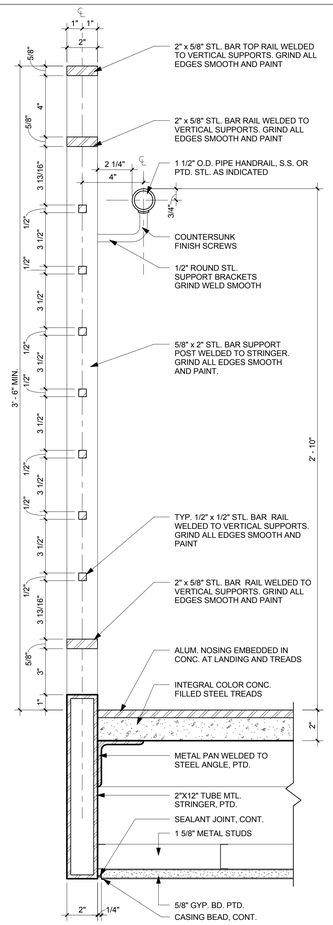

1 STAIR - GUARDRAIL W/ HANDRAIL
3" = 1'-0"

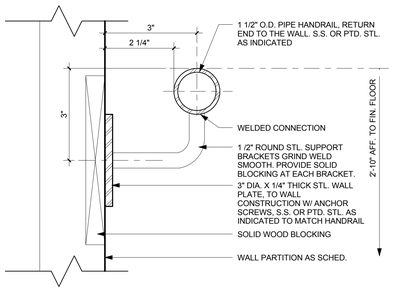

2 TYP. STAIR / RAMP HANDRAIL DETAIL
6" = 1'-0"

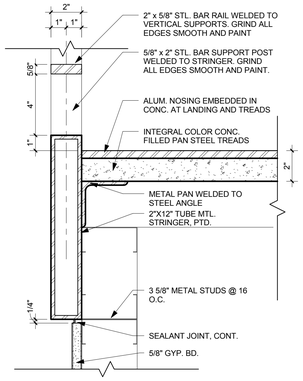

3 TYP. STAIR CONNECTION (BELOW STRINGER)
3" = 1'-0"

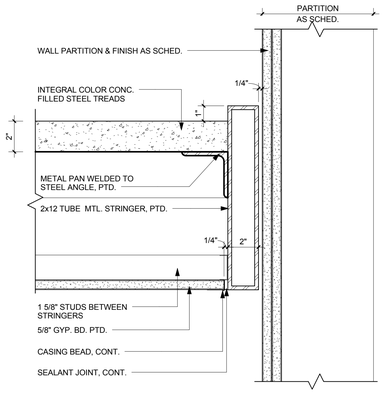

4 TYP. STAIR DETAIL AT WALL
3" = 1'-0"

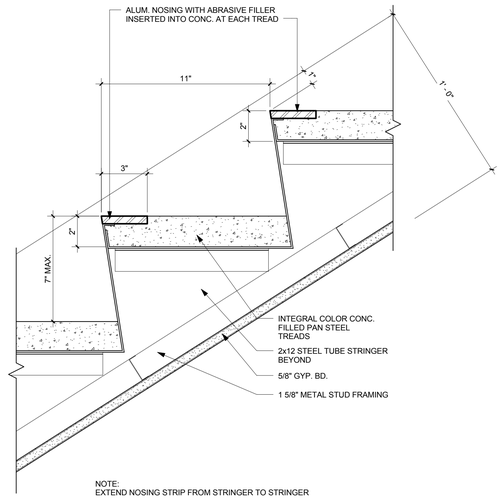

5 TYP. STAIR NOSING DETAIL
3" = 1'-0"

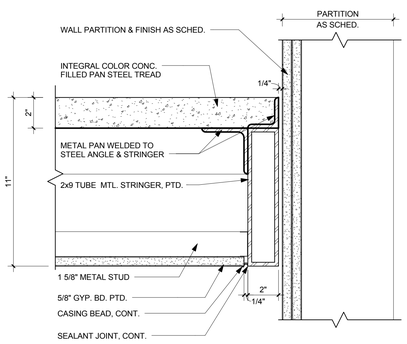

6 TYP. STAIR LANDING DETAIL AT WALL
3" = 1'-0"

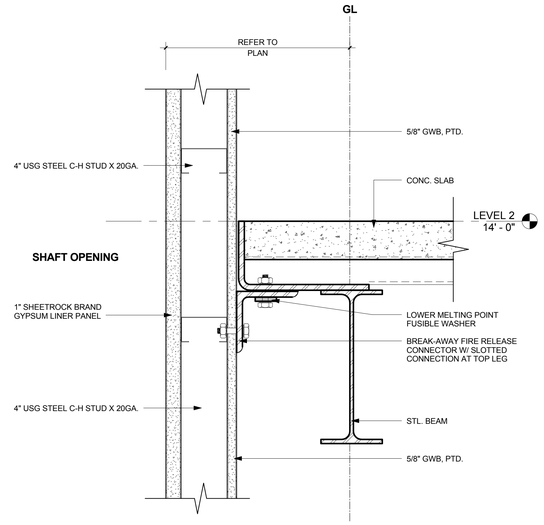

7 TYP. STAIR SHAFTWALL DETAIL
3" = 1'-0"

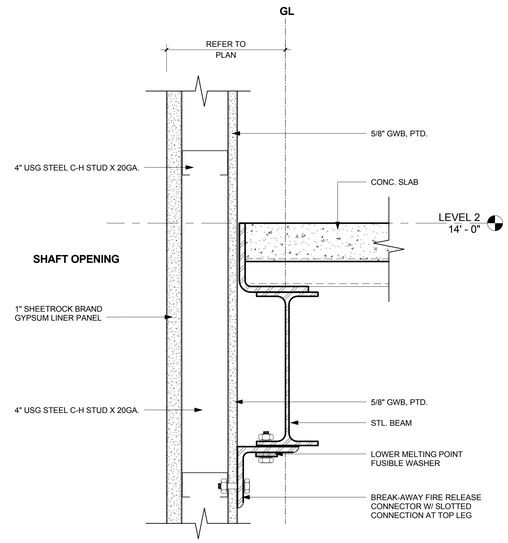

8 TYP. ELEVATOR SHAFTWALL DETAIL
3" = 1'-0"

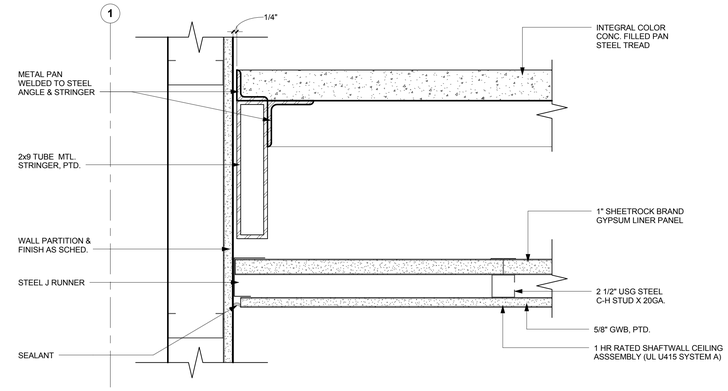

9 SHAFTWALL CEILING DETAIL
3" = 1'-0"

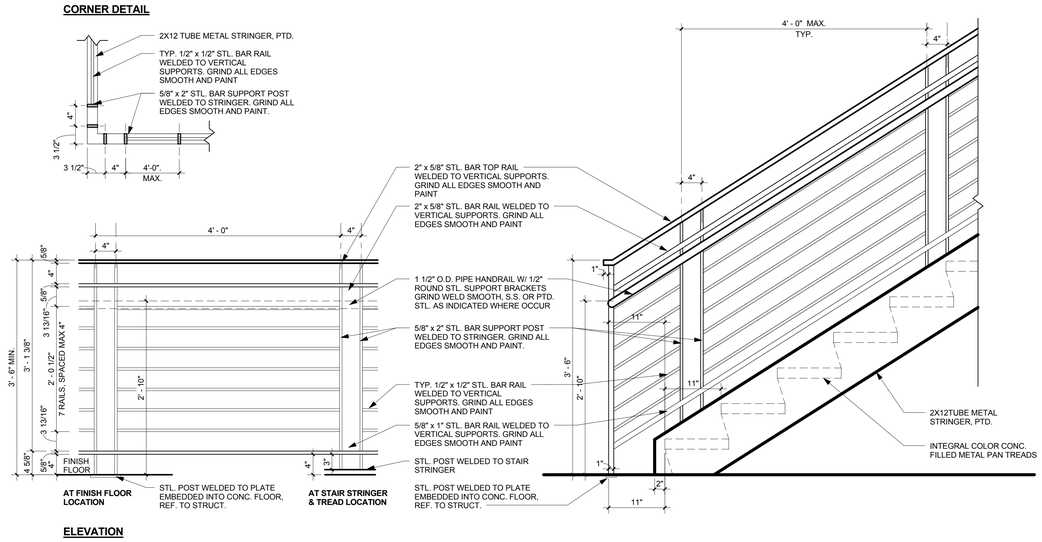

10 RAILING ELEVATION
1" = 1'-0"

muñoz & company
1017 NORTH MAIN SUITE 300
SAN ANTONIO, TEXAS 78212
O. 210.349.1163 F. 210.525.1038
W W W . M U N O Z - C O . C O M

REGISTERED ARCHITECT G. EDWARD CC 18809 STATE OF TEXAS
11.08.18

UTRGV
The University of Texas Rio Grande Valley

UNIVERSITY OF TEXAS RIO GRANDE VALLEY
SCHOOL OF MEDICINE TEAM BASED LEARNING CENTER
PROJECT NO: 903-1159
EDINBURG, TX
100% CONSTRUCTION DOCUMENTS

Issue/Revision

#	DESCRIPTION	DATE

Sheet Title
STAIR/RAIL DETAILS

Date
NOVEMBER 08, 2018

Project Number	Drawn By	Checked By
A17021.00	RL	CC

Sheet Number
A-704

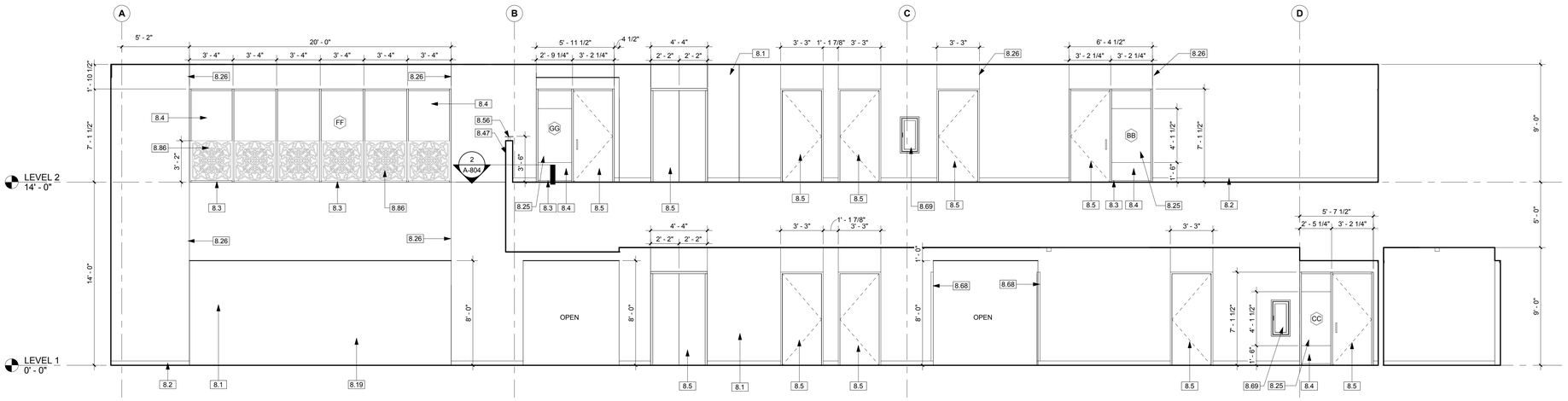

1 LOBBY 1.100 - NORTH
1/4" = 1'-0"

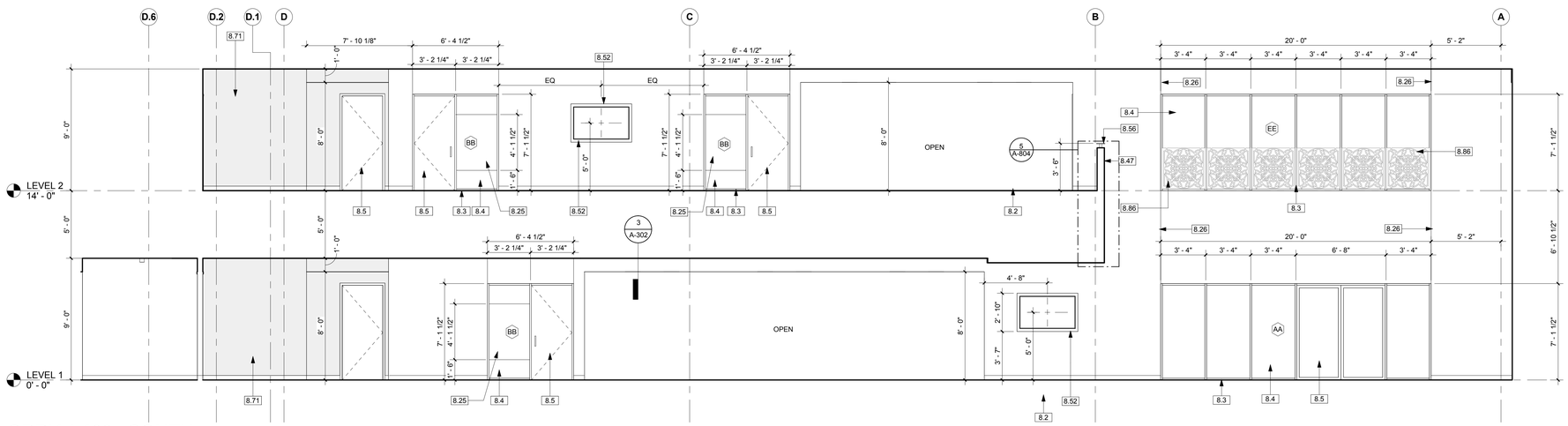

2 LOBBY 1.100 - SOUTH
1/4" = 1'-0"

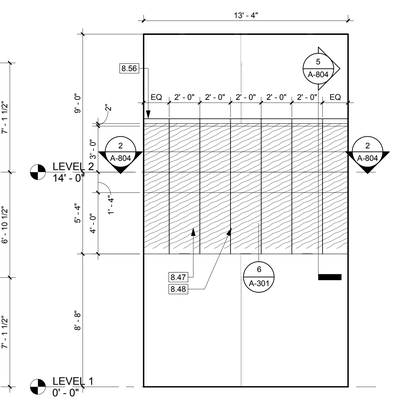

7 LOBBY 1.100 - WEST
1/4" = 1'-0"

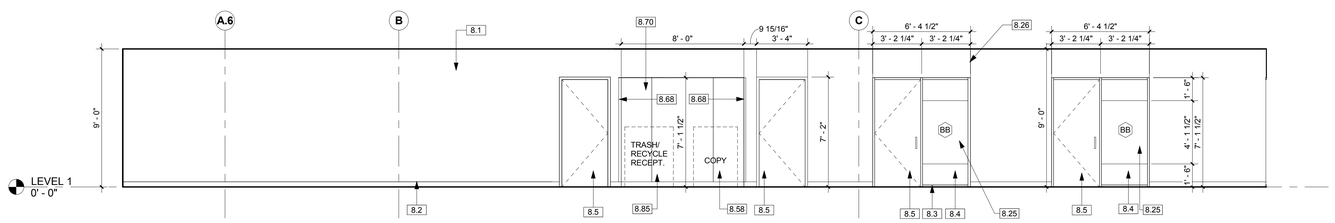

3 CORRIDOR 1.100B - NORTH
1/4" = 1'-0"

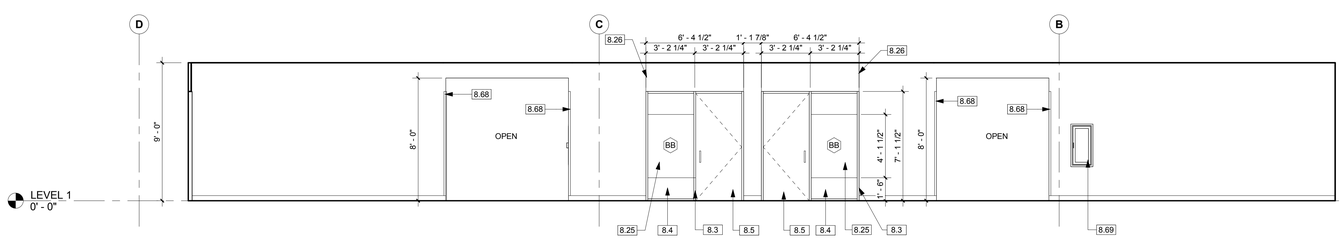

4 CORRIDOR 1.100B - SOUTH
1/4" = 1'-0"

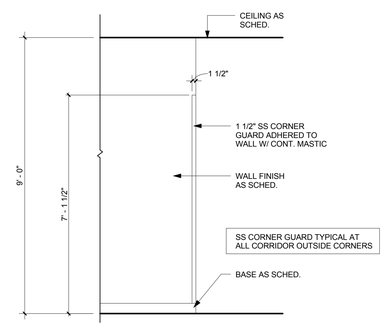

5 TYP. CORNER GUARD ELEVATION
1/2" = 1'-0"

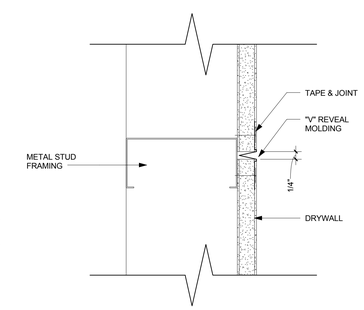

6 TYP. DRYWALL REVEAL DTL.
6" = 1'-0"

KEYNOTE LEGEND

8.1	PAINTED GYP. BD.
8.2	BASE AS SCHED.
8.3	INTERIOR ALUMINUM FRAMING SYSTEM
8.4	GLAZING AS SCHED.
8.5	DOOR AS SCHED.
8.19	BUILT IN BANQUETTE, SEE DETAIL
8.25	TRANSLUCENT FILM, TYPICAL AT ALL PBL, CONFERENCE/STUDY INTERIOR GLAZING
8.26	VERTICAL DRYWALL CONTROL JOINT, TYPICAL AT ALL DOOR AND INTERIOR ALUMINUM FRAME EDGES, SEE DETAIL 6/A-801
8.47	3/4" PLYWOOD PANEL, FACED WITH WOOD VENEER. Z-CLIPPED TO WALL
8.48	REVEAL AT WOOD PANEL, SEE DETAIL A-801
8.52	RECESSED MONITOR NICHE, DEPTH AS INDICATED ON ELEVATION. FINISH AND PARTITION TYPE TO MATCH ADJACENT PARTITION
8.56	STAINLESS STEEL BAR TOP RAIL WELDED TO VERTICAL SUPPORTS. GRIND ALL EDGES SMOOTH AND PAINT
8.58	COPIER, OWNER FURNISHED, OWNER INSTALLED
8.68	1 1/2" STAINLESS STEEL CORNER GUARD, SEE DETAIL 5/A-801
8.69	FULLY-RECESSED FIRE EXTINGUISHER CABINET, SEE DETAIL 4/A-804
8.70	PLAM-1 FACED WALL PANEL
8.71	VINYL WALL GRAPHIC APPLIED OVER ACCENT PAINT. ARTWORK PROVIDED BY ARCHITECT
8.85	RECYCLING CONTAINERS, OWNER FURNISHED, OWNER INSTALLED
8.86	CUSTOM PATTERN VINYL WINDOW FILM (ALTERNATE #11)

muñoz & company
1017 NORTH MAIN SUITE 300
SAN ANTONIO, TEXAS 78212
O. 210.349.1163 F. 210.525.1038
WWW.MUNOZ-CO.COM

REGISTERED ARCHITECT
GEOF EDWARDS
18803
STATE OF TEXAS
11.08.18

UTRGV
The University of Texas Rio Grande Valley

UNIVERSITY OF TEXAS RIO GRANDE VALLEY
SCHOOL OF MEDICINE
TEAM BASED LEARNING CENTER
PROJECT NO: 903-1159
EDINBURG, TX
100% CONSTRUCTION DOCUMENTS

Issue/Revision

#	DESCRIPTION	DATE

Sheet Title
INTERIOR ELEVATIONS

Date
NOVEMBER 08, 2018

Project Number	Drawn By	Checked By
A17021.00	RL	CC

Sheet Number
A-801

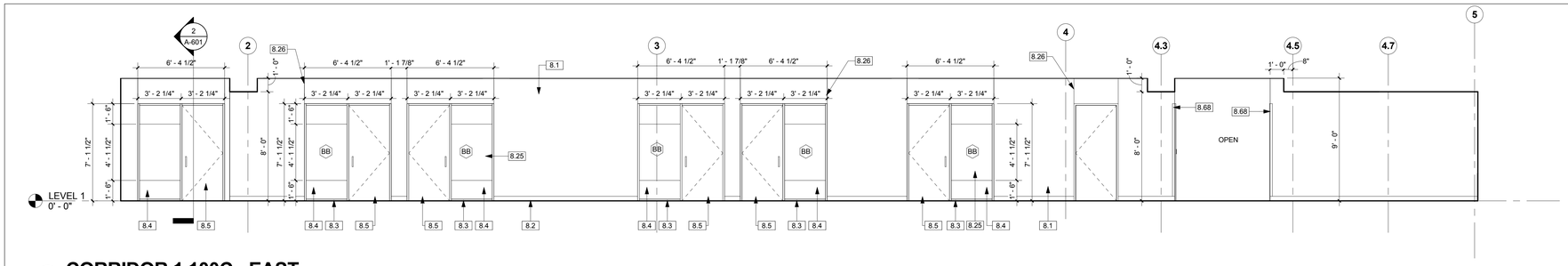

1 CORRIDOR 1.100C - EAST
1/4" = 1'-0"

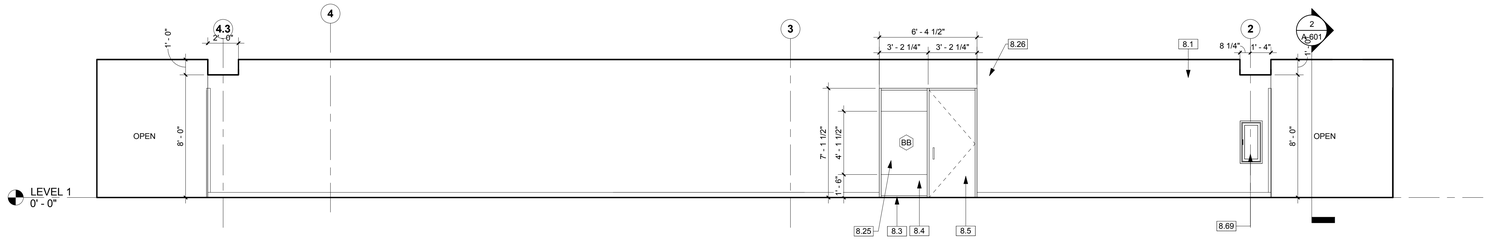

2 CORRIDOR 1.100C - WEST
1/4" = 1'-0"

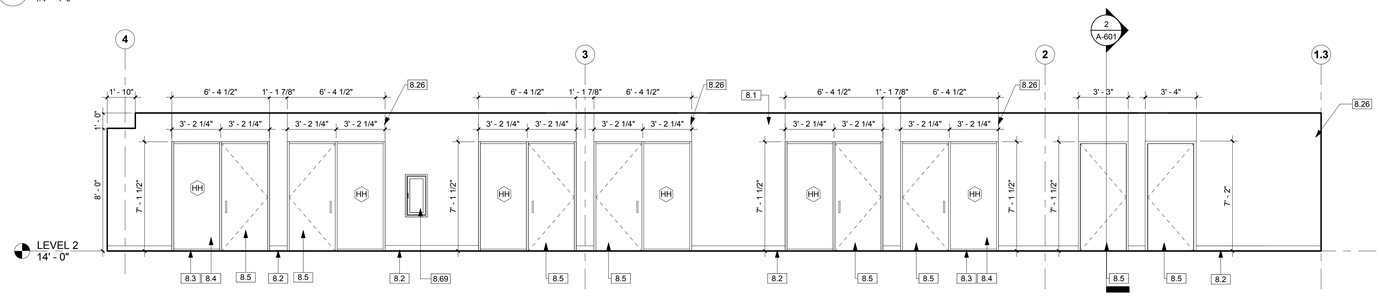

3 CORRIDOR 2.100B - WEST
1/4" = 1'-0"

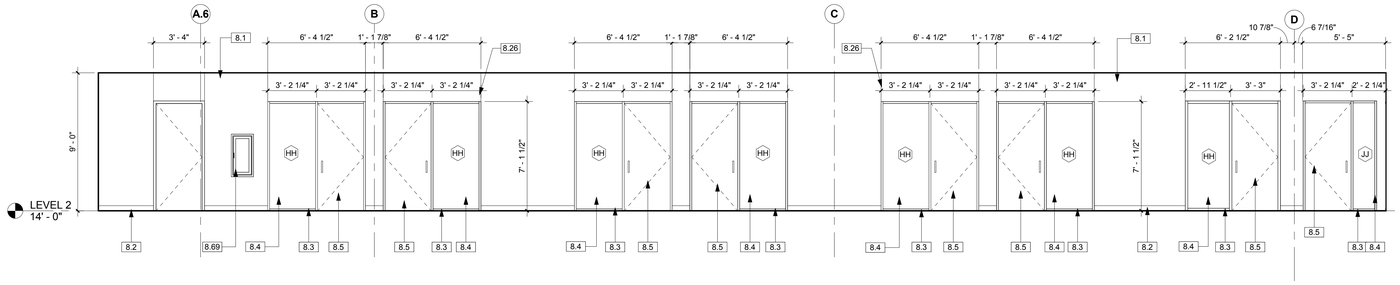

4 CORRIDOR 2.100C - NORTH
1/4" = 1'-0"

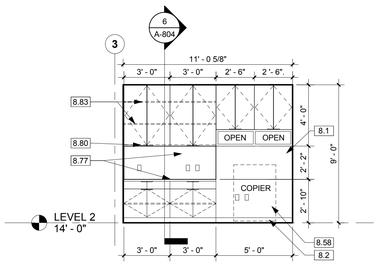

5 COPY/WORK ROOM 2.128 - WEST
1/4" = 1'-0"

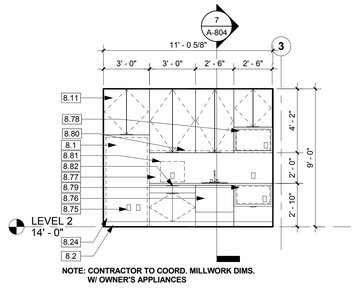

NOTE: CONTRACTOR TO COORD. MILLWORK DIMS. W/ OWNER'S APPLIANCES

6 COFFEE 2.128A - EAST
1/4" = 1'-0"

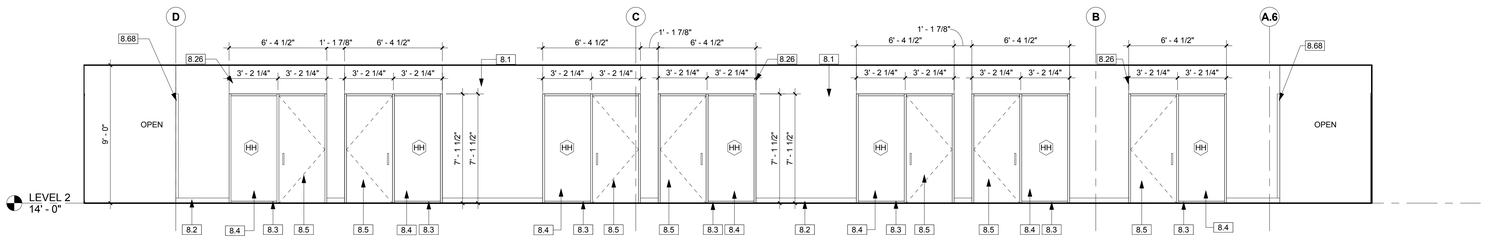

7 CORRIDOR 2.100C - SOUTH
1/4" = 1'-0"

KEYNOTE LEGEND

8.1	PAINTED GYP. BD.
8.2	BASE AS SCHED.
8.3	INTERIOR ALUMINUM FRAMING SYSTEM
8.4	GLAZING AS SCHED.
8.5	DOOR AS SCHED.
8.11	12" DEEP P.LAM UPPER CABINET W/ ADJUSTABLE SHELVES. ALL DOORS TO BE LOCKABLE
8.23	SOLID SURFACE BACKSPLASH
8.24	REFRIGERATOR, N.I.C., REF. TO PLUMBING
8.25	TRANSLUCENT FILM, TYPICAL AT ALL PBL, CONFERENCE/STUDY INTERIOR GLAZING
8.26	VERTICAL DRYWALL CONTROL JOINT, TYPICAL AT ALL DOOR AND INTERIOR ALUMINUM FRAME EDGES, SEE DETAIL 6/A-801
8.58	COPIER, OWNER FURNISHED, OWNER INSTALLED
8.68	1 1/2" STAINLESS STEEL CORNER GUARD, SEE DETAIL 5/A-801
8.69	FULLY-RECESSED FIRE EXTINGUISHER CABINET, SEE DETAIL 4/A-804
8.75	POWER & WATER FOR REFRIGERATOR
8.76	REMOVABLE PANEL
8.77	SOLID SURFACE COUNTER & FULL HEIGHT BACKSPLASH
8.78	MICROWAVE
8.79	UNDER-COUNTER MICROWAVE
8.80	CONCEALED LED STRIP LIGHT WITH VALENCE
8.81	COFFEE MAKER, OWNER FURNISHED OWNER INSTALLED
8.82	CABINET PULLS: "MOCKETT DP213 B SATIN ALUMINUM"
8.83	ADJUSTABLE SHELVES

muñoz & company
1017 NORTH MAIN SUITE 300
SAN ANTONIO, TEXAS 78212
O. 210.349.1163 F. 210.525.1038
WWW.MUNOZ-CO.COM

REGISTERED ARCHITECT
GEOF EDWARDS
18803
STATE OF TEXAS
11.08.18

UTRGV
The University of Texas Rio Grande Valley

UNIVERSITY OF TEXAS RIO GRANDE VALLEY
SCHOOL OF MEDICINE
TEAM BASED LEARNING CENTER
PROJECT NO: 903-1159
EDINBURG, TX
100% CONSTRUCTION DOCUMENTS

Issue/Revision

#	DESCRIPTION	DATE

Sheet Title
INTERIOR ELEVATIONS

Date
NOVEMBER 08, 2018

Project Number	Drawn By	Checked By
A17021.00	RL	CC

Sheet Number
A-802

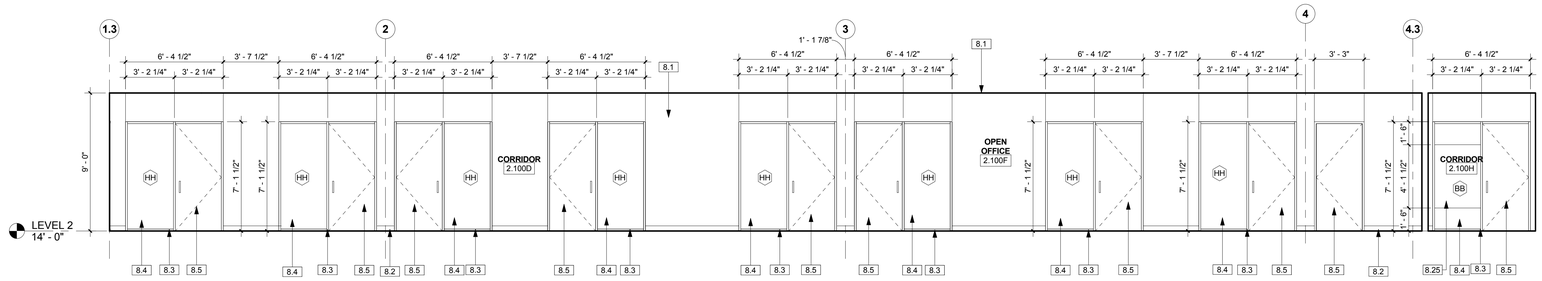

1 CORRIDOR 2.100D - EAST
1/4" = 1'-0"

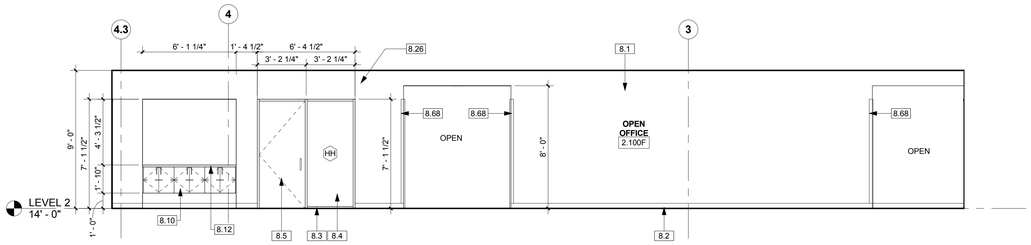

2 OPEN OFFICE 2.100F- WEST
1/4" = 1'-0"

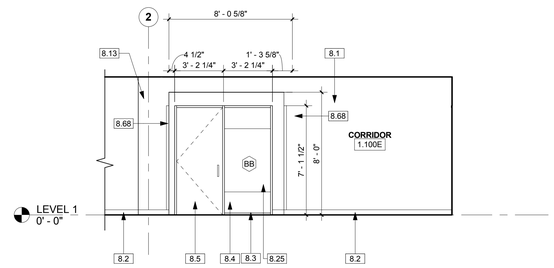

3 CORRIDOR 1.100E - WEST
1/4" = 1'-0"

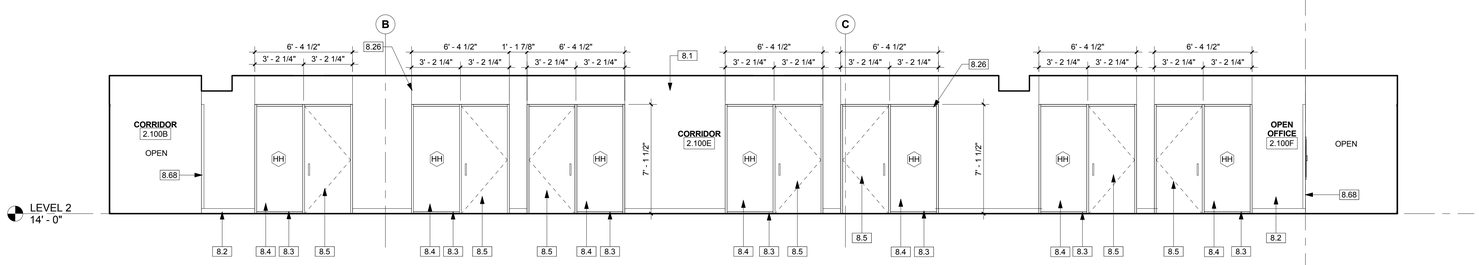

4 CORRIDOR 2.100E - NORTH
1/4" = 1'-0"

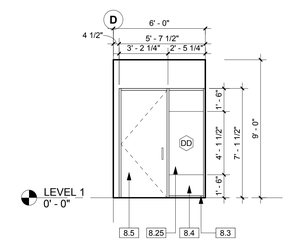

5 CORRIDOR 1.100E - NORTH
1/4" = 1'-0"

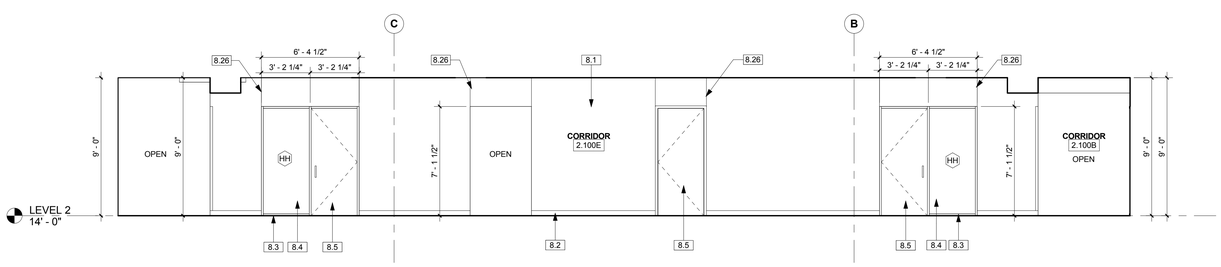

6 CORRIDOR 2.100E - SOUTH
1/4" = 1'-0"

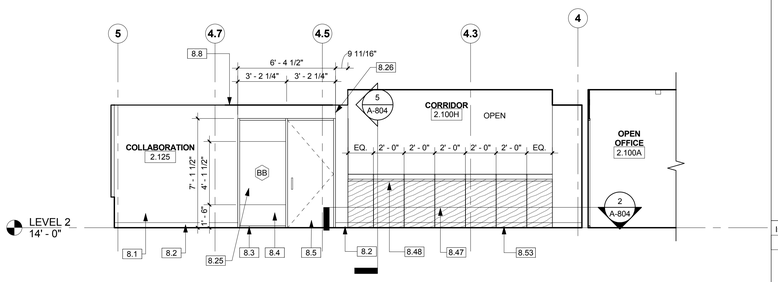

7 COLLAB. SPACE 2.125 - WEST
1/4" = 1'-0"

KEYNOTE LEGEND

8.1	PAINTED GYP. BD.
8.2	BASE AS SCHED.
8.3	INTERIOR ALUMINUM FRAMING SYSTEM
8.4	GLAZING AS SCHED.
8.5	DOOR AS SCHED.
8.8	PAINTED GYP SOFFIT/ CEILING
8.10	24" DEEP P.LAM BASE CABINET W/ ADJUSTABLE SHELVES. ALL DOORS AND DRAWERS TO BE LOCKABLE
8.12	SOLID SURFACE COUNTERTOP
8.13	PAINTED GYP. BOARD PILASTERS
8.25	TRANSLUCENT FILM, TYPICAL AT ALL PBL, CONFERENCE/STUDY INTERIOR GLAZING
8.26	VERTICAL DRYWALL CONTROL JOINT, TYPICAL AT ALL DOOR AND INTERIOR ALUMINUM FRAME EDGES, SEE DETAIL 6/A-801
8.47	3/4" PLYWOOD PANEL, FACED WITH WOOD VENEER. Z-CLIPPED TO WALL
8.48	REVEAL AT WOOD PANEL, SEE DETAIL A-801
8.53	WOOD PANEL BASE, SEE DETAIL A-801
8.68	1 1/2" STAINLESS STEEL CORNER GUARD, SEE DETAIL 5/A-801

muñoz & company
1017 NORTH MAIN SUITE 300
SAN ANTONIO, TEXAS 78212
O. 210.349.1163 F. 210.525.1038
WWW.MUNOZ-CO.COM

REGISTERED ARCHITECT GEOF EDWARDS 18803 STATE OF TEXAS
11.08.18

UTRGV
The University of Texas Rio Grande Valley

UNIVERSITY OF TEXAS RIO GRANDE VALLEY
SCHOOL OF MEDICINE
TEAM BASED LEARNING CENTER
PROJECT NO: 903-1159
EDINBURG, TX
100% CONSTRUCTION DOCUMENTS

Issue/Revision

#	DESCRIPTION	DATE

Sheet Title
INTERIOR ELEVATIONS

Date
NOVEMBER 08, 2018

Project Number	Drawn By	Checked By
A17021.00	RL	CC

Sheet Number
A-803

KEYNOTE LEGEND	
8.1	PAINTED GYP. BD.
8.2	BASE AS SCHED.
8.3	INTERIOR ALUMINUM FRAMING SYSTEM
8.4	GLAZING AS SCHED.
8.5	DOOR AS SCHED.
8.26	VERTICAL DRYWALL CONTROL JOINT, TYPICAL AT ALL DOOR AND INTERIOR ALUMINUM FRAME EDGES, SEE DETAIL 6/A-801

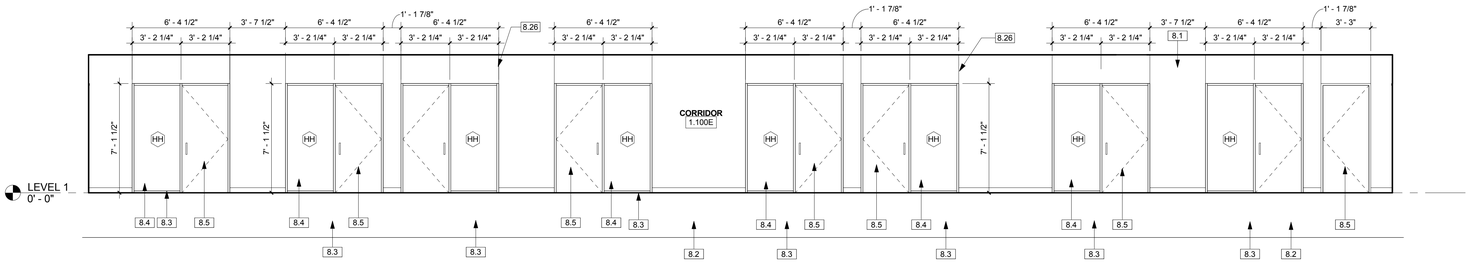

1 CORRIDOR 1.100E - SOUTH
1/4" = 1'-0"

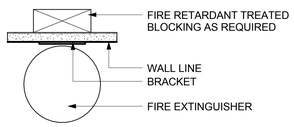

NOTE:
MOUNT 3'-0" A.F.F. TO BOTTOM
SPEC. 10010

3 BRACKET MOUNTED FIRE EXTINGUISHER
3" = 1'-0"

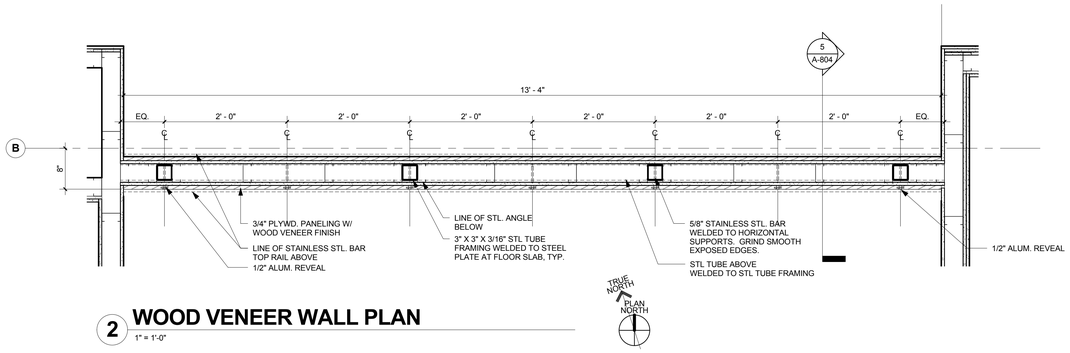

2 WOOD VENEER WALL PLAN
1" = 1'-0"

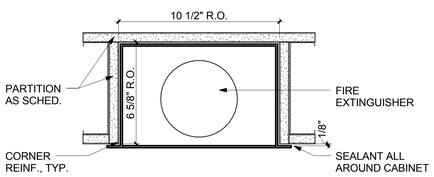

NOTES:
1. CABINET TO BE MOUNTED 5'-0" A.F.F. TO TOP OF CABINET
2. VERIFY CABINET ROUGH OPENING WITH CABINET MANUFACTURER

FULLY RECESSED FIRE EXTINGUISHER CABINET
4
3" = 1'-0"

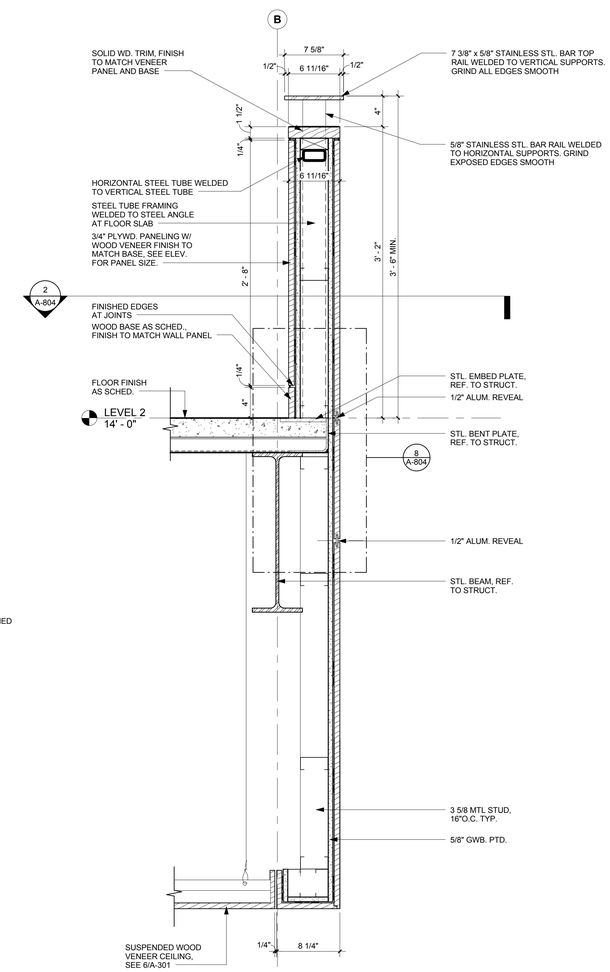

5 WOOD PANEL VENEER WALL
1 1/2" = 1'-0"

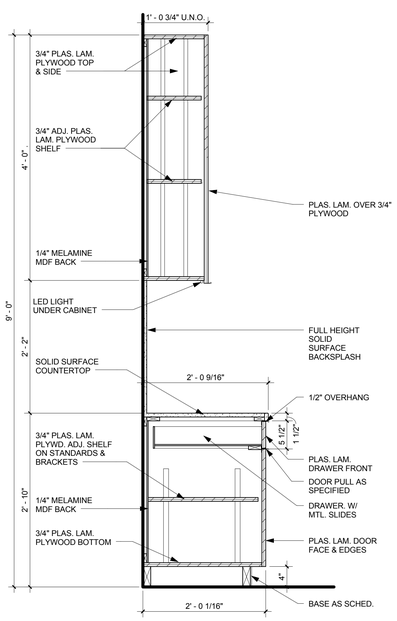

6 TYP. BASE & WALL CABINET
1" = 1'-0"

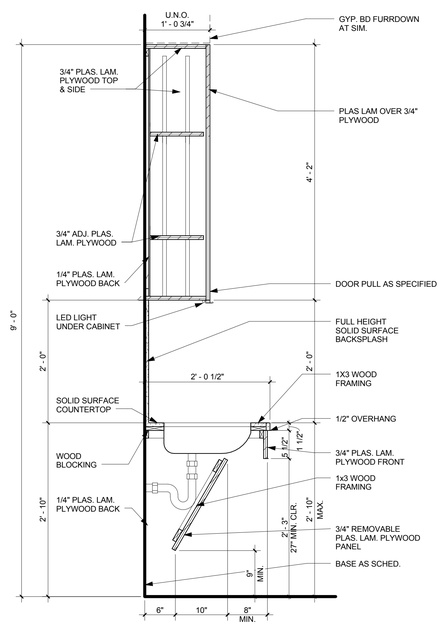

7 TYP. BASE SINK W/ WALL CABINET
1" = 1'-0"

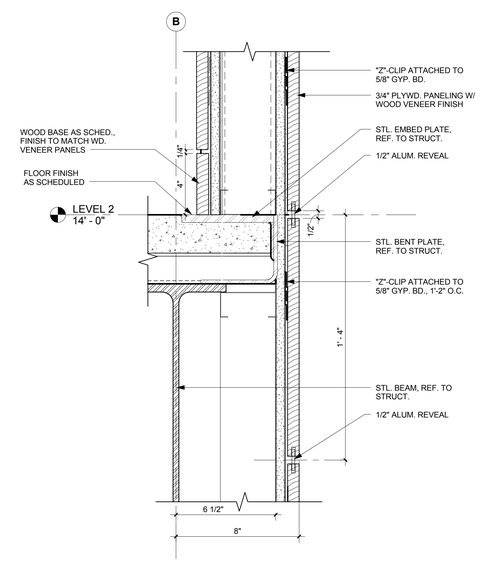

8 WOOD PANEL VENEER DETAIL
3" = 1'-0"

muñoz & company
1017 NORTH MAIN SUITE 300
SAN ANTONIO, TEXAS 78212
O. 210.349.1163 F. 210.525.1038
WWW.MUNOZ-CO.COM

REGISTERED ARCHITECT
KEOF EDWARDS
18803
STATE OF TEXAS
11.08.18

UTRGV
The University of Texas Rio Grande Valley

UNIVERSITY OF TEXAS RIO GRANDE VALLEY
SCHOOL OF MEDICINE
TEAM BASED LEARNING CENTER
PROJECT NO: 903-1159
EDINBURG, TX
100% CONSTRUCTION DOCUMENTS

Issue/Revision

#	DESCRIPTION	DATE

Sheet Title
INTERIOR ELEVATIONS

Date
NOVEMBER 08, 2018

Project Number	Drawn By	Checked By
A17021.00	RL	CC

Sheet Number
A-804

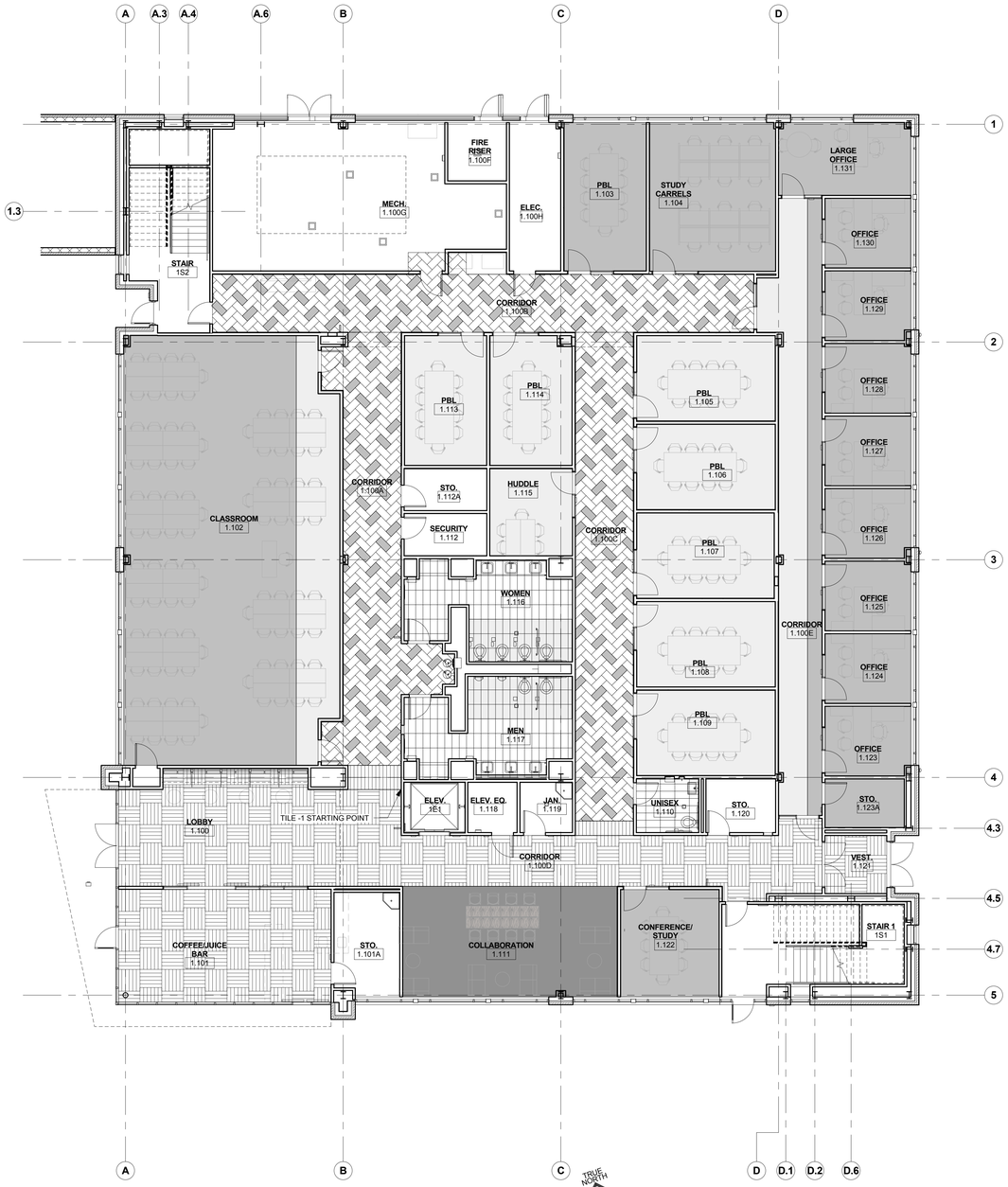

1 LEVEL ONE FLOOR PATTERN PLAN

1/8" = 1'-0"

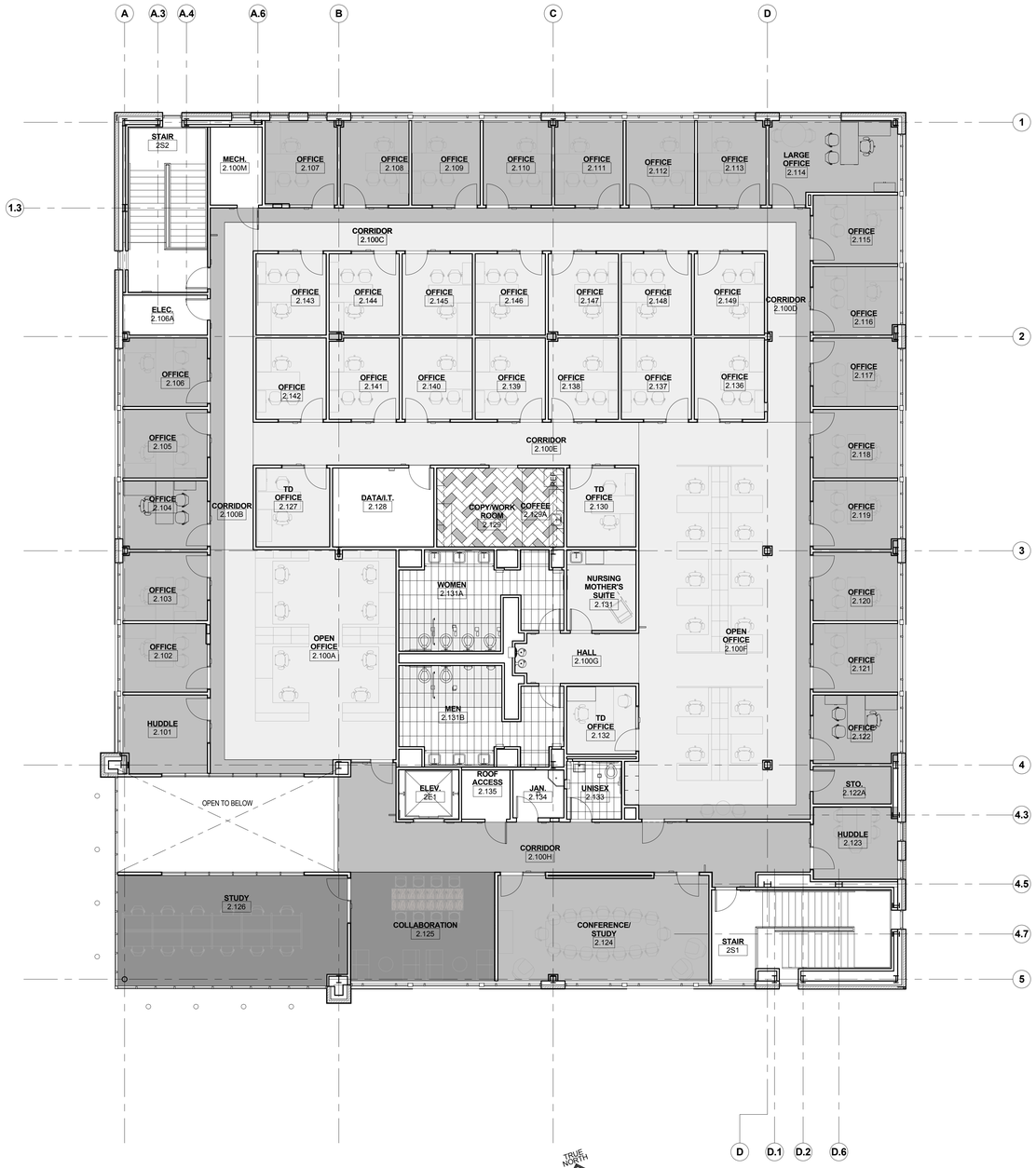

2 LEVEL TWO FLOOR PATTERN PLAN

1/8" = 1'-0"

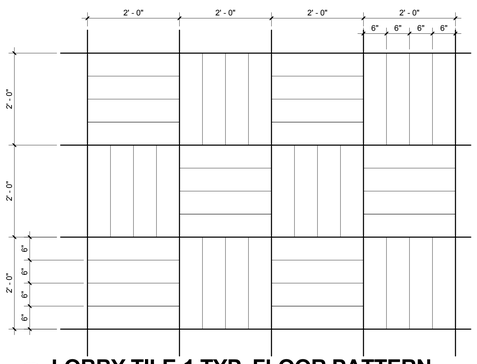

3 LOBBY TILE-1 TYP. FLOOR PATTERN

3/4" = 1'-0"

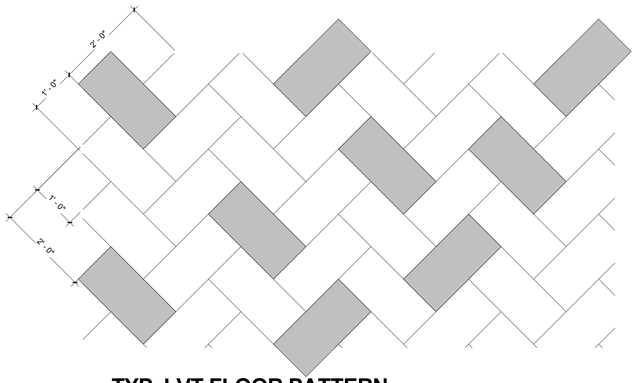

4 TYP. LVT FLOOR PATTERN

3/4" = 1'-0"

FLOOR PATTERN LEGEND (REFER TO 019000 SEC.)

- LUXURY VINYL TILE (LVT)
- CERAMIC TILE (CT-1)
- CERAMIC TILE (CT-2)
- MODULAR CARPET TILE (CPT-1A)
- MODULAR CARPET TILE (CPT-1B)
- MODULAR CARPET TILE (CPT-2)

muñoz & company
1017 NORTH MAIN SUITE 300
SAN ANTONIO, TEXAS 78212
O. 210.349.1163 F. 210.525.1038
W W W . M U N O Z - C O . C O M

REGISTERED ARCHITECT GREGORY EDWARDS 18809 STATE OF TEXAS

11.08.18

UTRGV
The University of Texas Rio Grande Valley

UNIVERSITY OF TEXAS RIO GRANDE VALLEY

SCHOOL OF MEDICINE TEAM BASED LEARNING CENTER

PROJECT NO: 903-1159

EDINBURG, TX

100% CONSTRUCTION DOCUMENTS

Issue/Revision

#	DESCRIPTION	DATE

Sheet Title: FLOOR PATTERN PLANS

Date: NOVEMBER 08, 2018

Project Number	Drawn By	Checked By
A17021.00	RL	CC

Sheet Number

A-901

S T R U C T U R A L N O T E S

1000 COORDINATION

A. The Contractor shall compare the Architectural, Structural, Mechanical, Electrical, Plumbing, and other series drawings and report any discrepancies between each set of drawings and within each set of drawings prior to fabrication and installation of any structural members.

B. Only larger sleeve openings and framed openings in structural framing component members are indicated on the Structural Drawings. However, all sleeves, inserts and openings, including frames and/or sleeves shall be provided for passage, provision and/or incorporation of the work of the contract, including but not limited to Mechanical, Electrical and Plumbing work. This work shall include the coordination of sizes, alignment, dimensions, position, locations, elevations and grades as required to serve the intended purpose. Openings not indicated on the Structural Drawings, but required as noted above, shall be submitted to the Engineer for review.

C. Refer to Architectural, Mechanical, Electrical and Plumbing drawings for floor elevations, slopes, drains and location of depressed and elevated floor areas.

D. Compatibility of the structure and provisions for building equipment supported on or from structural components shall be verified as to size, dimensions, clearances, accessibility, weights and reaction with the equipment for which the structure has been designed prior to submission of shop drawings and data for each piece of equipment and for structural components. Differences shall be noted on the submittals.

E. Shop drawings shall be prepared for all structural items and submitted for review by the Engineer. Shop drawings shall be complete for each structural item and not separated in multiple parts for different areas of the building. Structural Drawings shall not be reproduced and used as shop drawings. All items deviating from the Structural Drawings or from previously submitted shop drawings shall be clouded.

F. The details designated as "Typical Details" apply generally to the Structural Drawings in all areas where conditions are similar to those described in the details.

G. All structural elements of the project have been designed by the Engineer to resist the required Code vertical and lateral forces that could occur in the final completed structure only. It is the responsibility of the Contractor to provide all required bracing during construction to maintain the stability and safety of all structural elements during the construction process until the lateral-load resisting or stability-providing system is completely installed and the structure is completely tied together. Temporary supports shall not result in the overstress or damage of the elements to be braced nor any elements used as brace supports.

H. The Contract Structural Drawings and Specifications represent the finished structure, and except where specifically shown, do not indicate the means or methods of construction. The Contractor and their Sub-Contractors shall supervise and direct the Work and shall be solely responsible for all construction means, methods, procedures, techniques, sequences and safety measures including, but not limited to, adherences to all OSHA guidelines. The Engineer shall not have control of, and shall not be responsible for, construction means, methods, techniques, sequences or procedures, for safety precautions and programs in connection with the Work, for the acts or omissions of the Contractor, Subcontractors, or any other person performing any of the Work, or for the failure of any of these persons to carry out the Work in accordance with the Structural Contract Documents.

I. Where conflict exists among the various parts of the Structural Contract Documents, Structural Drawings, General Notes, and Specifications, the strictest requirements, as indicated by the Engineer, shall govern.

J. Periodic site observation by field representatives of Intelligent Engineering Services, LLP (IES) is solely for the purpose of determining if the Work is proceeding in accordance with the Structural Contract Documents. This limited site observation is not intended to be a check of the quality or quantity of the Work, but rather a periodic check in an effort to inform the Owner against defects and deficiencies in the work of the Contractor.

1010 SUBSTITUTIONS

A. All requests for substitutions of materials or details shown in the Structural Contract Documents shall be submitted for approval during the bidding period.

B. Once bids are accepted, proposed substitutions will be considered only when they are officially submitted with an identified savings or duration to be deducted from the contract and/or schedule impact. Submittals not satisfying the above criteria will not be reviewed.

1020 CODES

A. The 2015 International Building Code is used as the basis for the structural design.

B. The University of Texas System Owner's Design Guidelines Appendix K - Structural Criteria, March 1, 2010.

1030 IBC 2015 DESIGN LOADS

A. Dead Loads include the self-weight of the structural elements and the following superimposed loads:

Ceiling and Mechanical at roof	10 psf
Ceiling and Mechanical at floors	10 psf
Roofing and rigid insulation	8 psf
Topping slab, per inch of thickness	12.5 psf

B. Live Loads

OCCUPANCY OR USE	UNIFORM (psf)	CONCENTRATED (lbs.)
Partitions at areas with Live Load of 80 psf or less	20	N/A
Assembly areas		
Lobbies	100	N/A
Corridors		
First floor	100	N/A
Other floors	Same as occupancy served except as indicated	
Elevator machine room	150	Equip Wt
Mechanical rooms	150	Equip Wt
Office Buildings		
Lobbies and first floor corridors	100	2000
Offices	80	2000
Corridors above first floor	80	2000
File / Computer rooms	150	2000
Restrooms	80	2000
Roof	30	300
Schools		
Classrooms	80	1000
Corridors above first floor	80	1000
First floor corridors	100	1000
Stairs and exits	100	300

Notes:

1. Live Load Reduction
   a. Floor live loads have been reduced in accordance with the International Building Code, Section 1607.10 as follows:

$$LL_{red} = LL\ (0.25+(15/\ sqrt(K_{ll}*A_t))$$

Where LL_{red} = Reduced Live Load (psf)
LL = Unreduced Live Load (psf)
K_{ll} = Live Load Element Factor
A_t = Tributary Area (sf)

   b. No reduction of the floor live load has been taken for slabs, joists, or members supporting less than 150 square feet. The reduction, R, shall not exceed 20 percent.

   c. Live loads exceeding 100 pounds per square foot have not been reduced, except columns supporting 2 or more stories, live loads have been reduced 20 percent.

C. Roof Live Loads

ROOF USE	ROOF LIVE LOAD UNIFORM	ROOF LIVE LOAD CONCENTRATED
Flat or rise less than 1" per foot (Non-reducible)	30 psf	N/A

D. Snow Loads

Ground snow load, Pg	0 psf

1030 IBC 2015 DESIGN LOADS

E. Wind loads

1. Wind lateral load on structural frame is based on ASCE 7 using the following:

Ultimate Design Wind Speed (V_{ult})	140 mph
Nominal Design Wind Speed (V_{asd})	107 mph
Exposure Category	C
Internal Pressure Coefficient, GCpi	+/-0.18
Risk Category	III

2. Ultimate Level Components and Cladding Wind Pressures:

Surface	(psf)	Zone	Area, A_L (ft^2)
Exterior Walls	+46	Interior and edge	10 or less
	-49	Interior	10 or less
	-61	Edges	10 or less
	+34	Interior and edge	500 or greater
	-38	Interior and edge	500 or greater
Roof*	+21	Interior, edges, and corners	10 or less
	-50	Interior	10 or less
	-83	Edges	10 or less
	-125	Corners	10 or less
	+16	Interior	100 or greater
	-46	Interior	100 or greater
	-54	Edges and corners	100 or greater

1. Pressures for Tributary Areas in between the listed values may be linearly interpolated.
2. Negative value signifies pressure acting away from the surface (suction).
3. Edge and Corner zone distances shall be determined in accordance with referenced standard.
4. Pressures on parapets shall be determined by combining positive and negative wall pressures or wall and roof pressures listed above in accordance with the referenced standard.
5. Per code-defined ASD load combinations, nominal components and cladding wind pressures shall be taken as 60% of the listed "Ultimate Components and Cladding Wind Pressures.

* Pressures are for gross uplift conditions. Refer to roof plan(s) for net uplift values for design of joists, joist girders, and bridging.

F. Seismic Loads

1. The structure and structural components of the building have been designed in accordance with International Building Code with the following criteria:

Seismic Importance Factor, IE	1.25
Occupancy Category	III
Mapped Spectral Response Accelerations	
Ss (g)	0.043
S1 (g)	0.015
Site Class	D
Spectral Response Coefficients	
SDS (g)	0.046
SD1 (g)	0.024
Seismic Design Category	A
Basic Seismic-force-resisting system	SOCBF
Design Base Shear, V	N/A
Seismic Response Coefficient(s), Cs	0.01
Response Modification Factor(s), R	3 ½
Analysis Procedure Used	Equivalent Lateral Force

G. Vertical Transportation System Loads

1. Elevators: Structural elements supporting elevators are designed based on published data for the following elevator types:
   a. Endura ThyssenKrupp Elevator.
2. The Contractor shall submit to the Structural Engineer final elevator shop drawings showing all loads to the structure prior to the installation of the elevators for verification of load carrying capacity.

H. Mechanical/Kitchen Equipment Loads

1. Loading for mechanical rooms and kitchens are based on the weights of equipment and concrete pads as indicated on the Structural Drawings. The Contractor shall submit actual weights of equipment to be used in the project to the Structural Engineer for verification of loads used in the design at least three weeks prior to fabrication and construction of the supporting structure. Any revisions in equipment type, size, or quantity shall be reported to the Architect immediately for verification of the structural design.

I. Stair Rails: The handrails and supporting structure shall be capable of withstanding a 200 pound load applied in any direction at any point on the rail.

J. Concentrated Load for Stair Treads and Ladder Rungs: The individual stair treads and ladder rungs shall be designed to support a 300 pound concentrated load placed in a position, which would cause maximum stress.

K. Load Combinations

1. Strength Design

   a. 1.4(D+F)
   b. 1.2(D+F) + 1.6(L+H) + 0.5(Lr or S or R)
   c. 1.2(D+F) + 1.6(Lr or S or R) + 1.6H + (f1*L or 0.5W)
   d. 1.2(D+F) + 1.0W + f1*L + 1.6H + 0.5(Lr or S or R)
   e. 1.2(D+F) + 1.0E + f1*L + 1.6H + f2*S
   f. 0.9D + 1.0W + 1.6H
   g. 0.9(D+F) + 1.0E + 1.6H

2. Allowable Stress Design:

   a. D + F
   b. D + H + F + L
   c. D + H + F + (Lr or S or R)
   d. D + H + F + 0.75L + 0.75(Lr or S or R)
   e. D + H + F + (0.6W or 0.7E)
   f. D + H + F + 0.75(0.6W) + 0.75L + 0.75(Lr or S or R)
   g. D + H + F + 0.75(0.7E) + 0.75L + 0.75(S)
   h. 0.6D + 0.6W + H
   i. 0.6(D+F) + 0.7E + H

1040 BUILDING MOVEMENTS

A. The building movements specified herein are anticipated to occur and shall be taken into account by the Contractor in the design, detailing, and installation of the building elements.

B. Spandrel beam deflections: Provisions shall be made in the building cladding for relative floor to floor vertical deflections of L/600 or 1" whichever is greater.

C. Interior floor/roof deflections: Provisions shall be made in interior partitions and other elements supported by or attached to the floors or roofs for relative floor to floor vertical deflections of L/240.

D. Slab-on-grade movement: Provisions shall be made in the building cladding and interior partitions for relative deflections between the soil-supported slab on grade and the roof or floor level directly above. Design of soil supported building slabs is based on a range of [lower limit] 0 inches to [upper limit] 1 inch, based on the recommendations of the project geotechnical report. Refer to Building Pad Preparation Notes for soil stabilization under soil-supported building slabs.

E. Lateral building drift: Provisions shall be made in building cladding and other architectural finishes for relative floor to floor lateral deflections of story height/400.

1100 SUBMITTALS

A. Shop drawings shall be prepared for all structural items and submitted for review by the Engineer. Structural Drawings shall not be reproduced and used as shop drawings. All items deviating from the Structural Drawings or from previously submitted shop drawings shall be clouded.

B. Contractor shall review shop drawings for compliance with the Structural Drawings and shall certify that they have done so by a stamp noting that the drawings have been "Approved" and which bears the signature (or initials) of an authorized representative of the Contractor and the date. Submittals which do not reflect the Contractor's approval, signature and date will be returned without review.

C. Contractor shall be responsible for delays caused by rejection of inadequate shop drawings.

D. Where review and return of shop drawings is required or requested, the Engineer will review each submittal and, where possible, return within two weeks of receipt.

E. Corrections or comments on shop drawings or manufacturer's data sheets do not relieve the Contractor from compliance with requirements of the plans and specifications. Engineer's review is for general conformance with the requirements of the Structural Drawings. Contractor is responsible for confirming and correcting all quantities and dimensions, selecting fabrication processes and techniques of construction, and coordinating the work with that of all other contractors.

F. Refer to individual sections for specific submittal requirements.

2260 EXCAVATION PROTECTION:

A. The sides of all excavations greater than 5'-0" in depth shall be laid back to a slope of 3 horizontal to 1 vertical, unless the following applies:

1. A steeper slope is allowed by the Geotechnical Engineer for the particular location and site conditions in question.
2. A temporary retention system is indicated on the Structural Drawings.
3. An alternative protective system is submitted by the Contractor and allowed by the Owner.

B. Contractor shall submit drawings and calculations sealed by a Professional Engineer licensed in the State of Texas for the design of any temporary retention or alternative protective systems. Temporary retention or alternative protective systems shall be designed to resist the soil pressures stipulated in the project geotechnical report prepared by RGKI, dated March 1, 2018. In addition, the design shall consider surcharges created by construction equipment, excavation spoil, and other surface encumbrances.

C. Contractor shall comply with all Occupational Safety and Health Administration standards and all other regulatory agency standards regarding excavation safety.

2315 BUILDING PAD PREPARATION:

A. Structural select fill materials:

1. Shall be crushed stone or gravel aggregate. The select fill material shall have a minimum fill depth of 3'-0" and shall meet the requirements of TXDOT 2014 Standard Specification for Construction and Maintenance of Highways, Streets and Bridges, Item 247, Flexible Base, Type A through Type E, Grades 1 through 3, and 5.
2. As an alternate fill layer below the 3'-0" minimum crushed stone or aggregate select fill, the following soils, as classified according to the USCS, may be considered satisfactory for the use as select fill: SC GC, CL and combinations of these soils. Alternative select fill materials shall have a maximum liquid limit of 40 percent, a plasticity index between 7 and 18 percent and a maximum particle size not exceeding 4 inches or one-half the loose lift thickness, whichever is smaller. If these materials are utilized, grain size analyses and Atterberg Limits must be performed during placement at a minimum rate of one test per 5,000 cubic yards of material.
3. If the alternative select fill materials are used they shall be submitted to the Geotechnical Engineer for pre-approval a minimum of 10 working days prior to any bid or use date. Refer to the site specific geotechnical investigation report for additional requirements.

B. Prior to placing fill material, remove all organic and other deleterious material from the existing subgrade for a distance of 5' 0" beyond building line, to a depth of 8 inches below final subgrade elevation. Remove additional material as required to place a minimum of 18 inches of structural fill beneath the building slab. All exposed surfaces shall then be thoroughly proof rolled in order to locate and densify any weak compressible zones. Proof rolling operations should be observed by a representative of the geotechnical engineer. Weak or soft areas shall be removed and replaced with suitable select fill in accordance the recommendations noted above.

C. Upon completion of the proof rolling operations and just prior to fill placements the subgrade should be moisture conditioned by scarifying to a minimum depth of 6 inches and re-compacted to a minimum of 98 percent of the maximum dry density as defined by ASTM D 698 (Standard Proctor Test) at a moisture content within -0 to +3 percent above the optimum moisture content until permanently covered.

D. Once the proofrolling operations are complete and documented, place properly compacted, suitable fill materials with the proposed building addition's footprint area up to its FGE above MSL, in 6 inch compacted lifts per FVR Reduction Recommendations section of geotechnical report. Each lift should be compacted, tested, and, documented.

E. Structural select fill shall be placed in loose lifts not exceeding 8 inches in thickness and compacted to at least 98 percent of the maximum dry density as determined by ASTM D698. The moisture content of the fill should be maintained within the range of two percentage points below the optimum moisture content to two percentage points above the optimum moisture content until the final lift of fill is permanently covered.

F. Compaction and moisture content of subgrade and each lift of structural fill shall be inspected and approved by a qualified engineering technician, supervised by a Geotechnical Engineer.

G. Provide a vapor retarder that conforms to ASTM E1745, Class A or better with a maximum water vapor permeance of 0.01 perms per ASTM E154. Vapor retarder shall be no less than 15 mils thick.

H. Building pad preparation information is based on a geotechnical report provided by Raba - Kistner Consultants Inc. dated March 1, 2018, report number AMA18-007-00.

2465 DRILLED PIERS

A. Pier design is based on the following design criteria:

1. Allowable end bearing:	12.0 KSF	20 to less than 35 feet
	9.5 KSF	35 to less than 40 feet
	18.0 KSF	40 to less than 65 feet
2. Side friction:	0.0 KSF	0 to less than 8 feet
	0.40 KSF	8 to less than 15 feet
	0.75 KSF	15 to less than 25 feet
	0.90 KSF	25 to less than 35 feet
	0.75 KSF	35 to less than 40 feet
	1.25 KSF	40 to less than 65 feet
3. Uplift force in kips:	19(D), D in feet	
4. Side friction (uplift resistance):	0.0 KSF	0 to less than 8 feet
	0.25 KSF	8 to less than 15 feet
	0.50 KSF	15 to less than 25 feet
	0.60 KSF	25 to less than 35 feet
	0.50 KSF	35 to less than 40 feet
	0.85 KSF	40 to less than 65 feet

5. Depths shown above are from existing grade. The maximum depth is 65 feet.

B. Pier design is in accordance with the recommendations in the following geotechnical report:

1. Geotechnical engineer:	Raba-Kistner Consultants Inc. (RKCI)
2. Date of report:	March 1, 2018
3. Report number:	AMA18-007-00

C. Piers not specifically located on the plan shall be located on centerline of column above. Where no column occurs, locate on centerline of wall or beam.

D. Provide dowels from piers into concrete above using same bar size and number as shown for pilaster above. Where no pilaster occurs, use dowels of same size and number as pier reinforcing steel. Extend dowels 30 bar diameters into pier and beam, wall, pilaster or column, unless noted otherwise on the Structural Drawings.

E. Elevation of top of piers, unless noted otherwise on the Structural Drawings, is at the bottom of the deepest intersecting beam or wall supported by the pier.

F. Reinforcing cage shall be held securely away from earth at sides and bottom by sets of 3 spacers at a maximum spacing of 8 ft. along the length of the cage and 1'-0" from the bottom.

G. Pier reinforcing and concrete shall be placed immediately after drilling operations are complete; in no case shall a pier be drilled that cannot be placed by the end of the workday.

H. See plans for pier sizes, reinforcing and depth.

2465 DRILLED PIERS

I. The contractor shall verify depths of piers before pier steel is cut. Pier steel may be delivered to the jobsite in standard lengths and cut as required. Provide 64 bar diameter laps in all vertical pier reinforcing.

J. Reinforcing steel shop drawings shall include placing drawings for templates to set dowels in piers.

K. Top of pier shall be of the specified diameter. Form top of pier if required to maintain the specified diameter. Any concrete extending beyond the specified diameter shall be removed.

L. Temporary steel casing may be required during pier drilling operations. Prior to the placement of concrete, any seepage water shall be removed from the pier holes. Special construction procedures in accordance with ACI 336.1 and ACI 336.3R and specifications shall be followed during extraction of the casing and during concrete placement.

M. Contractor shall include in bid documents, unit-costs for casing if required and unit-cost for greater and lesser depth of drilling for each pier size.

N. All piers shall be inspected by a representative of RKCI in order to ensure that the proposed bearing material has been reached in accordance with the recommendations given in the geotechnical report.

O. The contractor shall make and maintain accurate records of the drilled pier depths, bearing stratum, depth of penetration into bearing stratum, diameter and location (including off center eccentricities), and shall submit this information to the Engineer.

P. Construct trial drilled pier of diameter and depth and at location indicated or, if not indicated, of same diameter and depth as drilled piers located at least three diameters clear of permanent drilled piers, to demonstrate installer's construction methods, equipment, standards of workmanship, and tolerances.

3000 CAST-IN-PLACE CONCRETE

A. Structural Concrete Code: Building Code Requirements for Structural Concrete, American Concrete Institute, ACI 318, as referenced by the International Building Code.

B. Classes of Concrete

1. All concrete shall conform to the requirements as specified in the table below, unless noted otherwise on the Structural Drawings:
2. Concrete Mix Schedule:

Conc Class	Strength psi	Agg Type	Max Nom Agg Size	Max w/c	Use
A	4500	NWT	1-1/2"	0.45	Piers with casing
B	4500	NWT	3/4"	0.45	Piers slurry method
C	4500	NWT	3/4"	0.45	Slab on grade
D	4000	NWT	3/4	0.45	Slab on composite metal deck

   a. "NWT" refers to normal concrete having air dry unit weight of approximately 145 PCF (ASTM C33 aggregate).
   b. Where w/c ratio is not indicated in the Concrete Mix Schedule, it shall be as necessary to meet strength requirements.
   c. Where the w/c ratio is shown, it shall be adhered to regardless of strength requirements.
   d. "Strength" is required compressive cylinder strength at an age of 28 days.
   e. "Maximum nominal aggregate size" is defined as the first sieve with greater than 15 cumulative percent retained.
   f. Provide ASTM C150, Type V Portland Cement or equivalent per ACI 201.2R-08 for concrete class A, B, and C, Provide ASTM C150, Type I/II for class D.

3. Mix Usage Schedule:

Description of Use	Concrete Class	Air Content
Drilled Piers (Casing only)	A	-----
Drilled Piers (Slurry Method)	B	-----
Grade Beams	C	3 - 6%
Slab on Metal Deck	D	-----

C. A maximum of 20% by weight of the cementitious materials used in mix designs may be class C or F fly ash.

D. Fly ash shall not be used in architecturally exposed concrete.

E. Provide 4 1/2 percent plus or minus 1 1/2 percent of entrained air in concrete permanently exposed to the weather and elsewhere at the contractor's option.

F. Horizontal construction joints in concrete placements shall be permitted only where indicated on the Structural Drawings. All vertical construction joints shall be made in the center of spans in accordance with the typical details. Contractor shall submit proposed locations for construction joints not shown on the Structural Drawings for review by the Architect and Engineer. Additional construction joints may require additional reinforcing as specified by the Engineer which shall be provided by the contractor at no additional cost to the owner.

G. Embedded conduits, pipes, and sleeves shall meet the requirements of ACI 318, and the following:

1. Conduits and pipes running within a slab, beam, or wall shall not be larger in outside dimension than 1/3 the overall thickness of the slab, wall or beam and shall be located within the middle third of that thickness.
2. Conduits, pipes, and sleeves passing horizontally through a beam shall not be larger in outside dimension than 1/3 the overall depth of the beam and shall be located within the middle third of that depth.
3. Conduits, pipes, and sleeves passing vertically through a beam shall utilize a sleeve not larger in outside dimension than 1/3 the overall width of the beam or 6 inches (whichever is less). The sleeve shall be made of hot dip galvanized schedule 40 steel.
4. Conduits, pipes and sleeves shall not be spaced closer than three diameters or widths on center.

H. Concrete placements shall not exceed 10,000 square feet or 100 linear feet on each side without prior approval by the Engineer for each placement.

I. Concrete sampling for quality assurance: Concrete that is pumped shall be sampled at the point of discharge from the truck for information, including slump; and shall be sampled at the point of placement for acceptance of slump and air content.

J. Submittal: Submit proposed mix designs in accordance with ACI 301, chapter 4.2.3. Each proposed mix design shall be accompanied by a record of past performance or by three laboratory trial mixtures with confirmation tests

muñoz & company
1017 NORTH MAIN SUITE 300
SAN ANTONIO, TEXAS 78212
O. 210.349.1163 F. 210.525.1038
W W W . M U N O Z - C O . C O M

INTELLIGENT ENGINEERING SERVICES
ENGINEERING COMMUNITIES FROM THE GROUND UP
200 S. 10TH STREET, SUITE 1204 MCALLEN, TEXAS 78501
956.682.4649 ie-services.com
IES JOB NO. 318B0027 TBPE FIRM F-482

STATE OF TEXAS
JASON D. IRISH
94227
LICENSED PROFESSIONAL ENGINEER
11-08-18

UTRGV
The University of Texas Rio Grande Valley

UNIVERSITY OF TEXAS RIO GRANDE VALLEY
SCHOOL OF MEDICINE
TEAM BASED LEARNING CENTER
PROJECT NO: 903-1159
EDINBURG, TX
100% CONSTRUCTION DOCUMENTS

Issue/Revision

#	DESCRIPTION	DATE

Sheet Title
STRUCTURAL NOTES

Date
NOVEMBER 08, 2018

Project Number	Drawn By	Checked By
A17021.00	IES STAFF	JDI

Sheet Number
S001

S T R U C T U R A L N O T E S

3200 CONCRETE REINFORCING

A. Concrete reinforcement for the project shall conform to the following:

1. All reinforcing steel shall be new billet steel in accordance ASTM A615, Grade 60, unless noted otherwise in the Structural Drawings or these notes.
2. Welded Reinforcing Steel. Provide reinforcing steel conforming to ASTM A706.
3. Galvanized Reinforcing Steel. Provide reinforcing steel galvanized according to ASTM A767 Class II (2.0 oz. zinc PSF where noted on the drawings.)
4. Deformed Bar Anchors. ASTM A1064 minimum yield strength 70,000 psi as noted on the Structural Drawings. Reinforcing bars shall not be substituted for deformed bar anchors.
5. Welded wire reinforcement. Welded smooth wire reinforcement, ASTM A1064, yield strength 65,000 psi where noted on the Structural Drawings. Welded deformed wire reinforcement, ASTM A497, yield strength 70,000 psi where noted on the Structural Drawings. Welded wire reinforcement to be provided in flat sheets.

B. Detailing of reinforcing steel shall conform to the American Concrete Institute 315 Detailing Manual and all hooks and bends in reinforcing bars shall conform to ACI detailing standards, unless noted otherwise on the Structural Drawings.

C. Welded Wire Reinforcement shall be continuous across the entire concrete surface and not interrupted by beams or girders and properly lapped one cross wire spacing plus 2".

D. Reinforcement in Topping Slabs shall be welded smooth wire reinforcement minimum 6 x 6 W2.9 x W2.9 in all topping slabs unless specified otherwise on the Structural Drawings.

E. Reinforcement in Housekeeping Pads shall be welded smooth wire reinforcement 6 x 6 W2.9 x W2.9 minimum in all housekeeping pads supporting mechanical equipment whether shown on the Structural Drawings or not unless heavier reinforcement is called for on the Structural Drawings.

F. In unscheduled grade beams, walls, and slabs, detail reinforcing as follows:

1. Class A lap beam top reinforcing bars at mid span.
2. Class A lap beam bottom reinforcing bars at the supports.
3. Provide Class B lap at other location pending Engineer's approval.
4. Provide standard hooks in top bars at cantilever and discontinuous ends of beams, walls and slabs.
5. Provide corner bars for all horizontal bars at the inside and outside faces of intersecting beams or walls. Corner bars are not required if horizontal bars are hooked.
6. Provide 2-#4 diagonal bars at all slab re-entrant corners placed under the top mat of steel.

G. Welding of reinforcing steel will not be permitted unless specifically shown on the Structural Drawings.

H. Heat shall not be used in the fabrication or installation of reinforcement.

I. Reinforcing steel clear cover shall be as follows:

1.	Beams	1-1/2" interior, 2" exterior exposure
2.	Drilled Piers	3"
3.	Earth-formed Grade Beams	1-1/2" top, 3" sides, 3" bottom
4.	Formed Grade Beams	1-1/2" top, 2" sides, 3" bottom
5.	Slab-on grade	3/4" top

"Exterior Exposure" refers to concrete exposed to earth or weather.

J. Provide 1 ton of additional reinforcing steel (sizes as directed by the Architect) to be used in the field as directed by the Architect. Labor for placing steel shall be included. Any unused portion of the quantity shall be credited to the owner at the rate of $2600 per ton.

K. Domestic Iron and Steel Certification pursuant to sections 2252.201-2252.205 of the Government Code. The contractor certifies that it is in compliance with the requirement that any iron or steel product produced through a manufacturing process and used in the project is produced in the United States.

4800 STRUCTURAL MASONRY

A. Concrete Masonry: Building Code Requirements for Masonry Structures, American Concrete Institute, ACI 530 & 530.1, as referenced by the International Building Code.

B. Minimum compressive strength of the masonry (f'm) shall be 1,500 pounds per square inch.

C. Mortar shall conform to ASTM C270, Type S. Masonry cement shall not be used.

D. Concrete masonry units shall be hollow load bearing units which conform to ASTM C90, with a minimum net compressive strength as follows:

f'm (psi)	Net area Compressive Strength of CMU Block (psi)
1500	1900

E. Chases shall be built in and not cut in. Chases shall be plumb and shall be minimum oneunit length from jambs of openings. Anchors, wall plugs, accessories and other items to be built in shall be installed as the masonry work progresses. All cutting and fitting of masonry, including that required to accommodate the work of other sections shall be done by masons with masonry saws.

F. Coarse grout shall conform to ASTM C476, with a maximum aggregate size of 1/2" and a minimum compressive strength equal to the specified minimum compressive strength, f'm, but not less than 2000 psi. Course grout shall be placed in accordance with ACI 530.1 Section 3.5.

G. Reinforce concrete masonry unit joints with ladder type hot dip galvanized cold-drawn steel conforming to ANSI/ASTM A82, with (W1.7 or W2.8) side rods with W1.7 cross rods.

1. Space joint reinforcing at 16 inches o.c. unless noted otherwise.
2. Lap joint reinforcing 14 inches at splices.
3. Provide prefabricated joint reinforcing corner pieces at all wall corners and intersections.
4. Joint reinforcing shall be discontinuous at control and expansion joints.

H. Lap reinforcing bars in grouted masonry as noted below. Splices in reinforcing shall be staggered so that not more than 1/2 of all bars are spliced at the same location.

1.	Vertical bars:	60 bar diameters
2.	Bond beams:	40 bar diameters
3.	Lintels:	Do not splice

5050 POST-INSTALLED ANCHORS AND DOWELS

A. Expansion Anchors shall be one of the following:

1. Concrete:
   a. Kwik Bolt TZ, Hilti Inc.
   b. Strong Bolt, Simpson Strong-Tie
   c. Power-Stud+ SD1, DeWalt (Powers)
2. Grouted Masonry:
   a. Kwik Bolt 3, Hilti Inc.
   b. Wedge-All, Simpson Strong-Tie
   c. Power-Stud+ SD1, DeWalt (Powers)

B. Screw Anchors shall be one of the following:

3. Concrete:
   a. Kwik HUS-EZ, Hilti Inc.
   b. Titen HD, Simpson Strong-Tie
   c. Wedge-Bolt+, DeWalt (Powers)
4. Grouted Masonry:
   a. Kwik HUS-EZ, Hilti Inc.
   b. Titen HD, Simpson Strong-Tie
   c. Wedge-Bolt+, DeWalt (Powers)

C. Adhesive Anchors shall be one of the following:

1. Concrete:
   a. HIT-RE 500-V3, Hilti Inc.
   b. HIT-HY200, Hilti Inc.
   c. Pure 110+, DeWalt (Powers)
   d. AC200+, DeWalt (Powers)
4. Grouted Masonry:
   a. HIT-HY 270, Hilti Inc.
   b. SET, Simpson Strong-Tie.
   c. AC100+ Gold, DeWalt (Powers)

D. Adhesive Dowelling:

1. Adhesive dowling system shall be one of the following products:
   a. Hilti "HIT RE 500-V3" epoxy
   b. Pure 110+, DeWalt (Powers)
   c. AC200+, DeWalt (Powers)

5050 POST-INSTALLED ANCHORS AND DOWELS

E. Install dowels in strict accordance with the adhesive manufacturer's instructions.

F. Clean out holes with compressed air after drilling per manufacturer's printed installation instructions or use manufacturer's alternate hole cleaning procedures.

G. Unless noted otherwise on the structural drawings, embedment depth shall be as required to develop full yield strength of the embedded dowels.

H. Prior to drilling holes for dowels, locate existing reinforcing steel with a Pachometer (R-Meter) or by drilling ¼ inch diameter pilot holes. Relocate bolt holes as required to avoid existing reinforcement.

I. Anchors and dowels of the size and embedment shown on the Drawings shall be installed in accordance with the Contract Documents, the manufacturer's recommendations, and the manufacturer's current ICC ES report for the anchor. If conflicts exist between these referenced documents, the most stringent requirements shall govern.

J. The Contractor shall locate all existing reinforcing steel and other embedded items contained in the concrete using non-destructive methods and shall position anchor locations to avoid conflicts with existing embedded items. Anchor locations can be adjusted by a maximum of 1 ½ inch from detailed locations to avoid conflicts, unless noted otherwise. Submit an as-built of anchor locations to engineer.

K. Based on field verified locations of reinforcing steel and embedded items, the Contractor shall create templates for each anchor group. Submit template dimensions for review prior to fabrication of connection plates.

L. Holes for anchors and dowels shall be drilled in a continuous operation using the bit type and size recommended by the anchor manufacturer. Diamond cored holes shall not be used unless noted otherwise on the structural drawings. Holes shall be drilled perpendicular to the concrete surface and shall not be enlarged or redirected at any point along its length. All debris shall be blown out of the holes with compressed air after drilling.

M. All abandoned holes shall be filled with non-shrink grout.

N. Holes in connection plates shall be no more than 1/16 inch larger than the anchor diameter. If larger holes are required for erection purposes, Contractor shall notify Engineer such that a plate washer size can be provided.

O. Installation of anchors and dowels shall be continuously inspected by the testing agency to ensure that holes are of specified size, and that bolts are properly installed including application of minimum installation torques.

5100 STRUCTURAL STEEL

A. Structural Steel Code: Specification for Structural Steel Buildings, American Institute of Steel Construction Inc., ANSI/AISC 360-10, as referenced by the International Building Code.

B. Material

1. All hot rolled steel members shall be new and conform to ASTM specification A6.
2. ASTM Specification and Grade. Clearly mark the grade on each member
3. Unless Noted otherwise on the Structural Drawings, structural steel members shall be:
   a. W-shapes shall conform to ASTM A992.
   b. Channels shall conform to ASTM A36.
   c. Angles shall conform to ASTM A36.
   d. Steel pipe shall conform to ASTM A53, Type E, Grade B.
   e. Round hollow structural shape members shall conform to ASTM A500, Grade C, Fy = 46 ksi.
   f. Square or rectangular hollow structural shape members shall conform to ASTM A500 Grade C, Fy = 50 ksi.
   g. Structural steel plate shall conform to ASTM A36.
   h. Headed stud shear connectors shall conform to ASTM A108.
   i. Deformed bar anchors shall conform to ASTM A1064.
   j. Welded reinforcing steel shall conform to ASTM A706.
   k. Any other steel shall conform to ASTM A36.

C. Fabrication

1. Splicing of structural steel members is prohibited without prior approval of the Engineer as to location and type of splice to be made. Any member having splice(s) not shown and detailed on shop drawings will be rejected.
2. Dimensional tolerances of fabricated structural steel shall conform to Section 6.4 of the AISC Code of Standard Practice unless noted otherwise on the Structural Drawings.
3. Shop painting: Paint structural steel with one coat of manufacturer's standard red oxide primer applied at a rate to provide a uniform dry film thickness of 2.5 mils.

D. Erection

1. Erection tolerances of anchor bolts, embedded items, and all structural steel unless specified otherwise on the Structural Drawings shall conform to the AISC Code of Standard Practice.
2. Field cutting of structural steel or any field modifications to structural steel shall not be made without prior approval of the Engineer.
3. Contractor shall protect any unprimed structural steel from detrimental effects of corrosion, as required, until the steel is enclosed and protected by the new construction.

E. Hot dip galvanize after fabrication all structural steel items and connections permanently exposed to the weather, whether specified on the Structural Drawings or not. Such items include, but are not limited to:

1. Shelf angles and/or loose lintels
2. Parapet wall supporting members penetrating damproofing and/or roofing material
3. Embedded plates in concrete exposed to the exterior
4. Building cladding support steel in space not air conditioned and/or exposed to moisture outside the exterior waterproofing surface if any.
5. Railing exposed to weather.
6. Examine the Architectural and Structural Drawings for other items required to be hot dip galvanized. Galvanize all nuts, bolts, and washers used in connection with such steel. Field welded connections shall have welds protected with "Z.R.C. Cold Galvanizing Compound" as manufactured by Z.R.C. Company.

F. Contractor shall coordinate structural steel fireproofing requirements. All interior structural steel, including steel joists, scheduled or indicated to receive spray applied fireproofing shall be delivered to the project site unprimed. Steel exposed to corrosive conditions after installation shall be primed with a protective coating which does not diminish the bond between the spray applied fireproofing, and the steel substrate. Any primer, and/or coating applied to structural steel shall be approved for use in the applicable U.L. Fire Resistance Assembly used on the project.

G. Provide 1 ton of additional structural steel (sizes as directed by the Architect) to be used in the field as directed by the Architect. Labor for placing steel shall be included. Any unused portion of the quantity shall be credited to the owner at the rate of $3000 per ton.

H. Domestic Iron and Steel Certification. Pursuant to Sections 2252.201-2252.205 of the Government Code, the Contractor certifies that it is in compliance with the requirement that any iron or steel product produced through a manufacturing process and used in the Project is produced in the United States.

5110 STRUCTURAL STEEL CONNECTIONS

A. Welded Connections

1. All welding shall conform to ANSI/AWS D1.1, latest edition.
2. Fillet welds with no size specified shall be 3/16 inch or minimum size required by AISC, whichever is larger.

B. Bolted connections

1. Unless noted otherwise on the Structural Drawings, bolts shall be 3/4 inch diameter and conform to ASTM F3125 Grade A325. Bolts shall be designed using values for bearing type bolts with thread allowed in the shear plane.
2. Bolts shall be tightened to "snug tight" as defined by AISC, unless noted otherwise on the Structural Drawings.
3. Bolts noted as "Slip Critical" throughout the documents shall be tightened to the Minimum Pre-tensioned amounts according to Section J of the AISC specification using one of the following methods: Turn-of-the-nut Method, Calibrated Torque Wrench, Twist-off Type Tension Control, or Direct Tension Indicators.

5110 STRUCTURAL STEEL CONNECTIONS

C. Structural steel connections not specifically detailed on the Structural Drawings shall be designed and detailed by the Contractor under the direct supervision of a Professional Engineer licensed in the State of Texas. Sealed calculations for all connections designed by the Contractor shall be submitted for the Architect's files.

D. Beam connections shall be designed and detailed as follows, unless noted otherwise on the Structural Drawings:

1. Connections shall be AISC simple framing connections. Shear tab connections shall not be used unless specifically detailed on the Structural Drawings, or connections are designed and detailed by the fabricator's Professional Engineer licensed in the State of Texas and sealed calculations are submitted.

E. In general, shop connections shall be bolted or welded and field connections shall be bolted.

F. Where indicated, connections shall be designed for the forces specifically provided. The shear force is indicated on the Structural Drawings as "_K ". Tension is indicated as "T = _ ". Compression is indicated as "C = _". Horizontal shear is indicated as "H = _ ". Torsion is indicated as "TOR = _ ".

G. If not indicated on the Structural Drawings, connections shall be designed for 55 percent of the total load capacity for the beam span shown in the beam tables in the AISC Manual, fourteenth edition.

H. Short slotted holes shall be permitted provided washers are installed in accordance with AISC requirements. Washers shall be hardened where grade A325 bolts are utilized.

I. Wind brace and truss connections shall be designed and detailed as follows, unless noted otherwise on the Structural Drawings:

1. Connections shall be welded.
2. Connections shall be designed and detailed by the fabricator's Professional Engineer licensed in the State of Texas for the forces shown on the Structural Drawings.
3. If forces are not indicated on the Structural Drawings, connections shall be designed to develop the full tensile capacity of the members.

J. Moment Connections

1. Where indicated, moment connections shall be designed for the scheduled moment envelope. The moment is indicated on the Structural Drawings as "(M =)".
2. If not indicated on the Structural Drawings, moment connections shall be welded to develop the full capacity of the member.
3. All welds denoted as moment connection or complete joint penetration (CJP) weld shall be ultrasonically or x-ray certified by an independent testing agency.

K. All beam shears, reactions, member forces, moments, etc. shown on the Structural Drawings are factored loads conforming to the requirements of AISC Load and Resistance Factor Design (LRFD).

L. Roof edge angles shall be continuous and shall be spliced only at supports. Splices shall be butt welded to develop full capacity of the member.

M. Base Plates

1. Column base plates shall be set to the elevation indicated on the Structural Drawings and leveled using shims or by double nuts on anchor bolts. Base plates shall then be grouted with a non-shrink, high strength nonmetallic grout. Tighten anchor bolts after supported members have been positioned and plumbed.
2. Hole sizes in base plates shall be oversized per AISC section J3.2. Hole sizes may be increased to the recommended maximum size listed for anchor rods in base plate table 14-2 of the 14th edition of the AISC Steel Construction Manual provided that plate washers, as required by this table, are utilized.
3. Anchor rods shall be:
   a. Typical: ASTM F1554 Gr. 36.
   b. High Strength: ASTM F1554, Gr. 55, weldable.

N. For connections not specifically addressed by these notes or the Structural Drawings, provide fillet welds at all contact surfaces sufficient to develop the tensile strength of the smaller member at the joint.

5210 OPEN WEB JOISTS AND JOIST GIRDERS

A. Open web steel joists shall conform to the Standard Specifications of the Steel Joist Institute (SJI). Chords of joists and joist girders shall be angles or tees.

B. Provide bridging in accordance with SJI Specifications and OSHA Standard 29 CFR-1926.757(C). Bridging shall be continuous through structural steel members, and shall be anchored to spandrel members or walls. Provide additional bridging where required for uplift.

C. See wind load plans for joist design wind pressures.

D. Joist manufacturer shall design chords of joists to support a nominal concentrically-applied load of 100 pounds between all panel points without requiring additional reinforcing. This additional load has been accounted for in the overall design loads and is not additive to those specified.

E. All hangers or attachments to joists shall be placed concentric with the top and bottom chord(s). Hangers with reactions in excess of 100 pounds must be located at the panel points of the joist, or the chord(s) shall be reinforced in accordance with the "Typical Details."

F. Provide flat bearing for all joists. Bear joists and joist girders on supports in accordance with SJI Specifications.

G. Joists shall be connected to their supports in accordance with SJI Specifications and as indicated by the joist manufacturer.

H. Shop painting: Joists and joist girders shall receive a shop-coat of the joist manufacturer's standard rust inhibitive primer conforming to the Steel Structures Painting Council Specification, SSPC No. 15, or better.

I. Submittals: Submit shop drawings including setting plans and shop tickets indicating standard designations, bridging, camber, material strengths, spacing, joist seat extensions and connection details. Submit calculations for all joists and joist girders for which standard load tables are not applicable. Calculations shall be signed and sealed by a Professional Engineer licensed in the State of Texas. Calculations will be retained for the Architects file and shall not be approved or returned.

5311 METAL DECKS

A. Composite metal deck and concrete slab

1. Composite metal deck shall be:

Location	Deck Depth	Gauge	Concrete Type	Total Thickness	Fy (ksi)
Floor	2"	18	NWT	4.5	50

2. Sheet steel for composite deck and accessories shall conform to ASTM A653 Structural Quality. Galvanizing shall conform to ASTM A924 with a minimum coating class of G60 as defined in ASTM A653.
4. Deck shall be constructed in a three-span condition so as not to require any intermediate shoring to support construction loads and wet concrete, unless noted otherwise on the Structural Drawings. Deck that are constructed in less than a three-span condition shall be shored as needed.
5. Reinforce the slab over the composite deck with 6x6-W2.9xW2.9 welded wire mesh chaired to be located 3/4" below the top of the slab. Provide a 6'-0" wide extra layer of mesh over all interior beams and girders spanning parallel to the deck span.
6. Metal edge forms shall be 14 gauge cold formed steel with 1/2" return lip. Weld edge form to supporting beams at 12" spacing, unless noted otherwise on the Structural Drawings.
7. Slabs over composite deck shall be placed and finished to provide a floor within specified tolerances. Slab thicknesses may vary away from the columns due to deflections of the beams and deck.
8. Headed studs shall be 3/4" diameter x 4" long, unless noted otherwise on the Structural Drawings.
9. Install deck ends over supporting frame with a minimum end bearing of 1-1/2 inches.

5311 METAL DECKS

10. Fasten floor deck panels to steel supporting members by arc spot (puddle) welds of the surface diameter indicated and as follows:

   a. Weld Diameter: 5/8-inch nominal.
   b. If minimum uncoated steel deck thickness is less than 0.028 inch, install weld washers at each weld location.
   c. Weld edge ribs of panels at each support. Space additional welds an average of 12 inches apart, but not more than 18 inches apart.
   d. Fasten side laps and perimeter edges of panels between supports, at intervals not exceeding the lesser of 1/2 of the span or 36 inches.
   e. Mechanically fasten with self-drilling No.10 diameter or larger carbon-steel screws.
   f. Fasten with a minimum of 1-1/2-inch long welds.
   g. Do not use admixtures with chloride salts in concrete for slabs over metal deck.

B. Metal Roof Deck

1. Metal Roof Deck Schedule:

Location	Gauge	SDI Deck Type	Deck Depth (in.)	Sheet Width (in.)	Min. Ix (in.^{4})	Min. Sp (in.^{3})	Min. Sn (in.^{3})
Typ. U.N.O.	22	WR	1.5	36	0.169	0.186	0.194
Canopy/Elevator	18	WR	1.5	36	0.242	0.310	0.321

Sp = positive section modulus in^3
Sn = negative section modulus in^3
Ix = moment of inertia

5. Roof deck shall be galvanized.
6. Sheet steel for galvanized roof deck and accessories shall conform to ASTM A653, Structural Steel, with a minimum yield strength of 33 ksi and a maximum yield strength of 80 ksi. Galvanizing shall conform to ASTM A653 with a minimum coating of G60 as defined in A653.
7. Roof deck shall be continuous over four or more supports.
8. Place deck panels on structural supports and adjust to final position with ends lapped 2 inches over structural supports. Provide minimum end bearing of 2 inches.
9. Roof deck connections shall be as follows:

Location	Support Connx Pattern	Support Fastener	Sidelap Fastener/ No. per Span, Typical
Zone 1	36/5	5/8" PW	#10 Tek/ 5
Zone 2	36/7	5/8" PW	#10 Tek/ 5
Zone 3	36/7	5/8" PW	#10 Tek/ 5

   a. See the Design Wind Load plans on sheet S005 for locations and magnitudes of Zone 1, Zone 2, and Zone 3 roof wind loads.
   b. PW = Puddle Weld

10. Power driven fasteners shall be selected by the Contractor for the combinations of deck gauge and deck support member thickness. Submit proposed fasteners with complete manufacturer's information, including diaphragm shear values for the Engineer to review.
   a. Power driven fasteners shall not be used where the deck support member thickness is less than 1/8 inch (10 gauge) unless permitted by applicable fastener test report, to be submitted for review by the Engineer.
11. Puddle welds not otherwise sized shall be 5/8" minimum diameter and shall be made through weld washers for decking lighter than 22 gauge. Weld washers shall be a minimum thickness of 0.050 inches and have a nominal 3/8 inch diameter hole. Weld washers shall not be used between supports along the sidelaps.
12. Accessories shall be attached to supporting structure or deck using mechanical fasteners or welds at a spacing not to exceed 12 inches on center.
13. Mechanical, electrical and plumbing systems shall not be supported by the metal roof deck.

D. Submittal: Submit deck layout plans and details indicating deck type, fastening methods and layout, support locations, projections, openings and reinforcement, and any other pertinent details and accessories.

E. Roof deck connections shall withstand the uplift pressures shown on the roof wind uplift plan.

101000 DEFERRED SUBMITTALS

A. In accordance with the International Building Code, Section 107.3.4.1, the following submittals will not be issued at the time of permit application, and will be "deferred" to a later date. Deferred submittals are required to be submitted to the Building Official. However, these submittals shall be submitted and approved by the Registered Design Professional in Responsible Charge (RDPIRC) prior to submitting to the Building Official. Deferred submittals are design items being delegated to the Contractor which shall be designed and sealed by a Professional Engineer licensed in the State of Texas.

B. The following structural components shall be treated as deferred submittals:

1. Steel Connections
2. Steel Joists and Joist Girders
3. Metal Stairs
4. Metal Ladders
5. Guardrail and Handrail Systems
6. Cold Formed Metal Framing
7. Curtainwall Systems
8. Pre-Fabricated Awnings and Canopies
9. Elevator Guide Rails

C. Design of the items listed above shall be in accordance with the International Building Code, and shall include all attachments to the structure.

D. Work associated with Deferred Submittals shall not be performed until the deferred submittal documents have been approved by the Building Official.

E. Refer to the Contract Documents for additional Deferred Submittal items.

muñoz & company
1017 NORTH MAIN SUITE 300
SAN ANTONIO, TEXAS 78212
O. 210.349.1163 F. 210.525.1038
W W W . M U N O Z - C O . C O M

INTELLIGENT ENGINEERING SERVICES
ENGINEERING COMMUNITIES FROM THE GROUND UP
200 S. 10TH STREET, SUITE 1204 McALLEN, TEXAS 78501
956.682.4645 ie-services.com
IES JOB NO: 3180027 TBPE FIRM F-482

STATE OF TEXAS
JASON D. IRISH
94227
LICENSED
PROFESSIONAL ENGINEER

11-08-18

UTRGV
The University of Texas Rio Grande Valley

UNIVERSITY OF TEXAS RIO GRANDE VALLEY
SCHOOL OF MEDICINE
TEAM BASED LEARNING CENTER
PROJECT NO: 903-1159
EDINBURG, TX
100% CONSTRUCTION DOCUMENTS

Issue/Revision

#	DESCRIPTION	DATE

Sheet Title
STRUCTURAL NOTES

Date
NOVEMBER 08, 2018

Project Number	Drawn By	Checked By
A17021.00	IES STAFF	JDI

Sheet Number
S002

STRUCTURAL ABBREVIATIONS

A/C -	AIR CONDITIONER
AB -	ANCHOR BOLT
ABV -	ABOVE
ACI -	AMERICAN CONCRETE INSTITUTE
ADDL -	ADDITIONAL
ADH -	ADHESIVE
ADJ -	ADJACENT
AEC -	ARCHITECTURALLY EXPOSED CONCRETE
AESS -	ARCHITECTURALLY EXPOSED STRUCTURAL STEEL
AFF -	ABOVE FINISHED FLOOR
AGGR -	AGGREGATE
AHU -	AIR HANDLING UNIT
AISC -	AMERICAN OF STELL CONSTRUCTION
ALT -	ALTERNATE
APPD -	APPROVED
APPROX -	APPROXIMATE
ARCH -	ARCHITECT (OR) ARCHITECTURAL
BD -	BOARD
B.O. -	BOTTOM OF
BF -	BACK FACE
BFF -	BELOW FINISH FLOOR
BIL -	BOTTOM INSIDE LAYER
BL -	BUILDING LINE
BLDG -	BUILDING
BLK -	BLOCK
BLKG -	BLOCKING
BM -	BEAM
BOL -	BOTTOM OUTSIDE LAYER
BOS -	BOTTOM OF STEEL
BOTT -	BOTTOM
BP -	BASE PLATE
BRDG -	BRIDGING
BRG -	BEARING
BRKT -	BRACKET
BRL -	BRICKLEDGE
BSMT -	BASEMENT
B TO B -	BACK TO BACK
BTWN -	BETWEEN
C -	CAMBER (OR) COMPRESSION
CANT -	CANTILEVER
CFS -	COLD FORMED STEEL
CG -	CENTER OF GRAVITY
CGS -	CENTER OF GRAVITY OF STRAND
CIP -	CAST-IN-PLACE
CJ -	CONTROL JOINT
CJP -	COMPLETE JOINT PENETRATION
CL -	CENTER LINE
CLG -	CEILING
CLR -	CLEAR (OR) CLEARANCE
CMU -	CONCRETE MASONRY UNIT
COL -	COLUMN
C OR COMP -	COMPRESSION
CONC -	CONCRETE
CONN(S) -	CONNECTION(S)
CONST -	CONSTRUCTION
CONST JT -	CONSTRUCTION JOINT
CONT -	CONTINOUS
CONTR -	CONTRACTOR
COORD -	COORDINATE
CTSK -	COUNTER SINK
CVR -	COVER
DBA -	DEFORMED BAR ANCHORS
DBL -	DOUBLE
DE	DECK EDGE
DEV -	DEVELOPMENT
DFL -	DOUGLAS FIR LARCH
DIA -	DIAMETER
DIAG -	DIAGONAL
DIM(S) -	DIMENSION(S)
DKG -	DECKING
DL -	DEAD LOAD
DN -	DOWN
DS -	DOWNSPOUT
DTL -	DETAIL
DVTL -	DOVETAIL
DWG(S) -	DRAWING(S)
DWL(S) -	DOWELS
EA -	EACH
EF -	EACH FACE (OR) EXHAUST FAN
EJ -	EXPANSION JOINT
EL -	ELEVATION
ELEC -	ELECTRICAL
ELEV -	ELEVATOR
EMBED -	EMBEDMENT
ENGR -	ENGINEER
EOR -	ENGINER OF RECORD
EQ -	EQUAL (OR) EQUIVALENT
EQUIP -	EQUIPMENT
EW -	EACH WAY
EXIST -	EXISTING
EXP -	EXPANSION
EXT	EXTERIOR
EXTN -	EXTENSION
F TO F -	FACE TO FACE
FABR -	FABRICATOR
FD -	FLOOR DRAIN
FDN -	FOUNDATION
FFE -	FINISHED FLOOR ELEVATION
FIN -	FINSH (OR) FINISHED
FIN FL -	FINISHED FLOOR
FL -	FLOOR
FLG -	FLANGE
FP -	FIREPROOF(ING)
FRMG -	FRAMING
FS -	FAR SIDE
FT -	FOOT (OR) FEET
FTG -	FOOTING
FV -	FIELD VERIFY
GA -	GAGE (OR) GAUGE
GALV -	GALVANIZED
GC -	GENERAL CONTRATOR
GR -	GRADE
GR BM -	GRADE BEAM
HB -	HORIZONTAL BRACE
HCA -	HEADED CONCRETE ANCHOR
HDG -	HOT DIPPED GALVANIZED
HDR -	HEADER
HI -	HIGH
HK -	HOOK
HL -	HOLE
HORIZ -	HORIZONTAL
HP -	HIGH POINT
HS -	HEADED STUD
HSS -	HOLLOW STRUCTURAL SECTION
HT -	HEIGHT
ID -	INSIDE DIAMETER
IF -	INSIDE FACE
IN -	INCH
INFO -	INFORMATION
INT -	INTERIOR
INTERM -	INTERMEDIATE
JG -	JOIST GIRDER
JST(S)	JOIST(S)
JT -	JOINT
K -	KIPS (1000 LBS)
KLF -	KIP PER LINEAR FOOT
KSF -	KIP PER SQUARE FOOT
KSI -	KIP PER SQUARE INCH
L -	LENGTH
LBS -	POUNDS
LL -	LIVE LOAD
LLH -	LONG LEG HORIZONTAL
LLV -	LONG LEG VERTICAL
LO -	LOW
LOC -	LOCATION
LONG -	LONGITUDINAL
LP -	LOW POINT
LSH -	LONG SIDE HORIZONTAL
LSL -	LONG SLOTTED HOLES
LSV -	LONG SIDE VERTICAL
LW -	LIGHTWEIGHT
LWC -	LIGHTWEIGHT CONCRETE
M -	MOMENT
MAS -	MASONRY
MATL -	MATERIAL
MAX -	MAXIMUM
MC -	MOMENT CONNECTION(S)
MECH -	MECHANICAL
MEP -	MECHANICAL, ELECTRICAL, PLUMBING
MEZZ -	MEZZANINE
MFR -	MANUFACTURER
MID -	MIDDLE
MIN -	MINIMUM
MISC -	MISCELLANEOUS
MTL -	METAL
NF -	NEAR FACE
NIC -	NOT IN CONTRACT
NOM -	NOMINAL
NS -	NON-SHRINK
NTS -	NOT TO SCALE
OC -	ON CENTER
OCEW -	ON CENTER EACH WAY
OD -	OUTSIDE DIAMETER (OR) OVERFLOW DRAIN
OF -	OUTFACE FACE
OH -	OPPOSITE HAND
OPNG(S) -	OPENING(S)
OPP -	OPPOSITE
OVS -	OVER-SIZED HOLE
P -	PAN
P/C -	PRECAST CONCRETE
P/E -	PRE-ENGINEERED
PAF -	POWDER ACTUATED FASTENER
PAR -	PARALLEL
PC -	PIECE
PCF -	POUNDS PER CUBIC FOOT
PEMB -	PRE-ENGINEERED METAL BUILDING
PERP -	PERPENDICULAR
PI -	PLASTICITY INDEX
PJ -	PANEL JOINT
PJP -	PARTIAL JOINT PENETRATION
PL -	PLATE
PLF -	POUNDS PER LINEAR FOOT
PLYWD -	PLYWOOD
PREFAB -	PREFABRICATED
PRELIM -	PRELIMINARY
PROJ -	PROJECTION
PSF -	POUNDS PER SQUARE FOOT
PSI -	POUNDS PER SQUARE INCH
PT -	POINT (OR) PRESSURE TREATED
P-T -	POST-TENSION(ED)
QTY -	QUANTITY
R -	RADIUS (OR) REACTION (OR) REMAINDER
RCP -	REINFORCED CONCRETE PIPE
RD -	ROOF DRAIN
REINF -	REINFORCE(ING)/ED)(MENT)
REQ -	REQUIRE(MENT)
REQD -	REQUIRED
RET -	RETAINING
RET SYS -	RETENTION SYSTEM
RF -	ROOF
RIS -	RISER
RM -	ROOM
RND -	ROUND
RO -	ROUGH OPENING
RTU -	ROOF TOP UNIT
SCHED -	SCHEDULE(D)
SECT -	SECTION
SF -	SQUARE FOOT
SHT -	SHEET
SHTG -	SHEATHING
SIM -	SIMILAR
SJI -	STEEL JOIST INSTITUTE
SL -	SLOPE
SOG -	SLAB ON GRADE
SP -	SOUTHERN PINE
SPA -	SPACE
SPECD -	SPECIFIED
SPEC(S) -	SPECIFICATION(S)
SQ -	SQUARE
SS -	STAINLESS STEEL
SSL -	SHORT SLOTTED HOLE
STAGG -	STAGGERED
STD -	STANDARD
STIFF -	STIFFENER
STRR -	STIRRUPS
STL -	STEEL
STR -	STRAIGHT
STRUCT -	STRUCTURE (OR) STRUCTURAL
SUBCONTR -	SUBCONTRACTOR
SUPT(S) -	SUPPORT(S)
SW -	SHEARWALL (OR) SIDEWALK
T -	TENSION
T.O. -	TOP OF
TAB -	TOP AND BOTTOM
T&G -	TONGUE AND GROOVE
TEMP -	TEMPERATURE
TERR -	TERRAZZO
THK -	THICK
THRD -	THREAD(ED)
TIL -	TOP INSIDE LAYER
TOB -	TOP OF BEAM
TOC -	TOP OF CONCRETE
TOF -	TOP OF FOOTING
TOJ -	TOP OF JOIST
TOL -	TOP OUTSIDE LAYER
TOP -	TOP OF PIER
TOPC -	TOP OF PIER (PILE) CAP
TOS -	TOP OF STEEL
TOW -	TOP OF WALL
TOR-	TORSION
TR -	TREAD
TRANSV -	TRANSVERSE
TYP -	TYPICAL
UNO -	UNLESS NOTED OTHERWISE
V -	SHEAR
VB -	VERTICAL BRACE
VERT -	VERTICAL
W -	WIDTH
W/ -	WITH
W/O -	WITHOUT
WD -	WOOD
WDW -	WINDOW
WL -	WIND LOAD
WP -	WORK POINT
WPTG -	WATERPROOFING
WS -	WATERSTOP
WT -	WEIGHT
WWM -	WELDED WIRE MESH
X-STR -	EXTRA STRONG
XX-STR -	DOUBLE EXTRA STRONG

SYMBOLS LEGEND

SYMBOL	DESCRIPTION
PIER TYPE, T.O PIER EL, T.O PER DETAIL	CONCRETE PIER
BEAM SIZE, XXXXXX (X) C=X" STUDS, R=XX, NUMBER OF HEADED, REACTION (SERVICE LOAD), CAMBER	COMPOSITE STEEL BEAM
MOMENT CONNECTION, BEAM SIZE, XXXXXX, MOMENT CONNECTION	STEEL BEAM MOMENT CONNECTION
COLUMN SIZE, BASE PLATE TYPE	STEEL COLUMN
C1	CONCRETE COLUMN
#	NEW COLUMN GRID
#	EXISTING COLUMN GRID
	WELDED METAL BAR GRATING
	SLAB OR DECK SPAN DIRECTION
	DROP IN SLAB OR DECK
	DROP AND SLOPE IN SLAB OR DECK
	SLOPE IN SLAB OR DECK
BRACE-x	VERTICAL STEEL BRACE
	STEEL BEAM SPLICE
*	HEAVY STEEL CONNECTION
#	STUDRAIL
10P, 15P, 20P, 30P, 53P, 66P	STANDARD PAN WIDTH
xxSP	SKIP PAN, xx WIDTH
	MASONRY WALL
	WINDOW IN MASONRY WALL
	DOOR IN MASONRY WALL
	NONLOAD-BEARING WALL
SW-x	SHEARWALL, SEE SCHEDULE
	LOAD-BEARING WALL, SEE SCHEDULE
SW-x	CONCRETE SHEAR WALL, SEE SCHEDULE
	EXISTING CONSTRUCTION
	MISCELLANEOUS, SEE PLAN
	ROOF TOP UNIT (RTU)

muñoz & company
1017 NORTH MAIN SUITE 300
SAN ANTONIO, TEXAS 78212
O. 210.349.1163 F. 210.525.1038
W W W . M U N O Z - C O . C O M

INTELLIGENT ENGINEERING SERVICES
ENGINEERING COMMUNITIES FROM THE GROUND UP
200 S. 10TH STREET, SUITE 1204 McALLEN, TEXAS 78501
956.682.4645 ie-services.com
IES JOB NO.:3180027 TBPE FIRM F-432

STATE OF TEXAS
JASON D. IRISH
94227
LICENSED
PROFESSIONAL ENGINEER

11-08-18

UTRGV
The University of Texas Rio Grande Valley

UNIVERSITY OF TEXAS RIO GRANDE VALLEY
SCHOOL OF MEDICINE
TEAM BASED LEARNING CENTER
PROJECT NO: 903-1159
EDINBURG, TX
100% CONSTRUCTION DOCUMENTS

Issue/Revision

#	DESCRIPTION	DATE

Sheet Title
ABBREVIATIONS & SYMBOLS LEGEND

Date
NOVEMBER 08, 2018

Project Number	Drawn By	Checked By
A17021.00	IES STAFF	JDI

Sheet Number
S003

SPECIAL INSPECTIONS TABLES FOR STRUCTURAL ELEMENTS - 2015

SPECIAL INSPECTIONS

1. Special Inspections shall be performed in accordance with Chapter 17 of the 2015 International Building Code (IBC) by a Special Inspector hired by the Owner to perform the Special Inspections listed below. The Special Inspector shall be qualified by an approved agency according to the City's building official to perform the special inspections for which they will be undertaking. The Contractor shall coordinate with and notify the Special Inspector of all tests. The Special Inspector shall be responsible to verify that the items detailed in the Construction Documents were built accordingly and shall prepare, sign, and furnish inspection reports to the building official and the Architect for all time spent at the site. The Inspector shall bring discrepancies to the immediate attention of the General Contractor for correction. If the discrepancies are not corrected, the discrepancies shall be brought to the attention of the building official and to the Architect prior to the completion of that phase of the work. These special inspections are in addition to the other inspections listed in these Structural Notes or Project Specifications.

2. Where structural members and assemblies are shop fabricated, the Special Inspector shall verify that the fabricator maintains detailed fabrication and quality control procedures that provide a basis for inspection control of the workmanship and the fabricator's ability to conform to the Construction Documents and Referenced Standards, unless the fabricator is registered and approved to perform such work without special inspection

VERIFICATION AND INSPECTION TASKS FOR WELDING OF STRUCTURAL STEEL[1] (AISC 360-10 Table N5.4)

VERIFICATION AND INSPECTION	INSPECTION FREQUENCY		REFERENCED STANDARD	IBC REFERENCE
	CONTINUOUS	PERIODIC		
1. Inspection tasks prior to welding:			AISC 360-10 N5.4-1; AWS D1.1	1705.2.1
a. Welding procedure specifications (WPSs) available	X	--		
b. Manufacturer certifications for welding consumables available	X	--		
c. Material identification (type/grade)[2]	--	X		
d. Welder identification system[2]	--	X		
e. Fit-up of groove welds (including joint geometry)[2] 1) Joint preparation 2) Dimensions (alignment, root opening, root face, bevel) 3) Cleanliness (condition of steel surfaces) 4) Tacking (tack weld quality and location) 5) Backing type and fit (if applicable)	--	X		
f. Configuration and finish of access holes[2]	--	X		
g. Fit-up of fillet welds[2] 1) Dimensions (alignment, gaps at root) 2) Cleanliness (condition of steel surfaces) 3) Tacking (tack weld quality and location)	--	X		
2. Inspection tasks during welding:			AISC 360-10 N5.4-2; AWS D1.1	1705.2.1
a. Use of qualified welders	--	X		
b. Control and handling of welding consumables[2] 1) Packaging 2) Exposure control	--	X		
c. No welding over cracked tack welds[2]	--	X		
d. Environmental conditions[2] 1) Wind speed within limits 2) Precipitation and temperature	--	X		
e. WPS followed[2] 1) Settings on weld equipment 2) Travel speed 3) Selected welding materials 4) Shielding gas type/flow rate 5) Preheat applied 6) Interpass temperature maintained (min/max) 7) Proper position (F, V, H, OH)	--	X		
f. Welding techniques[2] 1) Interpass and final cleaning 2) Each pass within profile limitations 3) Each pass meets quality requirements	--	X		
3. Inspection tasks after welding:			AISC 360-10 N5.4-2; AWS D1.1	1705.2.1
a. Welds cleaned	--	X		
b. Size, length and location of welds	X	--		
c. Welds meet visual acceptance criteria 1) Crack prohibition 2) Weld/base-metal fusion 3) Crater cross section 4) Weld profiles 5) Weld size 6) Undercut 7) Porosity	X	--		
d. Arc strikes	X	--		
e. k-area[3]	X	--		
f. Backing removed and weld tabs removed (if required)	X	--		
g. Repair activities	X	--		
h. Document acceptance or rejection of welded joint or member	X	--		

1. Inspection tasks noted in this table are the responsibility of the Special Inspector or Quality Assurance Inspector (QAI). The fabricator and erector are responsible for all inspection tasks indicated in AISC 360-10 Section N5 assigned to the Quality Control Inspector (QCI).

2. Inspection tasks may be coordinated with the fabricator or erector's Quality Control Inspector (QCI) where indicated with this footnote. All other tasks shall be performed by the Special Inspector.

3. When welding of doubler plates, continuity plates or stiffeners has been performed in the k-area, visually inspect the web k-area for cracks within 3 in. (75 mm) of the weld.

VERIFICATION AND INSPECTION TASKS FOR BOLTING STRUCTURAL STEEL[1] (AISC 360-10 Tables N5.6)

VERIFICATION AND INSPECTION	INSPECTION FREQUENCY		REFERENCED STANDARD	IBC REFERENCE
	CONTINUOUS	PERIODIC		
1. Inspection tasks prior to bolting:			AISC 360-10 N5.6-1	1705.2.1
a. Manufacturer's certifications available for fastener materials	X	--		
b. Fasteners marked in accordance with ASTM requirements	--	X		
c. Proper fasteners selected for the joint detail (grade, type, bolt length if threads are to be excluded from shear plane)[2]	--	X		
d. Proper bolting procedure selected for joint detail[2]	--	X		
e. Connecting elements, including the appropriate faying surface condition and hole preparation, if specified, meet applicable requirements	--	X		
f. Pre-installation verification testing by installation personnel observed and documented for fastener assemblies and methods used	--	X		
g. Proper storage provided for bolts, nuts, washers and other fastener components	--	X		
2. Inspection tasks during bolting:			AISC 360-10 N5.6-2	1705.2.1
a. Fastener assemblies, of suitable condition, placed in all holes and washers (if required) are positioned as required[2]	--	X		
b. Joint brought to the snug-tight condition prior to the pretensioning operation[2]	--	X		
c. Fastener component not turned by the wrench prevented from rotating[2]	--	X		
d. Fasteners are pretensioned in accordance with the RCSC Specification, progressing systematically from the most rigid point toward the free edges	--	X		
3. Inspection tasks after bolting:			AISC 360-10 N5.6-3	1705.2.1
a. Document acceptance or rejection of bolted connections	X	--		

1. Inspection tasks noted in this table are the responsibility of the Special Inspector or Quality Assurance Inspector (QAI). The fabricator and erector are responsible for all inspection tasks indicated in AISC 360-10 Section N5 assigned to the Quality Control Inspector (QCI)

2. Inspection tasks may be coordinated with the fabricator or erector's Quality Control Inspector (QCI) where indicated with this footnote. All other tasks shall be performed by the Special Inspector.

INSPECTION OF STEEL ELEMENTS OF COMPOSITE CONSTRUCTION PRIOR TO CONCRETE PLACEMENT (AISC 360-10 Table N6.1)

VERIFICATION AND INSPECTION	INSPECTION FREQUENCY		REFERENCED STANDARD	IBC REFERENCE
	CONTINUOUS	PERIODIC		
1. Placement and installation of steel deck	X	--	AISC 360-10 N6.1 AWS D1.1	--
2. Placement and installation of steel headed stud anchors	X	--		
3. Document acceptance or rejection of steel elements	X	--		

VERIFICATION AND INSPECTION OF OPEN-WEB STEEL JOISTS (IBC 1705.2.3)

VERIFICATION AND INSPECTION	INSPECTION FREQUENCY		REFERENCED STANDARD	IBC REFERENCE
	CONTINUOUS	PERIODIC		
1. Installation of open-web steel joists.			SJI specifications listed in Section 2207.1.	1705.2.3
a. End connections - welding or bolted	--	X		
b. Bridging - horizontal or diagonal				
1) Standard bridging	--	X		
2) Bridging that differs from the SJI specifications listed in Section 2207.1	--	X		

VERIFICATION AND INSPECTION OF OTHER STEEL CONSTRUCTION

VERIFICATION AND INSPECTION	INSPECTION FREQUENCY		REFERENCED STANDARD	IBC REFERENCE
	CONTINUOUS	PERIODIC		
1. Inspection or execution tasks prior to deck placement			SDI QA/QC Table 1.1	1705.2.2
a. Verify compliance of materials (deck and all deck accessories) with construction documents, including profiles, material properties, and base metal thickness	X	--		
b. Document acceptance or rejection of deck and deck accessories	X	--		
2. Inspection or execution tasks after deck placement			SDI QA/QC Table 1.2	
a. Verify compliance of deck and all deck accessories installation with construction documents	X	--		
b. Verify deck materials are represented by the mill certifications that comply with the construction documents	X	--		
c. Document acceptance or rejection of installation of deck and deck accessories	X	--		
3. Inspection or execution tasks prior to welding			SDI QA/QC Table 1.3	
a. Welding procedure specifications (WPSs) available	--	X		
b. Manufacturer certifications for welding consumables available	--	X		
c. Material identification (type/grade)	--	X		
d. Check welding equipment	--	X		
4. Inspection or execution tasks during welding			SDI QA/QC Table 1.4	
a. Use of qualified welders	--	X		
b. Control and handling of welding consumables	--	X		
c. Environmental conditions (wind speed, moisture, temperature)	--	X		
d. WPS followed	--	X		
5. Inspection or execution tasks after welding			SDI QA/QC Table 1.5	
a. Verify size and location of welds, including support, sidelap, and perimeter welds.	X	--		
b. Welds meet visual acceptance criteria	X	--		
c. Verify repair activities	X	--		
d. Document acceptance or rejection of welds	X	--		
6. Inspection or execution tasks prior to mechanical fastening			SDI QA/QC Table 1.6	
a. Manufacturer installation instructions available for mechanical fasteners	--	X		
b. Proper tools available for fastener installation	--	X		
c. Proper storage for mechanical fasteners	--	X		
7. Inspection or execution tasks during mechanical fastening			SDI QA/QC Table 1.7	
a. Fasteners are positioned as required	--	X		
b. Fasteners are installed in accordance with manufacturer's instructions	--	X		
8. Inspection or execution tasks after mechanical fastening			SDI QA/QC Table 1.8	
a. Check spacing, type, and installation of support fasteners	X	--		
b. Check spacing, type, and installation of sidelap fasteners	X	--		
c. Check spacing, type, and installation of perimeter fasteners	X	--		
d. Verify repair activities	X	--		
e. Document acceptance or rejection of mechanical fasteners	X	--		

VERIFICATION AND INSPECTION OF CONCRETE CONSTRUCTION (IBC TABLE 1705.3)

VERIFICATION AND INSPECTION	INSPECTION FREQUENCY		REFERENCED STANDARD	IBC REFERENCE
	CONTINUOUS	PERIODIC		
1. Inspection of reinforcing steel, including prestressing tendons, and verify placement	--	X	ACI 318: Ch. 20, 25.2, 25.3, 26.5.1-26.5.3	1908.4
2. Reinforcing bar welding:			AWS D1.4 ACI 318: 26.5.4	--
a. Verify weldability of reinforcing bars other than ASTM A 706	--	X		
b. Inspect single-pass fillet welds, maximum 5/16"	--	X		
c. Inspect all other welds	X	--		
3. Inspect anchors cast in concrete	--	X	ACI 318: 17.8.2	--
4. Inspect anchors post-installed in hardened concrete members				
a. Adhesive anchors installed in horizontally or upwardly inclined orientations to resist sustained tension loads	X	--	ACI 318: 17.8.2.4	--
b. Mechanical anchors and adhesive anchors not defined in 4.a	--	X	ACI 318: 17.8.2	--
5. Verifying use of required design mix	--	X	ACI 318: Ch. 19, 26.4.3, 26.4.4	1904.1, 1904.2, 1908.2, 1908.3
6. Prior to concrete placement, fabricate specimens for strength tests, perform slump and air content tests, and determine the temperature of the concrete	X	--	ASTM C 172 ASTM C 31 ACI 318: 26.4.5, 26.12	1908.10
7. Inspect concrete placement for proper application techniques	X	--	ACI 318: 26.4.5	1908.6, 1908.7, 1908.8
8. Verify maintenance of specified curing temperature and techniques	--	X	ACI 318: 26.4.7-26.4.9	1908.9
11. Verify in-situ concrete strength, prior to removal of shores and forms from beams and structural slabs	--	X	ACI 318: 26.10.2	--
12. Inspect formwork for shape, location and dimensions of the concrete members being formed	--	X	ACI 318: 26.10.1(b)	--

VERIFICATION AND INSPECTION OF SOILS (IBC TABLE 1705.6)

VERIFICATION, INSPECTION AND TESTING	INSPECTION FREQUENCY	
	CONTINUOUS	PERIODIC
1. Verify materials below shallow foundations are adequate to achieve the design bearing capacity	--	X
2. Verify excavations are extended to proper depth and have reached proper material	--	X
3. Perform classification and testing of controlled fill materials	--	X
4. Verify use of proper materials, densities and lift thicknesses during placement and compaction of controlled fill	X	--
5. Prior to placement of compacted fill, observe subgrade and verify that site has been prepared properly	--	X

VERIFICATION AND INSPECTION OF CAST-IN-PLACE DEEP FOUNDATION ELEMENTS (IBC TABLE 1705.8)

VERIFICATION AND INSPECTION	INSPECTION FREQUENCY	
	CONTINUOUS	PERIODIC
1. Inspect drilling operations and maintain complete and accurate records for each element	X	--
2. Verify placement locations and plumbness, confirm element diameters, bell diameters (if applicable), lengths, embedment into bedrock (if applicable) and adequate end bearing strata capacity. Record concrete or grout volumes	X	--
3. For concrete elements, perform tests and additional special inspections in accordance with IBC Section 1705.3	--	--

muñoz & company
1017 NORTH MAIN SUITE 300
SAN ANTONIO, TEXAS 78212
O. 210.349.1163 F. 210.525.1038
W W W . M U N O Z - C O . C O M

INTELLIGENT ENGINEERING SERVICES
ENGINEERING COMMUNITIES FROM THE GROUND UP
200 S. 10TH STREET, SUITE 1204 MCALLEN, TEXAS 78501
956.682.4645 ie-services.com
IES JOB NO: 3180027 TBPE FIRM F-432

STATE OF TEXAS
JASON D. IRISH
94227
LICENSED
PROFESSIONAL ENGINEER
11-08-18

UTRGV
The University of Texas Rio Grande Valley

UNIVERSITY OF TEXAS RIO GRANDE VALLEY
SCHOOL OF MEDICINE
TEAM BASED LEARNING CENTER
PROJECT NO: 903-1159
EDINBURG, TX
100% CONSTRUCTION DOCUMENTS

Issue/Revision

#	DESCRIPTION	DATE

Sheet Title
SPECIAL INSPECTIONS

Date
NOVEMBER 08, 2018

Project Number	Drawn By	Checked By
A17021.00	IES STAFF	JDI

Sheet Number
S004

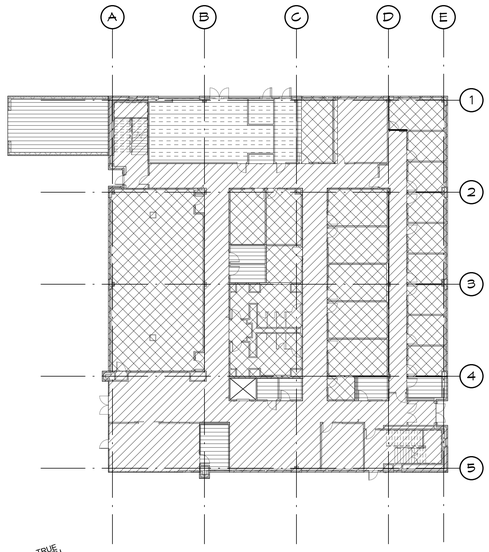

LIVE LOAD LEGEND	
HATCH PATTERN	UNIFORM LOAD(PSF)
	80 psf + 20 psf Partitions
	100 psf
	125 psf
	150 psf

TRUE NORTH
PLAN NORTH

1 FIRST LEVEL LIVE LOAD PLAN
SCALE: 1" = 20'-0"

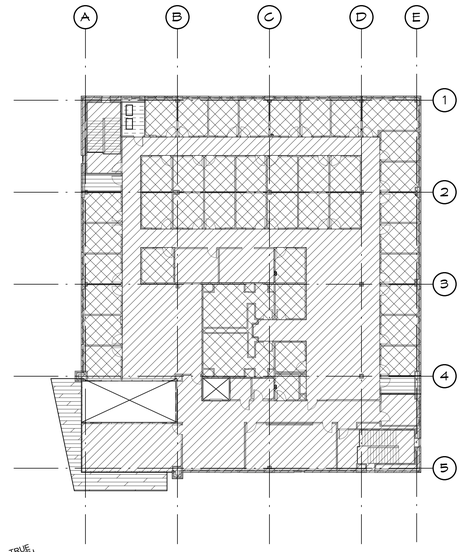

LIVE LOAD LEGEND	
HATCH PATTERN	UNIFORM LOAD(PSF)
	80 psf + 20 psf Partitions
	100 psf
	125 psf
	150 psf

TRUE NORTH
PLAN NORTH

2 SECOND LEVEL LIVE LOAD PLAN
SCALE: 1" = 20'-0"

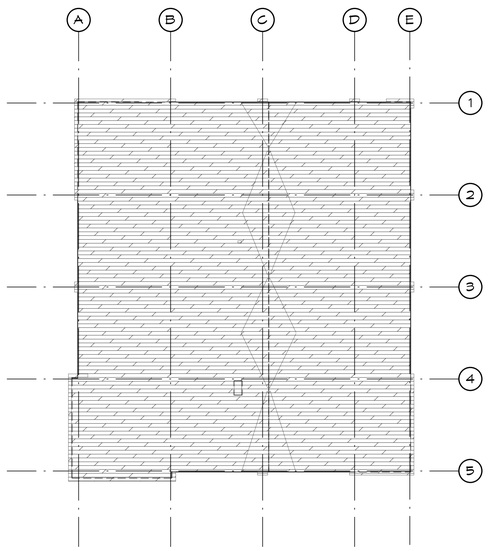

LIVE LOAD LEGEND	
HATCH PATTERN	UNIFORM LOAD(PSF)
	30 psf

TRUE NORTH
PLAN NORTH

3 ROOF LEVEL LIVE LOAD PLAN
SCALE: 1" = 20'-0"

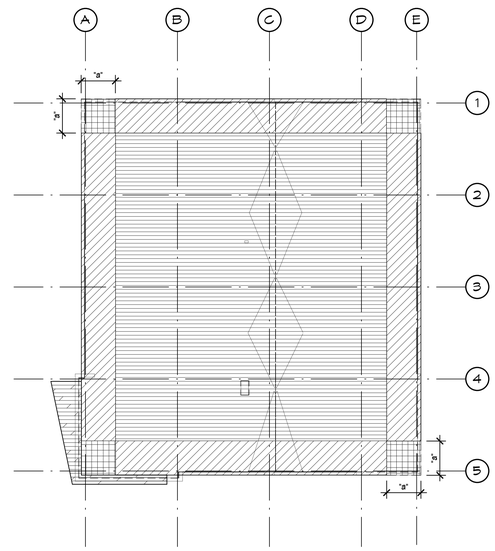

UTRGV OFFICE BLDG CENTRAL - WIND PRESSURE LOAD LEGEND			
ZONE	10 SF	100 SF	500 SF
1	-50 psf/+20 psf	-46 psf/+16 psf	-46 psf/+16 psf
2	-83 psf/+46 psf	-54 psf/+39 psf	-54 psf/+39 psf
3	-125 psf/+46 psf	-54 psf/+39 psf	-54 psf/+39 psf
4	-49 psf/+46 psf	-43 psf/+39 psf	-38 psf/+34 psf
5	-61 psf/+46 psf	-48 psf/+39 psf	-38 psf/+34 psf
CANOPY	+61 psf/-61 psf	+48 psf/-48 psf	+38 psf/-38 psf

PARAPET WIND PRESSURE LOADS				
ZONE	A (WINDWARD) 10 SF	A (WINDWARD) 100 SF	B (LEEWARD) 10 SF	B (LEEWARD) 10 SF
2/4	129 psf	93 psf	-85 psf	-82 psf
3/5	129 psf	93 psf	-106 psf	-86 psf

WIND LOAD PLAN NOTES:

1. NEGATIVE PRESSURES DENOTE FORCE ACTING AWAY FROM BUILDING SURFACE (SUCTION) a = 11'-2"
2. PRESSURES INDICATED ARE ULTIMATE LEVEL DESIGN LOADS, ALLOWABLE LEVEL LOADS MAY BE OBTAINED BY MULTIPLYINGTHE ABOVE LOADS BY 0.6.
3. PRESSURES FOR TRIBUTARY AREAS IN BETWEEN THE LISTED VALUES MAY BE LINEARLY INTERPOLATED.
4. SCHEDULED PRESSURES ARE FOR GROSS UPLIFT CONDITIONS.

TRUE NORTH
PLAN NORTH

4 ROOF LEVEL WIND LOAD PLAN
SCALE: 1" = 20'-0"

muñoz & company
1017 NORTH MAIN SUITE 300
SAN ANTONIO, TEXAS 78212
O. 210.349.1163 F. 210.525.1038
WWW.MUNOZ-CO.COM

INTELLIGENT ENGINEERING SERVICES
ENGINEERING COMMUNITIES FROM THE GROUND UP
200 S. 10TH STREET, SUITE 1204 McALLEN, TEXAS 78501
956.682.4645 ie-services.com
IES JOB NO: 3180027 TBPE FIRM F-432

STATE OF TEXAS
JASON D. IRISH
94227
LICENSED
PROFESSIONAL ENGINEER

11-08-18

UTRGV
The University of Texas Rio Grande Valley

UNIVERSITY OF TEXAS RIO GRANDE VALLEY
SCHOOL OF MEDICINE TEAM BASED LEARNING CENTER
PROJECT NO: 903-1159
EDINBURG, TX
100% CONSTRUCTION DOCUMENTS

Issue/Revision

#	DESCRIPTION	DATE

Sheet Title
LIVE LOAD & WIND LOAD PLANS

Date
NOVEMBER 08, 2018

Project Number	Drawn By	Checked By
A17021.00	IES STAFF	JDI

Sheet Number
S005

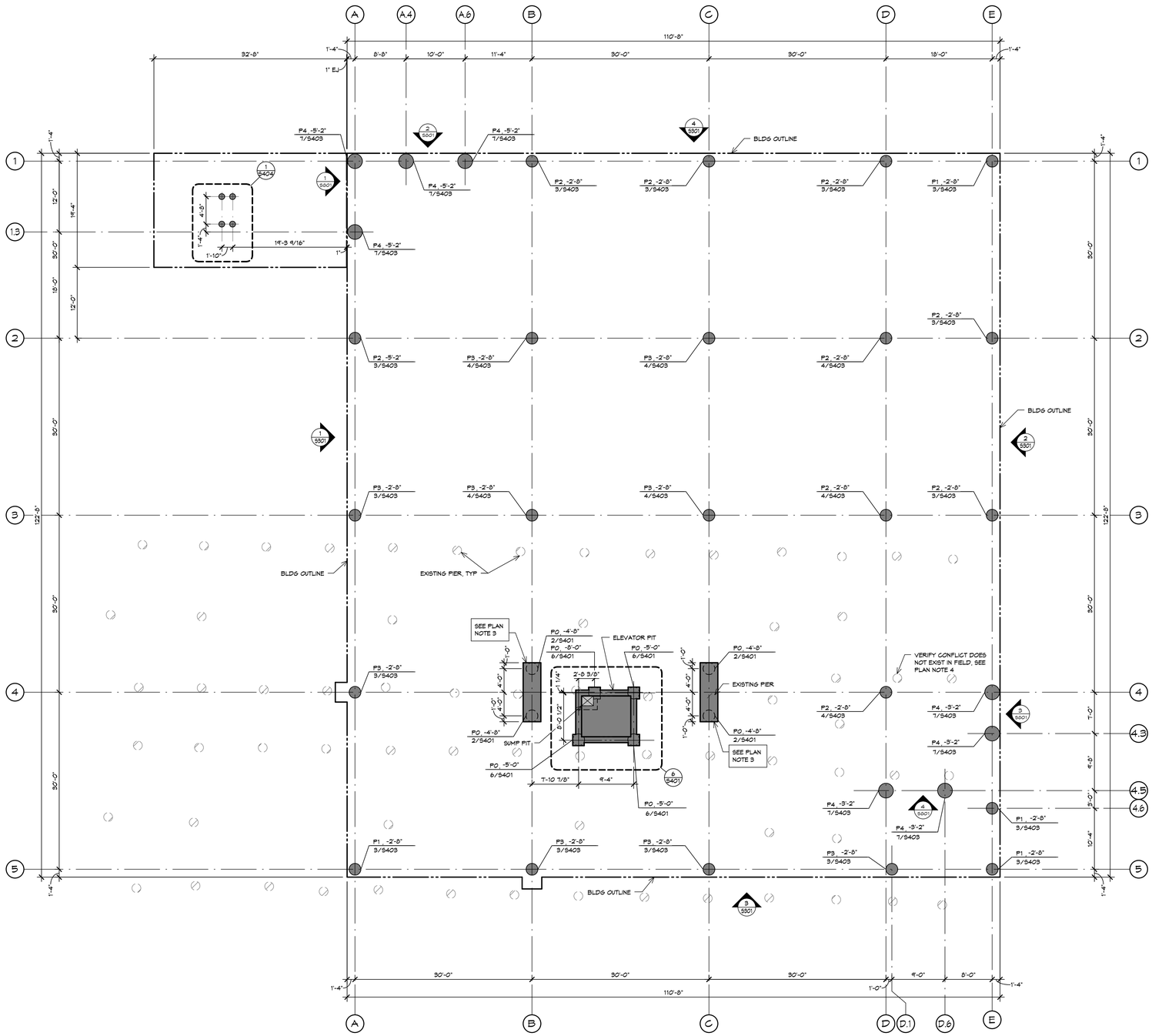

1 PIER LEVEL FRAMING PLAN

SCALE: 1/8" = 1'-0"

TRUE NORTH
PLAN NORTH

PIER SCHEDULE					
MARK	SHAFT DIAMETER	VERTICAL BARS	TIES/PITCH	B. O. PIER ELEVATION	REMARKS
P0	24"	(6) - #8	#3 @ 12" OC	-35.00'	SEE 1/S401
P1	24"	(6) - #8	#3 @ 12" OC	-40.00'	SEE 1/S401
P2	24"	(6) - #8	#3 @ 12" OC	-45.00'	SEE 1/S401
P3	24"	(6) - #8	#3 @ 12" OC	-50.00'	SEE 1/S401
P4	30"	(10) - #9	#4 @ 12" OC	-60.00'	SEE 1/S401

SCHEDULE NOTES:

1. BOTTOM OF PIER ELEVATION SHOWN IN SCHEDULE IS BASED ON FINISH FLOOR ELEVATION OF 0'-0"
2. TOP OF PIER ELEVATION SHOWN IN PLAN IS BASED ON THE BUILDING FINISH FLOOR ELEVATION OF 0'-0".

PIER LEGEND

F.F. EL = 0'-0"

PIER TYPE, T.O PIER EL
T.O PIER DETAIL

EXISTING PIER

PLAN NOTES:

1. FINISH FLOOR ELEVATION = 0'-0", UNLESS NOTED OTHERWISE. DATUM ELEVATION 48.10' = 0'-0"
2. CENTERLINES OF PIERS NOT SPECIFICALLY LOCATED ON PLAN BY NOTE OR DIMENSION SHALL BE LOCATED AS FOLLOWS:
   A. SUPPORTING COLUMNS: CENTERLINES OF COLUMNS.
   B. SUPPORTING BEAMS AND WALLS: CENTERLINES OF WALL OR BEAM IN ONE DIRECTION, GRID OR AS NOTED IN OTHER DIRECTION. AT
   CORNER CONDITION: CENTERLINES OF WALLS OR BEAMS.
   C. COLUMNS EMBEDDED IN BEAMS OR WALLS (PILASTERS): CENTERLINES OF THE COLUMN.
3. EXISTING PIERS SHALL BE SURVEYED FOR SIZE AND LOCATION; WHERE CONFLICTS BETWEEN EXISTING AND NEW OCCUR, THE CONDITION SHALL BE REPORTED TO THE ARCH/ENGR. SEE 2/S401 FOR TRANSFER PIER CAP DETAIL.
4. A PIER CONFLICT SHALL BE DEFINED AS A CLEARANCE OF LESS THAN 8 INCHES BETWEEN THE NEW AND EXISTING PIERS.

muñoz & company
1017 NORTH MAIN SUITE 300
SAN ANTONIO, TEXAS 78212
O. 210.349.1163 F. 210.525.1038
W W W . M U N O Z - C O . C O M

INTELLIGENT ENGINEERING SERVICES
ENGINEERING COMMUNITIES FROM THE GROUND UP
200 S. 10TH STREET, SUITE 1204 McALLEN, TEXAS 78501
956.682.4645 ie-services.com
IES JOB NO: 31800027 TBPE FIRM F-432

STATE OF TEXAS
JASON D. IRISH
94227
LICENSED
PROFESSIONAL ENGINEER

11-08-18

UTRGV
The University of Texas Rio Grande Valley

UNIVERSITY OF TEXAS RIO GRANDE VALLEY
SCHOOL OF MEDICINE
TEAM BASED LEARNING CENTER

PROJECT NO: 903-1159

EDINBURG, TX

100% CONSTRUCTION DOCUMENTS

Issue/Revision

#	DESCRIPTION	DATE

Sheet Title
PIER LEVEL FRAMING PLAN

Date
NOVEMBER 08, 2018

Project Number	Drawn By	Checked By
A17021.00	IES STAFF	JDI

Sheet Number
S100

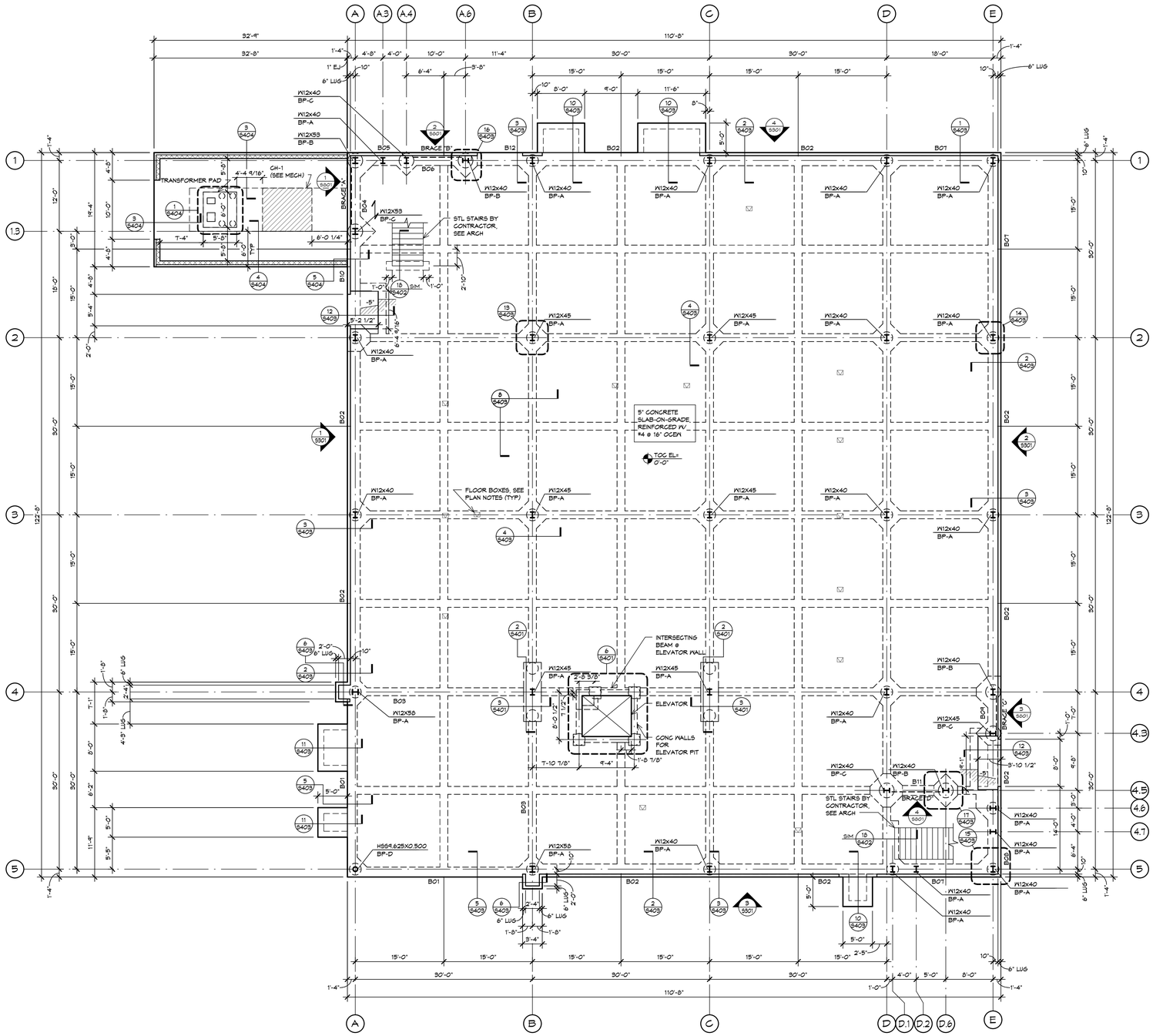

TRUE NORTH
PLAN NORTH

1 FOUNDATION LEVEL FRAMING PLAN

SCALE: 1/8" = 1'-0"

COLUMN LEGEND	
I	COLUMN SIZE / BASE PLATE TYPE (SEE 1/S405)

PLAN NOTES:

1. FINISH FLOOR ELEVATION = 0'-0", UNLESS NOTED OTHERWISE. ACTUAL ELEVATION 96.70 = 0'-0".
2. TOP OF CONCRETE ELEVATION (TOC EL) = FINISH FLOOR. UNLESS RECESSED TO RECEIVE FLOORING MATERIALS.
3. REFER TO THE ARCHITECTURAL DRAWINGS FOR EXACT LOCATIONS OF FLOOR RECESSES, DROPS AND SLOPES NOT DIMENSIONED ON PLAN.
4. TYPICAL CONCRETE SLAB THICKNESS IS 5" (OVERALL), UNLESS NOTED OTHERWISE.
5. REFER TO MECHANICAL, ELECTRICAL, AND PLUMBING DRAWINGS FOR LOCATION AND DIMENSIONS FOR FLOOR PENETRATIONS NOT DIMENSIONED ON PLAN. CONTRACTOR TO COORDINATE.
6. COORDINATE WITH STAIR MANUFACTURER FOR EXACT LOCATION AND SIZE OF STAIR COLUMNS AND PLATE LOCATION, TYP.
7. COORDINATE FLOOR BOX LOCATION WITH ELECTRICAL AND ARCHITECTURAL DRAWINGS.
8. SEE S401 THROUGH S405 FOR TYPICAL CONCRETE DETAILS & SECTIONS.
9. ☒ - INDICATES FLOOR OUTLET, SEE 16/S402 & 17/S402 FOR THICKENED SLAB. SEE ARCHITECTURAL DRAWINGS FOR LOCATIONS.

muñoz & company
1017 NORTH MAIN SUITE 300
SAN ANTONIO, TEXAS 78212
O. 210.349.1163 F. 210.525.1038
W W W . M U N O Z - C O . C O M

INTELLIGENT ENGINEERING SERVICES
ENGINEERING COMMUNITIES FROM THE GROUND UP
200 S. 10TH STREET, SUITE 1204 McALLEN, TEXAS 78501
956.682.4645 ie-services.com
IES JOB NO: 318OO27 TBPE FIRM F-432

STATE OF TEXAS
JASON D. IRISH
94227
LICENSED
PROFESSIONAL ENGINEER

11-08-18

UTRGV
The University of Texas Rio Grande Valley

UNIVERSITY OF TEXAS RIO GRANDE VALLEY
SCHOOL OF MEDICINE
TEAM BASED LEARNING CENTER

PROJECT NO: 903-1159

EDINBURG, TX

100% CONSTRUCTION DOCUMENTS

Issue/Revision

#	DESCRIPTION	DATE

Sheet Title
FOUNDATION LEVEL FRAMING PLAN

Date
NOVEMBER 08, 2018

Project Number	Drawn By	Checked By
A17021.00	IES STAFF	JDI

Sheet Number
S201

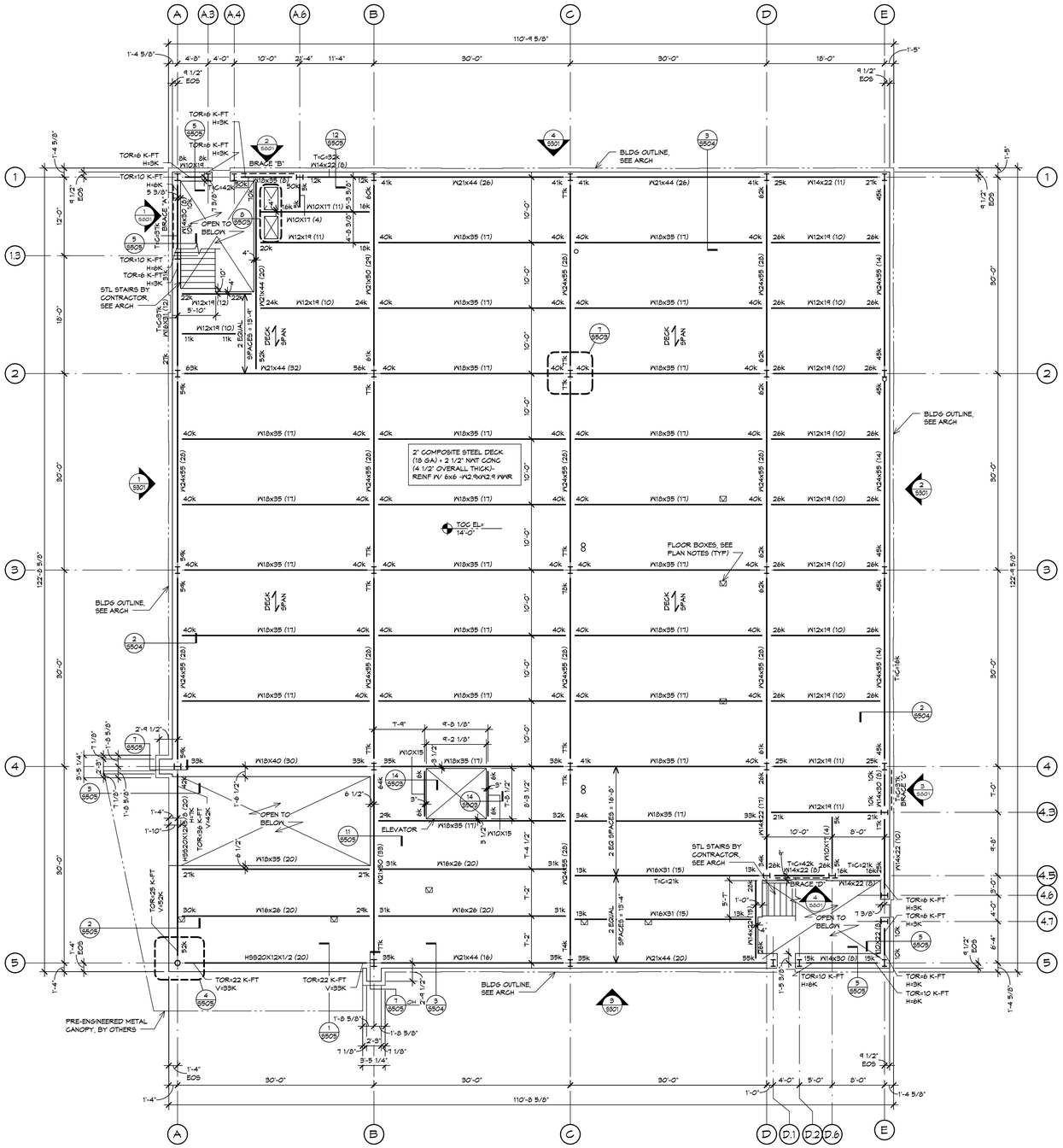

1 SECOND LEVEL FRAMING PLAN

SCALE: 1/8" = 1'-0"

PLAN NOTES:

1. FINISH FLOOR ELEVATION = 14'-0", UNLESS NOTED OTHERWISE.
2. TOP OF CONCRETE ELEVATION (TOC EL) = FINISH FLOOR. UNLESS RECESSED TO RECEIVE FLOORING MATERIALS.
3. REFER TO THE ARCHITECTURAL DRAWINGS FOR EXACT LOCATIONS OF FLOOR RECESSES, DROPS AND SLOPES NOT DIMENSIONED ON PLAN.
4. REFER TO MECHANICAL, ELECTRICAL, AND PLUMBING DRAWINGS FOR LOCATION AND DIMENSIONS OF FLOOR PENETRATIONS NOT DIMENSIONED ON PLAN. CONTRACTOR TO COORDINATE.
5. TYPICAL COMPOSITE CONCRETE SLAB THICKNESS IS 4 1/2" (OVERALL), UNLESS NOTED OTHERWISE. SEE STRUCTURAL NOTES.
6. STEEL BEAMS ARE CENTERED ON AND EQUALLY SPACED BETWEEN COLUMN CENTERLINES, UNLESS NOTED OTHERWISE.
7. TOP OF STEEL ELEVATION (TOS EL) = TOP OF BEAM, JOIST OR MEMBER SUPPORTING ROOF DECK + BOTTOM OF DECK.
8. SEE MECHANICAL, ELECTRICAL, AND PLUMBING DRAWINGS FOR LOCATIONS AND DIMENSIONS OF ROOF PENETRATIONS NOT DIMENSIONED IN PLAN. CONTRACTOR TO COORDINATE.
9. SEE S501, S503, AND S504 FOR TYPICAL STEEL DETAILS & SECTIONS.
10. ☒ - INDICATES FLOOR OUTLET, SEE 9/S503, SEE ARCHITECTURAL DRAWINGS FOR LOCATIONS.

muñoz & company
1017 NORTH MAIN SUITE 300
SAN ANTONIO, TEXAS 78212
O. 210.349.1163 F. 210.525.1038
W W W . M U N O Z - C O . C O M

INTELLIGENT ENGINEERING SERVICES
ENGINEERING COMMUNITIES FROM THE GROUND UP
200 S. 10TH STREET, SUITE 1204 McALLEN, TEXAS 78501
956.682.4643 ie-services.com
IES JOB NO: 3180027 TBPE FIRM F-432

STATE OF TEXAS
JASON D. IRISH
94227
LICENSED
PROFESSIONAL ENGINEER

11-08-18

UTRGV
The University of Texas Rio Grande Valley

UNIVERSITY OF TEXAS RIO GRANDE VALLEY
SCHOOL OF MEDICINE
TEAM BASED LEARNING CENTER

PROJECT NO: 903-1159

EDINBURG, TX

100% CONSTRUCTION DOCUMENTS

Issue/Revision

#	DESCRIPTION	DATE

Sheet Title
SECOND LEVEL FRAMING PLAN

Date
NOVEMBER 08, 2018

Project Number	Drawn By	Checked By
A17021.00	IES STAFF	JDI

Sheet Number

S202

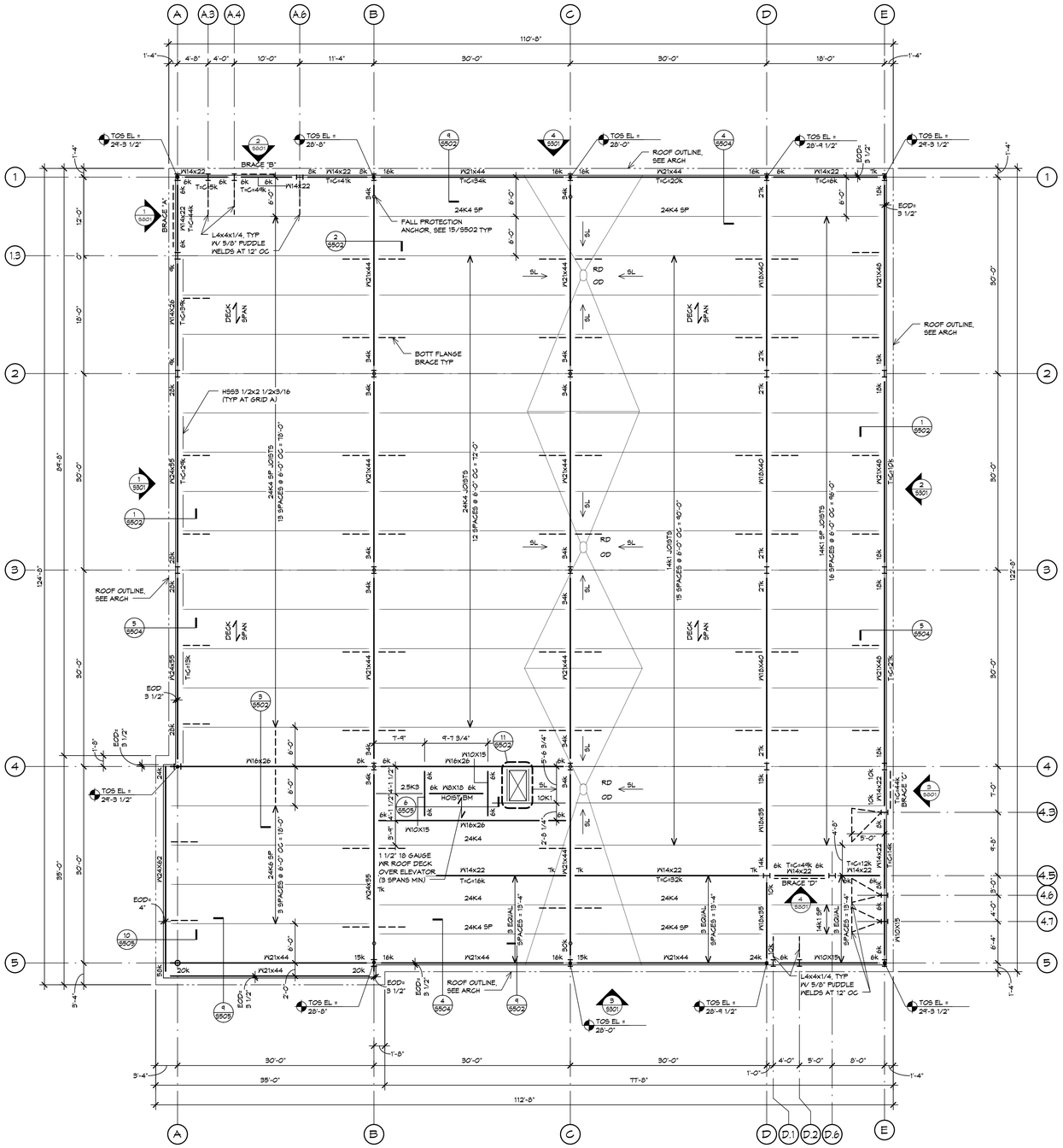

TRUE NORTH
PLAN NORTH

1 ROOF LEVEL FRAMING PLAN

SCALE: 1/8" = 1'-0"

PLAN NOTES:

1. TOP OF ROOF STRUCTURE IS SLOPED FOR DRAINAGE. SEE ELEVATIONS NOTED ON THE PLAN. SLOPES SHALL BE UNIFORM BETWEEN COLUMN CENTERLINES, UNLESS NOTED OTHERWISE.
2. TOP OF STEEL ELEVATION (TOS EL) = TOP OF BEAM, JOIST, OR MEMBER SUPPORTING ROOF DECK = BOTTOM OF DECK.
3. SEE MECHANICAL, ELECTRICAL, AND PLUMBING DRAWINGS FOR LOCATION AND DIMENSIONS OF ROOF PENETRATIONS NOT DIMENSIONED ON PLAN. CONTRACTOR TO COORDINATE.
4. STEEL JOISTS SHALL BE CENTERED ON AND EQUALLY SPACED BETWEEN COLUMN CENTERLINES, UNLESS NOTED OTHERWISE.
5. JOISTS NOTED AS "SP" ARE SPECIAL DESIGNS TO BE PROVIDED BY SUPPLIER FOR LOADINGS INDICATED.
6. SEE S501, S502, AND S504 FOR TYPICAL STEEL DETAILS & SECTIONS.

muñoz & company
1017 NORTH MAIN SUITE 300
SAN ANTONIO, TEXAS 78212
O. 210.349.1163 F. 210.525.1038
W W W . M U N O Z - C O . C O M

INTELLIGENT ENGINEERING SERVICES
ENGINEERING COMMUNITIES FROM THE GROUND UP
200 S. 10TH STREET, SUITE 1204 McALLEN, TEXAS 78501
956.682.4643 ie-services.com
IES JOB NO: 318000 27 TBPE FIRM F-482

STATE OF TEXAS
JASON D. IRISH
94227
LICENSED
PROFESSIONAL ENGINEER

11-08-18

UTRGV
The University of Texas Rio Grande Valley

UNIVERSITY OF TEXAS RIO GRANDE VALLEY
SCHOOL OF MEDICINE
TEAM BASED LEARNING CENTER

PROJECT NO: 903-1159
EDINBURG, TX
100% CONSTRUCTION DOCUMENTS

Issue/Revision

#	DESCRIPTION	DATE

Sheet Title
ROOF LEVEL FRAMING PLAN

Date
NOVEMBER 08, 2018

Project Number	Drawn By	Checked By
A17021.00	IES STAFF	JDI

Sheet Number
S203

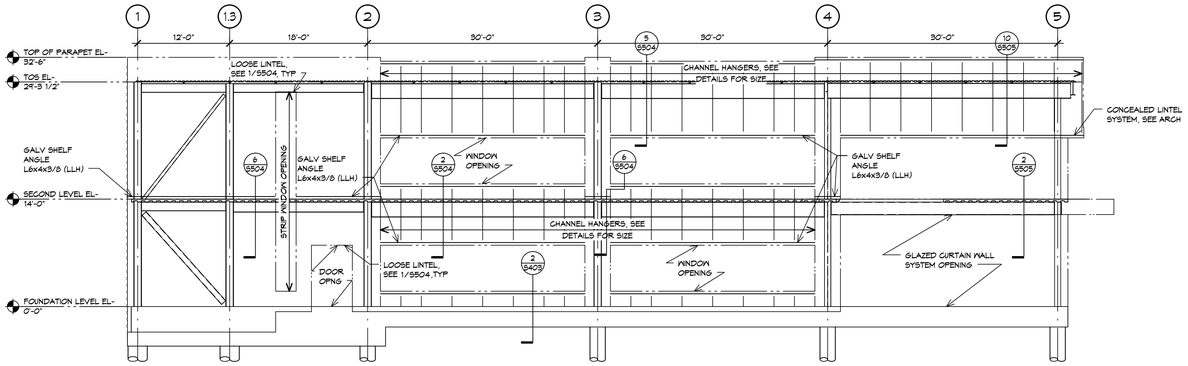

1 WEST ELEVATION
SCALE: 1/8" = 1'-0"

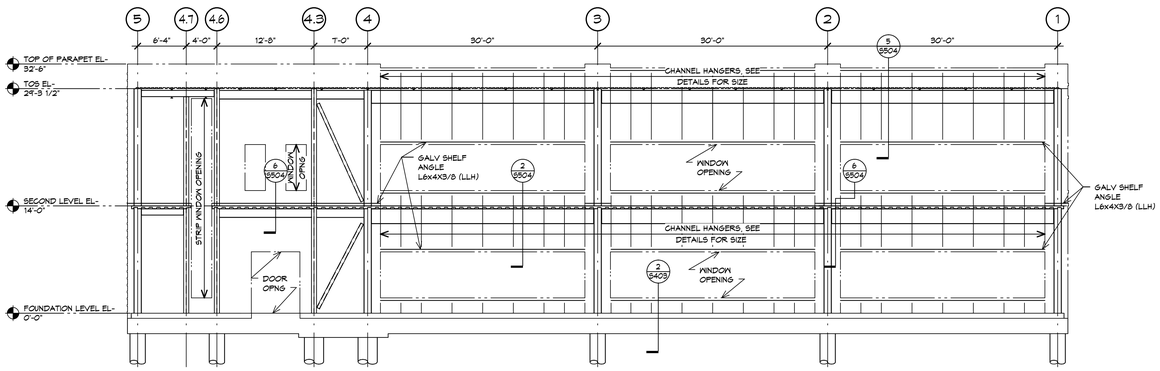

2 EAST ELEVATION
SCALE: 1/8" = 1'-0"

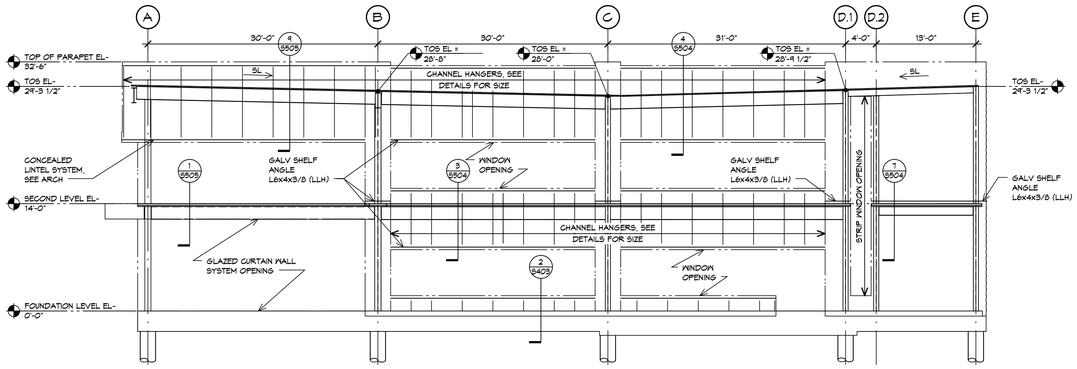

3 SOUTH ELEVATION
SCALE: 1/8" = 1'-0"

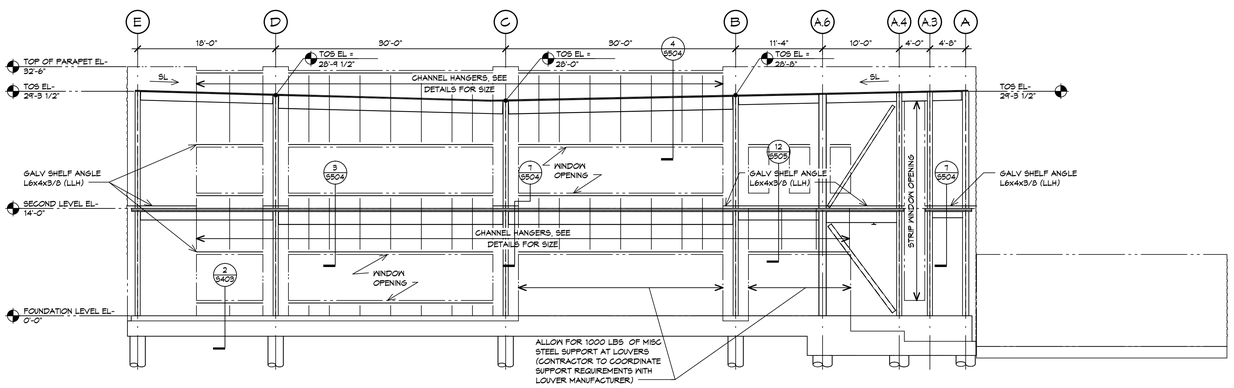

4 NORTH ELEVATION
SCALE: 1/8" = 1'-0"

muñoz & company
1017 NORTH MAIN SUITE 300
SAN ANTONIO, TEXAS 78212
O. 210.349.1163 F. 210.525.1038
W W W . M U N O Z - C O . C O M

INTELLIGENT ENGINEERING SERVICES
ENGINEERING COMMUNITIES FROM THE GROUND UP
200 S. 10TH STREET, SUITE 1204 McALLEN, TEXAS 78501
956.682.4645 ie-services.com
IES JOB NO: 3180027 TBPE FIRM F-432

STATE OF TEXAS
JASON D. IRISH
94227
LICENSED
PROFESSIONAL ENGINEER

11-08-18

UTRGV
The University of Texas Rio Grande Valley

UNIVERSITY OF TEXAS RIO GRANDE VALLEY
SCHOOL OF MEDICINE
TEAM BASED LEARNING CENTER
PROJECT NO: 903-1159
EDINBURG, TX
100% CONSTRUCTION DOCUMENTS

Issue/Revision

#	DESCRIPTION	DATE

Sheet Title
EXTERIOR ELEVATIONS

Date
NOVEMBER 08, 2018

Project Number	Drawn By	Checked By
A17021.00	IES STAFF	JDI

Sheet Number
S301

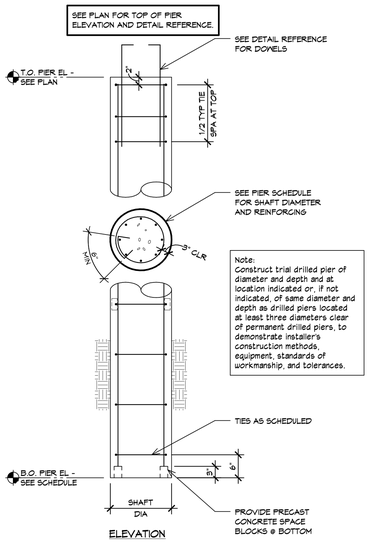

1 TYPICAL DRILLED PIER DETAIL
SCALE: 3/4" = 1'-0"

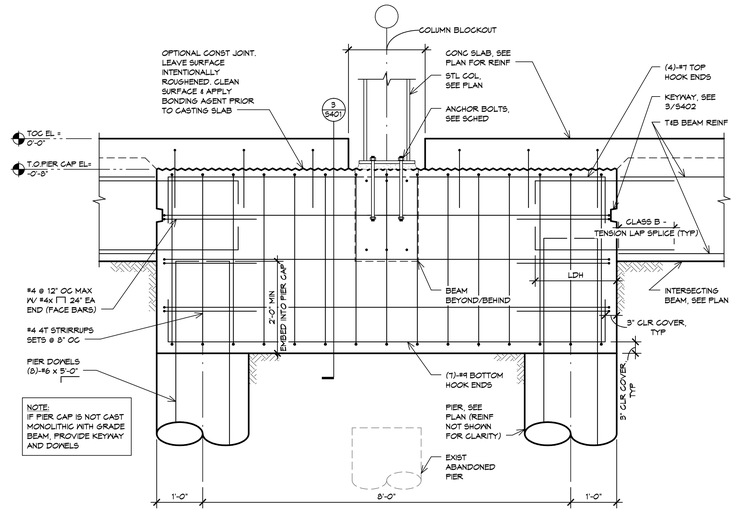

2 SECTION AT PIER CAP
SCALE: 3/4" = 1'-0"

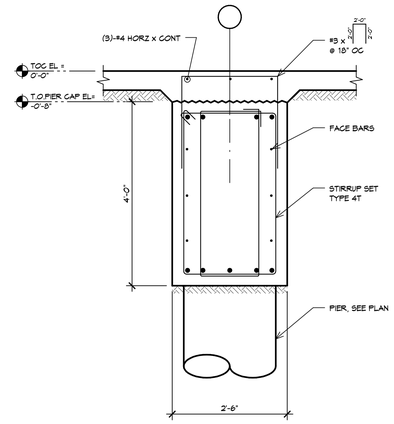

3 SECTION AT PIER CAP
SCALE: 3/4" = 1'-0"

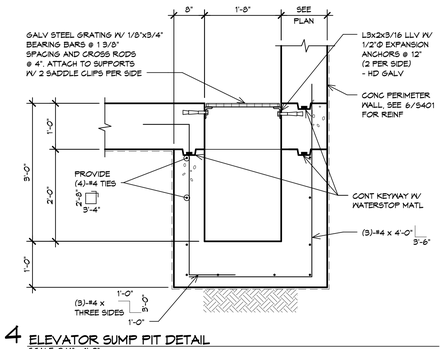

4 ELEVATOR SUMP PIT DETAIL
SCALE: 3/4" = 1'-0"

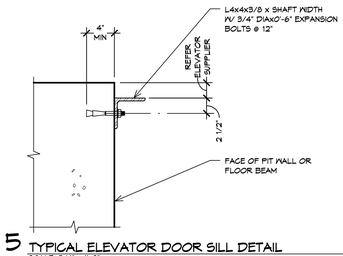

5 TYPICAL ELEVATOR DOOR SILL DETAIL
SCALE: 3/4" = 1'-0"

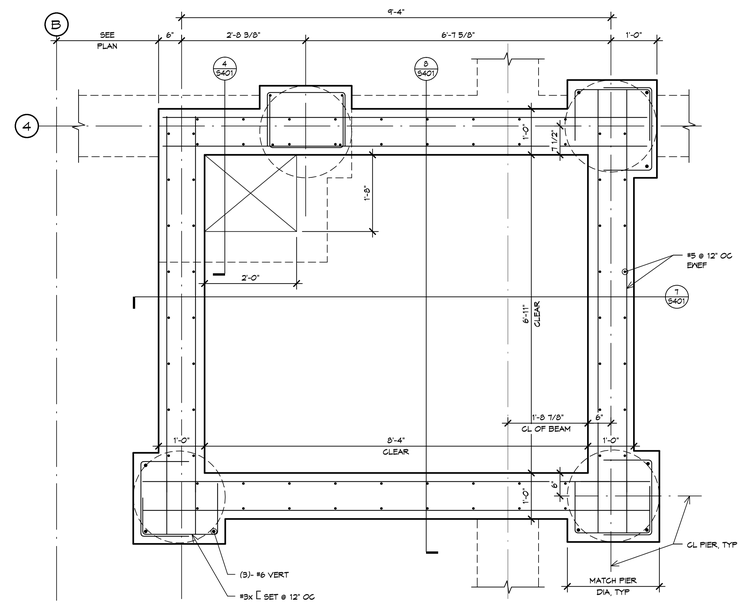

6 ELEVATOR PIT SLAB AND WALL PLAN
SCALE: 3/4" = 1'-0"

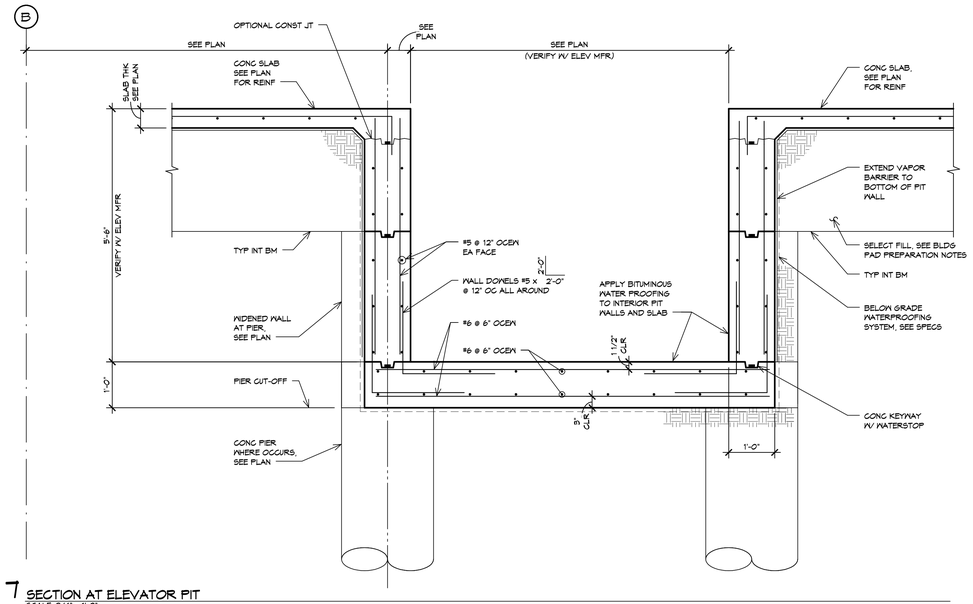

7 SECTION AT ELEVATOR PIT
SCALE: 3/4" = 1'-0"

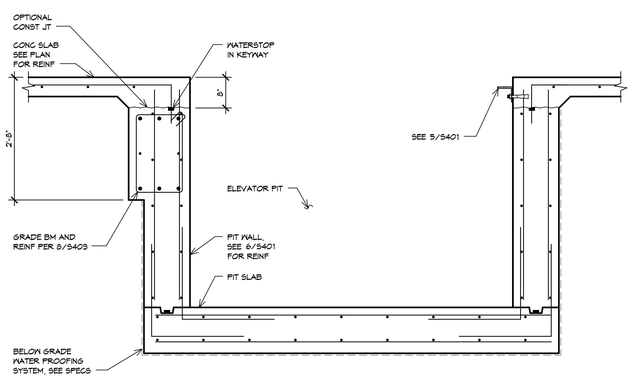

8 SECTION
SCALE: 3/4" = 1'-0"

muñoz & company
1017 NORTH MAIN SUITE 300
SAN ANTONIO, TEXAS 78212
O. 210.349.1163 F. 210.525.1038
W W W . M U N O Z - C O . C O M

INTELLIGENT ENGINEERING SERVICES
ENGINEERING COMMUNITIES FROM THE GROUND UP
200 S. 10TH STREET, SUITE 1204 McALLEN, TEXAS 78501
956.682.4645 ie-services.com
IES JOB NO: 3180027 TBPE FIRM F-432

STATE OF TEXAS
JASON D. IRISH
94227
LICENSED PROFESSIONAL ENGINEER
11-08-18

UTRGV
The University of Texas Rio Grande Valley

UNIVERSITY OF TEXAS RIO GRANDE VALLEY
SCHOOL OF MEDICINE
TEAM BASED LEARNING CENTER
PROJECT NO: 903-1159
EDINBURG, TX
100% CONSTRUCTION DOCUMENTS

Issue/Revision

#	DESCRIPTION	DATE

Sheet Title
CONCRETE TYPICAL DETAILS

Date
NOVEMBER 08, 2018

Project Number	Drawn By	Checked By
A17021.00	IES STAFF	JDI

Sheet Number
S401

NOTES:

1. MATCH SIZE, LOCATION AND NUMBER OF HORIZONTAL BEAM AND WALL BARS, EXCEPT THAT WHERE THERE ARE MORE THAN 2 TOP OR BOTTOM BARS, ONLY THE INSIDE AND OUTSIDE BARS MUST BE MATCHED.
2. WHERE 90 DEGREE HOOKS ARE PROVIDED FOR TOP BARS CORNER BARS MAY BE OMITTED AT TOP. WHERE 90 DEGREE HOOKS ARE PROVIDED FOR BOTTOM BARS, CORNER BARS MAY BE OMITTED AT BOTTOM.

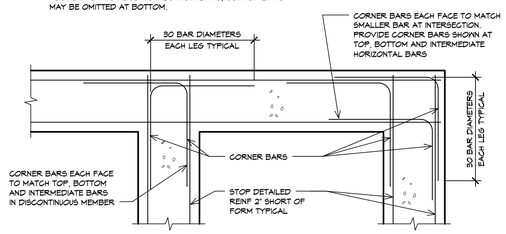

PLAN

1 TYPICAL CORNER BARS AT WALL OR GRADE BEAM INTERSECTION DETAIL
NO SCALE

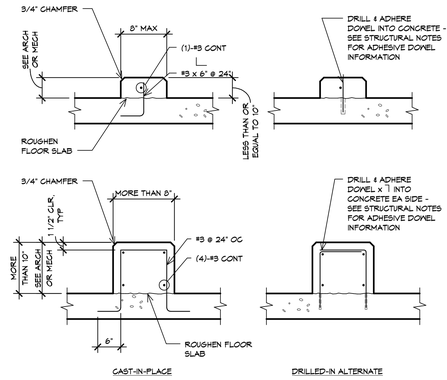

CAST-IN-PLACE

DRILLED-IN ALTERNATE

2 TYPICAL CONCRETE CURB DETAILS
NO SCALE

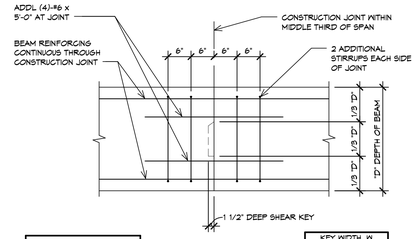

NOTES:
1. THIS DETAIL APPLIES TO BEAMS ≤ 4'-0" DEPTH.

ELEVATION

KEY WIDTH, W	
GRADEBEAM WIDTH 'T'	W
< 12"	3 1/2"
12" TO 16"	5 1/2"
16" TO 20"	7 1/4"
20" TO 24"	9 1/4"
24" TO 30"	11 1/4"

3 TYPICAL CONCRETE BEAM CONSTRUCTION JOINT DETAIL
NO SCALE

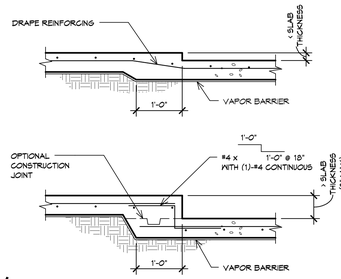

4 TYPICAL DROP IN SLAB-ON-GRADE DETAIL
NO SCALE

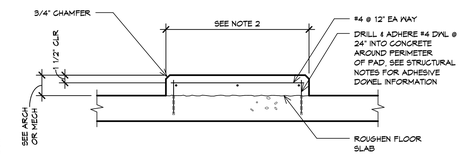

NOTES:

1. EQUIPMENT PADS TO BE PROVIDED UNDER EQUIPMENT SUPPORTED ON SLAB-ON-GRADE OR ELEVATED SLABS.
2. COORDINATE MECHANICAL PAD SIZE, LOCATION AND EMBEDDED ITEMS WITH MEP DRAWINGS AND EQUIPMENT MANUFACTURER.

5 TYPICAL MECHANICAL EQUIPMENT PAD DETAIL
NO SCALE

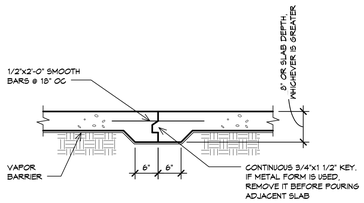

6 TYPICAL SLAB-ON-GRADE CONSTRUCTION JOINT DETAIL
NO SCALE

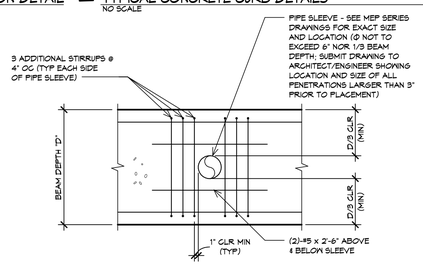

ELEVATION

7 TYPICAL HORIZONTAL BEAM PENETRATION DETAIL
NO SCALE

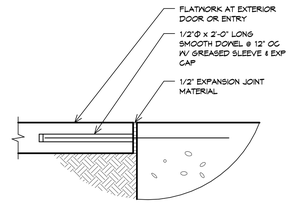

8 TYPICAL FLATWORK AT EXTERIOR DOORS AND ENTRIES DETAIL
NO SCALE

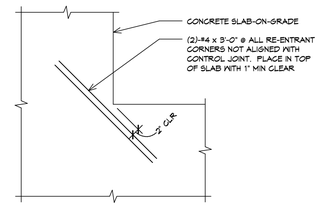

PLAN

9 TYPICAL SLAB-ON-GRADE RE-ENTRANT CORNER REINFORCING DETAIL
NO SCALE

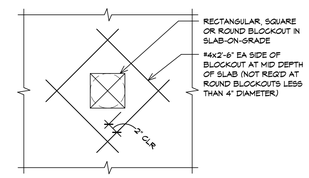

PLAN

10 TYPICAL ADDITIONAL REINFORCING AT BLOCKOUT IN SLAB-ON-GRADE DETAIL
NO SCALE

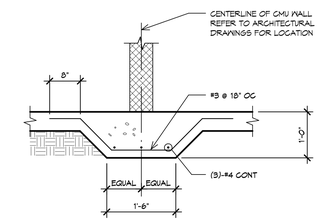

11 TYPICAL SLAB-ON-GRADE STIFFENER BEAM DETAIL
NO SCALE

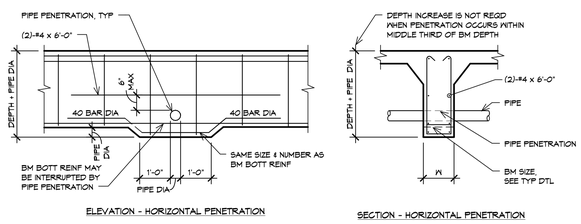

ELEVATION - HORIZONTAL PENETRATION

SECTION - HORIZONTAL PENETRATION

* Ld TENSION DEVELOPMENT LENGTH (GRADE 60 BARS - NORMAL WEIGHT CONCRETE)						
BAR SIZE	fc = 3000 psi		fc = 4000 psi		fc = 5000 psi	
	TOP BARS	OTHER BARS	TOP BARS	OTHER BARS	TOP BARS	OTHER BARS
#3	1'-10"	1'-5"	1'-7"	1'-3"	1'-5"	1'-1"
#4	2'-5"	1'-10"	2'-1"	1'-7"	1'-11"	1'-5"
#5	3'-0"	2'-4"	2'-7"	2'-0"	2'-4"	1'-10"
#6	3'-7"	2'-9"	3'-1"	2'-5"	2'-10"	2'-2"
#7	5'-3"	4'-0"	4'-6"	3'-6"	4'-1"	3'-2"
#8	6'-0"	4'-7"	5'-2"	4'-0"	4'-8"	3'-7"
#9	6'-9"	5'-2"	5'-10"	4'-6"	5'-3"	4'-0"
#10	7'-7"	5'-10"	6'-7"	5'-1"	5'-11"	4'-6"
#11	8'-5"	6'-6"	7'-3"	5'-7"	6'-6"	5'-0"

* DENOTES BAR SPACING NOT LESS THAN 2 BAR DIAMETERS, CLEAR COVER NOT LESS THAN 1 BAR DIAMETER.

BASIC TENSION LAP SPLICES-CLASS B (GRADE 60 BARS - NORMAL WEIGHT CONCRETE)						
BAR SIZE	fc = 3000 psi		fc = 4000 psi		fc = 5000 psi	
	TOP BARS	OTHER BARS	TOP BARS	OTHER BARS	TOP BARS	OTHER BARS
#3	2'-4"	1'-10"	2'-1"	1'-7"	1'-10"	1'-5"
#4	3'-2"	2'-5"	2'-9"	2'-1"	2'-5"	1'-11"
#5	3'-11"	3'-0"	3'-5"	2'-7"	3'-0"	2'-4"
#6	4'-8"	3'-7"	4'-1"	3'-1"	3'-8"	2'-10"
#7	6'-9"	5'-3"	5'-11"	4'-6"	5'-3"	4'-1"
#8	7'-9"	6'-0"	6'-9"	5'-2"	6'-0"	4'-8"
#9	8'-9"	6'-9"	7'-7"	5'-10"	6'-9"	5'-3"
#10	9'-10"	7'-7"	8'-6"	6'-7"	7'-8"	5'-11"
#11	10'-11"	8'-5"	9'-6"	7'-3"	8'-6"	6'-6"

Ldh HOOK DEVELOPMENT LENGTH (GRADE 60 BARS - NORMAL WEIGHT CONCRETE)			
BAR SIZE	fc = 3000 psi	fc = 4000 psi	fc = 5000 psi
#3	0'-9"	0'-8"	0'-7"
#4	0'-11"	0'-10"	0'-9"
#5	1'-2"	1'-0"	0'-11"
#6	1'-5"	1'-3"	1'-1"
#7	1'-8"	1'-5"	1'-3"
#8	1'-10"	1'-7"	1'-5"
#9	2'-1"	1'-10"	1'-8"
#10	2'-4"	2'-1"	1'-10"
#11	2'-7"	2'-3"	2'-0"

13 TYPICAL REINFORCEMENT DEVELOPMENT LENGTHS & LAP SPLICES SCHEDULES
NO SCALE

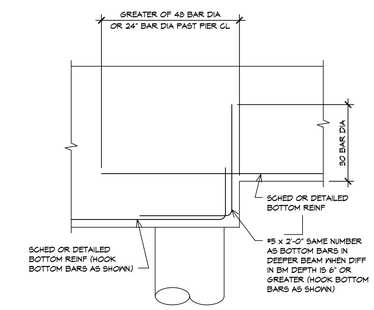

ELEVATION

14 TYPICAL DROP IN BOTTOM OF GRADE BEAM DETAIL
NO SCALE

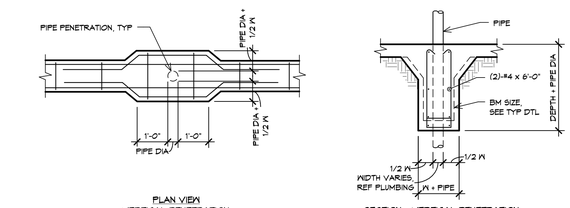

PLAN VIEW
VERTICAL PENETRATION

SECTION - VERTICAL PENETRATION

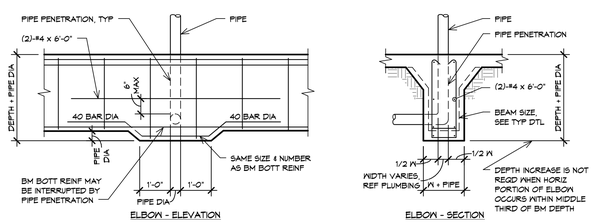

ELBOW - ELEVATION

ELBOW - SECTION

NOTES:

1. THIS DETAIL APPLIES TO HORIZ PENETRATIONS THAT OCCUR OUTSIDE OF THE MIDDLE THIRD OF THE BM DEPTH AND TO ALL VERT PENETRATIONS AND ALL ELBOWS. FOR HORIZ BM PENETRATIONS THAT OCCUR IN THE MIDDLE THIRD OF THE BM DEPTH, SEE DETAIL 7/S402 .
2. PERIMETER BM PENETRATION SHALL BE SLEEVED.
3. FOR PIPE SLEEVES LARGER THAN 4" OD, ADJACENT PIPE PENETRATIONS SHALL HAVE A MINIMUM CLR OF THE LARGER PIPE SLEEVE DIA BTWN THEM.

12 TYPICAL GRADE BEAM PENETRATION
NO SCALE

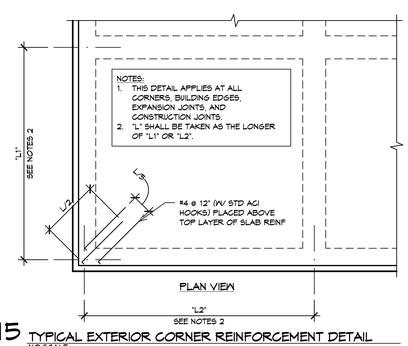

15 TYPICAL EXTERIOR CORNER REINFORCEMENT DETAIL
NO SCALE

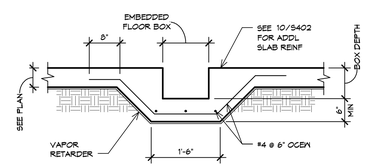

16 TYPICAL THICKENED SLAB-ON-GRADE FOR EMBEDDED FLOOR BOX
NO SCALE

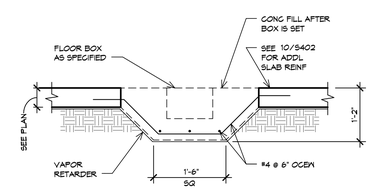

17 TYPICAL THICKENED SLAB-ON-GRADE FOR EMBEDDED FLOOR BOX
NO SCALE

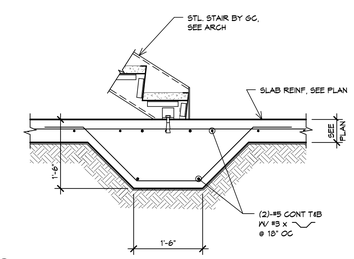

18 DETAIL AT BASE OF STAIR
NO SCALE

muñoz & company
1017 NORTH MAIN SUITE 300
SAN ANTONIO, TEXAS 78212
O. 210.349.1163 F. 210.525.1038
W W W . M U N O Z - C O . C O M

INTELLIGENT ENGINEERING SERVICES
ENGINEERING COMMUNITIES FROM THE GROUND UP
200 S. 10TH STREET, SUITE 1204 McALLEN, TEXAS 78501
956.682.4645 ie-services.com
IES JOB NO. 3180027 TBPE FIRM F-482

STATE OF TEXAS
JASON D. IRISH
94227
LICENSED
PROFESSIONAL ENGINEER
11-08-18

UTRGV
The University of Texas Rio Grande Valley

UNIVERSITY OF TEXAS RIO GRANDE VALLEY
SCHOOL OF MEDICINE
TEAM BASED LEARNING CENTER
PROJECT NO: 903-1159
EDINBURG, TX
100% CONSTRUCTION DOCUMENTS

Issue/Revision

#	DESCRIPTION	DATE

Sheet Title
CONCRETE TYPICAL DETAILS

Date
NOVEMBER 08, 2018

Project Number	Drawn By	Checked By
A17021.00	IES STAFF	JDI

Sheet Number
S402

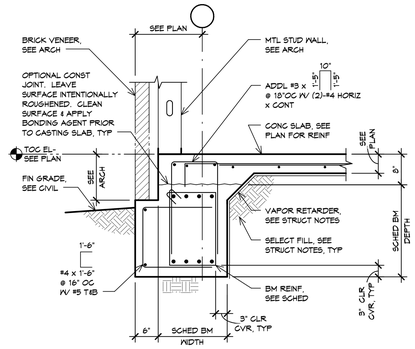

1 TYPICAL PERIMETER SECTION
NO SCALE

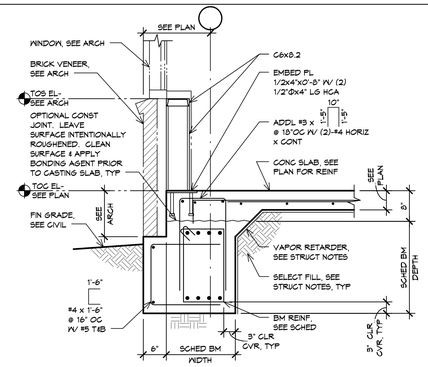

2 TYPICAL PERIMETER SECTION AT WINDOW SILL GREATER THAN 8 FEET
SCALE: 3/4" = 1'-0"

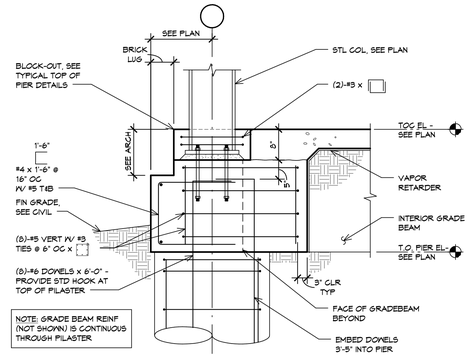

3 SECTION
NO SCALE

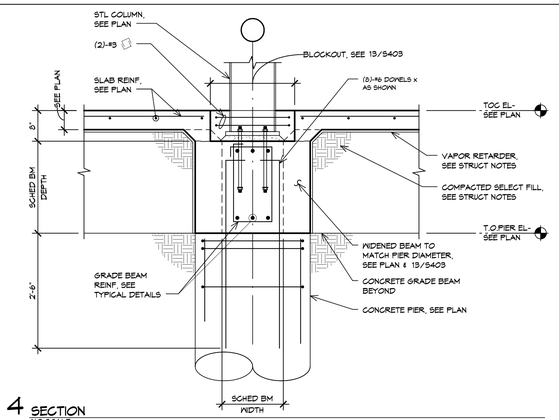

4 SECTION
NO SCALE

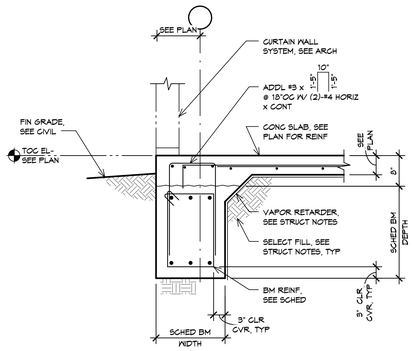

5 SECTION
SCALE: 3/4" = 1'-0"

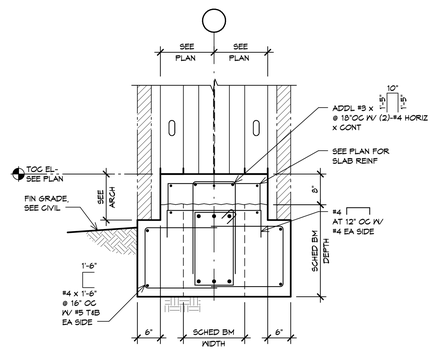

6 SECTION
SCALE: 3/4" = 1'-0"

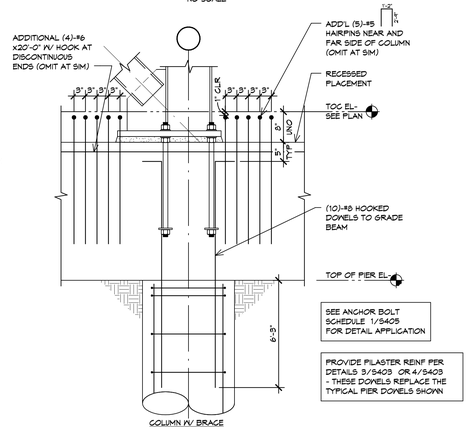

7 TYPICAL GRADE BEAM TO PIER DETAIL AT BRACED FRAME COLUMNS
SCALE: 3/4" = 1'-0"

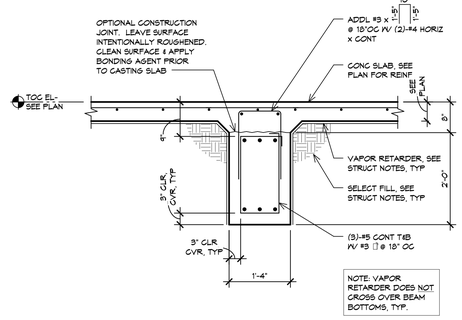

8 TYPICAL INTERIOR GRADE BEAM
SCALE: 3/4" = 1'-0"

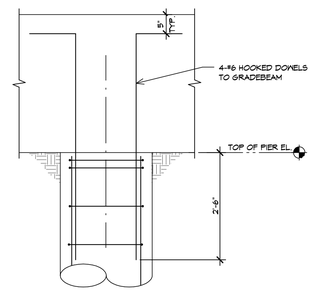

9 TYPICAL GRADE BEAM TO PIER DETAIL
NO SCALE

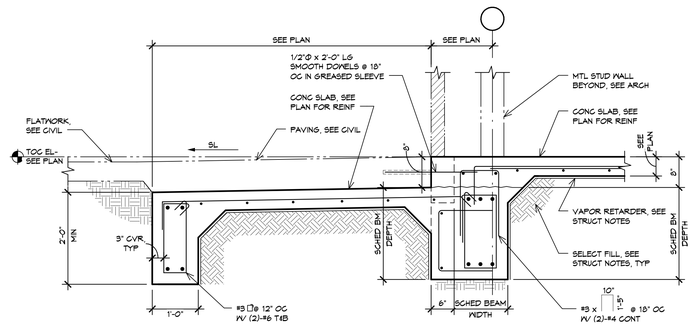

10 SECTION
NO SCALE

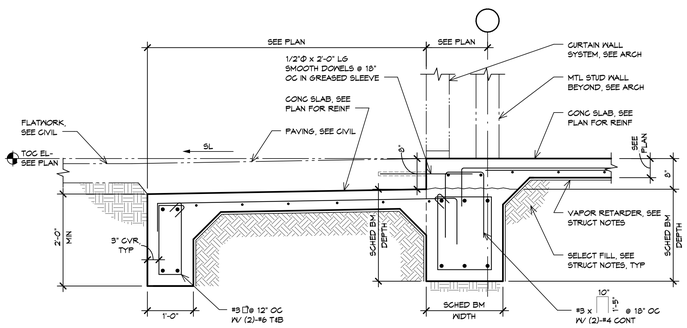

11 SECTION
SCALE: 3/4" = 1'-0"

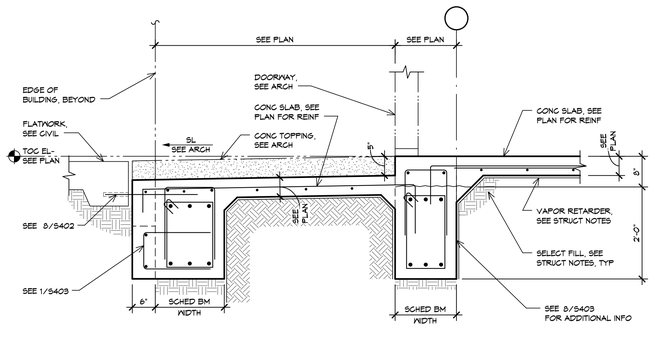

12 SECTION
SCALE: 3/4" = 1'-0"

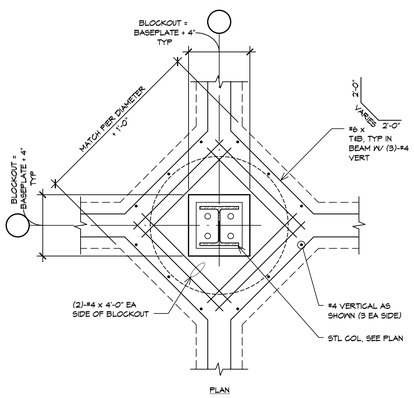

13 TYPICAL INTERIOR WIDENED BEAM AND BLOCKOUT DETAIL
SCALE: 3/4" = 1'-0"

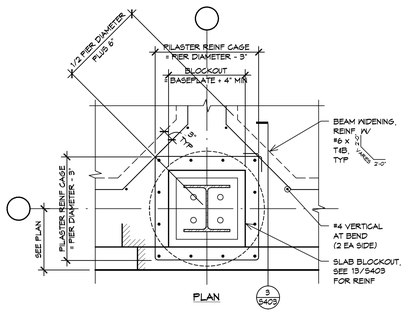

14 TYPICAL EXTERIOR TOP OF PIER DETAIL
SCALENO SCALE

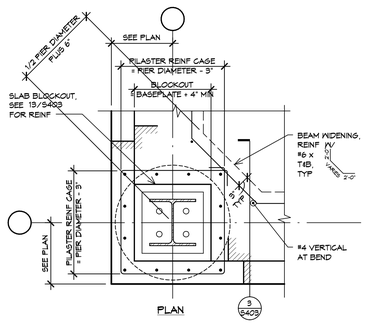

15 TYPICAL EXTERIOR TOP OF PIER DETAIL
SCALENO SCALE

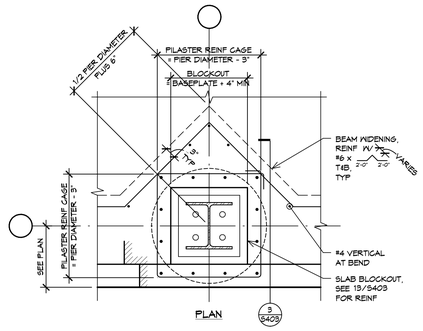

16 TYPICAL EXTERIOR TOP OF PIER DETAIL
SCALENO SCALE

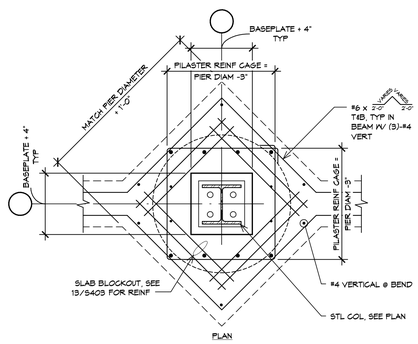

17 TYPICAL INTERIOR WIDENED BEAM AND BLOCKOUT DETAIL
SCALE: 3/4" = 1'-0"

muñoz & company
1017 NORTH MAIN SUITE 300
SAN ANTONIO, TEXAS 78212
O. 210.349.1163 F. 210.525.1038
W W W . M U N O Z - C O . C O M

INTELLIGENT ENGINEERING SERVICES
ENGINEERING COMMUNITIES FROM THE GROUND UP
200 S. 10TH STREET, SUITE 1204 McALLEN, TEXAS 78501
956.682.4645 ie-services.com
IES JOB NO: 318000127 TBPE FIRM F-482

STATE OF TEXAS
JASON D. IRISH
94227
LICENSED
PROFESSIONAL ENGINEER
11-08-18

UTRGV
The University of Texas Rio Grande Valley

UNIVERSITY OF TEXAS RIO GRANDE VALLEY
SCHOOL OF MEDICINE
TEAM BASED LEARNING CENTER
PROJECT NO: 903-1159
EDINBURG, TX
100% CONSTRUCTION DOCUMENTS

Issue/Revision

#	DESCRIPTION	DATE

Sheet Title
CONCRETE SECTIONS & DETAILS

Date
NOVEMBER 08, 2018

Project Number	Drawn By	Checked By
A17021.00	IES STAFF	JDI

Sheet Number
S403

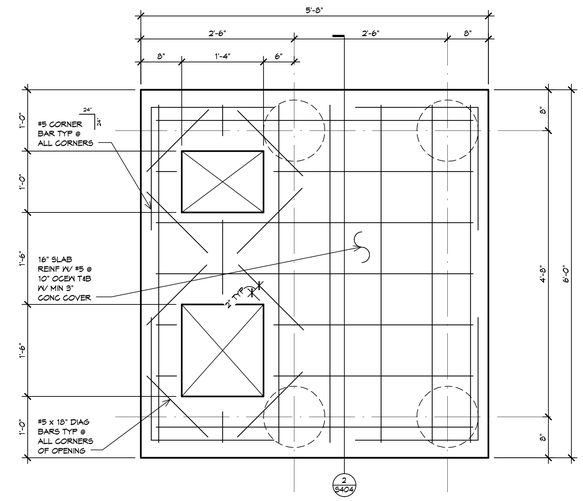

1 DETAIL TRANSFORMER PAD
SCALE: 1" = 1'-0"

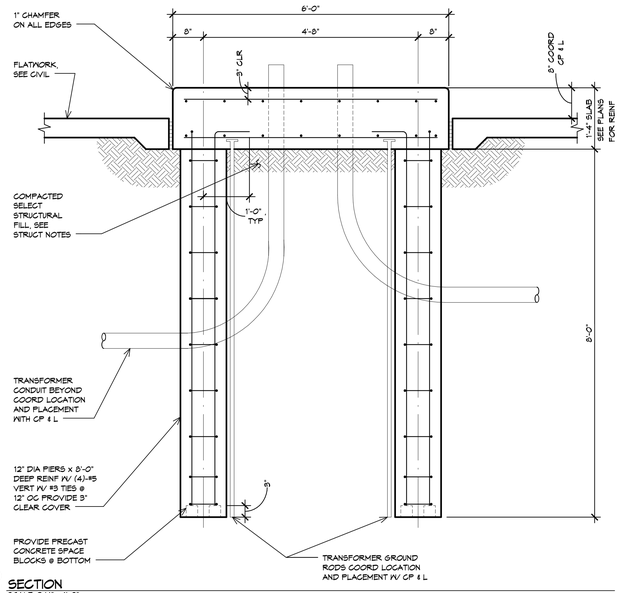

2 SECTION
SCALE: 3/4" = 1'-0"

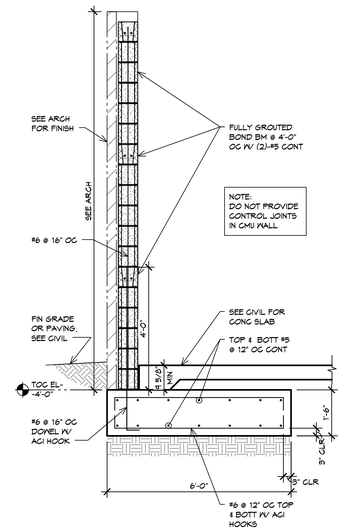

3 SECTION
SCALE: 1/2" = 1'-0"

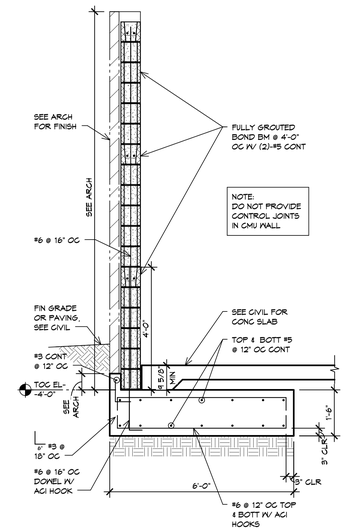

4 SECTION
SCALE: 1/2" = 1'-0"

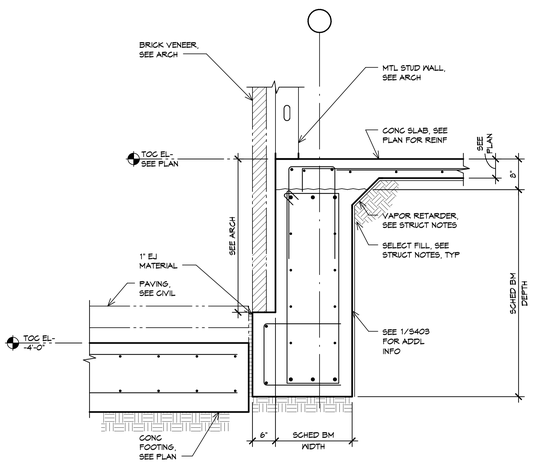

5 SECTION
SCALE: 3/4" = 1'-0"

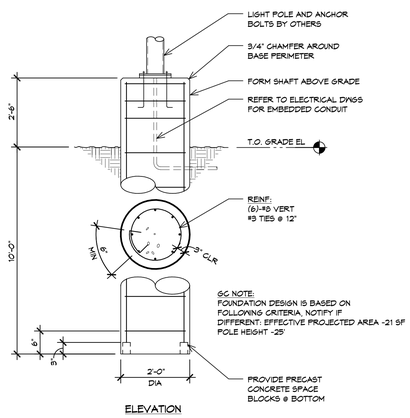

6 TYPICAL LIGHTPOLE FOUNDATION DETAIL
NO SCALE

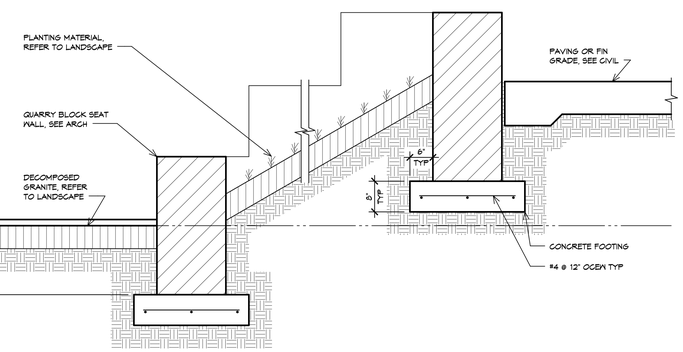

7 TYPICAL SEAT WALL FOOTING DETAILS
SCALE: 3/4" = 1'-0"

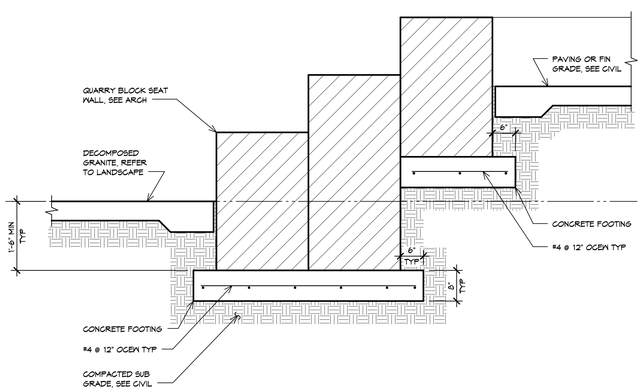

8 TYPICAL SEAT WALL FOOTING DETAILS
SCALE: 3/4" = 1'-0"

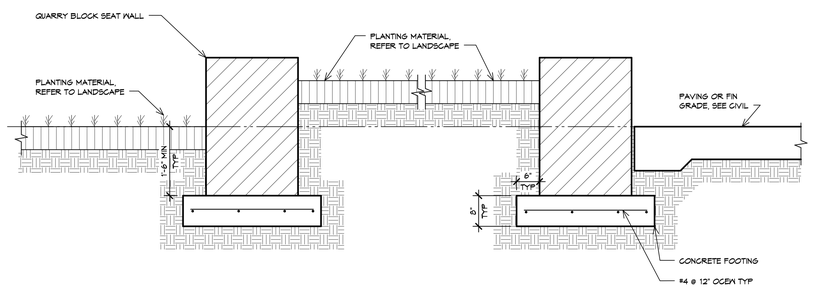

9 TYPICAL SEAT WALL FOOTING DETAILS
SCALE: 3/4" = 1'-0"

muñoz & company
1017 NORTH MAIN SUITE 300
SAN ANTONIO, TEXAS 78212
O. 210.349.1163 F. 210.525.1038
W W W . M U N O Z - C O . C O M

INTELLIGENT ENGINEERING SERVICES
ENGINEERING COMMUNITIES FROM THE GROUND UP
200 S. 10TH STREET, SUITE 1204 MCALLEN, TEXAS 78501
956.682.4645 ies@iesfirm.com
IES JOB NO: 3180027 TBPE FIRM F-432

STATE OF TEXAS
JASON D. IRISH
94227
LICENSED
PROFESSIONAL ENGINEER

11-08-18

UTRGV
The University of Texas Rio Grande Valley

UNIVERSITY OF TEXAS RIO GRANDE VALLEY
SCHOOL OF MEDICINE
TEAM BASED LEARNING CENTER
PROJECT NO: 903-1159
EDINBURG, TX
100% CONSTRUCTION DOCUMENTS

Issue/Revision

#	DESCRIPTION	DATE

Sheet Title
CONCRETE SECTIONS & DETAILS

Date
NOVEMBER 08, 2018

Project Number	Drawn By	Checked By
A17021.00	IES STAFF	JDI

Sheet Number
S404

BASE PLATE & ANCHOR BOLT SCHEDULE											
MARK	BASE PLATE DIMENSIONS					DETAIL	ANCHOR BOLTS			TYPE	ASTM F1554 GRADE (KSI)
	V	W	Y	Z	T		NO/TYPE	DIA	EMBED LENGTH		
BP-A	16"	12"	3"	3 1/2"	1"	2/S405	2A	3/4"	1'-0"	AB-1	36
BP-B	16"	12"	3 "	3 1/2"	2"	2/S405	2B	1 1/2"	2'-0"	AB-1	36
BP-C	16"	14"	3"	3 1/2"	2"	2/S405	2C	1 1/2"	2'-0"	AB-1	36
BP-D	13 1/2"	13 1/2"	3 1/2"	6 1/2"	1"	2/S405	2D	3/4"	1'-0"	AB-1	36

1 BASE PLATE AND ANCHOR BOLT SCHEDULE
SCALE: 3/4" = 1'-0"

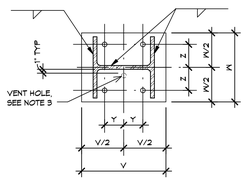

BASE PLATE TYPE - 2A

NOTES:

1. WELD TO BE MINIMUM SIZE REQUIRED BY AISC FOR THICKNESS OF BASE PLATE USED (3/16" MINIMUM).
2. SEE DETAIL 3/S405 FOR BASE PLATE ELEVATION.
3. PROVIDE 1 1/2" DIAMETER VENT HOLE IN BASEPLATES WHERE BOTH V AND W DIMENSIONS ARE GREATER THAN 16".

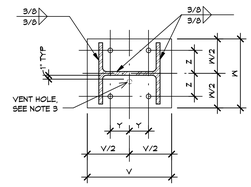

BASE PLATE TYPE - 2B

NOTES:

1. SEE DETAIL 3/S405 FOR BASE PLATE ELEVATION.
2. PROVIDE 1 1/2" DIAMETER VENT HOLE IN BASEPLATES WHERE BOTH V AND W DIMENSIONS ARE GREATER THAN 16".
3. SEE 7/S403 S/M FOR DOWEL INFO.

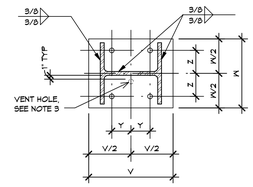

BASE PLATE TYPE - 2C

NOTES:

1. SEE DETAIL 4/S405 FOR BASE PLATE ELEVATION.
2. PROVIDE 1 1/2" DIAMETER VENT HOLE IN BASEPLATES WHERE BOTH V AND W DIMENSIONS ARE GREATER THAN 16".
3. SEE 7/S403 FOR DOWEL INFO.

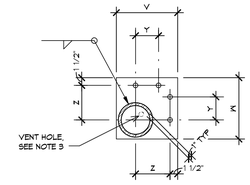

BASE PLATE TYPE - 2D

NOTES:

1. WELD TO BE 1/16" SMALLER THAN THICKNESS OF TUBE (3/16" MINIMUM).
2. SEE DETAIL 3/S405 FOR BASE PLATE ELEVATION.
3. PROVIDE 1 1/2" DIAMETER VENT HOLE IN BASEPLATES WHERE BOTH V AND W DIMENSIONS ARE GREATER THAN 16".

2 TYPICAL BASE PLATE DETAIL
SCALE: 3/4" = 1'-0"

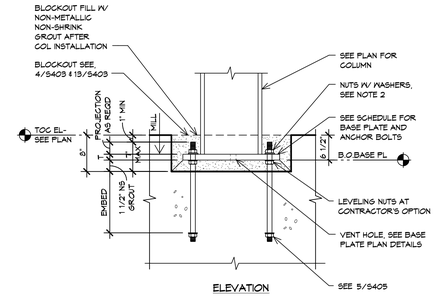

ELEVATION

NOTES:

1. CONTRACTOR SHALL PROVIDE THE ONE SIDE FINISH ALLOWANCE TO SCHEDULED BASE PLATE THICKNESS PER AISC STEEL CONSTRUCTION MANUAL,14TH EDITION TABLE 14-1.
2. CONTRACTOR MAY PROVIDE PLATE WASHERS AND OVERSIZED HOLES IN BASE PLATE PER AISC STEEL CONSTRUCTION MANUAL, 14TH EDITION TABLE 14-2. CONTRACTOR SHALL PROVIDE PLATE WASHERS MEETING THE TABULATED MINIMUM SIZE AND THICKNESS OR LARGER.

3 TYPICAL COLUMN BASE PLATE DETAIL
SCALE: 3/4" = 1'-0"

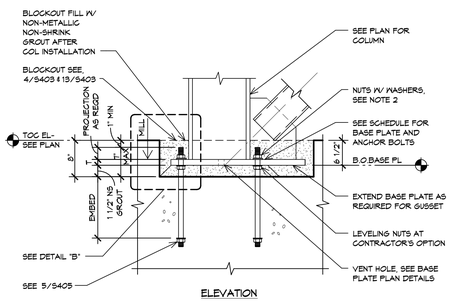

ELEVATION

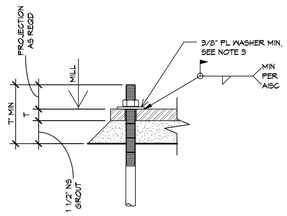

DETAIL "B"

NOTES:

1. SEE BRACE ELEVATIONS AND STRUCTURAL NOTES FOR FORCES AND CONNECTION DESIGN CRITERIA.
2. CONTRACTOR SHALL PROVIDE THE ONE SIDE FINISH ALLOWANCE TO SCHEDULED BASE PLATE THICKNESS PER AISC STEEL CONSTRUCTION MANUAL,14TH EDITION TABLE 14-1.
3. CONTRACTOR MAY PROVIDE PLATE WASHERS AND OVERSIZED HOLES IN BASE PLATE PER AISC STEEL CONSTRUCTION MANUAL, 14TH EDITION TABLE 14-2. CONTRACTOR SHALL PROVIDE PLATE WASHERS MEETING THE TABULATED MINIMUM SIZE AND THICKNESS OR LARGER.

4 TYPICAL COLUMN BASE PLATE DETAIL
SCALE: 3/4" = 1'-0"

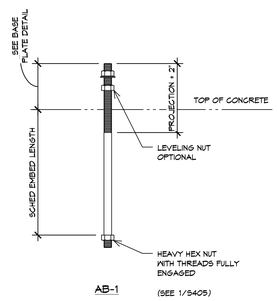

AB-1

5 TYPICAL ANCHOR BOLT TYPES
NO SCALE

muñoz & company
1017 NORTH MAIN SUITE 300
SAN ANTONIO, TEXAS 78212
O. 210.349.1163 F. 210.525.1038
W W W . M U N O Z - C O . C O M

INTELLIGENT ENGINEERING SERVICES
ENGINEERING COMMUNITIES FROM THE GROUND UP
200 S. 10TH STREET, SUITE 1204 McALLEN, TEXAS 78501
956.682.4645 ie-services.com
IES JOB NO: 3180027 TBPE FIRM F-432

STATE OF TEXAS
JASON D. IRISH
94227
LICENSED
PROFESSIONAL ENGINEER
11-08-18

UTRGV
The University of Texas Rio Grande Valley

UNIVERSITY OF TEXAS RIO GRANDE VALLEY
SCHOOL OF MEDICINE
TEAM BASED LEARNING CENTER
PROJECT NO: 903-1159
EDINBURG, TX
100% CONSTRUCTION DOCUMENTS

Issue/Revision

#	DESCRIPTION	DATE

Sheet Title
BASE PLATES

Date
NOVEMBER 08, 2018

Project Number	Drawn By	Checked By
A17021.00	IES STAFF	JDI

Sheet Number
S405

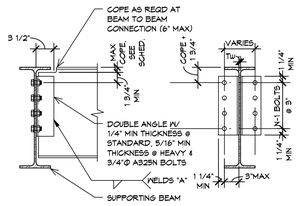

WELDS "A" (3 SIDES)
STANDARD CONN - 3/16"
HEAVY CONN - 1/4"

MIN WEB THICKNESS "Tw"
STANDARD CONN - 0.286"
HEAVY CONN - 0.381"

WELDED/BOLTED CONNECTION
- TOP FLANGE COPED

BEAM SIZE	MAX COPE DEPTH	STANDARD NO. OF ROWS OF BOLTS (N)	STANDARD LRFD - MAX BEAM REACTION (KIPS)	HEAVY NO. OF ROWS OF BOLTS (N)	HEAVY LRFD - MAX BEAM REACTION (KIPS)
W8	1"	2	14	-	N.A.
W10	1 1/2"	2	23	-	N.A.
W12	1 1/2"	2	36	3	36
W14	1 1/2"	3	54	-	N.A.
W16	2"	3	76	4	80
W18	2 1/2"	3	76	4	101
W21	3 1/2"	4	101	5	125
W24	3 1/2"	5	125	6	149
W27	5"	5	125	6	149
W30	5"	6	149	7	174
W33	5"	7	174	8	198
W36	5"	8	198	9	222
W40	5"	9	222	10	246
W44	5"	10	246	11	271

NOTES:

A. CONTRACTOR SHALL PROVIDE SIGNED & SEALED CALCULATIONS FOR ANY CONNECTION THAT CAN NOT BE SELECTED FROM THE PROVIDED TABLES IN STRUCTURAL DRAWINGS. CONNECTION ANGLES AND WELDS SHALL NOT BE LESS THAN THAT SHOWN.

B. RIGHT ANGLE CONNECTIONS SHALL BE DOUBLE ANGLE AS SCHEDULED. SKEWED CONNECTIONS SHALL BE BENT DOUBLE ANGLES OR BENT PLATES. SEE 1/S501 .

C. NOTED REACTIONS ARE FOR ULTIMATE DESIGN STRENGTH LOADS (LRFD).

D. SEE STRUCTURAL NOTES SECTION "STRUCTURAL STEEL CONNECTIONS" FOR ADDITIONAL INFORMATION.

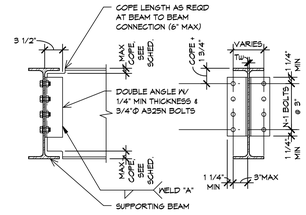

WELDS "A" (3 SIDES)
STANDARD CONN - 3/16"
HEAVY CONN - 1/4"

MIN WEB THICKNESS "Tw"
STANDARD CONN - 0.286"
HEAVY CONN - 0.381"

WELDED/BOLTED CONNECTION
- BOTH FLANGES COPED

BEAM SIZE	MAX COPE DEPTH	STANDARD NO. OF ROWS OF BOLTS (N)	STANDARD LRFD - MAX BEAM REACTION (KIPS)	HEAVY NO. OF ROWS OF BOLTS (N)	HEAVY LRFD - MAX BEAM REACTION (KIPS)
W8	1"	2	8	-	N.A.
W10	1 1/2"	2	12	-	N.A.
W12	1 1/2"	2	22	3	22
W14	1 1/2"	3	36	-	N.A.
W16	1 1/2"	3	55	4	55
W18	1 1/2"	3	76	4	88
W21	2"	4	101	5	125
W24	2"	5	125	6	149
W27	2"	5	125	7	174
W30	2"	6	149	8	198
W33	2 1/2"	7	174	9	222
W36	2 1/2"	8	198	10	246
W40	3"	9	222	11	271
W44	3"	10	246	12	295

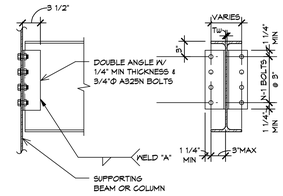

WELDS "A" (3 SIDES)
STANDARD CONN - 3/16"
HEAVY CONN - 1/4"

MIN WEB THICKNESS "Tw"
STANDARD CONN - 0.286"
HEAVY CONN - 0.381"

WELDED/BOLTED CONNECTION - UNCOPED

BEAM SIZE	STANDARD NO. OF ROWS OF BOLTS (N)	STANDARD LRFD - MAX BEAM REACTION (KIPS)	HEAVY NO. OF ROWS OF BOLTS (N)	HEAVY LRFD - MAX BEAM REACTION (KIPS)
W8	2	34	-	N.A.
W10	2	49	-	N.A.
W12	2	49	3	67
W14	3	76	-	N.A.
W16	3	76	4	101
W18	3	76	5	125
W21	4	101	6	149
W24	5	125	7	174
W27	5	125	7	174
W30	6	149	8	198
W33	7	174	9	222
W36	8	198	10	246
W40	9	222	11	271
W44	10	246	12	295

1 TYPICAL STEEL BEAM TO COLUMN AND BEAM TO BEAM CONNECTION DETAILS
NO SCALE

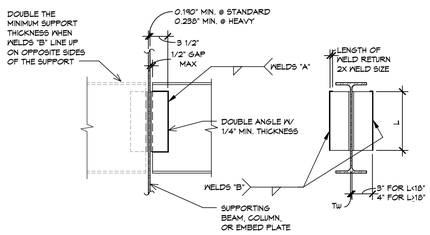

WELDS "A" (3 SIDES)
STANDARD CONN. - 3/16"
HEAVY CONN. - 3/16"
WELDS "B" (3 SIDES)
STANDARD CONN. - 1/4"
HEAVY CONN. - 5/16"

MIN WEB THICKNESS "Tw"
STANDARD CONN - 0.286"
HEAVY CONN - 0.381"

ALL WELDED CONNECTION - UNCOPED

BEAM SIZE	STANDARD LENGTH OF ANGLE (L)	STANDARD LRFD - MAX. BEAM REACTION (KIPS)	HEAVY LENGTH OF ANGLE (L)	HEAVY LRFD - MAX. BEAM REACTION (KIPS)
W8	4"	15	4"	29
W10	5"	23	6"	40
W12	6"	32	8"	66
W14	8"	53	10"	64
W16	8"	53	10"	64
W18	8"	53	10"	64
W21	10"	75	12"	124
W24	12"	98	14"	154
W27	16"	148	18"	196
W30	18"	151	20"	223
W33	22"	205	24"	257
W36	24"	229	26"	274
W40	24"	229	28"	291
W44	24"	229	28"	291

NOTES:

1. CONTRACTOR SHALL PROVIDE SIGNED & SEALED CALCULATIONS FOR ANY CONNECTION THAT CAN NOT BE SELECTED FROM THE PROVIDED TABLES IN STRUCTURAL DRAWINGS. CONNECTION ANGLES AND WELDS SHALL NOT BE LESS THAN THAT SHOWN.
2. RIGHT ANGLE CONNECTIONS SHALL BE DOUBLE ANGLE AS SCHEDULED. SKEWED CONNECTIONS SHALL BE BENT DOUBLE ANGLES OR BENT PLATES. SEE 1/S501.
3. NOTED REACTIONS ARE FOR ULTIMATE DESIGN STRENGTH LOADS (LRFD)
4. SEE STRUCTURAL NOTES SECTION "STRUCTURAL STEEL CONNECTIONS" FOR ADDITIONAL INFORMATION.

2 TYPICAL WELDED DOUBLE ANGLE CONNECTION DETAIL
NO SCALE

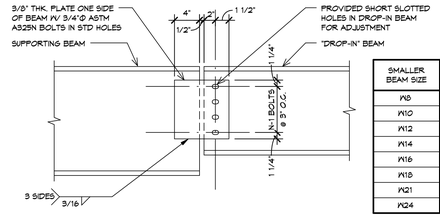

SMALLER BEAM SIZE	NO. OF ROWS OF BOLTS (N)	LRFD - MAX. BEAM REACTION (KIPS)
W8	2	17
W10	2	17
W12	3	39
W14	3	39
W16	4	56
W18	4	56
W21	5	66
W24	5	66

NOTES:

1. CONTRACTOR SHALL PROVIDE SIGNED & SEALED CALCULATIONS FOR ANY CONNECTION THAT CAN NOT BE SELECTED FROM THE PROVIDED TABLES IN STRUCTURAL DRAWINGS.
2. NOTED REACTIONS ARE FOR ULTIMATE DESIGN STRENGTH LOADS (LRFD).
3. SEE STRUCTURAL NOTES SECTION "STRUCTURAL STEEL CONNECTIONS" FOR ADDITIONAL INFORMATION.

3 TYPICAL WELDED/ BOLTED SINGLE PLATE BEAM SPLICE DETAIL
NO SCALE

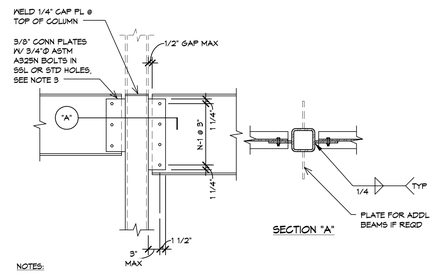

SECTION "A"

BEAM SIZE	PLATE LENGTH (L)	# OF BOLTS (N)	MAX FACTORED BEAM REACTIONS (KIPS)
W8	5 1/2"	2	14
W10	5 1/2"	2	14
W12	8 1/2"	3	32
W14	8 1/2"	3	32
W16	11 1/2"	4	51
W18	14 1/2"	5	71
W21	17 1/2"	6	90
W24	17 1/2"	6	90
W27	20 1/2"	7	109
W30	23 1/2"	8	128
W33	26 1/2"	9	146
W36	29 1/2"	10	164
W40	32 1/2"	11	181
W44	35 1/2"	12	198

NOTES:

1. CONNECTIONS SHALL DESIGNED FOR THE REACTIONS SHOWN ON PLANS BY THE CONTRACTOR'S LICENSED ENGINEER OR SELECTED FROM THE ABOVE TABLE IF SHEAR REACTION SHOWN ON PLANS IS LESS THAN THE TABULATED MAXIMUM FACTORED BEAM REACTION AND NO OTHER REACTIONS ARE INDICATED. TABLE ABOVE ONLY APPLIES IF ALL OF THE FOLLOWING ARE MET:

   A. COLUMN WALL THICKNESS IS 1/4" OR GREATER.
   B. BEAM IS PERPENDICULAR TO COLUMN.
   C. BEAM FLANGES ARE UNCOPED.
   D. CONNECTION PLATE IS GRADE 36.

2. NOTED REACTIONS ARE FOR ULTIMATE DESIGN STRENGTH LOADS.(LRFD).
3. PROVIDE SHORT SLOTTED HOLES IN CONNECTION PLATE WHEN N > 5 AND ELSEWHERE AT CONTRACTOR OPTION.
4. BOLTS ARE 3/4" DIAMETER ASTM A325N, TYPICAL.
5. SEE "STRUCTURAL STEEL CONNECTIONS" IN THE STRUCTURAL NOTES FOR ADDITIONAL INFORMATION.

4 TYPICAL BEAM WEB TO TUBE COLUMN CONNECTION
NO SCALE

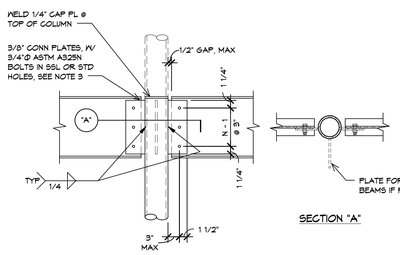

SECTION "A"

BEAM SIZE	PLATE LENGTH (L)	# OF BOLTS (N)	MAX FACTORED BEAM REACTIONS (KIPS)
W8	5 1/2"	2	14
W10	5 1/2"	2	14
W12	8 1/2"	3	32
W14	8 1/2"	3	32
W16	11 1/2"	4	51
W18	14 1/2"	5	71
W21	17 1/2"	6	90
W24	17 1/2"	6	90
W27	20 1/2"	7	109
W30	23 1/2"	8	128
W33	26 1/2"	9	146
W36	29 1/2"	10	164
W40	32 1/2"	11	181
W44	35 1/2"	12	198

NOTES:

1. CONNECTIONS SHALL DESIGNED FOR THE REACTIONS SHOWN ON PLANS BY THE CONTRACTOR'S LICENSED ENGINEER OR SELECTED FROM THE ABOVE TABLE. IF SHEAR REACTION SHOW ON PLANS IS LESS THAN THE TABULATED MAXIMUM FACTORED BEAM REACTION AND NO OTHER REACTIONS ARE INDICATED. TABLE ABOVE ONLY APPLIES IF ALL OF THE FOLLOWING ARE MET:

   A. COLUMN WALL THICKNESS IS 1/4" OR GREATER.
   B. BEAM IS PERPENDICULAR TO COLUMN.
   C. BEAM FLANGES ARE UNCOPED.
   D. CONNECTION PLATE IS GRADE 36.

2. NOTED REACTIONS ARE FOR ULTIMATE DESIGN STRENGTH LOADS (LRFD).
3. PROVIDE SHORT SLOTTED HOLES IN CONNECTION PLATE WHEN N > 5 AND ELSEWHERE AT CONTRACTOR OPTION.
4. BOLTS ARE 3/4" DIAMETER ASTM A325N, TYPICAL.
5. SEE "STRUCTURAL STEEL CONNECTIONS" IN THE STRUCTURAL NOTES.FOR ADDITIONAL INFORMATION.

5 TYPICAL BEAM WEB TO PIPE COLUMN CONNECTION
NO SCALE

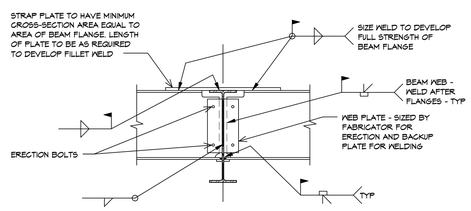

6 TYPICAL MOMENT CONNECTION DETAIL
NO SCALE

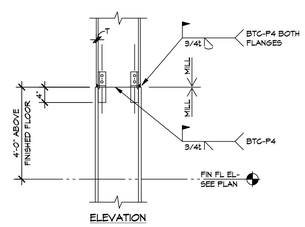

ELEVATION

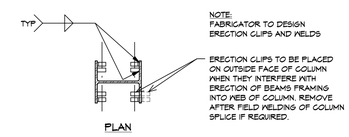

PLAN

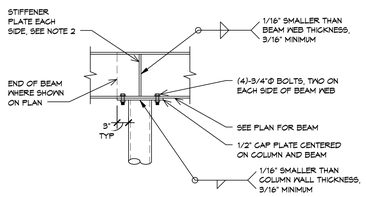

NOTES:

1. SEE ROOF PLAN FOR ROOF SLOPE. SLOPE CAP PLATES ACCORDINGLY.
2. STIFFENER PLATES SHALL BE EQUAL IN THICKNESS TO THE COLUMN WALL THICKNESS OR BEAM WEB THICKNESS, WHICHEVER IS GREATER (3/8" MINIMUM).
3. CONNECT INTERSECTING BEAMS TO STIFFENER PLATES USING BOLTS IN SINGLE SHEAR DESIGNED FOR ECCENTRIC BEAM REACTION.10/S501.

9 TYPICAL CAP PLATE - BOLTED CONNECTION DETAIL
NO SCALE

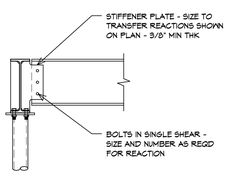

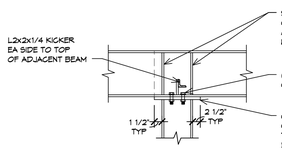

COLUMN WEB PARALLEL TO BEAM

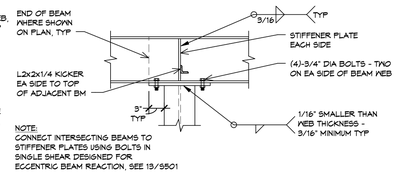

NOTE:
CONNECT INTERSECTING BEAMS TO STIFFENER PLATES USING BOLTS IN SINGLE SHEAR DESIGNED FOR ECCENTRIC BEAM REACTION, SEE 13/S501

COLUMN WEB PERPENDICULAR TO BEAM

NOTE:
SEE ROOF PLAN FOR ROOF SLOPE AND SLOPE CAP PLATES ACCORDINGLY.

7 TYPICAL SKEWED SIMPLE FRAMING CONNECTIONS DETAIL
NO SCALE

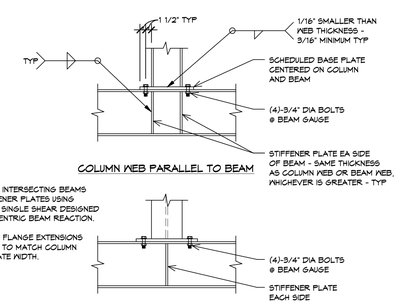

COLUMN WEB PARALLEL TO BEAM

NOTES:

1. CONNECT INTERSECTING BEAMS TO STIFFENER PLATES USING BOLTS IN SINGLE SHEAR DESIGNED FOR ECCENTRIC BEAM REACTION.
2. PROVIDE FLANGE EXTENSIONS AS REQD TO MATCH COLUMN BASE PLATE WIDTH.

COLUMN WEB PERPENDICULAR TO BEAM

8 TYPICAL COLUMN SPLICE DETAIL (COLUMNS OF SAME NOMINAL DEPTH)
NO SCALE

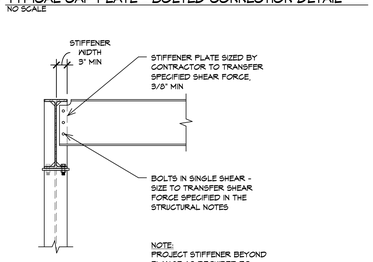

NOTE:
PROJECT STIFFENER BEYOND FLANGE AS REQUIRED TO MAINTAIN MIN STIFFENER WIDTH OF 3"

12 TYPICAL COLUMN SUPPORTED ON BEAM CONNECTION DETAIL
NO SCALE

11 TYPICAL COLUMN CAP PLATE TO BEAM CONNECTION DETAIL
NO SCALE

10 TYPICAL BOLTED SIMPLE BEAM TO GIRDER WEB CONNECTION AT COLUMN BRACING
NO SCALE

13 TYPICAL BOLTED SIMPLE BEAM TO BEAM WEB CONNECTION AT COLUMN CAP DETAIL
NO SCALE

muñoz & company
1017 NORTH MAIN SUITE 300
SAN ANTONIO, TEXAS 78212
O. 210.349.1163 F. 210.525.1038
W W W . M U N O Z - C O . C O M

INTELLIGENT ENGINEERING SERVICES
ENGINEERING COMMUNITIES FROM THE GROUND UP
200 S. 10TH STREET, SUITE 1204 McALLEN, TEXAS 78501
956.682.4645 ie-services.com
IES JOB NO.:3180027 TBPE FIRM F-432

STATE OF TEXAS
JASON D. IRISH
94227
LICENSED
PROFESSIONAL ENGINEER
11-08-18

UTRGV
The University of Texas Rio Grande Valley

UNIVERSITY OF TEXAS RIO GRANDE VALLEY
SCHOOL OF MEDICINE
TEAM BASED LEARNING CENTER
PROJECT NO: 903-1159
EDINBURG, TX
100% CONSTRUCTION DOCUMENTS

Issue/Revision

#	DESCRIPTION	DATE

Sheet Title
TYPICAL STEEL DETAILS

Date
NOVEMBER 08, 2018

Project Number	Drawn By	Checked By
A17021.00	IES STAFF	JDI

Sheet Number
S501

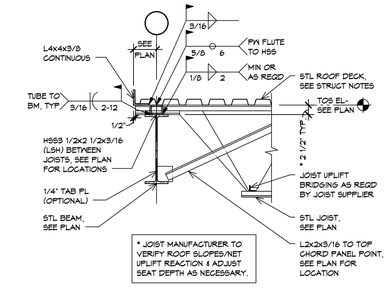

1 TYPICAL KCS OR K SERIES STEEL JOIST BEARING ON PERIMETER BEAM DETAIL
NO SCALE

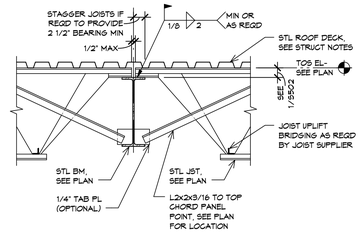

2 TYPICAL KCS OR K SERIES STEEL JOIST BEARING ON INTERIOR BEAM DETAIL
NO SCALE

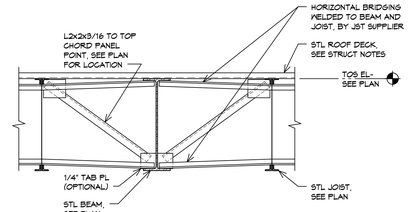

3 TYPICAL BEAM PARALLEL TO JOISTS DETAIL
NO SCALE

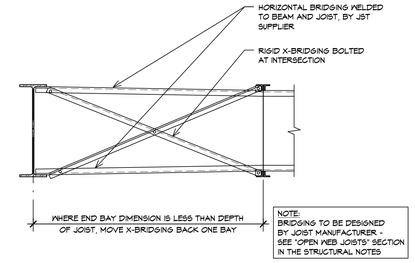

4 TYPICAL CROSS-BRIDGING AT END BAY FOR K AND KCS SERIES JOISTS DETAIL
NO SCALE

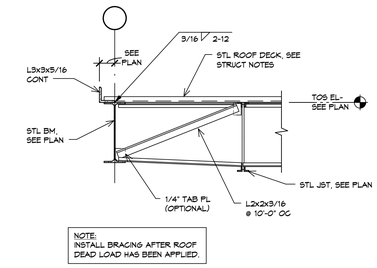

5 TYPICAL PERIMETER BEAM PARALLEL TO JOISTS DETAIL
NO SCALE

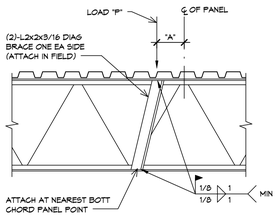

LOAD ON TOP CHORD

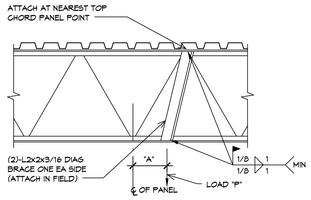

LOAD ON BOTTOM CHORD

NOTES:

1. THESE DETAILS APPLY WHEREVER A CONCENTRATED LOAD GREATER THAN 100 POUNDS OCCURS BETWEEN PANEL POINTS OF TRUSS OR JOIST CHORDS.
2. DIAGONAL BRACE IS NOT REQUIRED FOR "A" LESS THAN THREE INCHES.
3. PROVIDE DIAGONAL BRACE AT LOCATION OF CONCENTRATED LOADS SUCH AS PARTITIONS, HEAVY PIPES, MECHANICAL UNITS, HEAVY LIGHTS, SPORTS EQUIPMENT AND ANY OTHER CONCENTRATED LOADS.
4. P = CONCENTRATED LOAD.
5. FOR POINT LOADS 200 POUNDS MAX, LOADS GREATER THAN 200 POUNDS WILL BE NOTED ON PLANS.

6 TYPICAL JOIST CHORD REINFORCEMENT DETAIL
NO SCALE

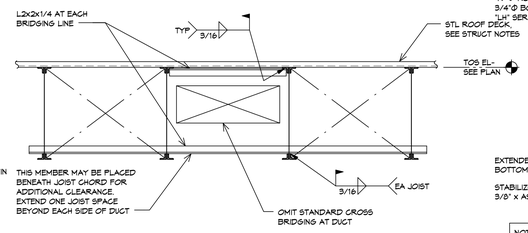

7 TYPICAL DUCT OPENING AT CROSS BRIDGING DETAIL
NO SCALE

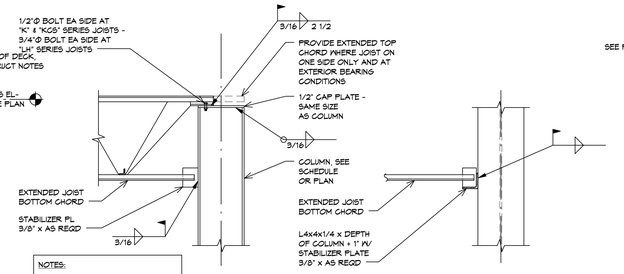

NOTES:

1. DO NOT WELD BOTTOM CHORD OF JOIST TO COLUMN.
2. SEE PLAN FOR COLUMN ORIENTATION.

8 TYPICAL JOIST TO COLUMN CONNECTION WITH EXTENDED BOTTOM CHORD DETAIL
NO SCALE

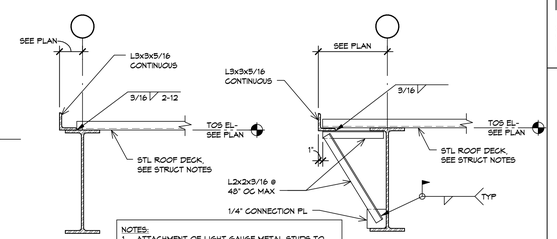

NOTES:

1. ATTACHMENT OF LIGHT GAUGE METAL STUDS TO ROOF EDGE ANGLE PER COLD FORM DESIGNER.
2. USE SECTION "B" WHEN MIN OVERLAP OF ANGLE ON BEAM OF 1" CANNOT BE MAINTAINED.
3. IF THE DIMENSION FROM CENTER OF BEAM TO EDGE OF DECK ANGLE IS 6" OR LESS AND THE MIN. OVERLAP CANNOT BE ACHEVED THEN PROVIDE A BENT PLATE WITH ENOUGH HORIZ. LEG TO ACHIEVE 1" MIN. OVERLAP.

9 TYPICAL EXTERIOR BEAM PARALLEL TO JOISTS DETAIL
NO SCALE

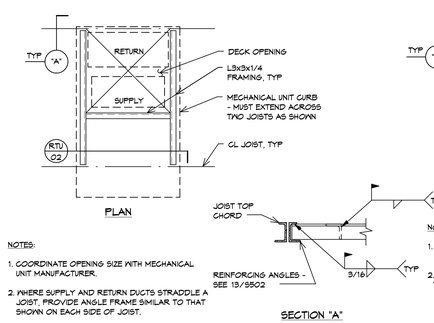

NOTES:

1. COORDINATE OPENING SIZE WITH MECHANICAL UNIT MANUFACTURER.
2. WHERE SUPPLY AND RETURN DUCTS STRADDLE A JOIST, PROVIDE ANGLE FRAME SIMILAR TO THAT SHOWN ON EACH SIDE OF JOIST.
3. THIS DETAIL APPLIES ONLY TO THE CASE WHERE THE RTU CURBS EXTEND ACROSS TWO JOISTS

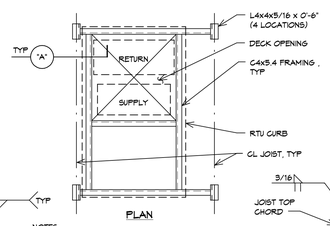

NOTES:

1. COORDINATE FRAME AND OPENING SIZE WITH MECHANICAL UNIT MANUFACTURER.
2. THIS DETAIL APPLIES ONLY TO THE CASE WHERE THE RTU CURBS SET BETWEEN TWO JOISTS.

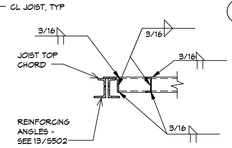

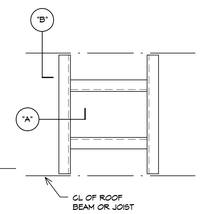

NOTE:
INSTALL FRAME AT ALL ROOF OPENINGS INCLUDING ROOF DRAINS.

10 TYPICAL SCHEMATIC ROOFTOP MOUNTED MECHANICAL UNIT OPENING FRAMING DETAILS
NO SCALE

11 TYPICAL ROOF OPENING DETAIL
NO SCALE

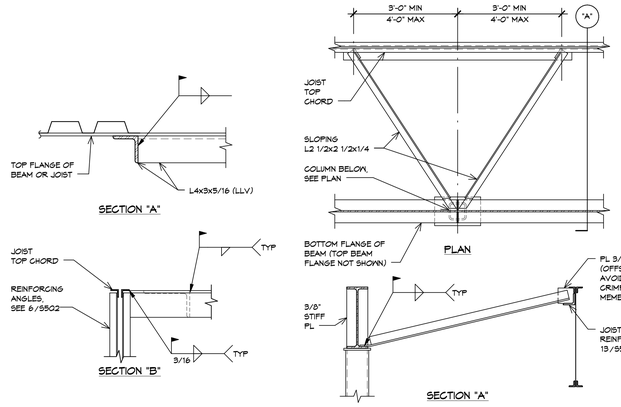

12 TYPICAL COLUMN BRACE DETAIL - JOISTS PARALLEL TO BEAM
NO SCALE

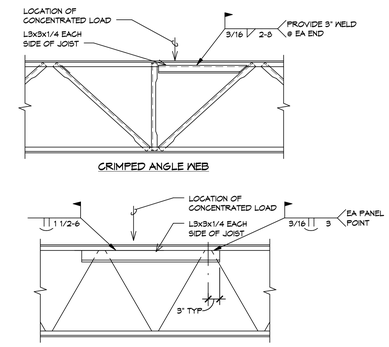

NOTES:

1. TOP CHORD SHALL BE REINFORCED PER 6/S502 UNLESS INDICATED OTHERWISE IN SECTIONS AND DETAILS. THIS TYPICAL DETAIL APPLIES AT SPECIFIC LOCATIONS ONLY.
2. ALL HANGERS OR ATTACHMENTS TO JOISTS SHALL BE PLACED CONCENTRIC WITH THE TOP CHORD, AND SHALL NOT ATTACH TO ONLY ONE ANGLE OF CHORD.
3. CONCENTRATED LOAD SHALL BE 1000 LBS MAXIMUM.

13 TYPICAL TOP CHORD REINFORCEMENT FOR KCS OR K-SERIES JOISTS DETAIL
NO SCALE

NOTES AT STEEL FRAMING:

1. THE PROVIDED HANGING PIPE LOAD SCHEDULE TABULATES THE WEIGHT OF SCHEDULE 40 STEEL AND PVC PIPES INCLUDING THE WEIGHT OF WATER PER LINEAR FOOT. THE CONTRACTOR SHALL ARRANGE PIPES AND HANGERS SUCH THAT INDIVIDUAL HANGER LOADS ARE LESS THAN 400#. HANGER LOADS OF 400# MUST BE SPACED AT 8 FEET OR GREATER. LESSER PIPE HANGING LOADS MAY BE SPACED CLOSER THAN 8 FEET ON CENTER, BUT TOTAL HANGING LOAD IN LOCALIZED AREA SHALL NOT EXCEED 8 POUNDS PER SQUARE FOOT.
2. WHEN THE PIPES RUN PERPENDICULAR TO THE JOISTS, SUPPORT THE PIPES WITH A HANGER TO EVERY BEAM OR JOISTS CROSSED IN ACCORDANCE WITH THE REQUIREMENTS OF NOTE 1; WHEN MULTIPLE PIPES ARE SUPPORTED USE TRAPEZE HANGERS WITH A MINIMUM OF TWO HANGERS.
3. WHEN THE PIPES RUN PARALLEL TO THE JOISTS HANG THE PIPES WITH TRAPEZE HANGERS SUPPORTED FROM A MINIMUM OF TWO JOISTS. TRAPEZE HANGERS SHALL BE SPACED SUCH THAT LOAD ON EACH HANGER MEETS THE REQUIREMENTS OF NOTE 1.
4. ATTACH ALL HANGERS TO THE CHORDS OF OPEN WEB STEEL JOISTS AT A PANEL POINT OR REINFORCE STEEL JOIST AS NOTED IN DETAIL 6/S502 .

ELECTRICAL CONDUIT AND CABLE TRAYS:
1. ELECTRICAL CONDUIT AND CABLE TRAYS SHALL BE PLACED PER NOTES ABOVE. VERTICAL LOAD AT HANGERS SHALL NOT EXCEED 400#.

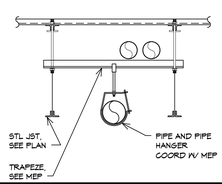

HANGING PIPE LOAD SCHEDULE
(SCHEDULE 40 WITH WEIGHT OF WATER INCLUDED)

NOMINAL PIPE DIAMETER	POUNDS PER LINEAR FOOT					
	STEEL			PVC		
	1 PIPE	2 PIPES	3 PIPES	1 PIPE	2 PIPES	3 PIPES
1"	2.1	4.1	6.2	0.7	1.4	2.1
1 1/2"	3.6	7.2	10.8	1.4	2.8	4.2
2"	5.1	10.2	15.4	2.1	4.3	6.4
2 1/2"	7.9	15.8	23.6	3.2	6.3	9.5
3"	10.8	21.6	32.4	4.6	9.3	13.9
3 1/2"	13.4	26.8	40.2	6.0	12.0	18.0
4"	16.3	32.7	49.0	7.6	15.1	22.7
5"	23.3	46.6	69.8	11.4	22.9	34.3
6"	31.5	63.1	94.6	16.1	32.2	48.3
8"	50.3	100.5	150.8	27.1	54.2	81.3
10"	74.5	149.1	223.6	41.8	83.7	125.5
12"	93.6	187.2	280.8	58.6	117.3	175.9

14 MEP HANGER SUPPORT UNDER 400# HANGING LOAD
NO SCALE

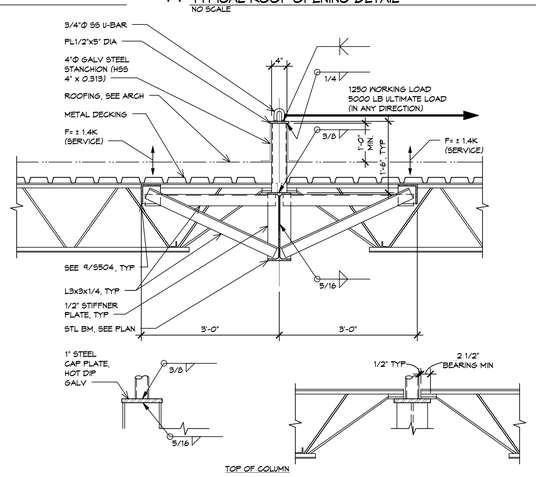

15 FALL PROTECTION ANCHOR SECTION
NO SCALE

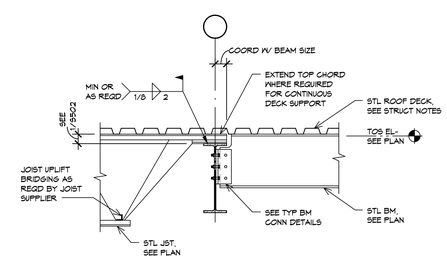

16 TYPICAL EXTENDED TOP CHORD FOR DECK SUPPORT DETAIL
NO SCALE

muñoz & company
1017 NORTH MAIN SUITE 300
SAN ANTONIO, TEXAS 78212
O. 210.349.1163 F. 210.525.1038
W W W . M U N O Z - C O . C O M

INTELLIGENT ENGINEERING SERVICES
ENGINEERING COMMUNITIES FROM THE GROUND UP
200 S. 10TH STREET, SUITE 1204 MCALLEN, TEXAS 78501
956.682.4645 ie-services.com
IES JOB NO. 3180027 TBPE FIRM F-482

STATE OF TEXAS
JASON D. IRISH
94227
LICENSED
PROFESSIONAL ENGINEER
11-08-18

UTRGV
The University of Texas Rio Grande Valley

UNIVERSITY OF TEXAS RIO GRANDE VALLEY
SCHOOL OF MEDICINE
TEAM BASED LEARNING CENTER
EDINBURG, TX
PROJECT NO: 903-1159
100% CONSTRUCTION DOCUMENTS

Issue/Revision

#	DESCRIPTION	DATE

Sheet Title
TYPICAL STEEL DETAILS

Date
NOVEMBER 08, 2018

Project Number	Drawn By	Checked By
A17021.00	IES STAFF	JDI

Sheet Number
S502

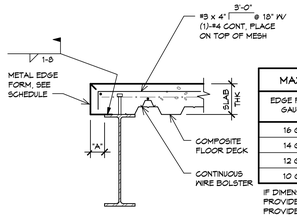

MAXIMUM SLAB OVERHANG - "A"			
EDGE FORM GAUGE	SLAB THICKNESS		
	4 1/2"	5 1/2"	6 1/2"
16 GA	4 1/2"	3"	1 1/2"
14 GA	6"	4 1/2"	3"
12 GA	9 1/2"	8"	6"
10 GA	12"	11"	9 1/2"

IF DIMENSION "A" EXCEEDS TABLE MAXIMUMS, PROVIDE ANGLE SUPPORT, PER DETAIL 2/S503
PROVIDE 1/2" RETURN LIP ON EDGE FORMS.

1 TYPICAL COMPOSITE SLAB EDGE CONDITION DETAIL
NO SCALE

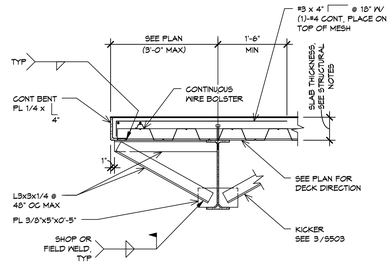

2 TYPICAL CANTILEVERED SLAB EDGE DETAIL
NO SCALE

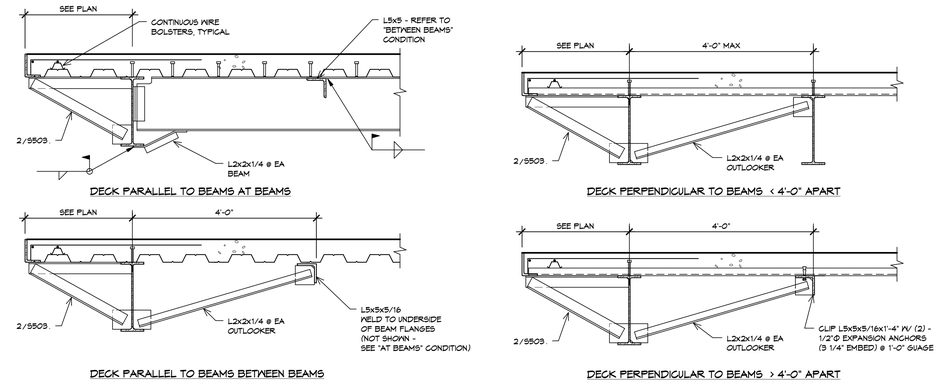

3 COMPOSITE SLAB CANTILEVERED EDGE CONDITION
NO SCALE

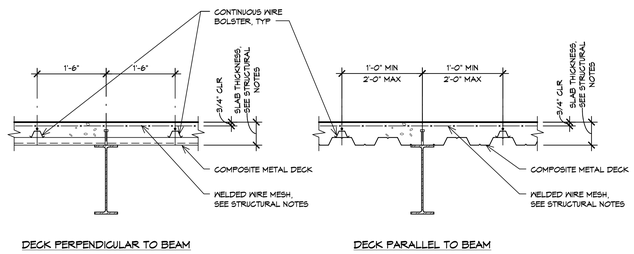

4 TYPICAL COMPOSITE DECK DETAIL
NO SCALE

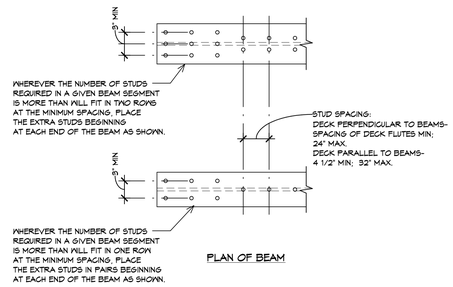

5 TYPICAL SHEAR STUD PLACEMENT DIAGRAM DETAIL
NO SCALE

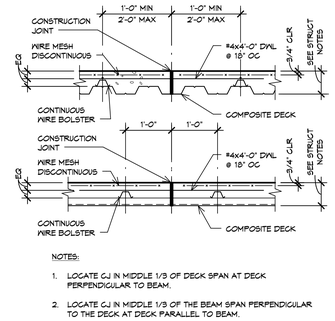

NOTES:

1. LOCATE CJ IN MIDDLE 1/3 OF DECK SPAN AT DECK PERPENDICULAR TO BEAM.
2. LOCATE CJ IN MIDDLE 1/3 OF THE BEAM SPAN PERPENDICULAR TO THE DECK AT DECK PARALLEL TO BEAM.

6 TYPICAL CONSTRUCTION JOINT IN COMPOSITE SLAB DETAIL
NO SCALE

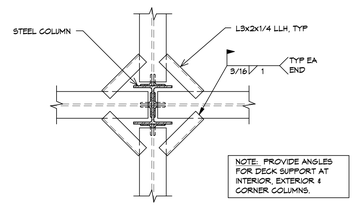

7 TYPICAL DECK SUPPORT AT COLUMN DETAIL
NO SCALE

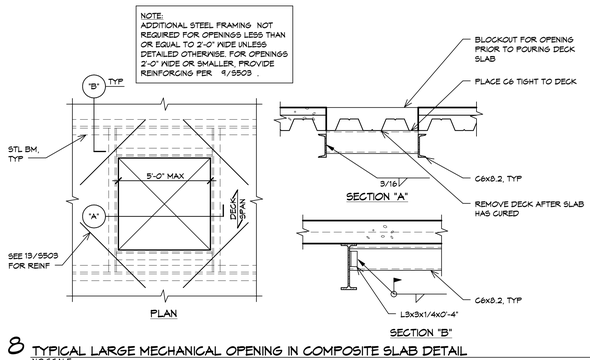

8 TYPICAL LARGE MECHANICAL OPENING IN COMPOSITE SLAB DETAIL
NO SCALE

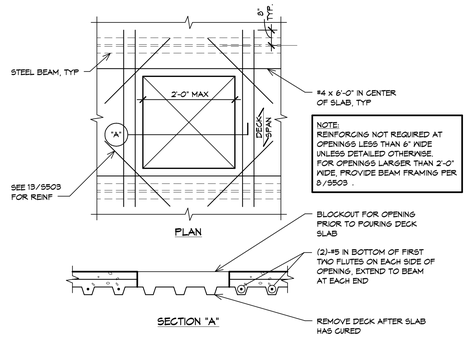

9 TYPICAL SMALL MECHANICAL OPENING IN COMPOSITE SLAB DETAIL
NO SCALE

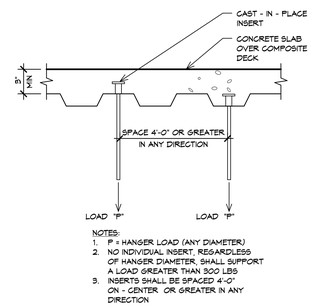

10 TYPICAL CAST-IN-PLACE INSERT FOR MEP HANGER SUPPORT UNDER 300# HANGING LOAD
NO SCALE

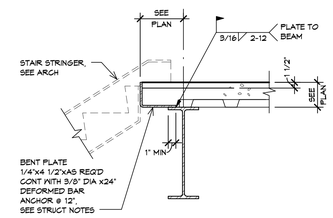

11 TYPICAL EDGE CONDITION AT STAIR STRINGERS
NO SCALE

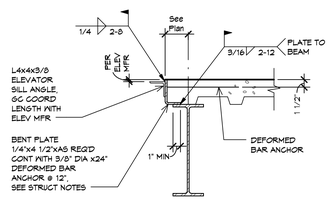

12 TYPICAL EDGE CONDITION ELEVATOR SILL DETAIL
NO SCALE

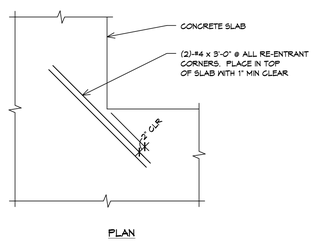

13 TYPICAL SLAB RE-ENTRANT CORNER REINFORCING DETAIL
NO SCALE

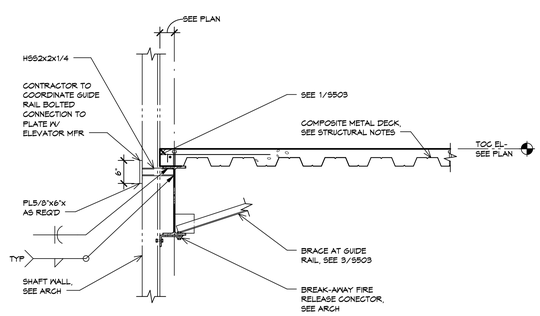

14 TYPICAL FACADE SHELF ANGLE AT SECOND LEVEL PARALLEL TO DECK DETAIL
SCALE: 3/4" = 1'-0"

muñoz & company
1017 NORTH MAIN SUITE 300
SAN ANTONIO, TEXAS 78212
O. 210.349.1163 F. 210.525.1038
W W W . M U N O Z - C O . C O M

INTELLIGENT ENGINEERING SERVICES
ENGINEERING COMMUNITIES FROM THE GROUND UP
200 S. 10TH STREET, SUITE 1204 McALLEN, TEXAS 78501
956.682.4645 ie-services.com
IES JOB NO.:3180027 TBPE FIRM F-432

STATE OF TEXAS
JASON D. IRISH
94227
LICENSED PROFESSIONAL ENGINEER
11-08-18

UTRGV
The University of Texas Rio Grande Valley

UNIVERSITY OF TEXAS RIO GRANDE VALLEY
SCHOOL OF MEDICINE
TEAM BASED LEARNING CENTER
PROJECT NO: 903-1159
EDINBURG, TX
100% CONSTRUCTION DOCUMENTS

Issue/Revision

#	DESCRIPTION	DATE

Sheet Title
TYPICAL STEEL DETAILS

Date
NOVEMBER 08, 2018

Project Number	Drawn By	Checked By
A17021.00	IES STAFF	JDI

Sheet Number
S503

MASONRY LOOSE LINTEL SCHEDULE		
OPENING	LINTEL SIZE	DETAIL
LESS THAN 2'-0"	L3 1/2x2 1/2x1/4 (LLH)	
2'-0" TO LESS THAN 6'-0"	L3 1/2x3 1/2x5/16	
6'-0" TO LESS THAN 8'-0"	L4x3 1/2x5/16 (LLV)	
8'-0" TO LESS THAN 8'-0"	L5x3 1/2x5/16 (LLV)	

NOTES:

1. SEE ARCHITECTURAL DRAWINGS FOR SIZE AND LOCATION OF OPENINGS.
2. PROVIDE 1" OF BEARING AT EACH JAMB FOR EACH FOOT OF CLEAR SPAN, BUT NOT LESS THAN 6".
3. WHERE MINIMUM BEARING CANNOT BE ACHIEVED, PROVIDE ADEQUATE CONNECTION TO ADJACENT STRUCTURAL MEMBER OR PROVIDE SEPARATE VERTICAL SUPPORT. SUBMIT SUCH DETAILS FOR ENGINEER'S APPROVAL.
4. ALL LINTELS SHALL BE HOT-DIP GALVANIZED AFTER FABRICATION.
5. FOR MASONRY OPENING LARGER THAN 8'-0", REFER TO ENGINEER.
6. BRICK HEIGHTS OVER OPENINGS GREATER THAN ONE HALF THE LINTEL SPAN SHALL BE SHORED UNTIL MORTAR HAS SET AND CURED.

1 MASONRY LOOSE LINTEL SCHEDULE
NO SCALE

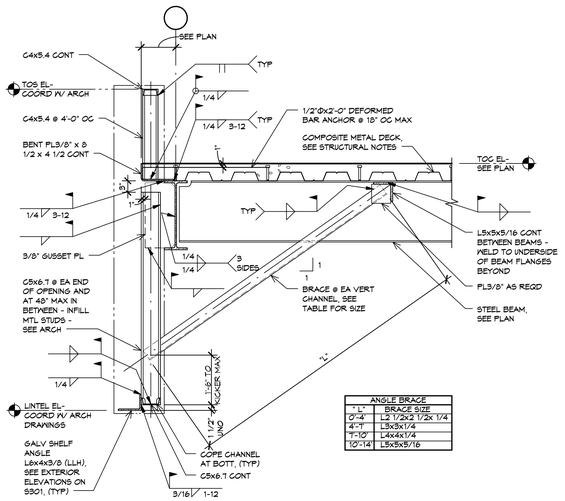

ANGLE BRACE	
"L"	BRACE SIZE
0'-4'	L2 1/2x2 1/2x 1/4
4'-7'	L3x3x1/4
7'-10'	L4x4x1/4
10'-14'	L5x5x5/16

2 TYPICAL FACADE PERPENDICULAR TO BEAM DETAIL
SCALE: 3/4" = 1'-0"

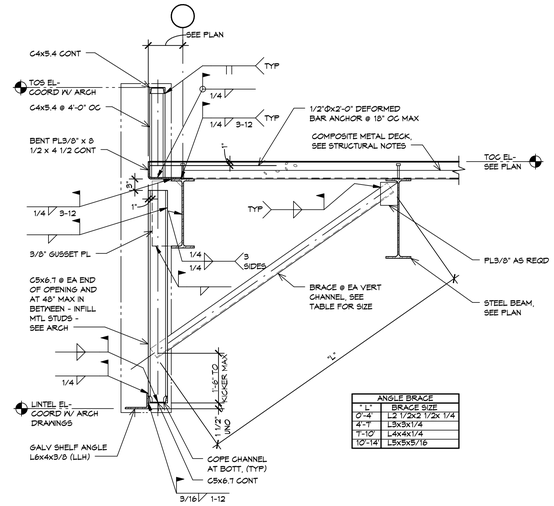

ANGLE BRACE	
"L"	BRACE SIZE
0'-4'	L2 1/2x2 1/2x 1/4
4'-7'	L3x3x1/4
7'-10'	L4x4x1/4
10'-14'	L5x5x5/16

3 TYPICAL FACADE PARALLEL TO BEAM DETAIL
SCALE: 3/4" = 1'-0"

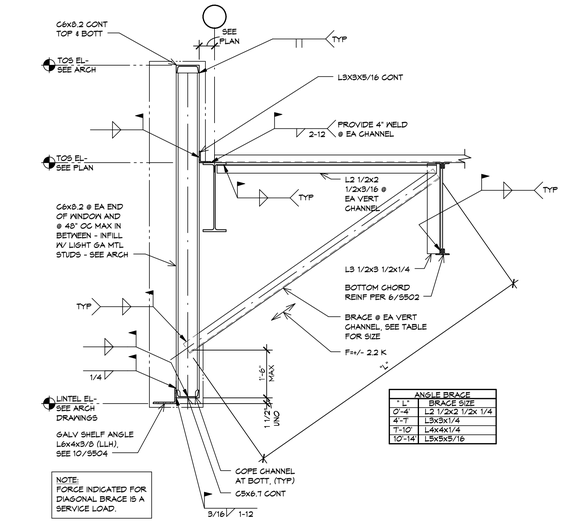

ANGLE BRACE	
"L"	BRACE SIZE
0'-4'	L2 1/2x2 1/2x 1/4
4'-7'	L3x3x1/4
7'-10'	L4x4x1/4
10'-14'	L5x5x5/16

NOTE:
FORCE INDICATED FOR DIAGONAL BRACE IS A SERVICE LOAD.

4 TYPICAL FACADE PARALLEL TO JOIST DETAIL
SCALE: 3/4" = 1'-0"

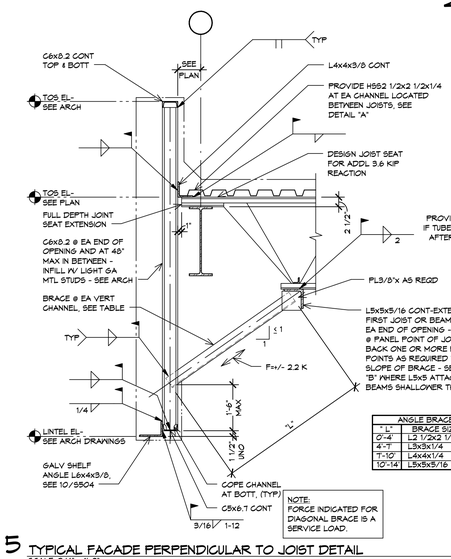

ANGLE BRACE	
"L"	BRACE SIZE
0'-4'	L2 1/2x2 1/2x 1/4
4'-7'	L3x3x1/4
7'-10'	L4x4x1/4
10'-14'	L5x5x5/16

NOTE:
FORCE INDICATED FOR DIAGONAL BRACE IS A SERVICE LOAD.

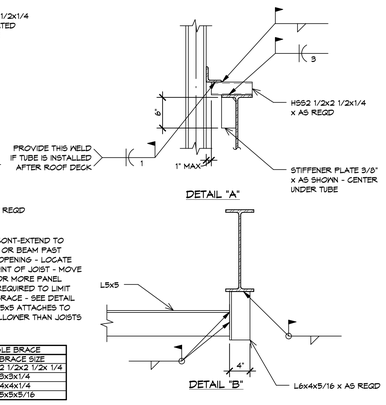

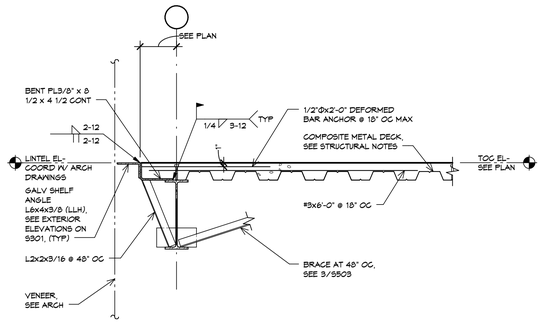

6 TYPICAL FACADE SHELF ANGLE AT SECOND LEVEL PARALLEL TO DECK DETAIL
NO SCALE

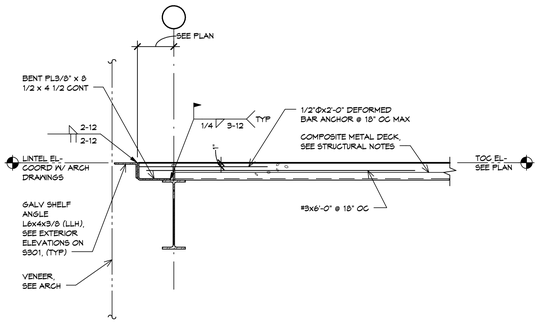

7 TYPICAL FACADE SHELF ANGLE AT SECOND LEVEL PERPENDICULAR TO DECK DETAIL
NO SCALE

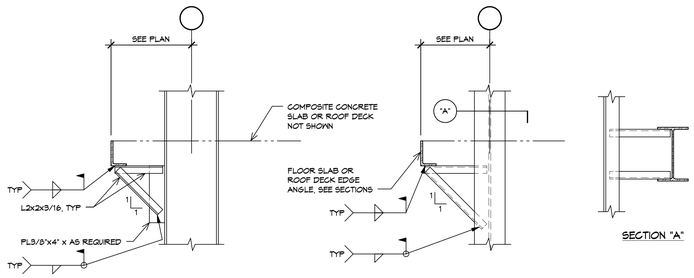

COLUMN WEB PERPENDICULAR TO SPANDREL

COLUMN WEB PARALLEL TO SPANDREL

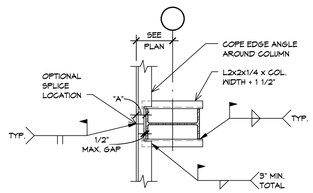

COLUMN FLANGE INTERFERES WITH CONTINUOUS EDGE ANGLE

8 TYPICAL EDGE ANGLE SUPPORT AT COLUMN DETAIL
NO SCALE

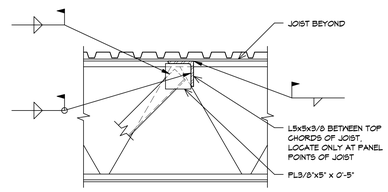

9 TYPICAL BRACE AT JOIST PANEL POINT DETAIL
NO SCALE

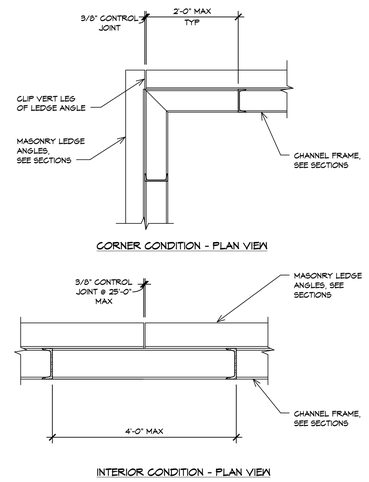

CORNER CONDITION - PLAN VIEW

INTERIOR CONDITION - PLAN VIEW

10 TYPICAL LEDGE ANGLE CONTROL JOINT DETAIL - CHANNEL FRAME CONDITION
NO SCALE

muñoz & company
1017 NORTH MAIN SUITE 300
SAN ANTONIO, TEXAS 78212
O. 210.349.1163 F. 210.525.1038
W W W . M U N O Z - C O . C O M

INTELLIGENT ENGINEERING SERVICES
ENGINEERING COMMUNITIES FROM THE GROUND UP
200 S. 10TH STREET, SUITE 1204 MCALLEN, TEXAS 78501
956.682.4645 ie-services.com
IES JOB NO. 318OO27 TBPE FIRM F-482

STATE OF TEXAS
JASON D. IRISH
94227
LICENSED
PROFESSIONAL ENGINEER
11-08-18

UTRGV
The University of Texas Rio Grande Valley

UNIVERSITY OF TEXAS RIO GRANDE VALLEY
SCHOOL OF MEDICINE
TEAM BASED LEARNING CENTER
PROJECT NO: 903-1159
EDINBURG, TX
100% CONSTRUCTION DOCUMENTS

Issue/Revision		
#	DESCRIPTION	DATE

Sheet Title
TYPICAL STEEL DETAILS

Date
NOVEMBER 08, 2018

Project Number	Drawn By	Checked By
A17021.00	IES STAFF	JDI

Sheet Number
S504

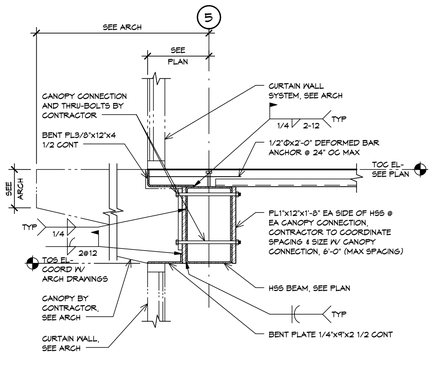

1 SECTION
SCALE: 3/4" = 1'-0"

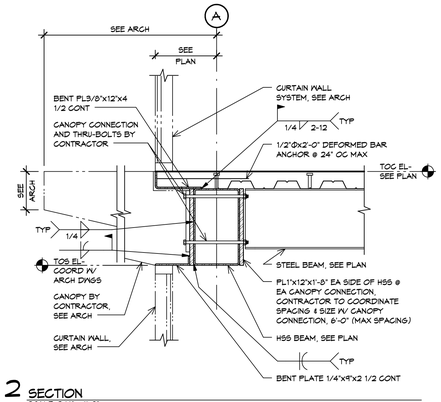

2 SECTION
SCALE: 3/4" = 1'-0"

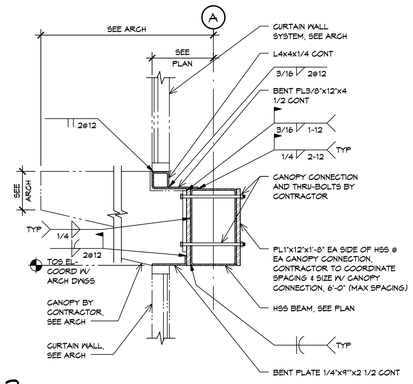

3 SECTION
SCALE: 3/4" = 1'-0"

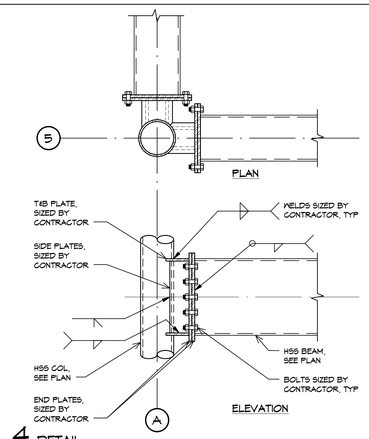

4 DETAIL
SCALE: 3/4" = 1'-0"

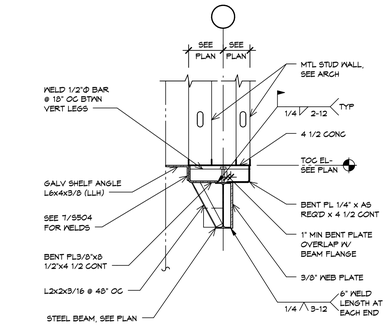

5 SECTION
SCALE: 3/4" = 1'-0"

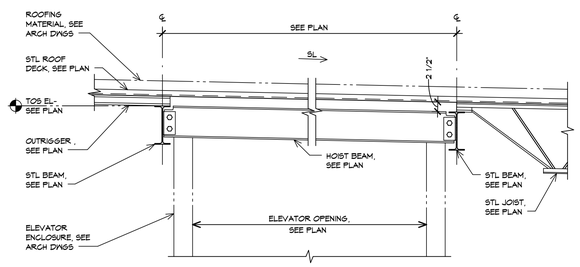

6 SECTION
SCALE: 3/4" = 1'-0"

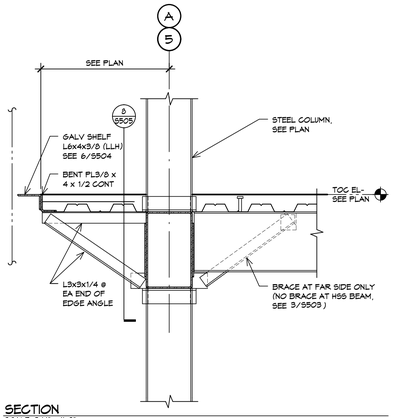

7 SECTION
SCALE: 3/4" = 1'-0"

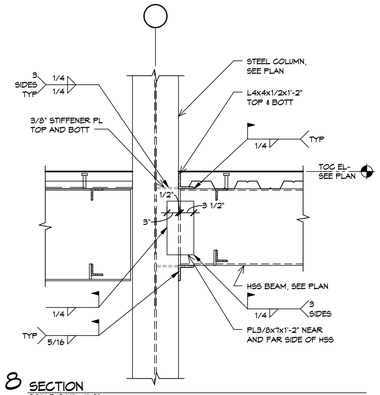

8 SECTION
SCALE: 3/4" = 1'-0"

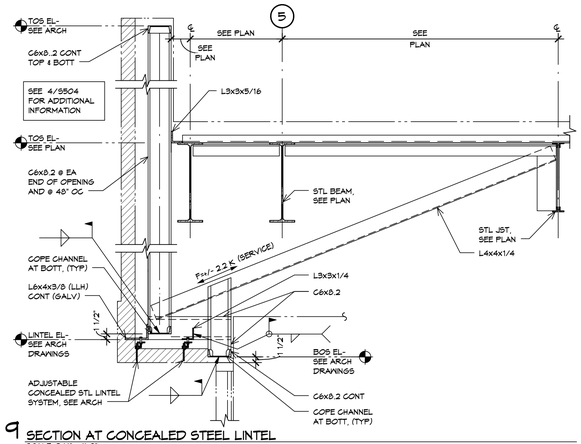

9 SECTION AT CONCEALED STEEL LINTEL
SCALE: 3/4" = 1'-0"

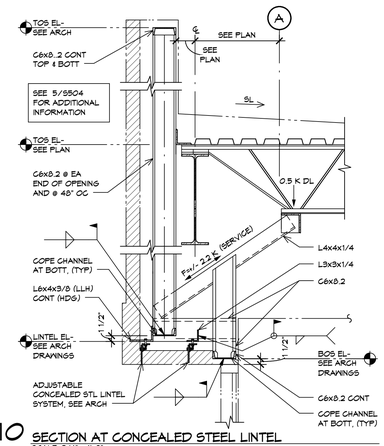

10 SECTION AT CONCEALED STEEL LINTEL
SCALE: 3/4" = 1'-0"

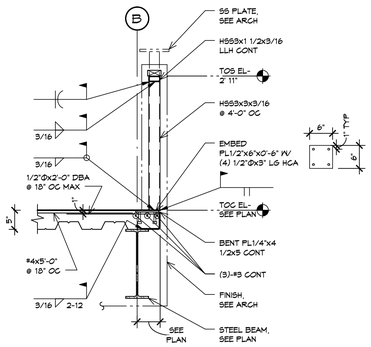

11 SECTION
SCALE: 3/4" = 1'-0"

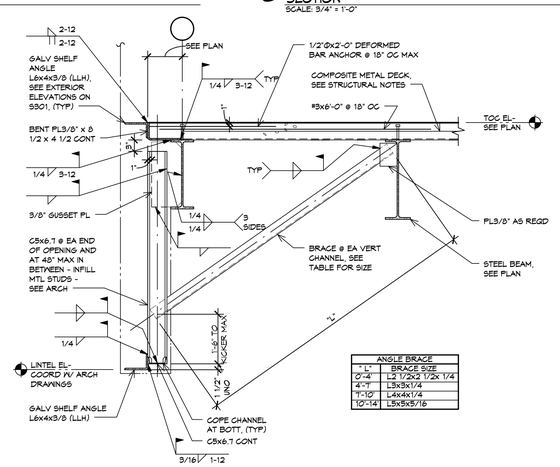

ANGLE BRACE	
" L"	BRACE SIZE
0'-4"	L2 1/2x2 1/2x 1/4
4'-9"	L3x3x1/4
9'-10"	L4x4x1/4
10'-14"	L5x5x5/16

12 TYPICAL FACADE PARALLEL TO BEAM DETAIL
SCALE: 3/4" = 1'-0"

muñoz & company
1017 NORTH MAIN SUITE 300
SAN ANTONIO, TEXAS 78212
O. 210.349.1163 F. 210.525.1038
W W W . M U N O Z - C O . C O M

INTELLIGENT ENGINEERING SERVICES
ENGINEERING COMMUNITIES FROM THE GROUND UP
200 S. 10TH STREET, SUITE 1204 McALLEN, TEXAS 78501
956.682.4645 ie-services.com
IES JOB NO: 3180027 TBPE FIRM F-482

STATE OF TEXAS
JASON D. IRISH
94227
LICENSED
PROFESSIONAL ENGINEER
11-08-18

UTRGV
The University of Texas Rio Grande Valley

UNIVERSITY OF TEXAS RIO GRANDE VALLEY
SCHOOL OF MEDICINE
TEAM BASED LEARNING CENTER
PROJECT NO: 903-1159
EDINBURG, TX
100% CONSTRUCTION DOCUMENTS

Issue/Revision

#	DESCRIPTION	DATE

Sheet Title
STEEL SECTIONS & DETAILS

Date
NOVEMBER 08, 2018

Project Number	Drawn By	Checked By
A17021.00	IES STAFF	JDI

Sheet Number
S505

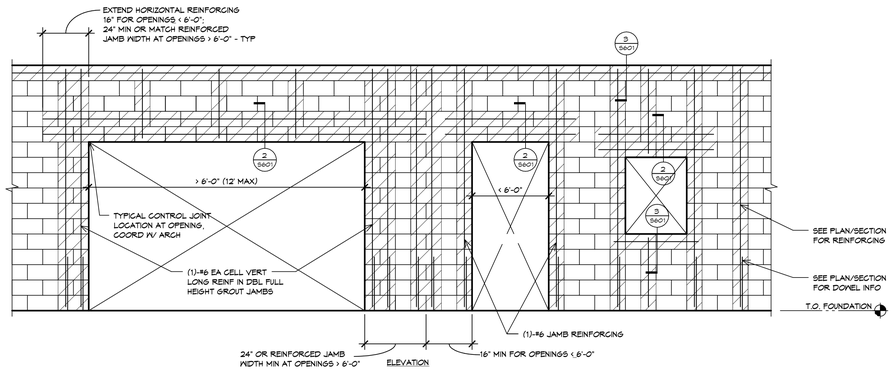

NOTES:
1. SEE ARCH DRAWINGS FOR LOCATION AND DIMENSIONS OF WALL OPENINGS.
2. SEE THE STRUCTURAL MASONRY NOTES ON S002 FOR LAP SPLICE LENGTHS.
3. SEE STRUCTURAL NOTES FOR ADDITIONAL CMU REQUIREMENTS.

1 EXTERIOR WALL REINFORCING DETAIL (WITHOUT CONTROL JOINTS)
NO SCALE

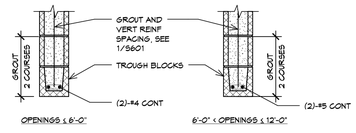

NOTES:
1. LINTELS SHALL REMAIN SHORED UNTIL MASONRY CONSTRUCTION ABOVE HAS CURED FOR A MINIMUM OF 14 DAYS.
2. SEE ARCHITECTURAL DRAWINGS FOR OPENING SIZE AND LOCATION.
3. EXTEND LINTELS PAST EDGES OF OPENINGS PER 1/S601.
4. VERTICAL CONTROL JOINTS SHALL NOT CROSS LINTEL REINFORCING.

2 TYPICAL CMU LINTEL DETAIL
NO SCALE

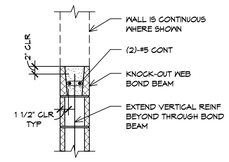

3 TYPICAL CMU BOND BEAM DETAIL
NO SCALE

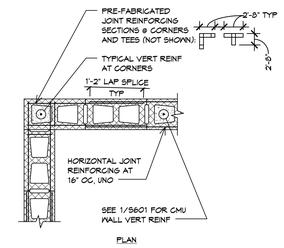

4 TYPICAL CMU BAR PLACEMENT DETAIL (WITHOUT CONTROL JOINT)
NO SCALE

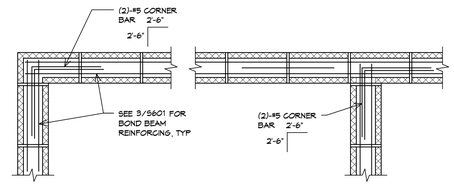

5 TYPICAL CORNER BARS AT BOND BEAMS DETAIL (WITHOUT CONTROL JOINT)
NO SCALE

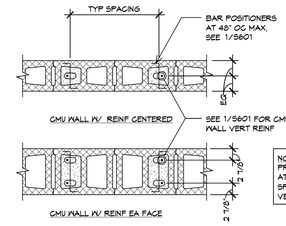

NOTE:
PROVIDE BAR POSITIONERS AT TOP AND BOTTOM OF LAP SPLICES AND AT 48" OC MAX VERTICALLY.

6 TYPICAL CMU BAR PLACEMENT DETAIL
NO SCALE

muñoz & company
1017 NORTH MAIN SUITE 300
SAN ANTONIO, TEXAS 78212
O. 210.349.1163 F. 210.525.1038
W W W . M U N O Z - C O . C O M

INTELLIGENT ENGINEERING SERVICES
ENGINEERING COMMUNITIES FROM THE GROUND UP
200 S. 10TH STREET, SUITE 1204 McALLEN, TEXAS 78501
956.682.4645 ie-services.com
IES JOB NO.:31800027 TBPE FIRM F-432

STATE OF TEXAS
JASON D. IRISH
94227
LICENSED
PROFESSIONAL ENGINEER

11-08-18

UTRGV
The University of Texas Rio Grande Valley

UNIVERSITY OF TEXAS RIO GRANDE VALLEY
SCHOOL OF MEDICINE TEAM BASED LEARNING CENTER
PROJECT NO: 903-1159
EDINBURG, TX
100% CONSTRUCTION DOCUMENTS

Issue/Revision

#	DESCRIPTION	DATE

Sheet Title
TYPICAL CONCRETE MASONRY DETAILS

Date
NOVEMBER 08, 2018

Project Number	Drawn By	Checked By
A17021.00	IES STAFF	JDI

Sheet Number
S601

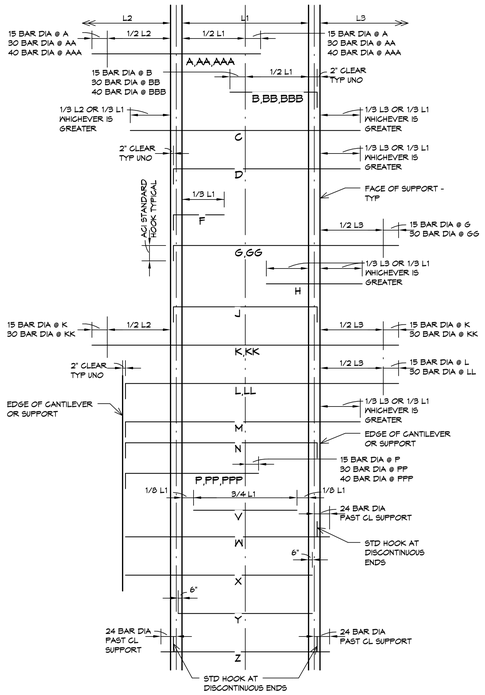

1 TYPICAL BAR BENDING DIAGRAM
NO SCALE

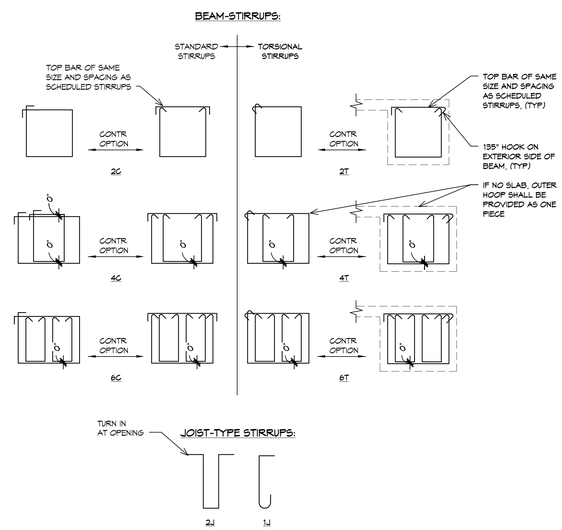

2 TYPICAL STIRRUP TYPE
NO SCALE

BEAM SCHEDULE - (MAIN SCHEDULE)								
MARK	SIZE W x D	TOP BARS LEFT END	BOTTOM BARS CENTER	TOP BARS RIGHT END	STIRRUPS			REMARKS
					SIZE	TYPE	SPACING EACH END FROM SUPPORT FACE	
B01	20 x 24	(3)-#7 BB	(3)-#7 Z	(1)-#7 BB	#3	2T	1@3, R@9	
B02	20 x 24	(3)-#7 AA	(2)-#7 Z (1)-#7 V		#3	2T	1@3, R@9	
B03	16 x 24	(3)-#7 LL	(2)-#7 W (1)-#7 X		#3	2T	1@3, R@9	
B04	20 x 54	(3)-#7 AA	(2)-#7 Z (1)-#7 V	(3)-#7 BB	#3	2T	1@3, R@12	
B05	20 x 54	(3)-#7 GG	(2)-#7 Z (1)-#7 V		#3	2T	1@3, R@12	
B06	20 x 54		(2)-#7 Z (1)-#7 V		#3	2T	1@3, R@12	
B07	20 x 24	(3)-#7 AA	(2)-#7 Z (1)-#7 V	(3)-#7 BB	#3	2T	1@3, R@9	
B08	20 x 24	(3)-#7 BB	(2)-#7 Z (1)-#7 V		#3	2T	1@3, R@9	
B09	20 x 30	(3)-#7 AA	(2)-#7 Z (1)-#7 V		#3	2T	1@3, R@9	
B10	20 x 54	(3)-#7 AA	(2)-#7 Z (1)-#7 V		#3	2T	1@3, R@12	
B11	20 x 30	(3)-#7 BB	(3)-#7 Z	(3)-#7 BB	#3	2T	1@3, R@9	
B12	20 x 24	(3)-#7 AA	(2)-#7 Z (1)-#7 V		#3	2T	1@3, R@9	

BEAM SCHEDULE NOTES

1. STIRRUPS SHALL BE SPACED FROM FACE OF SUPPORTS.
2. HOOKS SHALL BE PLACED IN DISCONTINUOUS AND CANTILEVERED ENDS.
3. PROVIDE (3)-#5 BARS CONTINUOUS IN TOP OF BEAM WHERE THERE ARE NOT SCHEDULED BARS TO SUPPORT STIRRUPS.
4. PROVIDE #4 @ 12" OC HORIZONTALLY (EACH FACE) FOR ALL BEAMS 36" OR GREATER IN DEPTH. THESE BARS ARE NOT SCHEDULED.
5. FOR REINFORCEMENT PLACEMENT, REFER TO THE 'TYPICAL BAR BENDING DIAGRAM' ON DRAWINGS.

muñoz & company
1017 NORTH MAIN SUITE 300
SAN ANTONIO, TEXAS 78212
O. 210.349.1163 F. 210.525.1038
W W W . M U N O Z - C O . C O M

INTELLIGENT
ENGINEERING
SERVICES
ENGINEERING COMMUNITIES FROM THE GROUND UP
200 S. 10TH STREET, SUITE 1204 McALLEN, TEXAS 78501
956.682.4645 ie-services.com
IES JOB NO. 3180027 TBPE FIRM F-482

STATE OF TEXAS
JASON D. IRISH
94227
LICENSED
PROFESSIONAL ENGINEER
11-08-18

UTRGV
The University of Texas
Rio Grande Valley

UNIVERSITY OF TEXAS RIO GRANDE VALLEY
SCHOOL OF MEDICINE
TEAM BASED LEARNING CENTER
PROJECT NO: 903-1159
EDINBURG, TX
100% CONSTRUCTION DOCUMENTS

Issue/Revision

#	DESCRIPTION	DATE

Sheet Title
CONCRETE BEAM SCHEDULE

Date
NOVEMBER 08, 2018

Project Number	Drawn By	Checked By
A17021.00	IES STAFF	JDI

Sheet Number
S701

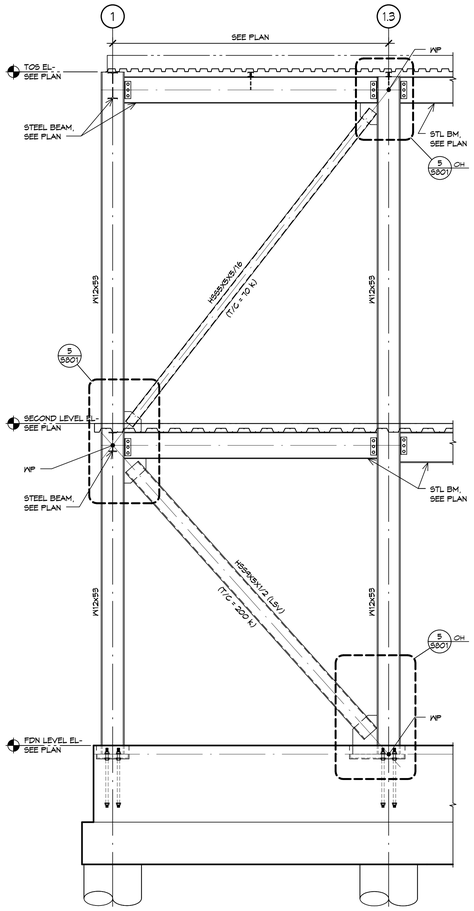

1 BRACE "A" SECTION
SCALE: 3/8" = 1'-0"

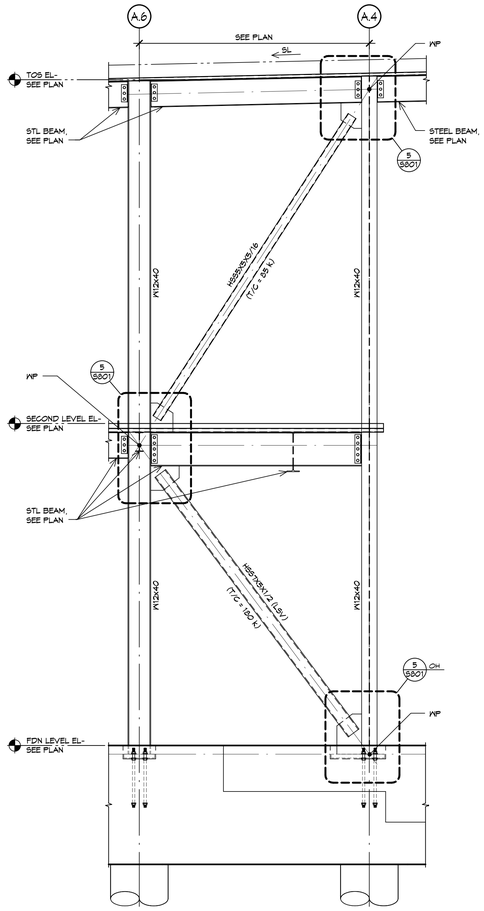

2 BRACE "B" SECTION
SCALE: 3/8" = 1'-0"

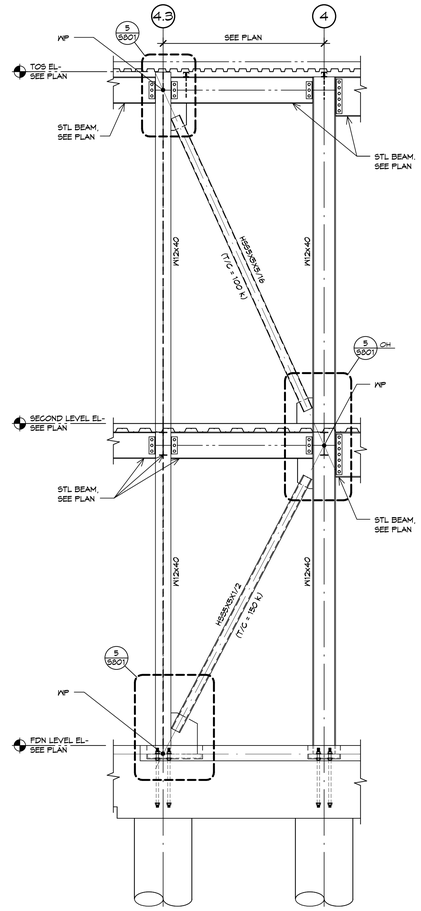

3 BRACE "C" SECTION
SCALE: 3/8" = 1'-0"

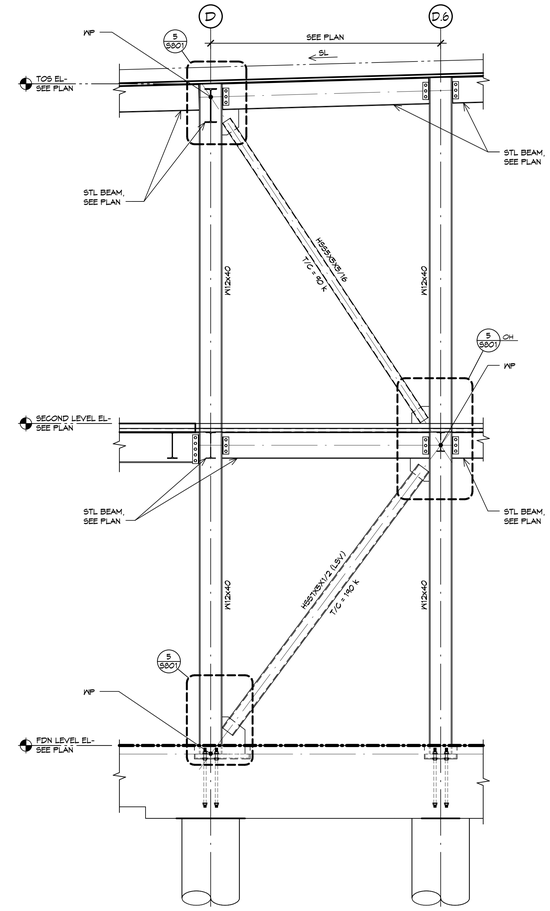

4 BRACE "D" SECTION
SCALE: 3/8" = 1'-0"

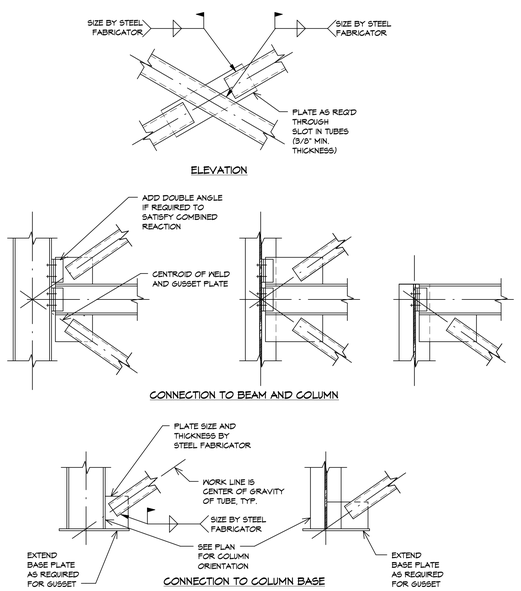

WIND BRACE DESIGN NOTES:

1. DESIGN CONNECTIONS FOR FORCES SHOWN ON WIND BRACE ELEVATIONS.
2. SIZE WELDS FOR SHEAR, TENSION AND ECCENTRICITY OF C.G. WELD AND C.G. FORCE
3. AT BEAM TO COLUMN CONNECTIONS, SIZE ATTACHMENT TO COLUMN FOR COMBINED GRAVITY LOAD SHEAR PLUS VERTICAL SHEAR COMPONENT DUE TO LATERAL LOAD.
4. CHECK NET TENSILE AND SHEAR CAPACITY OF GUSSET PLATES.
5. CALCULATIONS SHALL BE PREFORMED AND SEALED BY A REGISTERED PROFESSIONAL ENGINEER AND SHALL BE SUBMITTED TO THE ARCHITECT PER SPECIFICATIONS.

5 TYPICAL WINDBRACE CONNECTION DETAIL
SCALE: 3/4" = 1'-0"

muñoz & company
1017 NORTH MAIN SUITE 300
SAN ANTONIO, TEXAS 78212
O. 210.349.1163 F. 210.525.1038
W W W . M U N O Z - C O . C O M

INTELLIGENT
ENGINEERING
SERVICES
ENGINEERING COMMUNITIES FROM THE GROUND UP
200 S. 10TH STREET, SUITE 1204 McALLEN, TEXAS 78501
956.682.4645 ie-services.com
IES JOB NO: 31800027 TBPE FIRM F-432

STATE OF TEXAS
JASON D. IRISH
94227
LICENSED
PROFESSIONAL ENGINEER

11-08-18

UTRGV
The University of Texas
Rio Grande Valley

UNIVERSITY OF TEXAS RIO GRANDE VALLEY
SCHOOL OF MEDICINE
TEAM BASED LEARNING CENTER
PROJECT NO: 903-1159
EDINBURG, TX
100% CONSTRUCTION DOCUMENTS

Issue/Revision

#	DESCRIPTION	DATE

Sheet Title
BRACE SECTIONS & DETAILS

Date
NOVEMBER 08, 2018

Project Number	Drawn By	Checked By
A17021.00	IES STAFF	JDI

Sheet Number
S801

MECHANICAL GENERAL LEGEND

DUCTWORK SYMBOLS

DESCRIPTION	SYMBOL
BACKDRAFT DAMPER	BDD
BALANCING/VOLUME DAMPER	
OPPOSED BLADE DAMPER	
SMOKE DAMPER	RECTANGULAR S; ROUND S
FIRE DAMPER	RECTANGULAR F; ROUND F
FIRE/SMOKE DAMPER	RECTANGULAR FS; ROUND FS
FLEXIBLE CONNECTION	
MOTORIZED DAMPER	M
CONTROL DAMPER	CD
DUCT ELBOW WITH TURNING VANES	
DUCT SECTION - SUPPLY AIR	
DUCT SECTION - EXHAUST AIR	
DUCT SECTION - RETURN, OUTSIDE, OR RELIEF AIR	
DUCT, INCLINED DROP	
DUCT, INCLINED RISE	
FLEXIBLE DUCT - ROUND	8"ø
DUCT TRANSITION	14"/10" 10"/10"
DUCT TRANSITION (SQUARE OR RECTANGULAR TO ROUND)	12"/12" 8"ø
RECTANGULAR DUCT, SIZE IN INCHES, FIRST DIMENSION IS SIDE SHOWN (NET CLEAR INSIDE DIMENSION)	10"/14"
ROUND DUCT, DIAMETER IN INCHES (NET CLEAR INSIDE DIMENSION)	8"ø
AIR FLOW IN DIRECTION OF ARROW	
45° BRANCH TAKE-OFFS	
CONICAL LATERAL BRANCH TAKE-OFFS	
CEILING SUPPLY DIFFUSERS	
CEILING RETURN GRILLE/REGISTER	
CEILING EXHAUST FAN (EF-_)	
SIDEWALL SUPPLY GRILLE/REGISTER	
SIDEWALL RETURN/EXHAUST GRILLE/REGISTER	
EXTRACTOR	
DUCT TEE WITH SPLITTER DAMPER	
DOOR UNDERCUT	UC
DOOR LOUVER	L

PIPING SYMBOLS

SYMBOL	DESCRIPTION
CHWS	CHILLED WATER SUPPLY
CHWR	CHILLED WATER RETURN
CWS	CONDENSOR WATER SUPPLY
CWR	CONDENSOR WATER RETURN
HWS	HOT WATER SUPPLY
HWR	HOT WATER RETURN
PCWS	PRIMARY CHILLED WATER SUPPLY
PCWR	PRIMARY CHILLED WATER RETURN
SCWS	SECONDARY CHILLED WATER SUPPLY
SCWR	SECONDARY CHILLED WATER RETURN
D	DRAIN
	DIRECTION OF PITCH (DOWN)
	FLUID FLOW DIRECTION
	SECTIONAL VALVE (SEE SPECS)
	GATE VALVE
	CHECK VALVE
	THROTTLING VALVE (SEE SPECS)
	GLOBE VALVE
	BUTTERFLY VALVE
	CALIBRATED BALANCING VALVE
	BALL VALVE
	PRESSURE REDUCING VALVE
	PRESSURE RELIEF OR SAFETY VALVE
	VACUUM RELIEF OR SAFETY VALVE
	ANGLE VALVE
S	SOLENOID VALVE
M	2-WAY MOTOR OPERATED CONTROL VALVE
M	3-WAY MOTOR OPERATED CONTROL VALVE
CV	2-WAY CONTROL VALVE
CV	3-WAY CONTROL VALVE
	TRIPLE DUTY VALVE
	FLOW CONTROL VALVE
	PLUG VALVE
	SIGHT GLASS
	TEST COCK
TFM	PLUGGED TEE
	FLOW METER
	PRESSURE GAUGE WITH VENT COCK
	THERMOMETER
T	THERMAL WELL WITH TEMPERATURE SENSOR
	STRAINER
	STRAINER WITH BLOWDOWN VALVE
	CONCENTRIC REDUCER
	ECCENTRIC REDUCER
	UNION
	FLEXIBLE PIPE CONNECTOR
	CAPPED PIPE/OUTLET
	PLUGGED PIPE/OUTLET
	AUTOMATIC AIR VENT
	VALVE AND BLIND FLANGE
	PIPE HEADER WITH BLIND FLANGE
	PIPE TURNING UP
	PIPE TURNING DOWN
	PIPE BRANCH BOTTOM CONNECTION
	PIPE BRANCH TOP CONNECTION
	PUMP (FOR WATER FLOW DIAGRAM ONLY)

MISCELLANEOUS SYMBOLS

- X - X" — CUT PLANE
- P — DUCT STATIC PRESSURE SENSOR
- D S — DUCT SMOKE DETECTOR
- CO_2 — CARBON DIOXIDE SENSOR
- POINT OF NEW CONNECTION TO EXISTING
- H — HUMIDISTAT
- RH — RELATIVE HUMIDITY SENSOR
- BP — BUILDING PRESSURE SENSOR
- AVG T — AVERAGING THERMOSTAT OR TEMPERATURE SENSOR (MOUNT 48" AFF)
- T — THERMOSTAT OR TEMPERATURE SENSOR (MOUNT 48" AFF)
- T — DUCT TEMPERATURE SENSOR
- TC — TIME CLOCK
- F — FREEZESTAT
- DIFFUSER, GRILLE OR REGISTER MARK
- A — AIR FLOW (CFM)
- 200 CFM — 12 X 8 — RECTANGULAR FACE SIZE (WHERE APPLICABLE)
- 01 — DIRECTION OF SECTION; IDENTIFYING NUMBER OR LETTER FOR SECTIONS.
- M2.01 — NUMBER OF REFERENCE DRAWING WHERE SECTION IS SHOWN.
- IDENTIFYING NUMBER OR LETTER FOR DETAILS.
- ENLARGED DETAIL REFERENCE
- NUMBER OF REFERENCE DRAWING WHERE DETAIL IS SHOWN.
- MATCHLINE A / MATCHLINE B — MATCHLINE
- BOLD DASHED LINE DESIGNATES DEMOLITION WORK

AIRFLOW DIAGRAM SYMBOLS

- C — COOLING COIL
- H — HEATING COIL
- LOUVER
- BDD — BACKDRAFT DAMPER
- FD/SD — FIRE/SMOKE DAMPER
- AFMS — AIR FLOW MEASURING STATION
- M — MOTORIZED OPPOSED BLADE DAMPER
- M — MOTORIZED PARALLEL BLADE DAMPER
- FAN STARTER
- FAN
- FAN WITH ADJUSTABLE FREQUENCY MOTOR CONTROLLER

GENERAL ABBREVIATIONS

ABV	ABOVE
AAV	AUTOMATIC AIR VALVE
AFF	ABOVE FINISHED FLOOR
AFMS	AIR FLOW MEASURING STATION
AMB	AMBIENT
APD	AIR PRESSURE DROP
BD	BLOWDOWN
BDD	BACK DRAFT DAMPER
BF	BLIND FLANGE
BFP	BACKFLOW PREVENTER
BFV	BUTTERFLY VALVE
BHP	BRAKE HORSEPOWER
BLV	BALANCING VALVE
BLW	BELOW
BOD	BOTTOM OF DUCT
BOP	BOTTOM OF PIPE
BOS	BOTTOM OF STEEL
BV	BALL VALVE
CAP	CAPACITY
CCMS	CENTRAL CONTROL MONITORING SYSTEM
CENT	CENTRIFUGAL
CMBST	COMBUSTION AIR
CL	CENTERLINE
CV	CONTROL VALVE OR CONSTANT VOLUME
CHWS	CHILLED WATER SUPPLY
CHWR	CHILLED WATER RETURN
D	DIFFUSER OR DAMPER
DB	DRY BULB
DEG	DEGREES
DIA	DIAMETER
DN	DOWN
DX	DIRECT EXPANSION
EAT	ENTERING AIR TEMPERATURE
EDB	ENTERING DRYBULB TEMPERATURE
EFF	EFFICIENCY
ENT	ENTERING
ESP	EXTERNAL STATIC PRESSURE
EWB	ENTERING WET BULB
EWT	ENTERING WATER TEMPERATURE
FCV	FLOW CONTROL VALVE
FLA	FULL LOAD AMP
FLEX	FLEXIBLE
FM	FLOW METER
FRM	FROM
FWL	FIXED WALL LOUVER
GR	GRILLE
GV	GATE VALVE
HZ	CYCLES PER SECOND (HERTZ)
kW	KILOWATT
LAT	LEAVING AIR TEMPERATURE
LDB	LEAVING DRYBULB TEMPERATURE
LWT	LEAVING WATER TEMPERATURE

MAX	MAXIMUM
MFR	MANUFACTURER
MIN	MINIMUM
MVD	MOTORIZED VOLUME DAMPER
MW	MAKE UP WATER
NC	NORMALLY CLOSED
NK	NECK
NO	NORMALLY OPEN OR NUMBER
NTS	NOT TO SCALE
OA	OUTSIDE AIR
OBD	OPPOSED BLADE DAMPER
PD	PRESSURE DROP
PH	PHASE
PI	PRESSURE INDICATOR
PRV	PRESSURE RELIEF VAVLE
PS	PRESSURE SENSOR
PSV	PRESSURE SAFETY VALVE
PTRV	PRESSURE TEMPERATURE RELIEF VALVE
PV	PLUG VALVE
PCW	PRIMARY CHILLED WATER
PCWS	PRIMARY CHILLED WATER SUPPLY
PCWR	PRIMARY CHILLED WATER RETURN
PCWP	PRIMARY CHILLED WATER PUMP
RA	RETURN AIR (RTN)
RE:	REFER TO
RED	REDUCER
REG	REGISTER
RH	RELATIVE HUMIDITY
RPM	REVOLUTIONS PER MINUTE
SA	SUPPLY AIR
SENS	SENSIBLE
SL	SOUND LINING
SD	SMOKE DETECTOR
SOV	SOLENOID OPERATED VALVE OR SHUT-OFF VALVE
SP	STATIC PRESSURE
SS	STAINLESS STEEL
SCW	SECONDARY CHILLED WATER
SCWS	SECONDARY CHILLED WATER SUPPLY
SCWR	SECONDARY CHILLED WATER RETURN
SCWP	SECONDARY CHILLED WATER PUMP
TOD	TOP OF DUCT
TOP	TOP OF PIPE
TOS	TOP OF STEEL
TS	TEMPERATURE SENSOR
TSTAT	THERMOSTAT
TSP	TOTAL STATIC PRESSURE
UNO	UNLESS NOTED OTHERWISE
VEL	VELOCITY
VD	VOLUME DAMPER
VTR	VENT THROUGH ROOF
WB	WET BULB
WPD	WATER PRESSURE DROP
WTR	WATER
WxHxL	WIDTH BY HEIGHT BY LENGTH

EQUIPMENT ABBREVIATIONS

ABV	ABOVE
AHU	AIR HANDLING UNIT
ACU	AIR CONDENSING UNIT
ACCU	AIR COOLED CONDENSING UNIT
ACF	AIR CURTAIN FAN
AS	AIR SEPARATOR
B	BOILER
BCU	BLOWER COIL UNIT
BT	BUFFER TANK
CC	COOLING COIL
CF	CHEMICAL FEEDER
CH	CHILLER
CP	CONDENSOR PUMP
CT	COOLING TOWER
CWP	CHILLED WATER PUMP
EDH	ELECTRIC DUCT HEATER
DC	DUST COLLECTOR
DOAS	DEDICATED OUTSIDE AIR SYSTEM
EF	EXHAUST FAN
EH	ELECTRIC HEATER
ET	EXPANSION TANK
F	FILTER
FB	FILTER BOX
FCU	FAN COIL UNIT
FCCU	FAN COIL CONDENSING UNIT
FPB	FAN POWER BOX
GFUH	GAS FIRED UNIT HEATER
HC	HOT WATER HEATING COIL
HPU	HEAT PUMP UNIT
HWP	HOT WATER PUMP
OAH	OUTSIDE AIR HOOD
KEF	KITCHEN EXHAUST FAN
KSF	KITCHEN SUPPLY FAN
L	LOUVER
LEF	LAB EXHAUST FAN
MZK	MULTI-ZONE KIT
P	PUMP
PF	PURGE FAN
PP	PRIMARY PUMP
PTAC	PACKAGE TERMINAL AIR CONDITIONING
RH	RELIEF HOOD
RHEF	RELIEF HOOD EXHAUST FAN
RTU	ROOF TOP UNIT
SDB	SINGLE DUCT BOX
SF	SUPPLY FAN
SP	SECONDARY PUMP
SRF	SMOKE REMOVAL FAN
ST	CHILLED WATER STORAGE TANK
UH	UNIT HEATER
VAV	VARIABLE AIR VOLUME BOX
VFD	VARIABLE FREQUENCY DRIVE
VRV	VARIABLE REFRIGERANT VOLUME

GENERAL MECHANICAL NOTES

1. INFORMATION ON THIS PLAN HAS BEEN OBTAINED FROM EXISTING DRAWINGS AND SITE SURVEY. CONTRACTOR SHALL FIELD VERIFY EXISTING CONDITIONS PRIOR TO COMMENCING WORK. ANY DISCREPANCIES BETWEEN EXISTING CONDITIONS AND CONSTRUCTION DOCUMENTS SHALL BE REPORTED IMMEDIATELY TO THE ENGINEER AND/OR ARCHITECT. THIS PROJECT IS INTENDED FOR LEED CERTIFICATION UNDER THE USGBC RATING SYSTEM. THESE DOCUMENTS AND THE SYSTEMS IDENTIFIED HEREIN ARE CREATED AND SELECTED TO ADHERE TO LEED REQUIREMENTS. DEVIATION FROM THESE SYSTEMS BY THE CONTRACTOR WILL REQUIRE THE CONTRACTOR TO ENSURE THAT THE MODIFIED SYSTEM IS COMPLIANT WITHT HE RATING SYSTEM. ANYWORK THAT IS NOT COMPLIANT SHALL BE REMOVED AND REPLACED AT THE CONTRACTOR'S COST.
2. THE CONTRACTOR IS FULLY RESPONSIBLE FOR PERFORMING THE WORK IN FULL COMPLIANCE WITH ALL APPLICABLE LOCAL, STATE, AND FEDERAL CODES UNDER THIS SECTION OF THE CONTRACT. IF THE CONTRACTOR DETERMINES THAT THE CONTRACT DOCUMENTS AND PLANS ARE NOT IN COMPLIANCE WITH THE APPLICABLE LOCAL CODES, HE SHALL INFORM THE ARCHITECT PRIOR TO CONSTRUCTION START FOR DIRECTION. FAILURE TO DO SO SHALL NOT RELIEVE THE CONTRACTOR OF HIS RESPONSIBILITY TO MEET APPLICABLE LOCAL CODES, AND REWORK SHALL BE AT CONTRACTOR'S EXPENSE.
3. CONTRACTOR SHALL HANG AND INSTALL ALL DUCTWORK TIGHT WITH THE BUILDING STRUCTURE TO ACCOMMODATE NEW CEILINGS. CONTRACTOR SHALL COORDINATE ALL INSTALLATION WORK WITH ARCHITECTURAL AND ELECTRICAL DESIGN. ALL DUCTWORK SHALL BE MODIFIED AS NECESSARY AND REQUIRED TO FIT AROUND BUILDING STRUCTURES, ARCHITECTURAL BUILD-OUT AND ELECTRICAL CABLE TRAY INSTALLATIONS. MECHANICAL CONTRACTOR SHALL FAMILIARIZE HIMSELF WITH THE WORK SCOPE OF OTHER TRADES AND PARTICIPATE IN COORDINATING ALL CONSTRUCTION EFFORTS.
4. CONTRACTOR SHALL INSTALL ALL EXHAUST SYSTEMS, INCLUDING FANS AND EXHAUST DUCTS. PROVIDE COMPLETE NEW SYSTEMS AS INDICATED.
5. CONTRACTOR SHALL PROVIDE ALL CEILING DIFFUSERS AS SHOWN. CONNECT EACH DIFFUSER TO THE MAIN DISTRIBUTION DUCT WITH A FLEX-DUCT SECTION; CONNECTIONS SHALL BE COMPLETED IN ACCORDANCE WITH THE DETAIL. EACH FLEX-DUCT CONNECTION SHALL INCLUDE A BUTTERFLY DAMPER TO BE INSTALLED AT THE TRUNK DUCT.
6. CONTRACTOR SHALL PROVIDE ALL DUCTWORK REQUIRED TO COMPLETE THE HVAC SYSTEM. TIE IN BRANCH DUCTS TO MAIN DUCTS WITH SHEET METAL FLANGES. FLANGE CONNECTION SHALL BE FASTENED WITH CRIMPED SHEET METAL STRIPS AND SEALED WITH GASKET MATERIAL BETWEEN MATING DUCT FLANGE JOINTS. APPLICATION OF DUCT SEALANT ON COMPLETED FLANGE JOINTS IS NOT REQUIRED. THE USE OF SHEET METAL SCREWS THRU MATING FLANGES IS NOT ACCEPTABLE. THE USE OF CAULK IS NOT ACCEPTABLE.
7. CONTRACTOR SHALL SUPPLY AND INSTALL FIRE AND/OR SMOKE DAMPERS AND ACCESS DOORS IN THE HORIZONTAL DUCTS WHERE THEY PENETRATE FIRE BARRIERS.
8. ALL OPENINGS CUT IN MASONRY AND PLASTER WALLS OR CONCRETE FLOORS SHALL BE CORE DRILLED OR SAWED WHEN POSSIBLE. CONTRACTOR SHALL CHECK BUILDING CONSTRUCTION BEFORE MAKING PENETRATIONS TO AVOID CUTTING THROUGH STRUCTURAL BEAMS AND REINFORCING. CONTRACTOR SHALL INFORM THE ENGINEER IF REINFORCING IS CUT OR DAMAGED WHILE MAKING OPENINGS. CONTRACTOR SHALL REINFORCE ALL OPENINGS AS REQUIRED BY DRAWINGS AND SPECIFICATIONS. PATCH AND SEAL OPENINGS WITH 6000 PSI CEMENT GROUT. INSTALL DECORATIVE TRIM (EQUIPMENT FLANGES, FRAMING OR ESCUTCHEONS) AROUND OPENINGS IN FINISHED AREAS. COORDINATE ALL CUTTING AND PATCHING WITH THE OTHER TRADES.
9. ON ANY WORK SHOWN ON MECHANICAL DRAWINGS REQUIRING DEMOLITION OF EXISTING OR NEW BUILDING STRUCTURES AND FINISHES, IT SHALL BE THE RESPONSIBILITY OF THE CONTRACTOR TO COMPLETE THE NECESSARY DEMOLITION. CONTRACTOR SHALL PATCH AND REPAIR ALL DEMOLITION WORK. PATCHING SHALL BE COMPLETED WITH THE SAME MATERIALS AS THE SURROUNDING AREAS, OR WITH ARCHITECT-APPROVED PATCHING MATERIALS. REPAIRS SHALL BE COMPLETED ACCORDING TO ARCHITECTURAL SPECIFICATIONS. ALL REFINISHING SHALL BE APPROVED BY THE ARCHITECT.
10. CONTRACTOR SHALL BE RESPONSIBLE FOR COMPLETING THE INSTALLATION OF THE AIR DISTRIBUTION SYSTEM SHOWN. DUCTWORK, DUCT ACCESSORIES AND CONTROLS SHOWN AND REQUIRED SHALL BE SUPPLIED AND INSTALLED. ALL INSTALLATION WORK SHALL BE DONE IN ACCORDANCE WITH APPLICABLE CODES, INCLUDING NFPA 90A, 90B, AND 92B.
11. OWNER SHALL PROVIDE TAB CONSULTANT IN ORDER TO ACHIEVE THE AIR VOLUME REQUIREMENTS INDICATED. BALANCING SHALL INCLUDE ADJUSTMENT OF ALL MANUAL VOLUME DAMPERS, SPLITTER DAMPERS, ZONE DAMPERS (IF REQUIRED), BUTTERFLY DAMPERS AND INDIVIDUAL DIFFUSER VOLUME DAMPERS (FINAL BALANCING ONLY). CONTRACTOR SHALL SUPPLY THE ENGINEER WITH A COMPLETE BALANCING REPORT WHICH INCLUDES VOLUME, ROOM REFERENCE AND ZONE VOLUME TOTALS.
12. MOUNT ALL THERMOSTATS (SENSORS) 48" ABOVE THE FINISHED FLOOR LEVEL UNLESS NOTED OTHERWISE THERMOSTATS SHOWN SHALL BE IN CONTROL OF THE ZONE SYSTEM WHICH IS SUPPLYING AIR TO THE AREA WHERE THE THERMOSTAT IS LOCATED. CONTRACTOR SHALL COORDINATE THE FINAL LOCATION OF EACH THERMOSTAT WITH THE ROOM FINISHES AND USES. CONTRACTOR SHALL SUPPLY AND INSTALL ALL CONTROL VOLTAGE WIRING AND CONDUIT FOR THERMOSTAT (DDC CONTROL) INSTALLATION.
13. CONTRACTOR SHALL COORDINATE THE FINAL LOCATIONS OF ALL CEILING DIFFUSERS WITH LIGHTING INSTALLATIONS AND ARCHITECTURAL REFLECTED CEILING PLANS. MOVE THE DIFFUSER LOCATIONS IF REQUIRED TO AVOID OBSTRUCTIONS FROM DUCTWORK AND LIGHT FIXTURES. COORDINATE RELOCATION WITH ENGINEER.
14. CONTRACTOR SHALL INSTALL NEW REFRIGERANT PIPING FLUSH WITH THE BUILDING STRUCTURE AND MECHANICAL ROOM BOUNDARIES AS SHOWN. CONTRACTOR SHALL COORDINATE ALL INSTALLATION WORK WITH DUCTS AND ELECTRICAL CONDUIT. MECHANICAL CONTRACTOR SHALL FAMILIARIZE HIMSELF WITH THE WORK SCOPE OF OTHER TRADES AND PARTICIPATE IN COORDINATING ALL CONSTRUCTION EFFORTS.
15. ALL PIPING SHALL BE INSULATED AND JACKETED. REFER TO THE SPECIFICATIONS. CONDENSER COILS ARE TO BE COATED IN ACCORDANCE WITH THE SPECIFICATIONS.
16. VERIFY THE LOCATION OF ALL WALLS, PARTITIONS, DOORS, CABINETS, AND CEILINGS FROM ACTUAL FIELD MEASUREMENTS.
17. PROVIDE SMOKE DETECTOR AND SHUTDOWN CONTROLS ON AIR HANDLERS AND SUPPLY FANS. SMOKE DETECTORS SHALL BE PROVIDED, INSTALLED AND WIRED FOR SHUT DOWN BY DIVISION 26. PROVIDE BOTH SUPPLY AND RETURN SIDE DEVICES.

muñoz & company
1017 NORTH MAIN SUITE 300
SAN ANTONIO, TEXAS 78212
O. 210.349.1163 F. 210.525.1038
WWW.MUNOZ-CO.COM

HALFF
5000 WEST MILITARY, SUITE 100
McALLEN, TEXAS 78503
TEL (956) 664-0286
FAX (956) 664-0282
Halff Associates firm registration number is F-312

STATE OF TEXAS
HUGO H. AVILA
90071
LICENSED
PROFESSIONAL ENGINEER
11-8-18

UTRGV
The University of Texas Rio Grande Valley

UNIVERSITY OF TEXAS RIO GRANDE VALLEY
SCHOOL OF MEDICINE
TEAM BASED LEARNING CENTER
PROJECT NO: 903-1159
EDINBURG, TX
100% CONSTRUCTION DOCUMENTS

Issue/Revision

#	DESCRIPTION	DATE

Sheet Title
MECHANICAL GENERAL LEGEND

Date
NOVEMBER 08, 2018

Project Number	Drawn By	Checked By
33828	K.G/M.H	H.A.

Sheet Number
M-001

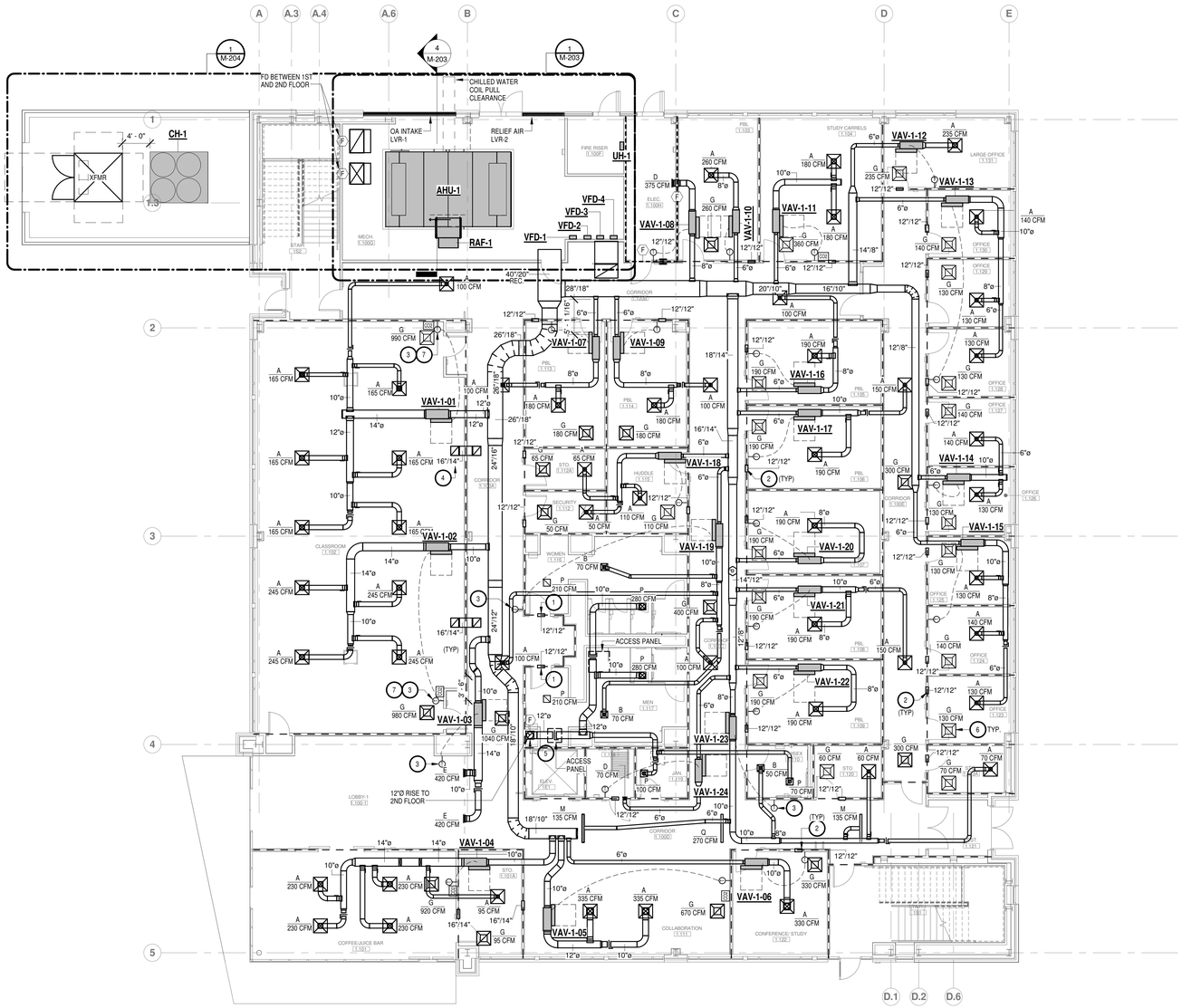

TRUE NORTH
PLAN NORTH

1 MECHANICAL HVAC PLAN LEVEL 1
1/8" = 1'-0"

GENERAL NOTES

A. REFER TO SHEET M-001 FOR GENERAL MECHANICAL NOTES.
B. ALL DUCTWORK OUTSIDE OF THE MECHANICAL ROOM SHALL BE OVAL DUCT UNLESS NOTED OTHERWISE ON PLANS.

KEY NOTES

1	FURNISH AN 12"X12" OPENING IN WALL ABOVE CEILING FOR TRANSFER AIR.
2	PROVIDE TRANSFER AIR OPENING ABOVE CEILING.
3	CONTRACTOR SHALL FURNISH AND INSTALL VANDAL PROOF VENTILATED ENCLOSURE FOR WALL MOUNTED SENSOR.
4	PROVIDE TRANSFER DUCT ABOVE CEILING PER DETAIL 4, SHEET M302.
5	FIRE DAMPER IN DUCTWORK. PROVIDE ACCESS PANELS AS SHOWN ON DETAIL 5, SHEET M301.
6	REFER TO DETAIL 10/M-303 FOR RETURN AIR BOOT TYP.
7	T-STATS TO OPERATE AS AVERAGING T-STATS WITH SINGLE SETPOINT.

FIRE RATED WALL

FULL HEIGHT WALL

muñoz & company
1017 NORTH MAIN SUITE 300
SAN ANTONIO, TEXAS 78212
O. 210.349.1163 F. 210.525.1038
WWW.MUNOZ-CO.COM

HALFF
5000 WEST MILITARY, SUITE 100
McALLEN, TEXAS 78503
TEL (956) 664-0286
FAX (956) 664-0282
Halff Associates firm registration number is F-312

STATE OF TEXAS
HUGO H. AVILA
90071
LICENSED
PROFESSIONAL ENGINEER
11-8-18

UTRGV
The University of Texas Rio Grande Valley

UNIVERSITY OF TEXAS RIO GRANDE VALLEY
SCHOOL OF MEDICINE
TEAM BASED LEARNING CENTER

PROJECT NO: 903-1159
EDINBURG, TX
100% CONSTRUCTION DOCUMENTS

Issue/Revision

#	DESCRIPTION	DATE

Sheet Title
MECHANICAL HVAC PLAN LEVEL 1

Date
NOVEMBER 08, 2018

Project Number	Drawn By	Checked By
33828	JB/KG	HA

Sheet Number
M-201

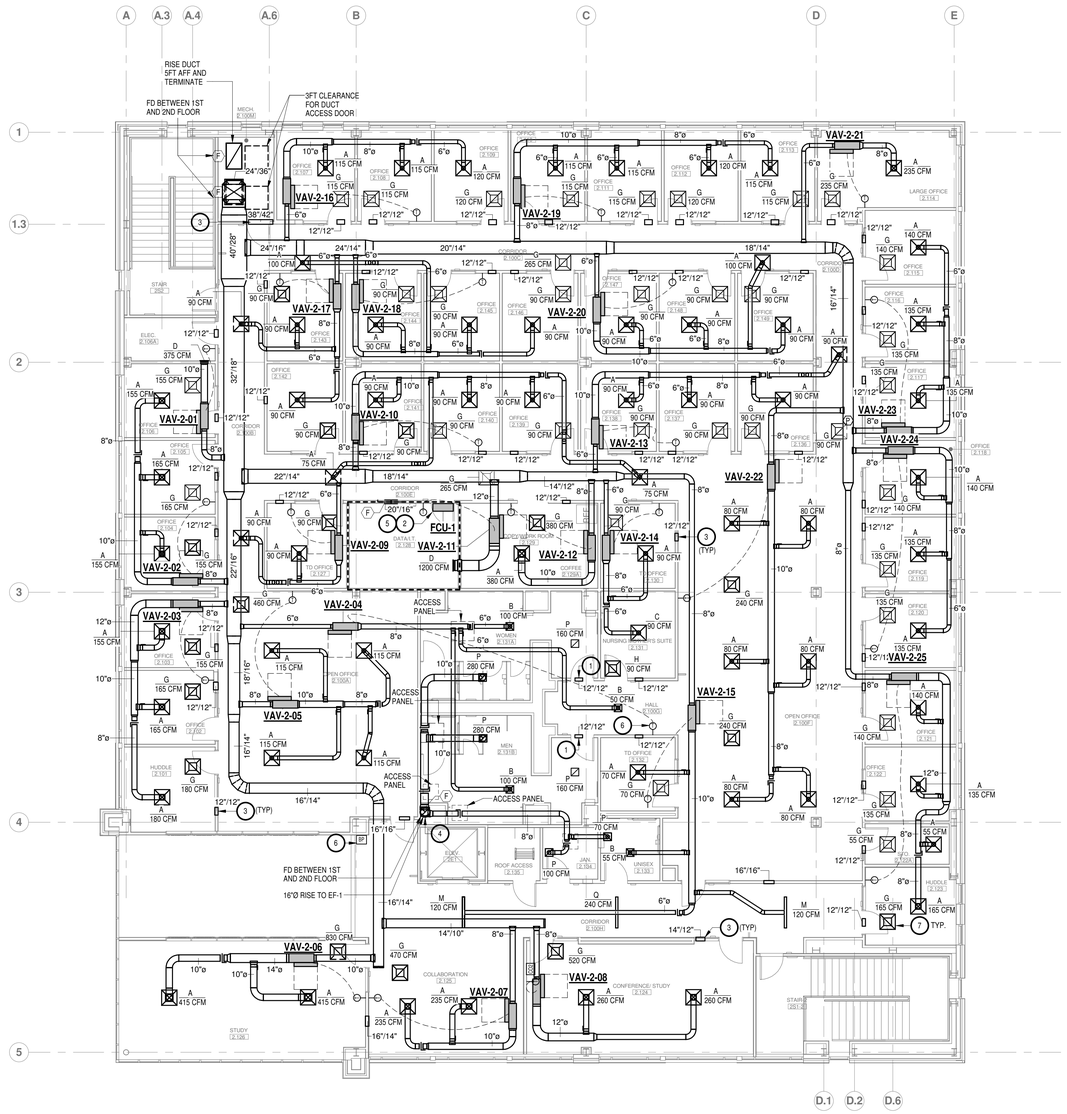

1 MECHANICAL HVAC PLAN LEVEL 2
1/8" = 1'-0"

GENERAL NOTES

A. REFER TO SHEET M-001 FOR GENERAL MECHANICAL NOTES.
B. ALL DUCTWORK OUTSIDE OF THE MECHANICAL ROOM SHALL BE OVAL DUCT UNLESS NOTED OTHERWISE ON PLANS.

KEY NOTES

1	FURNISH AN 12"X12" OPENING IN WALL ABOVE CEILING FOR TRANSFER AIR.
2	CONTRACTOR SHALL INSTALL FCU ABOVE DOOR.
3	PROVIDE TRANSFER AIR OPENING ABOVE CEILING.
4	FIRE DAMPER IN DUCTWORK. PROVIDE ACCESS PANELS AS SHOWN ON DETAIL 5, SHEET M301.
5	ROUTE CONDENSATE DRAIN LINE TO LAVATORY P-TRAP TAIL PIECE DRAIN IN WOMENS 2.131A.
6	CONTRACTOR SHALL FURNISH AND INSTALL VANDAL PROOF VENTILATED ENCLOSURE FOR WALL MOUNTED SENSOR.
7	REFER TO DETAIL 10/M-303 FOR RETURN AIR BOOT TYP.

muñoz & company
1017 NORTH MAIN SUITE 300
SAN ANTONIO, TEXAS 78212
O. 210.349.1163 F. 210.525.1038
W W W . M U N O Z - C O . C O M

HALFF
5000 WEST MILITARY, SUITE 100
McALLEN, TEXAS 78503
TEL (956) 664-0286
FAX (956) 664-0282
Halff Associates firm registration number is F-312

STATE OF TEXAS
HUGO H. AVILA
90071
LICENSED PROFESSIONAL ENGINEER
11-8-18

UTRGV
The University of Texas Rio Grande Valley

UNIVERSITY OF TEXAS RIO GRANDE VALLEY
SCHOOL OF MEDICINE
TEAM BASED LEARNING CENTER

PROJECT NO: 903-1159
EDINBURG, TX
100% CONSTRUCTION DOCUMENTS

Issue/Revision

#	DESCRIPTION	DATE

Sheet Title
MECHANICAL HVAC PLAN LEVEL 2

Date
NOVEMBER 08, 2018

Project Number	Drawn By	Checked By
33828	JB/KG	HA

Sheet Number
M-202

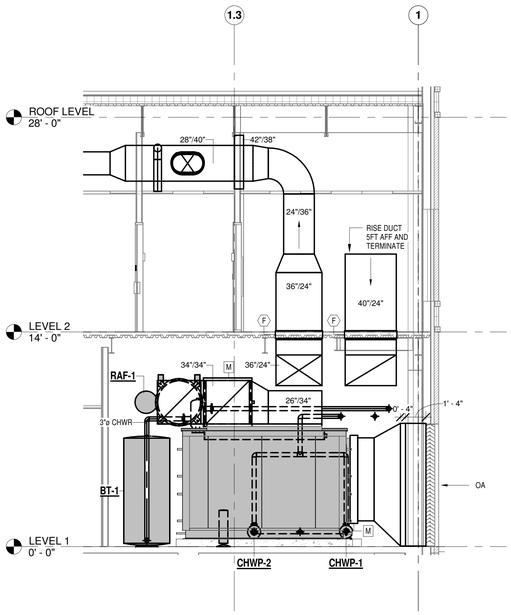

4 MECHANICAL SECTION 1
1/4" = 1'-0"

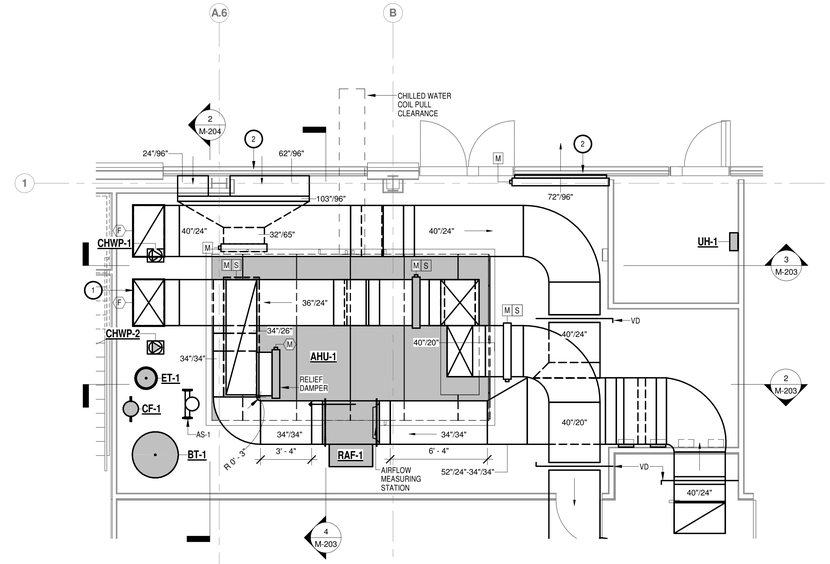

1 ENLARGED MECHANICAL HVAC PLAN LEVEL 1
1/4" = 1'-0"

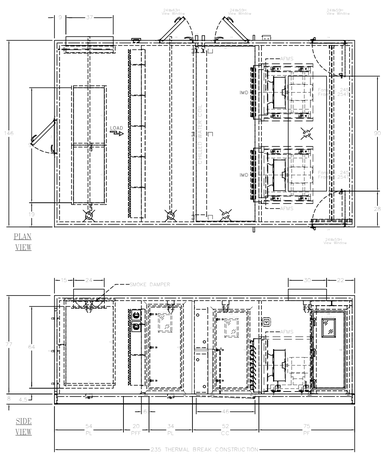

LEGEND:

OSA = OUTSIDE AIR	IMD = ISOLATION MOTORIZED DAMPER
RA = RETURN AIR	SA = SUPPLY AIR
NS = NEAR SIDE	EA = EXHAUST AIR
HS = HIGH SIDE	FS = FAR SIDE
AB = AIR BLENDER	LS = LOW SIDE
CC = COOLING COIL	MB = MIXING BOX
CU = CONDENSING UNIT	MS = MOISTURE SEPARATOR
DE = DIRECT EVAPORATIVE	MZ = MULTI ZONE
DF = DWDI FAN	PF = PLENUM FAN
DX = DX COIL	PFF = PREFINAL FILTER
EC = ECONOMIZER	PL = PLENUM
FF = FINAL FILTER	PR = PRE-FILTER
FU = FURNACE	SC = STEAM COIL
HC = HEATING COIL	ST = SOUND TAP
IE = INDIRECT EVAPORATIVE	VF = VEE FILTER
	AFMS = AIR FLOW MONITORING STATION

NOTES:
1. ALL DIMENSIONS ARE IN INCHES UNLESS OTHERWISE SPECIFIED.
2. OPENING DIMENSION TOLERANCES ARE ± 0.50, ALL OTHER CABINET DIMENSION TOLERANCES ARE ± 1.00.
3. LIFTING LUG LOCATIONS ON MECHANICAL DRAWINGS ARE FOR REPRESENTATION ONLY.
4. SMOKE DAMPER SHALL BE UL LISTED.

5 AHU DIMENSION
N.T.S.

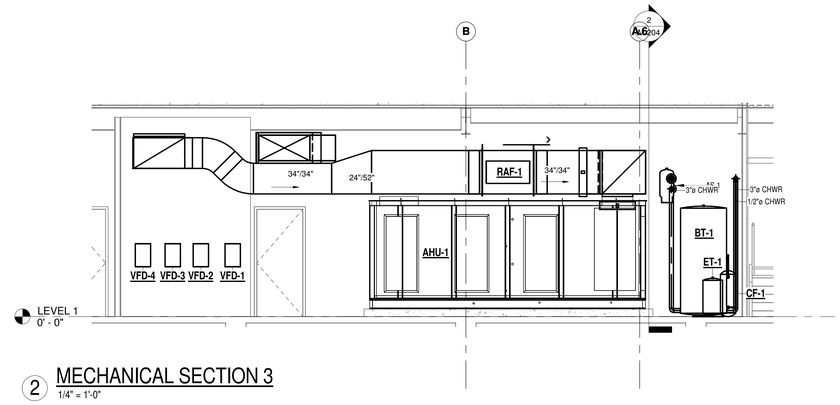

2 MECHANICAL SECTION 3
1/4" = 1'-0"

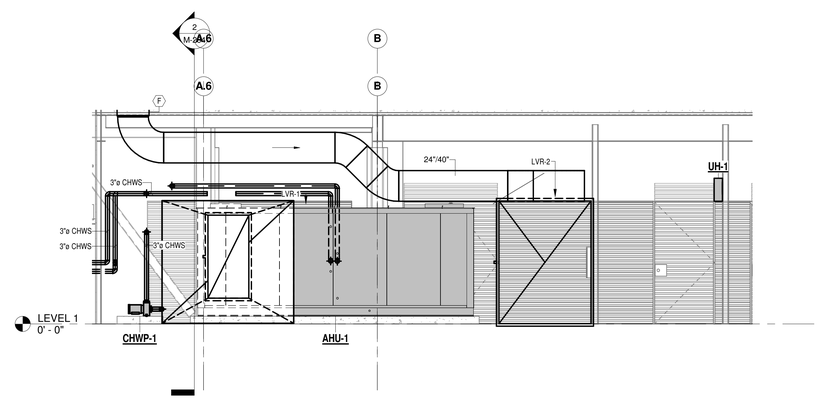

3 MECHANICAL SECTION 4
1/4" = 1'-0"

GENERAL NOTES

A. REFER TO SHEET M-001 FOR GENERAL MECHANICAL NOTES.
B. ALL DUCTWORK OUTSIDE OF THE MECHANICAL ROOM SHALL BE OVAL DUCT UNLESS NOTED OTHERWISE ON PLANS.

KEY NOTES

1	PROVIDE BALANCING DAMPER IN VERTICAL DUCT.
2	CONTRACTOR SHALL BLANK OFF ANY UNUSED SECTIONS OF LOUVER.

muñoz & company
1017 NORTH MAIN SUITE 300
SAN ANTONIO, TEXAS 78212
O. 210.349.1163 F. 210.525.1038
WWW.MUNOZ-CO.COM

HALFF
5000 WEST MILITARY, SUITE 100
McALLEN, TEXAS 78503
TEL (956) 664-0286
FAX (956) 664-0282
Halff Associates firm registration number is F-312

STATE OF TEXAS
HUGO H. AVILA
90071
LICENSED
PROFESSIONAL ENGINEER
11-8-18

UTRGV
The University of Texas Rio Grande Valley

UNIVERSITY OF TEXAS RIO GRANDE VALLEY
SCHOOL OF MEDICINE
TEAM BASED LEARNING CENTER
PROJECT NO: 903-1159
EDINBURG, TX
100% CONSTRUCTION DOCUMENTS

Issue/Revision

#	DESCRIPTION	DATE

Sheet Title
MECHANICAL HVAC - MECHANICAL ROOM ENLARGMENTS & SECTIONS

Date
NOVEMBER 08, 2018

Project Number	Drawn By	Checked By
33828	JB/KG	HA

Sheet Number
M-203

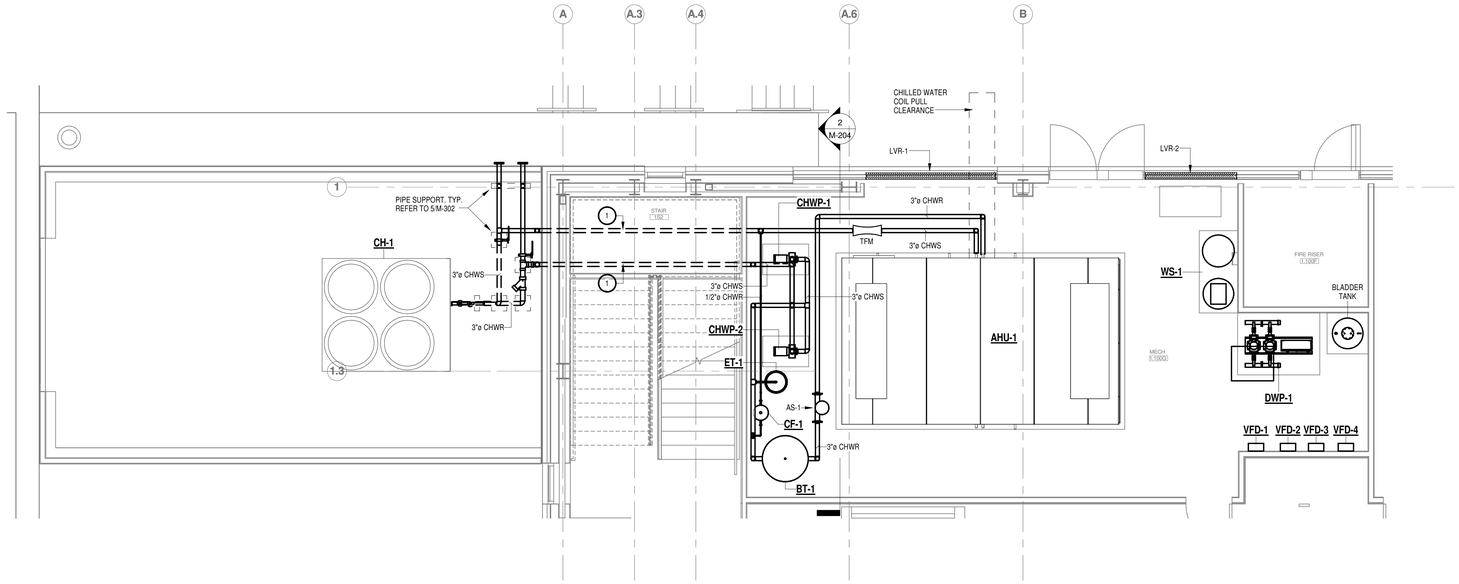

1 ENLARGED MECHANICAL HVAC PLAN - HYDRONIC - LEVEL 1
1/4" = 1'-0"

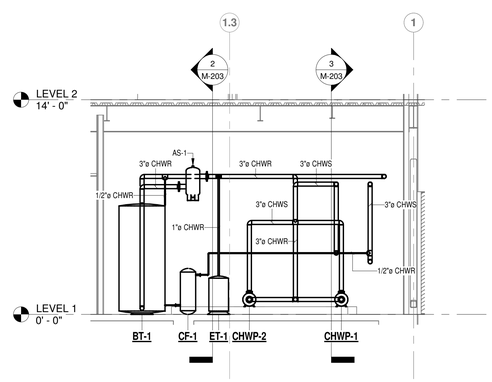

2 MECHANICAL SECTION 5
1/4" = 1'-0"

GENERAL NOTES

KEY NOTES

1 PROVIDE SLEEVES FOR CHILLED WATER PIPES IN STAIRWELL. LINKSEAL REQUIRED.

muñoz & company
1017 NORTH MAIN SUITE 300
SAN ANTONIO, TEXAS 78212
O. 210.349.1163 F. 210.525.1038
W W W . M U N O Z - C O . C O M

HALFF
5000 WEST MILITARY, SUITE 100
McALLEN, TEXAS 78503
TEL (956) 664-0286
FAX (956) 664-0282
Halff Associates firm registration number is F-312

STATE OF TEXAS
HUGO H. AVILA
90071
LICENSED
PROFESSIONAL ENGINEER
11-8-18

UTRGV
The University of Texas Rio Grande Valley

UNIVERSITY OF TEXAS RIO GRANDE VALLEY
SCHOOL OF MEDICINE
TEAM BASED LEARNING CENTER
PROJECT NO: 903-1159
EDINBURG, TX
100% CONSTRUCTION DOCUMENTS

Issue/Revision

#	DESCRIPTION	DATE

Sheet Title
MECHANICAL HVAC - MECHANICAL ROOM - HYDRONIC

Date
NOVEMBER 08, 2018

Project Number	Drawn By	Checked By
33828	Author	Checker

Sheet Number
M-204

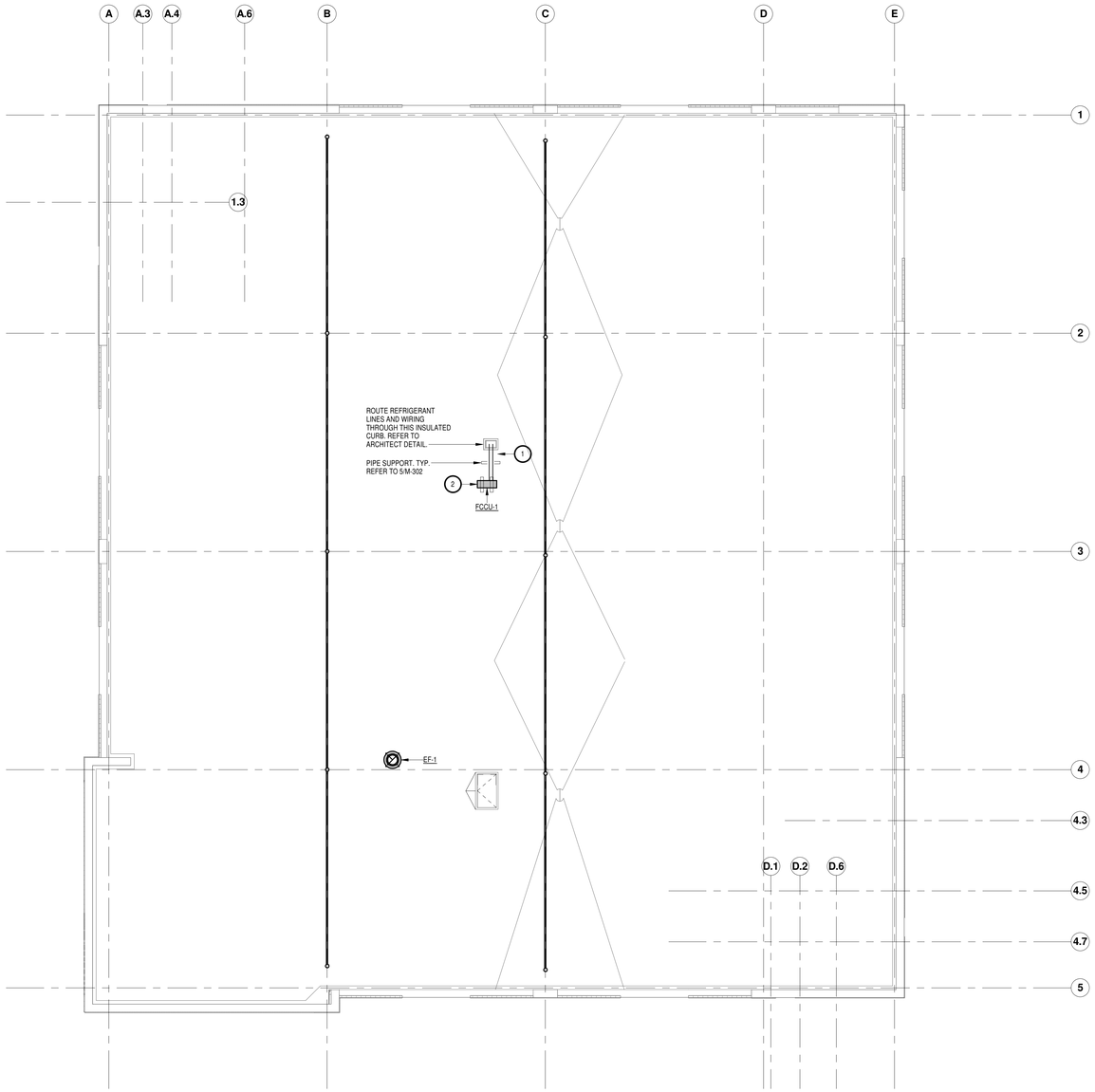

TRUE NORTH
PLAN NORTH

1 MECHANICAL HVAC PLAN LEVEL ROOF
1/8" = 1'-0"

GENERAL NOTES

KEY NOTES

1	ROUTE REFRIGERANT LINES FROM ROOF MOUNTED ACCESS POINT TO CONDENSING UNIT. PROVIDE PIPE SUPPORT.
2	CONTRACTOR SHALL INSTALL MECHANICAL EQUIPMENT A MINIMUM OF 10 FT. FROM ROOF'S EDGE AND ANCHOR EQUIPMENT TO ROOF IN COMPLIANCE WITH TEXAS DEPARTMENT OF INSURANCE. INSTALL UNIT ON SUPPORT PLATFORM. REFER TO DETAIL 08/M301

muñoz & company
1017 NORTH MAIN SUITE 300
SAN ANTONIO, TEXAS 78212
O. 210.349.1163 F. 210.525.1038
WWW.MUNOZ-CO.COM

HALFF
5000 WEST MILITARY, SUITE 100
McALLEN, TEXAS 78503
TEL (956) 664-0286
FAX (956) 664-0282
Halff Associates firm registration number is F-312

STATE OF TEXAS
HUGO H. AVILA
90071
LICENSED
PROFESSIONAL ENGINEER
11-8-18

UTRGV
The University of Texas Rio Grande Valley

UNIVERSITY OF TEXAS RIO GRANDE VALLEY
SCHOOL OF MEDICINE
TEAM BASED LEARNING CENTER
PROJECT NO: 903-1159
EDINBURG, TX
100% CONSTRUCTION DOCUMENTS

Issue/Revision

#	DESCRIPTION	DATE

Sheet Title
MECHANICAL HVAC PLAN - ROOF PLAN

Date
NOVEMBER 08, 2018

Project Number	Drawn By	Checked By
33828	JB/KG	HA

Sheet Number
M-205

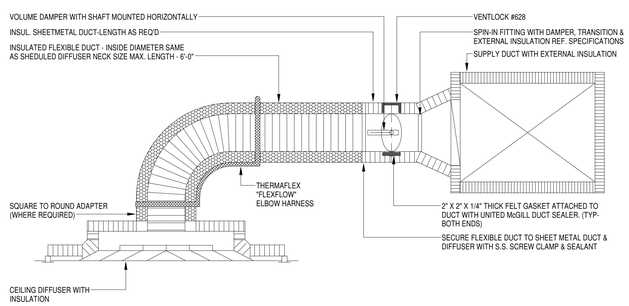

3 CEILING DIFFUSER CONNECTION DETAIL
N.T.S.

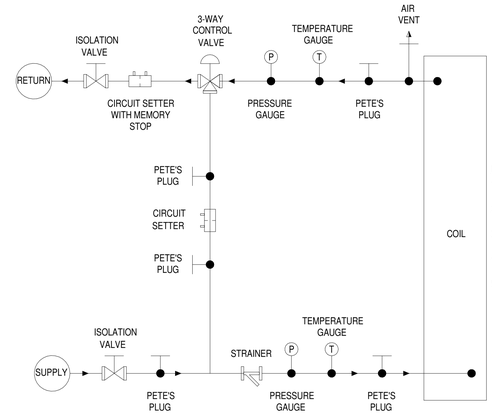

NOTES

1. WHERE PIPE SIZE IS 2 1/2 " OR SMALLER, PROVIDE BALL VALVE IN LIEU OF BUTTERFLY VALVE.
2. PROVIDE THERMOMETERS AND PRESSURE GAUGES, PER SPECS.
3. INSTALL UNIONS IN PIPE LOCATION OUT OF WAY TO PULL COIL OUT
4. PROVIDE BALANCE METER IN THE SUPPLY PIPE FOR AHU COIL WITH 50 GPM OR MORE
5. PROVIDE BALL VALVE DRAIN VALVE AND DRAIN LINE TO FLOOR DRAIN.

2 WATER COIL CONNECTION WITH 3-WAY VALVE
N.T.S.

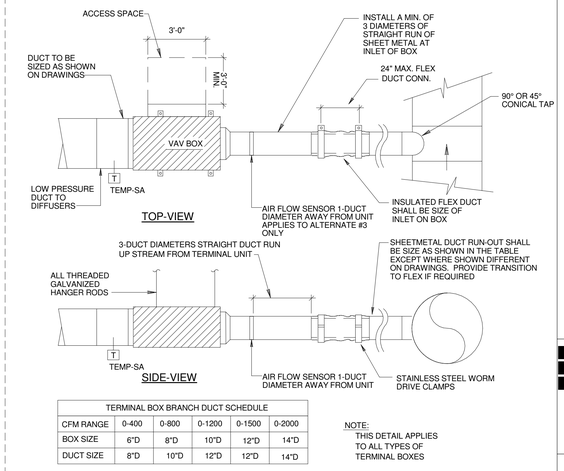

TERMINAL BOX BRANCH DUCT SCHEDULE					
CFM RANGE	0-400	0-800	0-1200	0-1500	0-2000
BOX SIZE	6"D	8"D	10"D	12"D	14"D
DUCT SIZE	8"D	10"D	12"D	12"D	14"D

NOTE:
THIS DETAIL APPLIES TO ALL TYPES OF TERMINAL BOXES

1 TERMINAL BOX DETAIL
N.T.S.

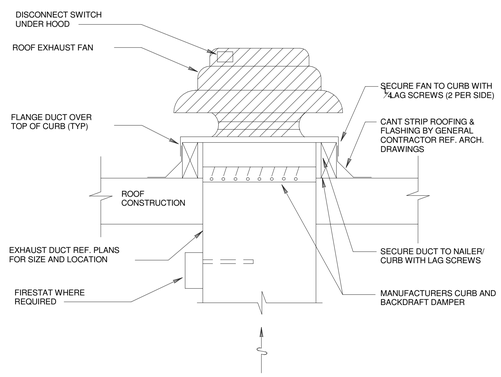

7 ROOF MOUNTED EXHAUST FAN
N.T.S.

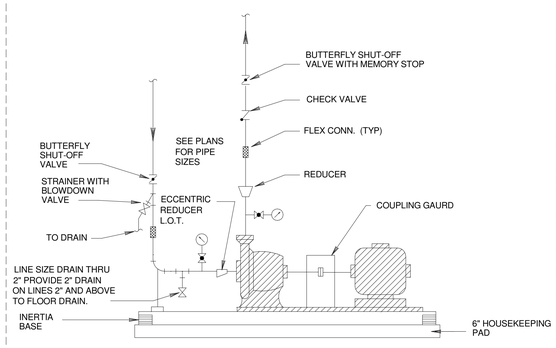

6 END SUCTION PUMP
N.T.S.

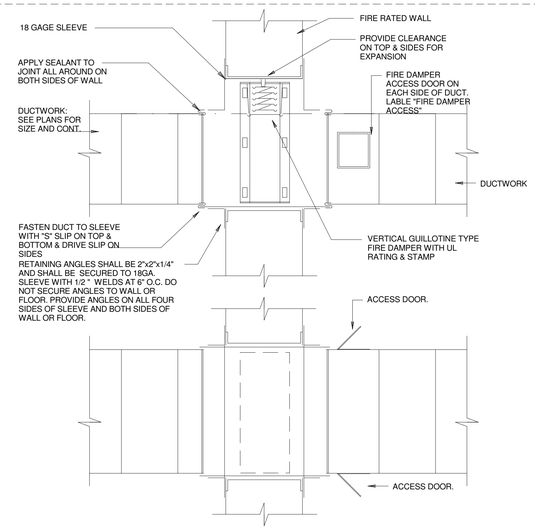

5 DUCT PENETRATION THRU FIRE RATED WALL
N.T.S.

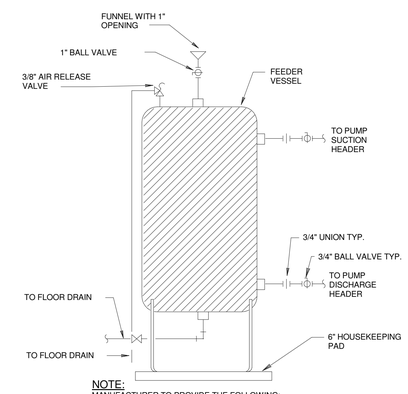

NOTE:
MANUFACTURER TO PROVIDE THE FOLLOWING:
THREADED TAPS
FEEDER VESSEL (X GALLON)
FUNNEL WITH 1" OPENING
3/8" AIR RELEASE VALVE

4 CHEMICAL SHOT FEEDER DETAIL
N.T.S.

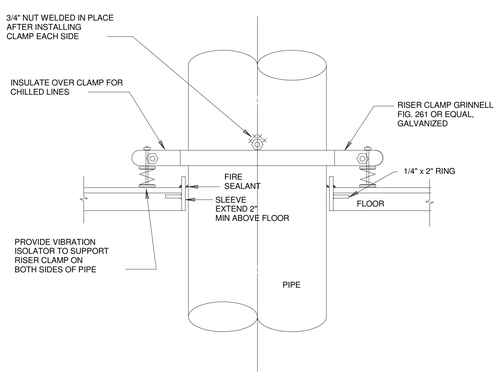

11 RISER CLAMP SUPPORT DETAIL
N.T.S.

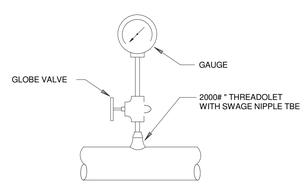

WATER

10 TYPICAL PRESSURE GUAGE DETAIL
N.T.S.

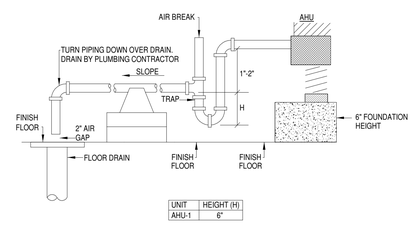

UNIT	HEIGHT (H)
AHU-1	6"

9 CONDENSATE DRAIN-FLOOR/ROOF MTD.
N.T.S.

NOTE:
IT SHALL BE THE RESPONSIBILITY OF THE MECHANICAL CONTRACTOR TO INSURE THE UNIT IS INSTALLED LEVEL ON MOUNTING FRAME.

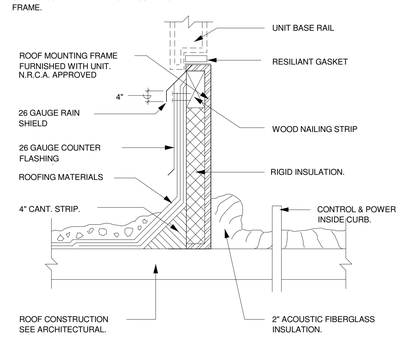

8 MOUNTING FRAME DETAIL
N.T.S.

muñoz & company
1017 NORTH MAIN SUITE 300
SAN ANTONIO, TEXAS 78212
O. 210.349.1163 F. 210.525.1038
W W W . M U N O Z - C O . C O M

HALFF
5000 WEST MILITARY, SUITE 100
McALLEN, TEXAS 78503
TEL (956) 664-0286
FAX (956) 664-0282
Halff Associates firm registration number is F-312

STATE OF TEXAS
HUGO H. AVILA
90071
LICENSED
PROFESSIONAL ENGINEER
11-8-18

UTRGV
The University of Texas Rio Grande Valley

UNIVERSITY OF TEXAS RIO GRANDE VALLEY
SCHOOL OF MEDICINE
TEAM BASED LEARNING CENTER
PROJECT NO: 903-1159
EDINBURG, TX
100% CONSTRUCTION DOCUMENTS

Issue/Revision

#	DESCRIPTION	DATE

Sheet Title
MECHANICAL DETAILS I

Date
NOVEMBER 08, 2018

Project Number	Drawn By	Checked By
33828	JB/KG	HA

Sheet Number
M-301

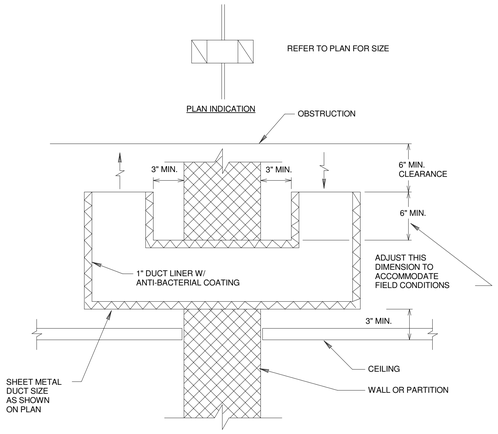

4 RETURN AIR TRANSFER DETAIL
N.T.S.

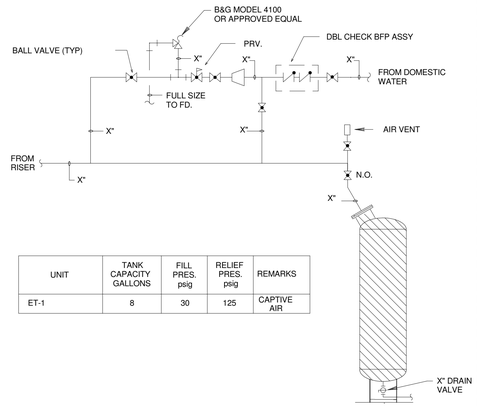

UNIT	TANK CAPACITY GALLONS	FILL PRES. psig	RELIEF PRES. psig	REMARKS
ET-1	8	30	125	CAPTIVE AIR

3 EXPANSION TANK DETAIL
N.T.S.

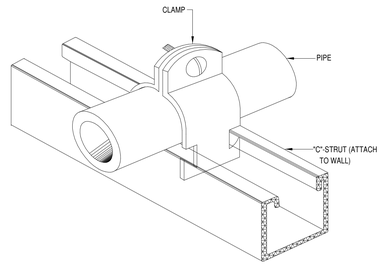

2 WALL SUPPORT
N.T.S.

MATERIAL NOTES

1.) MATERIAL, UNLESS OTHERWISE NOTED, SHALL BE A.S.T.M. A-36 OR A-285C FABRICATED IN ACCORDANCE WITH THE A.I.S.C. CODE OF STANDARD PRACTICE.

2.) SURFACE PREPARATION OR PAINTING WILL BE REQUIRED ONLY IF NOTED BELOW. GALVANIZING IF REQUIRED SHALL BE 2 OZ. MINIMUM COAT IN ACCORDANCE WITH A.S.T.M. A-123.

3.) GALVANIZED MATERIAL THAT IS FIELD CUT, DRILLED OR WELDED, SHALL BE COATED WITH GALVACON OR EQUAL ON EXPOSED SURFACES.

4.) ALL BOLTING MATERIAL SHALL CONFORM TO A.S.T.M. SPEC. A-307. NUTS SHALL BE HEAVY HEX. TYPE.

5.) VENDOR TO FABRICATE & ASSEMBLE AS REQUIRED, AND TAG ASSEMBLY WITH MARK NUMBERS.

GENERAL NOTES

AS APPLIED TO ANCHORS, GUIDES, AND MISCELLANEOUS SUPPORTS.

1.) THIS DRAWING SPECIFIED TYPE AND APPLICATION OF NORMAL SUPPORT, GUIDE, & ANCHOR REQUIREMENTS FOR PIPING ON PIEWAYS, IN STRUCTURES, & AT GRADE.

2.) SELECTION AND APPLICATION OF TYPE SHALL BE MADE AFTER CONSIDERATION HAS BEEN GIVEN TO EFFECTS FROM TEMPERATURE EXPANSION AND REACTION FORCES ON EQUIPMENT OR SUPPORTS.

PIPE GUIDES SHALL NOT BE PLACED CLOSER THAN 40 PIPE DIAMETERS FROM A DIRECTIONAL CHANGE OF PIPE, EXCEPT WHERE REQUIRED BY STRESS ANALYSIS.

PIPE GUIDE SPACING TABLE

LINE SIZE	VERTICAL RUN	HORIZONTAL RUN
3/4" THRU 3"	25 FT. CENTERS	APPROX. 50 FT. CENTERS (SEE GENERAL NOTE 4)
4" THRU 6"	35 FT. CENTERS	
8" THRU 10"	35 FT. CENTERS	APPROX. 150 FT. CENTERS
12" THRU 16"	50 FT. CENTERS	
18" THRU 24"	60 FT. CENTERS	

1 GENERAL NOTES-PIPE SUPPORTS
N.T.S.

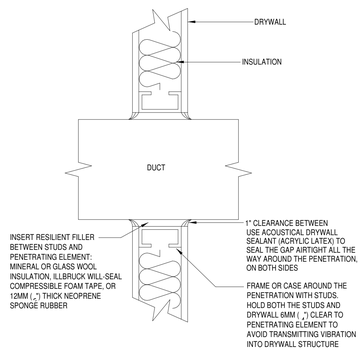

8 DUCT PENETRATION THRU DRYWALL
1/8" = 1'-0"

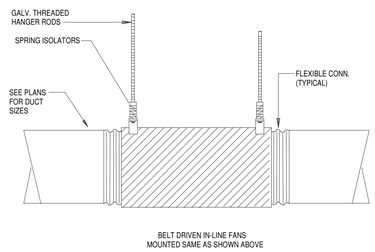

7 IN-LINE FAN MOUNTING
N.T.S.

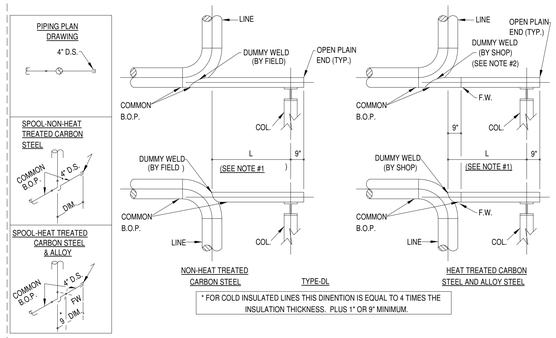

6 DUMMY SUPPORT FOR INSULATED PIPE
N.T.S.

SIZE SECHEDULE			
A	B	C	D
2-3"	1"	8"	2"
4-6"	2"	8"	2"
8-10"	3"	12"	4"
12" UP	4"	12"	4"

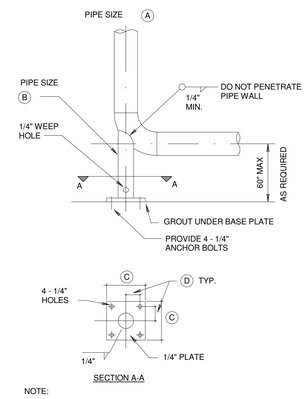

NOTE:
1. INSULATE BASE ELBOW SUPPORTS ON ALL LOW TEMPERATURE SERVICE.

5 BASE ELBOW DETAIL
N.T.S.

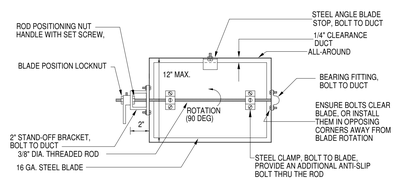

NOTES:
1. DAMPERS FOR ROUND DUCTS SHALL BE SIMILAR TO THE DAMPER SHOWN ABOVE.
2. ENSURE THAT FULL 90° DAMPER BLADE MOVEMENT IS UNOBSTRUCTED.
3. FOR DUCT HEIGHTS MORE THAN 12", PROVIDE FACTORY-FABRICATED OPPOSED BLADE DAMPERS

12 MANUAL DAMPER
N.T.S.

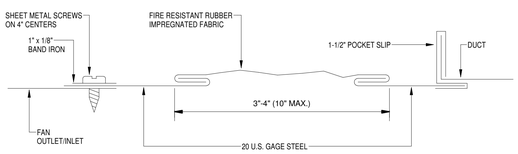

11 FLEXIBLE CONNECTION
N.T.S.

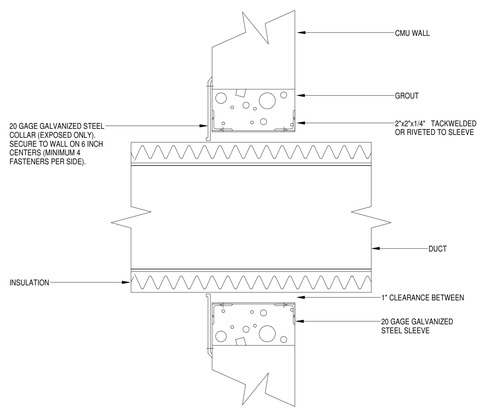

10 DUCT PENETRATION THRU WALL
N.T.S.

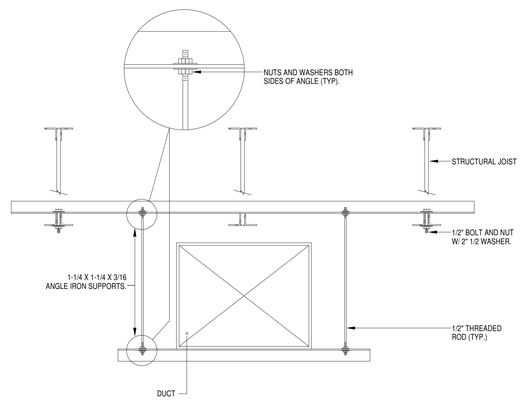

9 DUCT HANGER
N.T.S.

muñoz & company
1017 NORTH MAIN SUITE 300
SAN ANTONIO, TEXAS 78212
O. 210.349.1163 F. 210.525.1038
W W W . M U N O Z - C O . C O M

HALFF
5000 WEST MILITARY, SUITE 100
McALLEN, TEXAS 78503
TEL (956) 664-0286
FAX (956) 664-0282
Halff Associates firm registration number is F-312

STATE OF TEXAS
HUGO H. AVILA
90071
LICENSED PROFESSIONAL ENGINEER
11-8-18

UTRGV
The University of Texas Rio Grande Valley

UNIVERSITY OF TEXAS RIO GRANDE VALLEY
SCHOOL OF MEDICINE
TEAM BASED LEARNING CENTER
PROJECT NO: 903-1159
EDINBURG, TX
100% CONSTRUCTION DOCUMENTS

Issue/Revision

#	DESCRIPTION	DATE

Sheet Title
MECHANICAL DETAILS II

Date
NOVEMBER 08, 2018

Project Number	Drawn By	Checked By
33828	JB/KG	HA

Sheet Number
M-302

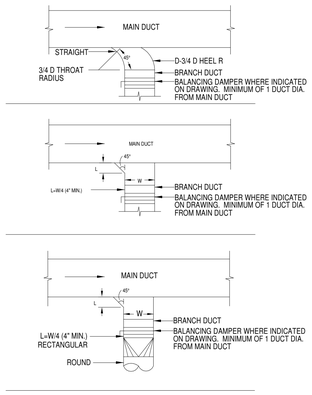

4 TYP BRANCH CONNECTION
N.T.S.

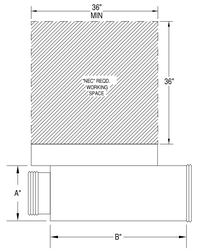

BASIS MODEL	SIZE	DIM A	DIM B	HEIGHT
PRICE	6"Ø	16	12	13
PRICE	8"Ø	16	12	13
PRICE	10"Ø	16	14	13
PRICE	12"Ø	16	16	15
PRICE	14"Ø	16	20	18
PRICE	16"Ø	16	24	18
PRICE	24/16	16	38	21

VERIFY ALL SPACE REQUIREMENTS PRIOR TO INSTALLATION.

3 SDB CLEARANCES
N.T.S.

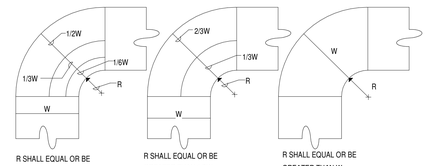

NOTES:
1. THE INTERIOR SURFACE OF ALL RADIUS ELBOWS SHALL BE MADE ROUND
2. ALL STANDARD RADIUS ELBOWS SHOWN ON PLANS MAY BE MADE SHORT RADIUS ELBOWS. ALL SHORT RADIUS ELBOWS SHALL HAVE VANES. VANES SHALL BE CONSTRUCTED, SUPPORTED AND FASTENED AS RECOMMENDED BY SMACNA.

2 RADIUS DUCT ELBOW
N.T.S.

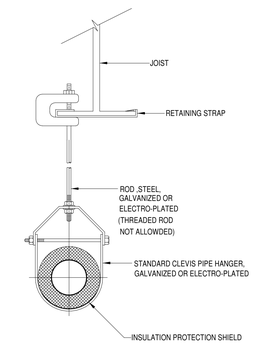

1 PIPE HANGER
N.T.S.

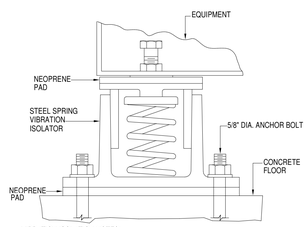

VIBRATION ISOLATION NOTES:

A. ALL PIPING THAT IS CONNECTED TO EQUIPMENT SHALL BE SUPPORTED FROM RESILIENT CEILING HANGERS OR FROM FLOOR-MOUNTED RESILIENT SUPPORTS. (SPRING AND NEOPRENE IN SERIES) THE FIRST 3 HANGERS NEXT TO THE EQUIPMENT SHALL HAVE A MIN. STATIC DEFLECTION EQUAL TO ONE HALF OF THE STATIC DEFLECTION OF THE EQUIPMENT MOUNTING SYSTEM. BEYOND THE THIRD PIPE SUPPORT A STATIC DEFLECTION OF 1/4" TO 1/2" WILL BE UTILIZED.

B. PIPES PASSING THROUGH THE MECHANICAL EQUIPMENT ROOMS WALLS SHALL BE PROVIDED A 1 INCH CLEARANCE BETWEEN THE PIPE AND PIPE SLEEVE INSTALLED IN THE WALL. THE PIPE SHALL BE SUPPORTED EITHER SIDE OF THE WALL SO THAT THE PIPE DOES NOT REST ON THE SLEEVE. THE CLEARANCE SPACE SHALL BE FILLED WITH FIBEROUS FILLER MATERIAL AND SEALED WITH A NON-HARDENING CAULKING COMPOUND AT BOTH WALL SURFACES OR AS REQUIRED FOR FIRE STOPPING IN FIRE WALLS.

8 VIBRATION ISOLATION
N.T.S.

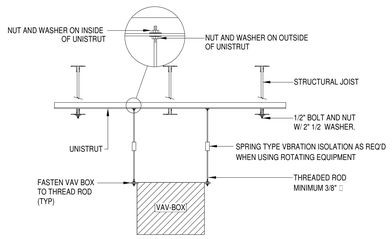

7 VAV BOX SUSPENSION
N.T.S.

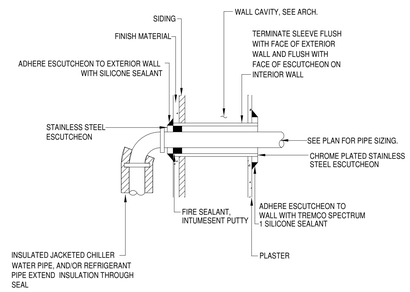

6 TYPICAL EXTERIOR WALL PENETRATION
N.T.S.

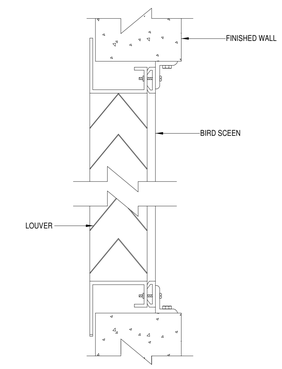

5 WALL LOUVER
N.T.S.

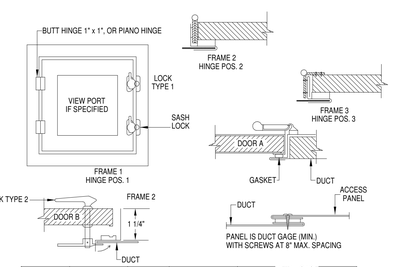

	DOOR SIZE	NO. HINGES	NO. LOCKS	METAL GAGE FRAME	METAL GAGE DOOR	METAL GAGE BACK
2" W.G. STATIC AND LESS	12" x 12" 16" x 20" 24" x 24"	2 2 3	1-S 2-S 2-S	24 22 22	26 24 22	26 26 26
3" W.G. STATIC	12" x 12" 16" x 20" 24" x 24"	2 2 3	1-S 1-S,1-T,1-B 2-S,1-T,1-B	22 20 20	22 20 20	26 26 24
4" W.G. TO 10" W.G.	12" x 12" 16" x 20" 24" x 24"	2 3 3	1-S,1-T,1-B 2-S,1-T,1-B 2-S,2-T,2-B	20 18 18	20 18 18	26 24 24
S = SIDE OPPOSITE HINGES, T = TOP, B = BOTTOM						

11 DUCT ACCESS DOOR
N.T.S.

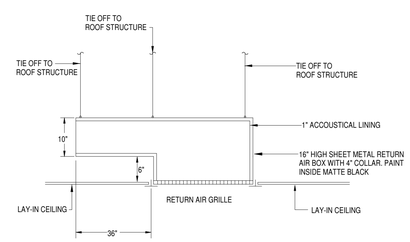

10 RETURN AIR GRILLE DETAIL
N.T.S.

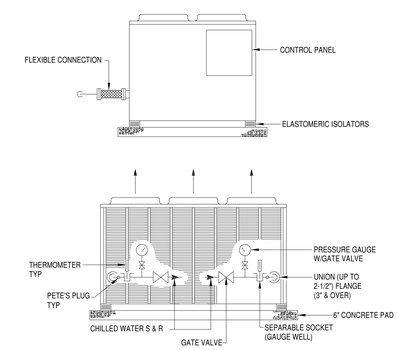

NOTE: ALL PIPE FITTINGS USED FOR TEMPERATURE, PRESSURE, AND DRAIN PORTS TO BE OF BRASS MATERIAL. NO BLACK PIPE ALLOWED.

9 AIR COOLED CHILLER SCHEMATIC
N.T.S.

muñoz & company
1017 NORTH MAIN SUITE 300
SAN ANTONIO, TEXAS 78212
O. 210.349.1163 F. 210.525.1038
W W W . M U N O Z - C O . C O M

HALFF
5000 WEST MILITARY, SUITE 100
McALLEN, TEXAS 78503
TEL (956) 664-0286
FAX (956) 664-0282
Halff Associates firm registration number is F-312

STATE OF TEXAS
HUGO H. AVILA
90071
LICENSED
PROFESSIONAL ENGINEER
11-8-18

UTRGV
The University of Texas Rio Grande Valley

UNIVERSITY OF TEXAS RIO GRANDE VALLEY
SCHOOL OF MEDICINE
TEAM BASED LEARNING CENTER
PROJECT NO: 903-1159
EDINBURG, TX
100% CONSTRUCTION DOCUMENTS

Issue/Revision

#	DESCRIPTION	DATE

Sheet Title
MECHANICAL DETAILS III

Date
NOVEMBER 08, 2018

Project Number	Drawn By	Checked By
33828	K.G/M.H	H.A.

Sheet Number
M-303

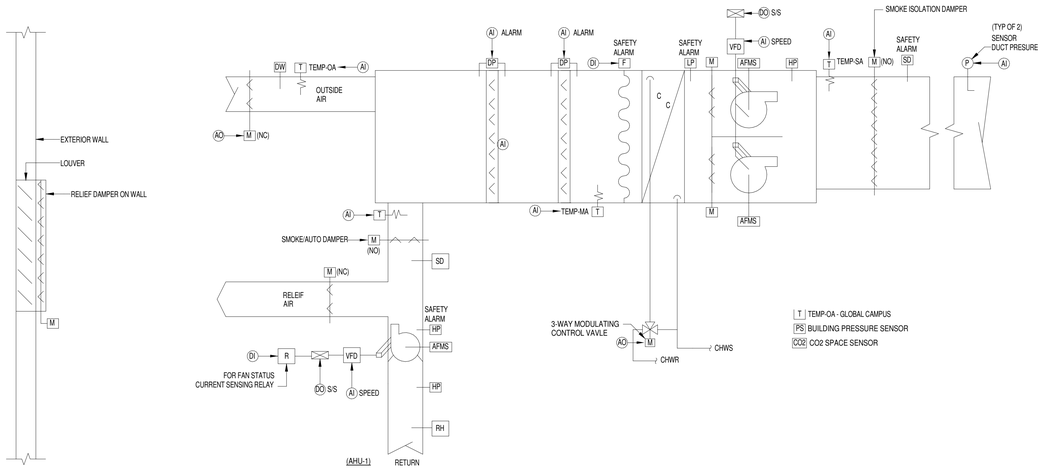

START/STOP - THE FMS SHALL INITIATE START AND STOP CONTROL OF THE SYSTEM BY PROGRAMMED INPUT, TIMED OVERRIDE, OR OPERATOR OVERRIDE. ORDER AT STARTUP SHALL BE:
1. OPEN OA DAMPER.
2. RA DAMPER OPEN, RELIEF DAMPER CLOSED.
3. ISOLATION DAMPER OPEN ON AHU.
4. ALL FANS TO GO TO MINIMUM FREQUENCY.
5. PROOF OF FLOW ON AFMS ON AHU.

SUPPLY FAN CONTROL - A. UPON INITIATION BY BUILDING FMS AND PROOF OF FLOW, FANS WILL START CONCURRENTLY AND MODULATE TO MAINTAIN DUCT STATIC PRESSURE.

B. THE DUCT PRESSURE SENSOR SHALL SIGNAL THE VFD OPERATING THE FAN MOTORS TO INCREASE OR DECREASE FAN SPEED AS APPROPRIATE TO MATCH STATIC PRESSURE SET POINT.

RETURN AIR FAN CONTROL - THE RETURN AIR FAN SPEED IS CONTROLLED TO MAINTAIN THE RETURN AIR FLOW RATE AT A SETPOINT EQUAL TO THE SUPPLY AIRFLOW RATE LESS THE FIXED DIFFERENTIAL AIR FLOW RATE REQUIRED TO MAINTAIN BUILDING POSITIVE PRESSURE.

TEMPERATURE CONTROL - THE DISCHARGE AIR TEMPERATURE SENSOR SHALL CONTROL THE MODULATING VALVE TO PROVIDE A SUPPLY AIR TEMPERATURE OF 54°F (ADJ.).

DEMAND CONTROL VENTILATION - WHEN CO2 LEVELS, AS DETERMINED BY CO2 SENSOR IN SPACE EXCEEDS SETPOINT, THE SYSTEM SHALL FOLLOW THE ORDER OF:
1. VAV WITH CO2 SENSOR TO GO TO MAXIMUM FLOW FOR 15 MINUTES.
2. IF CO2 DOES NOT CLEAR IN STEP 1 THEM, MIN. O.A. CFM SETPOINT WILL INCREASE FROM MIN TO MAX IN INCREMENTS OF 500 CFM (ADJUSTABLE.) FOR 15 MINUTES (ADJUSTABLE.)

STATIC PRESSURE RESET - THE NORMAL SETPOINT SHALL BE ESTABLISHED BY TAB. THE FMS SHALL MONITOR THE STATUS OF THE TERMINAL UNIT DAMPER COMMAND POSITION.

AUTOMATIC SHUTDOWN CONTROL - UPON DETECTION OF SMOKE AT ANY DUCT MOUNTED S.D. (FURNISHED, INSTALLED, AND WIRED FOR SHUTDOWN BY DIVISION 26/28) WITHIN THE AREA SERVED BY THE AHU, MOTOR SHALL BE DE-ENERGIZED. A HIGH & LOW STATIC PRESSURE SWITCH (MANUAL RESET) WILL STOP THE FANS ON HIGH & LOW STATIC PRESSURE AS DETERMINED BY SYSTEM OPERATING CONDITIONS. UPON A VERIFICATION BY FREEZESTAT, UNIT WILL SHUTDOWN.

ECONOMIZER -
1. THE ECONOMIZER MODE OVERRIDES DEMAND CONTROL VENTILATION MODE.
2. THE ECONOMIZER MODE IS TO BE ON WHEN OUTSIDE TEMPERATURE IS BETWEEN 75 DEG F (ADJ) AND 20 DEG F (ADJ.)
3. WHEN OUTSIDE TEMPERATURE IS BETWEEN 75 AND 55 DEG F.
   a. OUTSIDE AIR DAMPER IS 100% OPEN
   b. RELIEF DAMPER IS 100% OPEN
   c. RETURN AIR DAMPER IS 100% CLOSED
   d. MIXED AIR TEMPERATURE SENSOR IS USED ONLY FOR MONITORING
   e. CHILLED WATER VALVE MODULATES.
   f. DISCHARGE AIR SET POINT IS 55 DEG F.
4. WHEN OUTSIDE TEMPERATURE IS BETWEEN 55 AND 20 DEG F.
   a. OUTSIDE AIR DAMPER IS 100% OPEN
   b. CHILLED WATER VALVE IS TO BE 100% CLOSED.
   c. RETURN AND RELIEF AIR DAMPERS ARE TO MODULATE IN OPPOSITE MANNER BASED ON DISCHARGE AIR TEMPERATURE SET POINT OF 55 OR 60 DEG F. THE DISCHARGE AIR TEMPERATURE SET POINT IS TO BE RESET BASED ON OUTSIDE AIR TEMPERATURE AND RETURN AIR SPACE RELATIVE HUMIDITY WITH LINEAR SLOPE FUNCTION OF:
   - WHEN OUTSIDE AIR TEMPERATURE IS 55 DEG F AND SPACE RELATIVE HUMIDITY IS LESS THAN 55%, DISCHARGE AIR TEMP SET POINT IS 55 DEG F.
   - WHEN OUTSIDE AIR TEMPERATURE IS 40 DEG F (OR LESS) AND SPACE RELATIVE HUMIDITY IS LESS THAN 55%, DISCHARGE AIR TEMP SET POINT IS 60 DEG F.
   - AT ANY MOMENT DISCHARGE AIR TEMP SET POINT IS NOT MET BY BEING 5 DEG F (ADJ) LESS THAN SET POINT, FMS WILL SWITCH THE MODE FROM ECONOMIZER TO NORMAL.
   - AT ANY MOMENT RETURN AIR HUMIDITY IS GREATER THAN 60% (ADJ), BAS WILL SWITCH THE MODE FROM ECONOMIZER TO NORMAL.
   - AT ANY MOMENT MIXED AIR TEMPERATURE IS LOWER THAN 50 DEG F, FMS WILL SWITCH THE MODE FROM ECONOMIZER TO NORMAL.

NIGHT/UNOCCUPIED MODE - NIGHT/UNOCCUPIED SETBACK CONTROLS SHALL BE DETERMINED BY FMS ON A TIME BASIS. WHEN TEMPERATURES ARE OUTSIDE UNOCCUPIED SETPOINTS. UNIT SHALL INITIALIZE TO MAINTAIN THOSE UNOCCUPIED SETPOINTS. O.A. DAMPER SHALL BE CLOSED AND EXHAUST IS OFF.

OCCUPIED MODE - COOLING - 75°F, DEADBAND - 5°F
HEATING - 70°F, DEADBAND - 5°F
RH - 50%, DEADBAND 5%

NIGHT/UNOCCUPIED MODE - COOLING - 80°F, DEADBAND - 5°F
HEATING - 60°F, DEADBAND - 5°F
RH - 59%, DEADBAND 5%

RELIEF DAMPERS - RELIEF DAMPERS FULLY OPEN WHEN SYSTEM IS IN ECONOMIZER MODE. IN CO2 MODE, RELIEF DAMPER SHALL OPEN 50% (ADJUSTABLE) AS DETERMINED BY TESTING & BALANCING.

3 AIR HANDLER FLOW DIAGRAM-SEQUENCE OF OPERATION
N.T.S.

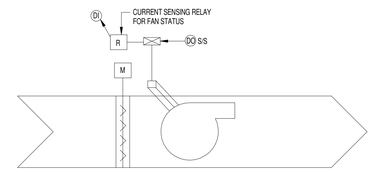

START/STOP - EXHAUST FAN (EF-1) SHALL BE INTERLOCKED WITH AHU-1. EF-1 SHALL START WHEN AHU-1 IS IN OPERATION. EF-1 SHALL STOP WHEN AHU-1 IS OFF. FAN SHALL SHUT OFF UPON ACTIVATION OF FIRE ALARM. ON FAN SHUTDOWN, CLOSE MOTORIZED ISOLATION (OBD) DAMPER.

UNOCCUPIED - DURING UNOCCUPIED MODE AS DETERMINED BY FMS, EXHAUST FAN SHALL SHUT DOWN. O.A. DAMPERS SHALL CLOSE.

1 EXHAUST FAN SEQUENCE OF OPERATION
N.T.S.

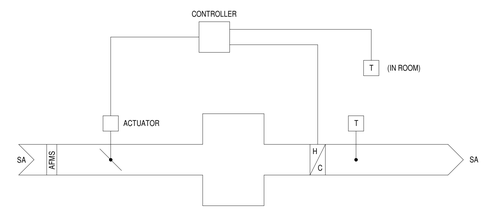

SEQUENCE OF OPERATIONS:

PROVIDE THE FOLLOWING FOR ALL AIR TERMINAL UNIT BOXES.
1. ROOM THERMOSTAT WITH INTEGRAL TEMPERATURE SENSOR, INTEGRAL DISPLAY, SETPOINT ADJUSTMENT, AND REMOTE COMMUNICATION PORT.
2. PRESSURE INDEPENDENT VOLUME CONTROL WITH ADJUSTABLE MAXIMUM AND MINIMUM AIRFLOW SETTINGS.
3. PROVIDE SCR VARIABLE CONTROL OF ELECTRIC HEAT STRIP.
4. DISABLE ELECTRIC HEAT AND RETURN THE VOLUME DAMPER TO A MINIMUM POSITION (30 %) WHEN ASSOCIATED AHU IS OFF.
5. PROVIDE A SUPPLY AIR SENSOR DOWNSTREAM OF THE HEATING COIL FOR USE IN MONITORING OVERALL VAV BOX PERFORMANCE.
6. OCCUPIED MODE SHALL BE DETERMINED BY SCHEDULE.

OCCUPIED MODE
1. THE CONTROLLER SHALL CONTINUE TO MONITOR ROOM TEMPERATURE AND RESET THE CFM SETPOINT UP OR DOWN IN RESPONSE TO COOLING/HEATING DEMAND
2. ON A RISE IN ROOM TEMPERATURE, MODULATE THE AIR DAMPER TOWARDS ITS MAXIMUM CFM SETPOINT UNTIL OCCUPIED CLG SETPOINT HAS BEEN ACHIEVED.
3. WHEN THE ZONE TEMPERATURE IS BETWEEN THE COOLING SETPOINT AND THE HEATING SETPOINT, THE ZONE DAMPER SHALL CONTROL TO ITS MINIMUM OCCUPIED AIRFLOW (ADJ.). ELECTRIC HEAT IS DISABLED.
4. ON A CONTINUED FALL IN ROOM TEMPERATURE, CONTINUE DELIVERING THE SCHEDULED MINIMUM AIR FLOW AND, INCREASE THE ELECTRIC HEATER OUTPUT PROPORTIONALLY UNTIL THE OCCUPIED HTG SETPOINT HAS BEEN ACHIEVED.

UNOCCUPIED MODE (BASED ON SCHEDULE)
1. THE AIR DAMPER SHALL REMAIN AT ITS MINIMUM 25% POSITION AND THE ELECTRIC HEAT SHALL REMAIN OFF.

2 TYP. VAV TERMINAL UNIT W/ REHEAT
N.T.S.

muñoz & company
1017 NORTH MAIN SUITE 300
SAN ANTONIO, TEXAS 78212
O. 210.349.1163 F. 210.525.1038
W W W . M U N O Z - C O . C O M

HALFF
5000 WEST MILITARY, SUITE 100
McALLEN, TEXAS 78503
TEL (956) 664-0286
FAX (956) 664-0282
Halff Associates firm registration number is F-312

STATE OF TEXAS
HUGO H. AVILA
90071
LICENSED
PROFESSIONAL ENGINEER
11-8-18

UTRGV
The University of Texas Rio Grande Valley

UNIVERSITY OF TEXAS RIO GRANDE VALLEY
SCHOOL OF MEDICINE
TEAM BASED LEARNING CENTER
PROJECT NO: 903-1159
EDINBURG, TX
100% CONSTRUCTION DOCUMENTS

Issue/Revision

#	DESCRIPTION	DATE

Sheet Title
MECHANICAL CONTROL AND FLOW DIAGRAMS

Date
NOVEMBER 08, 2018

Project Number	Drawn By	Checked By
33828	K.G/M.H	H.A.

Sheet Number
M-401

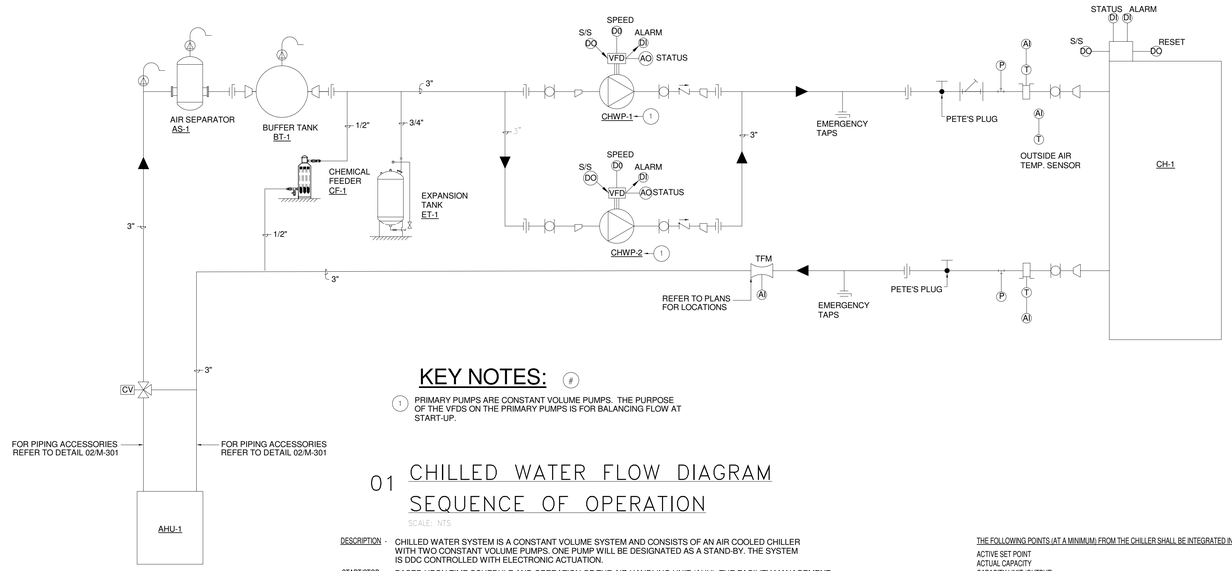

KEY NOTES: (#)

(1) PRIMARY PUMPS ARE CONSTANT VOLUME PUMPS. THE PURPOSE OF THE VFDS ON THE PRIMARY PUMPS IS FOR BALANCING FLOW AT START-UP.

01 CHILLED WATER FLOW DIAGRAM SEQUENCE OF OPERATION

SCALE: NTS

DESCRIPTION - CHILLED WATER SYSTEM IS A CONSTANT VOLUME SYSTEM AND CONSISTS OF AN AIR COOLED CHILLER WITH TWO CONSTANT VOLUME PUMPS. ONE PUMP WILL BE DESIGNATED AS A STAND-BY. THE SYSTEM IS DDC CONTROLLED WITH ELECTRONIC ACTUATION.

START/STOP - BASED UPON TIME SCHEDULE AND OPERATION OF THE AIR HANDLING UNIT (AHU), THE FACILITY MANAGEMENT SYSTEM (DDC) SHALL START AND STOP THE CHILLED WATER SYSTEM. VALVE V1 SHALL OPEN PRIOR TO START OF CHILLED WATER PUMP.

OCCUPIED MODE - THE START COMMAND WILL START THE CHILLED WATER PUMP. UPON PROOF OF PUMP STATUS, THE CHILLER WILL START. CHILLER RUN STATUS SHALL BE MONITORED THROUGH THE DDC. INTERNAL CHILLER CONTROLS SHALL STAGE COMPRESSORS TO MAINTAIN CHILLED WATER SUPPLY TEMPERATURE OF 42°F (ADJ.). THE CONSTANT VOLUME PUMP WILL SUPPLY CHILLED WATER TO THE AHU. A TWO WAY VALVE V2 WILL MODULATE TO MAINTAIN THE AHU SET POINTS.

UNOCCUPIED MODE - THE CHILLER SHALL STAGE DOWN AS REQUIRED TO MEET BUILDING UN-OCCUPIED SET POINTS. IF NO COOLING IS REQUIRED, CHILLER SHALL SHUT DOWN, THEN THE PUMP SHALL SHUT DOWN. IF COOLING IS REQUIRED, THE LEAD PUMP SHALL START AND CIRCULATE WATER TO MEET AHU'S UNOCCUPIED SET POINTS. IF CHILLED WATER TEMPERATURE REACHES 50°F, THE CHILLER SHALL START AND OPERATE AS DESCRIBED IN THE OCCUPIED MODE SEQUENCE.

FREEZE PROTECTION - OUTSIDE AIR TEMPERATURE SENSOR SHALL ENERGIZE LEAD PUMP WHEN OUTSIDE AIR TEMPERATURE FALLS BELOW 36°F.

CHILLER COMMUNICATION - CHILLER SHALL INTERFACE WITH DDC THROUGH CHILLER'S COMMUNICATION DEVICE. COORDINATE DEVICE TYPE WITH CHILLER MANUFACTURER.

LEAD/LAG - THE LEAD/LAG CONDITION OF THE SYSTEM PUMPS SHALL BE INITIATED THROUGH THE DDC TIME CLOCK FUNCTION TO ALTERNATE TO OBTAIN EQUIVALENT RUN TIMES.

VALVE V1 - LOW FLOW BYPASS VALVE AND CONTROLS, VALVE TYPE AND ACTUATOR MUST BE FAST ACTING. BYPASS CONTROL PID LOOP MUST BE FAST ACTING.

TFM - USED TO DETERMINE MINIMUM CHILL WATER FLOW REQUIREMENTS.

THE FOLLOWING POINTS (AT A MINIMUM) FROM THE CHILLER SHALL BE INTEGRATED INTO THE DDC SYSTEM:

ACTIVE SET POINT
ACTUAL CAPACITY
CAPACITY LIMIT (OUTPUT)
CAPACITY LIMIT (INPUT)
CHILLER ENABLE (INPUT)
CHILLER MODE SETPOINT
CHILLER ON/OFF
CHILLER POWER
CHILLER STATUS BACNET
COOL SETPOINT
EVAPORATOR ENTERING WATER TEMPERATURE
EVAPORATOR LEAVING WATER TEMPERATURE

CHILLER ALARM
WARNING ALARMS, MULTISTATE INPUT OBJECT
PROBLEM ALARMS, MULTISTATE INPUT OBJECT
FAULT ALARMS, MULTISTATE INPUT OBJECT
BACNET CLEAR ALARM

muñoz & company
1017 NORTH MAIN SUITE 300
SAN ANTONIO, TEXAS 78212
O. 210.349.1163 F. 210.525.1038
WWW.MUNOZ-CO.COM

HALFF
5000 WEST MILITARY, SUITE 100
McALLEN, TEXAS 78503
TEL (956) 664-0286
FAX (956) 664-0282
Halff Associates firm registration number is F-312

STATE OF TEXAS
HUGO H. AVILA
90071
LICENSED
PROFESSIONAL ENGINEER
11-8-18

UTRGV
The University of Texas Rio Grande Valley

UNIVERSITY OF TEXAS RIO GRANDE VALLEY
SCHOOL OF MEDICINE
TEAM BASED LEARNING CENTER
PROJECT NO: 903-1159
EDINBURG, TX
100% CONSTRUCTION DOCUMENTS

Issue/Revision

#	DESCRIPTION	DATE

Sheet Title
MECHANICAL CONTROL AND FLOW DIAGRAM

Date
NOVEMBER 08, 2018

Project Number	Drawn By	Checked By
33828	JB/KG	HA

Sheet Number
M-402

UTRGV SCHOOL OF MEDICINE TEAM BASED LEARNING

	Inputs										Outputs							Software Features																				
	Analog					Digital					Digital			Analog				Calculated					Alarms					Programs										
Description	Temperature 4-20ma	Pressure	Relative Humidity	Flow	Speed	Occupancy Sensor	Temperature Switch	Current Switch	Damper End Switch	Differential Pressure Switch	Auxiliary Contact	On-Off (HOA) START/STOP	Off-High-Low	Open/Close	0-10Vdc	4-20ma	3-15 psi	Floating Point	BTU	Percent Open - Position	Setpoint	Totalization	Runtime	KW/H-Demand	High Analog	Low Analog	Binary	Proof	Maintenance Alarm	Time of Day	Start/Stop Optimized	Enthalpy Optimization	Demand Limiting	DDC/PID Control	Event Program	Alarm Messages	Trends Reporting	Dynamic Color Graphic	Dynamic Trend Graphics	Comments
AIR HANDLING UNIT, AHU-1																																								
FAN START/STOP												X																										X		
FAN STATUS								X							X								X					X	X							X		X		
FAN VFD					X										X													X						X		X		X		
HIGH FAN DISCHARGE STATIC ALARM										X			X												X											X		X		
DUCT STATIC PRESSURE		X																			X																	X		
LOW TEMPERATURE ALARM							X						X													X										X		X		
COOLING COIL VALVE															X																			X				X		
HIGH DISCHARGE AIR TEMP. ALARM							X						X												X											X		X		
PRE FILTER		X																							X				X							X		X		
FINAL FILTER		X																							X				X							X		X		
AIR FLOW				X											X																							X		
DISCHARGE AIR TEMP	X																																					X		
LOW PRESSURE										X															X											X		X		
EXHAUST FAN, EF-1																																								
FAN START/STOP												X																												
FAN STATUS								X															X					X	X					X		X		X		
RETURN AIR FAN, RF-1,2																																								
FAN START/STOP												X																												
FAN STATUS								X															X					X	X					X		X		X		
FAN SPEED CONTROL					X										X													X						X		X		X		
BUILDING STATIC PRESSURE		X																			X																			
SINGLE DUCT BOXES																																								
AIR FLOW				X																					X	X				X								X		
VAV AIR DAMPER															X					X														X				X		
SPACE TEMPERATURE	X																				X				X	X				X						X		X		
SUPPLY AIR TEMPERATURE	X																																					X		
ELECTRIC REHEAT															X																			X				X		
CO2 CONCENTRATION (WHERE SHOWN)															X										X											X		X		
UNIT HEATER, UH-1																																								
STATUS								X															X																	
AIR COOLED CHILLER, CH-SM-1																																								
START/STOP												X																						X	X		X		
STATUS								X															X					X	X							X		X		
CHILLED WATER SYSTEM																																								
PUMP (2 THUS) START/STOP												X																						X			X		LEAD/LAG
PUMP STATUS								X															X					X	X							X		X		
PUMP SPEED CONTROL					X										X													X						X		X		X		
CHILLED WATER DIFF. PRESSURE		X																			X				X	X										X		X		
CHILLED WATER FLOW				X															X																			X		
CHILLED WATER RETURN TEMPERATURE	X																		X						X	X										X		X		
CHILLED WATER SUPPLY TEMPERATURE	X																		X						X	X										X		X		
WATER HEATER, WH-1																																								
ON/OFF												X																										X		
STATUS								X																														X		
EXTERIOR LIGHTING																																								
ON/OFF												X																										X		
STATUS								X																														X		
OTHER POINTS																																								
BUILDING POWER STATUS																																						X		
FIRE ALARM											X																X		X							X		X		

muñoz & company
1017 NORTH MAIN SUITE 300
SAN ANTONIO, TEXAS 78212
O. 210.349.1163 F. 210.525.1038
W W W . M U N O Z - C O . C O M

HALFF
5000 WEST MILITARY, SUITE 100
McALLEN, TEXAS 78503
TEL (956) 664-0286
FAX (956) 664-0282
Halff Associates firm registration number is F-312

STATE OF TEXAS
HUGO H. AVILA
90071
LICENSED
PROFESSIONAL ENGINEER
11-8-18

UTRGV
The University of Texas Rio Grande Valley

UNIVERSITY OF TEXAS RIO GRANDE VALLEY
SCHOOL OF MEDICINE
TEAM BASED LEARNING CENTER
PROJECT NO: 903-1159
EDINBURG, TX
100% CONSTRUCTION DOCUMENTS

Issue/Revision

#	DESCRIPTION	DATE

Sheet Title
MECHANICAL CONTROL INPUT/OUTPUT

Date
NOVEMBER 08, 2018

Project Number	Drawn By	Checked By
33828	JB/KG	HA

Sheet Number
M-403

AIR HANDLING UNIT SCHEDULE

UNIT								SUPPLY FAN												CHILLED WATER COIL													FILTER SECTION		
								FAN									MOTOR																		
TAG	SERVES	QTY	MANUF.	MODEL	LENGTH (in)	WEIGHT (lb)	V/PH/HZ	TYPE	QTY	CLASS	TOTAL AIRFLOW CFM	OUTSIDE FLOW MIN.CFM	OUTSIDE FLOW MAX.CFM	MAX RPM	BHP	E.S.P. (in H20)	T.S.P. (in H20)	V/PH/HZ	POWER HP	MAX RPM	CONTROL	SENSIBLE CAPACITY (MBH)	TOTAL CAPACITY (MBH)	EAT-DB °F	EAT-WB °F	LAT-DB °F	LAT-WB °F	F.V. (FT/MIN)	A.P.D. (in H20)	EWT °F	LWT °F	FLOW RATE (GPM)	W.P.D. (FT H20)	ROWS	FPI	CONTROL VALVE	PRE-FILTER TYPE	FINAL FILTER TYPE	DIRTY FILTER PD (in H20)
AHU-1	SCHOOL OF MEDICINE	1	ENERGY LABS	C75103	222	9,500	480/3/60	PLENUM	2	SWSI	18,160	2,970	3,300	1604	10.6	2	4.97	480/3/60	15	1800	VFD	429	594	81.3	66.8	55.2	54.2	400	0.64	44	56	103	10.9	6	8	3-WAY VAVLE	MERV 8 - 2"	MERV 13 - 12"	2.5

NOTES:
1. DOUBLE-WALL CONSTRUCTION WITH 4" THICK FOAM PANELS AND .4" FOAM INSULATION IN BASE.
2. PROVIDE MINIMUM 8" WELDED BASERAIL.
3. PROVIDE THERMAL BREAK WALLS, ROOF, AND BASE.
4. PROVIDE PIEZIO TYPE AIRFLOW MEASURING STATION MOUNTED IN FAN INLET BELL WITH VELTRON DPT2500 TRANSMITTER.
5. PROVIDE SINGLE PLENUM FAN WITH 2" SPRING ISOLATION. RIGID MOUNTING OF FAN NOT ACCEPTABLE.
6. PROVIDE MAGNAHELIC GAUGE FOR PRE-FILTERS AND FINAL FILTERS. TUBING FOR FILTERS AND AIRFLOW MEASURING STATION TO BE COPPER.
7. PROVIDE FAN MOTOR REMOVAL RAIL.
8. DIRTY FILTER ALLOWANCES SHALL BE 1" FOR PRE-FILTERS AND 1.5" FOR FINAL FILTERS.
9. PROVIDE MINIMUM 24" WIDE ACCESS DOORS AND MINIMUM 30" WIDE ACCESS DOOR IN FAN SECTION.
10. PROVIDE LED LIGHTS IN ALL ACCESS SECTIONS WITH A LIGHT SWITCH FOR EACH LIGHT.
11. DOOR TO FAN SECTION SHALL HAVE A DOOR SWITCH TO DE-ENERGIZE FAN MOTOR.
12. PROVIDE SPLIT CHILLED WATER COIL DRAIN PAN FOR EACH COIL WITH CONDENSATE DRAIN ON EACH SIDE. PROVIDE STEEL GRATING ON TOP OF DRAIN PAN.

UNIT HEATER SCHEDULE

MARK	MFGR.	MODEL	SERVES	ELECTRIC HEAT		ELECTRICAL			PERFORMANCE			REC. MOUNTING HEIGHT	APPROX. WEIGHT (LBS)	NOTES
				KW	STAGES	VOLTS/PH/HZ	AMPS	CONTROL VOLTAGE	TEMP RISE(°F)	AIR THROW	CFM			
UH-1	REDDI	F3FUH03C03	FIRE RISER	3.3	1	480/3/60	4	24	26	12 FT	400	9 FT	36	ALL

NOTES:
1. PROVIDE INTEGRAL DISCONNECT SWITCH.
2. PROVIDE UNIT-MOUNTED THERMOSTAT.
3. PROVIDE OVERHEAT PROTECTION, AUTOMATIC RESET TYPE.
4. PROVIDE HORIZONTAL DISCHARGE CONFIGURATION.
5. PROVIDE WALL/CEILING BRACKET.

AIR COOLED CHILLER SCHEDULE

DESCRIPTION												EVAPORATOR					CONDENSER	ELECTRICAL			NOTES
TAG	MFGR.	MODEL	CHW CAPACITY (TONS)	FULL LOAD AT ARI (EER)	MINIMUM FULL LOAD (EER)	ARI IPLV (EER)	MIN IPLV (EER)	COMP. TYPE	SERVICE	REFRIGERANT TYPE	REFRIGERANT CHARGE (LBS)	FLOW RATE (GPM)	EWT (°F)	LWT (°F)	FLUID	HEAD LOSS (FT)	AMBIENT (°F)	MCA	MOCP	V/PH/Hz	
CH-1	YORK	YCAL0056	51.3	10.11	10.1	14.7	13.7	SCROLL	CHW	R-410A	86	103	54.0	42.0	WATER	9.91	105	130	150	460/3/60	ALL

NOTES:
1. PROVIDE LOW SOUND OPTION WITH MAXIMUM SOUND POWER OF 88 Dba.
2. PROVIDE COMPRESSOR SUCTION AND DISCHARGE SERVICE VALVES & SUCTION LINE INSULATION.
3. PROVIDE SINGLE POINT ELECTRICAL CONNECTION, FACTORY POWERED 115V CONVENIENCE OUTLET, PHASE AND OVER/UNDER VOLTAGE PROTECTION AND NON-FUSED DISCONNECT.
4. PROVIDE BACNET CONTROL INTERFACE. COORDINATE WITH OWNER'S DDC CONTRACTOR PRIOR TO RELEASE.
5. PROVIDE SECURITY GRILLES, LOUVERED HAIL GUARDS AND CHILLER WRAPS COVERING PIPING TO CONDENSER COILS.
6. SHRINK WRAP UNIT TO PROTECT CHILLER DURING SHIPMENT.

PUMP SCHEDULE

MARK	SERVICE	TYPE	GPM	DYNAMIC HEAD-FT	RPM	MIN. EFF%	MOTOR DATA			MANUFACTURER	MODEL	NOTES
							HP	VOLT	PHASE			
CHWP-1,2	AHU-1	END-SUCT	103	34	1765	76.4	1.5	460	3	GRUNDFOS	LC 20709	ALL

NOTES:
1. PROVIDE WITH ODP PREMIUM EFFICIENCY MOTOR.
2. VFD SHALL NOT BE EQUIPMENT MOUNTED.
3. PROVIDE SHAFT GROUNDING KIT.

FAN SCHEDULE

MARK	CFM	SERVICE	TYPE	RPM	EXT SP (IN WG)	MOTOR SIZE (HP)	DRIVE	VOLTAGE	MAX. SONES	WEIGHT (LBS)	CONTROL	MANUFACTURER	MODEL	NOTES
RAF-1	15675	1ST FLOOR	INLINE	1231	1	7.5	BELT	460/3	23	724	BAS	GREENHECK	QEI-27-I	ALL
EF-1	1460	RESTROOMS/JAN	CENT DB	1066	0.5	0.3	BELT	115	8.4	64	AHU-1	GREENHECK	GB-141	ALL

NOTES
1. FAN SHALL HAVE FACTORY INSTALLED, PRE-WIRED INTEGRAL DISCONNECT SWITCH FROM FACTORY.
2 FAN SHALL BE PROVIDED WITH FACTORY-MOUNTED SPEED CONTROL.
3. FAN SHALL BE CONTROLLED THROUGH BUILDING AUTOMATION SYSTEM.
3. FAN SHALL BE INTERLOCKED WITH AHU-1.

GENERAL NOTES, TYPICAL OF ALL FANS:
A. CONTRACTOR SHALL CONFIRM DUCT PENETRATIONS, WEIGHT SHALL NOT EXCEED SCHEDULED PRODUCT.
B. ALL FANS INCLUDE DRIVE LOSSES. SUPPLIER SHALL PROVIDE DRIVE LOSS CALCULATIONS WITH EACH FAN DURING SUBMITTALS.
C. SOUND POWER LEVELS/SONES AND FAN RPM SHALL NOT EXCEED SCHEDULED VALUES.

EXPANSION TANK SCHEDULE

MARK	ACCEPTANCE VOLUME (GALLONS)	TANK VOLUME (GALLONS)	OPERATING PRESSURE (PSI)	DESIGN WORKING PRESSURE (PSI)	DIMENSIONS DIAMETER X HEIGHT	MODEL	MANUFACTURER	NOTES
ET-1	2.4	8.0	12	30	12" x 19.5"	D-15V	BELL & GOSSETT	1

NOTES:
1. PROVIDE EXPANSION TANK WITH AUTOMATIC AIR VENT MODEL #87.

BUFFER TANK SCHEDULE

MARK	TANK VOLUME (GALLONS)	MAX DESIGN WORKING PRESSURE (PSI)	DIMENSIONS DIAMETER X HEIGHT	MODEL NO.	MANUFACTURER	NOTES
BT-1	300	125	36" x 85.5"	JBTR-24-300	THE JOHN WOOD COMPANY	ALL

NOTES:
1. PROVIDE HIGH CAPACITY AUTOMATIC AIR VENT #107A AT BUFFER TANK INLET.
2. PROVIDE AUTOMATIC AIR VENT WITH PIPING OFFSET TO BEYOND BUFFER TANK FOOTPRINT.

AIR SEPARATOR SCHEDULE

MARK	MAX. FLOW (GPM)	DESIGN WORKING PRESSURE (PSIG)	INLET & OUTLET SIZE (IN.)	DIMENSIONS DIAMETER X HEIGHT	MANUFACTURER MODEL NO.
AS-1	103	150	3"	8.6" X 23.7"	SPIROTHERM - VSR300

CHEMICAL FEEDER SCHEDULE

MARK	TANK CAPACITY (GAL)	MAX. PRESSURE (PSI)	DIMENSIONS DIAMETER X HEIGHT	MODEL NO.	MANUFACTURER
CF-1	5	300	10" x 19.75"	VTF-5HP	NEPTUNE

HIGH WALL-COOL ONLY-MINI SPLIT

INDOOR UNIT MARK	FCU-1
INDOOR UNIT TYPE	WALL
MAX SUPPLY CFM	915
MIN SUPPLY CFM	512
ENTERING AIR (DB/WB)	80/67
TOTAL COOLING CAP. (BTUH)	34400
SENSIBLE COOLING CAP. (BTUH)	22160
VOLTAGE/PHASE	208-230/1
MCA	N/A
MAX. FUSE SIZE	N/A
MANUFACTURER	DAIKIN
MODEL NO.	FTX36NVJU
WEIGHT (LBS)	38
CONDENSING UNIT MARK	FCCU-1
VOLTAGE/PHASE	208-230/1
MCA	17
MAX. FUSE SIZE (AMPS)	20
AMB. AIR TEMP.	95
REFRIGERANT	R-410A
AMBIENT RANGE	(-22°F) - 115°F
MANUFACTURER	DAIKIN
MODEL NO.	RK36NMVJU
WEIGHT (LBS)	133
SEER	15.9
MAX EQUIV. LINE LENGTH (FT)	98
MAX. VERTICAL RISE (FT)	66
NOTES	ALL

NOTES:
1. ELECTRICAL CONTRACTOR TO PROVIDE SINGLE CIRCUIT POWER FROM SERVICE TO OUTDOOR UNIT AND WIRE TO INDOOR UNIT.
2. PROVIDE INDOOR UNITS WITH MOUNTING BRACKETS IF REQUIRED.
3. PROVIDE WALL MOUNTED PROGRAMMABLE T-STAT.
4. CONTRACTOR TO PROVIDE PAD OR CURB FOR MOUNTING CONDENSING UNIT.
5. BOTH LIQUID AND SUCTION LINES MUST BE INSULATED (1/2" FLEXIBLE ELASTOMERIC IS ACCEPTABLE UNLESS INDICATED OTHERWISE IN SPECIFICATIONS).
6. SIGHT GLASSES, FILTER DRYERS, AND FIELD SUPPLIED EXPANSION VALVES ARE NOT TO BE USED.
7. PROVIDE INVERTER DRIVEN COMPRESSOR FOR IMPROVED HUMIDITY CONTROL.
8. INSTALL PER MANUFACTURERS INSTRUCTIONS AND PIPING RECOMMENDATIONS.
9. PROVIDE WIRELESS REMOTE CONTROLLER WITH HOLDER AND LOSS PREVENTION CHAIN.
10. 5 YEAR PARTS WARRANTY

muñoz & company
1017 NORTH MAIN SUITE 300
SAN ANTONIO, TEXAS 78212
O. 210.349.1163 F. 210.525.1038
WWW.MUNOZ-CO.COM

HALFF
5000 WEST MILITARY, SUITE 100
McALLEN, TEXAS 78503
TEL (956) 664-0286
FAX (956) 664-0282
Halff Associates firm registration number is F-312

STATE OF TEXAS
HUGO H. AVILA
90071
LICENSED
PROFESSIONAL ENGINEER
11-8-18

UTRGV
The University of Texas Rio Grande Valley

UNIVERSITY OF TEXAS RIO GRANDE VALLEY
SCHOOL OF MEDICINE
TEAM BASED LEARNING CENTER
PROJECT NO: 903-1159
EDINBURG, TX
100% CONSTRUCTION DOCUMENTS

Issue/Revision

#	DESCRIPTION	DATE

Sheet Title
MECHANICAL SCHEDULES I

Date
NOVEMBER 08, 2018

Project Number	Drawn By	Checked By
33828	K.G/M.H	H.A.

Sheet Number
M-501

SINGLE DUCT BOX UNIT SCHEDULE

	MARK	MFGR	MODEL	BOX SIZE INLET (DIA)	BOX SIZE OUTLET	COOLING CFM OCC. MAX	COOLING CFM OCC. MIN	COOLING CFM UNOCC.MIN	ELECTRIC HEAT COIL CFM	KW	VOLT/PH	STEPS	EAT	MIN. LAT	LAT	MAX. LAT	NOTES
1ST FLOOR	VAV-1-01	PRICE	SDV	12	16"x15"	1090	380	354	545	6.2	480-3	SCR	54	88	90	92	ALL
	VAV-1-02	PRICE	SDV	12	16"x15"	980	352	354	490	5.6	480-3	SCR	54	88	90	92	ALL
	VAV-1-03	PRICE	SDV	10	14"x12"	840	250	246	420	4.8	480-3	SCR	54	88	90	92	ALL
	VAV-1-04	PRICE	SDV	12	16"x15"	1015	175	354	508	5.8	480-3	SCR	54	88	90	92	ALL
	VAV-1-05	PRICE	SDV	8	12"x10"	670	200	158	335	3.8	480-3	SCR	54	88	90	92	ALL
	VAV-1-06	PRICE	SDV	6	12"x8"	330	100	89	165	1.9	277-1	SCR	54	88	90	92	ALL
	VAV-1-07	PRICE	SDV	6	12"x8"	280	85	89	140	1.6	277-1	SCR	54	88	90	92	ALL
	VAV-1-08	PRICE	SDV	8	12"x10"	375	-	-	-	-	277-1	-	-	-	-	-	ALL
	VAV-1-09	PRICE	SDV	6	12"x8"	280	85	89	140	1.6	277-1	SCR	54	88	90	92	ALL
	VAV-1-10	PRICE	SDV	6	12"x8"	260	80	89	130	1.5	277-1	SCR	54	88	90	92	ALL
	VAV-1-11	PRICE	SDV	6	12"x8"	360	110	89	180	2.1	277-1	SCR	54	88	90	92	ALL
	VAV-1-12	PRICE	SDV	6	12"x8"	235	75	89	120	1.4	277-1	SCR	54	88	90	92	ALL
	VAV-1-13	PRICE	SDV	8	12"x10"	540	160	158	270	3.1	480-3	SCR	54	88	90	92	ALL
	VAV-1-14	PRICE	SDV	8	12"x10"	270	160	158	135	1.5	480-3	SCR	54	88	90	92	ALL
	VAV-1-15	PRICE	SDV	8	12"x10"	400	120	158	200	2.3	480-3	SCR	54	88	90	92	ALL
	VAV-1-16	PRICE	SDV	6	12"x8"	290	90	89	145	1.7	277-1	SCR	54	88	90	92	ALL
	VAV-1-17	PRICE	SDV	6	12"x8"	340	100	89	170	1.9	277-1	SCR	54	88	90	92	ALL
	VAV-1-18	PRICE	SDV	6	12"x8"	225	70	89	115	1.3	277-1	SCR	54	88	90	92	ALL
	VAV-1-19	PRICE	SDV	6	12"x8"	340	100	89	170	1.9	277-1	SCR	54	88	90	92	ALL
	VAV-1-20	PRICE	SDV	6	12"x8"	190	60	89	95	1.1	277-1	SCR	54	88	90	92	ALL
	VAV-1-21	PRICE	SDV	6	12"x8"	340	100	89	170	1.9	277-1	SCR	54	88	90	92	ALL
	VAV-1-22	PRICE	SDV	6	12"x8"	190	60	89	95	1.1	277-1	SCR	54	88	90	92	ALL
	VAV-1-23	PRICE	SDV	8	12"x10"	450	135	158	225	2.6	480-3	SCR	54	88	90	92	ALL
	VAV-1-24	PRICE	SDV	4	12"x8"	70	70	-	-	-	277-1	-	-	-	-	-	ALL
2ND FLOOR	VAV-2-01	PRICE	SDV	8	12"x10"	375	-	-	-	-	277-1	-	-	-	-	-	ALL
	VAV-2-02	PRICE	SDV	8	12"x10"	475	145	158	240	2.7	480-3	SCR	54	88	90	92	ALL
	VAV-2-03	PRICE	SDV	8	12"x10"	500	150	158	250	2.9	480-3	SCR	54	88	90	92	ALL
	VAV-2-04	PRICE	SDV	6	12"x8"	250	85	89	125	1.4	277-1	SCR	54	88	90	92	ALL
	VAV-2-05	PRICE	SDV	8	12"x10"	460	140	158	230	2.6	480-3	SCR	54	88	90	92	ALL
	VAV-2-06	PRICE	SDV	10	14"x12"	830	250	246	415	4.8	480-3	SCR	54	88	90	92	ALL
	VAV-2-07	PRICE	SDV	8	12"x10"	470	140	158	235	2.7	480-3	SCR	54	88	90	92	ALL
	VAV-2-08	PRICE	SDV	8	12"x10"	520	155	158	260	3.0	480-3	SCR	54	88	90	92	ALL
	VAV-2-09	PRICE	SDV	6	12"x8"	180	65	89	90	1.0	277-1	SCR	54	88	90	92	ALL
	VAV-2-10	PRICE	SDV	8	12"x10"	420	95	158	210	2.4	480-3	SCR	54	88	90	92	ALL
	VAV-2-11	PRICE	SDV	12	16"x15"	1200	-	-	-	-	277-1	-	-	-	-	-	ALL
	VAV-2-12	PRICE	SDV	8	12"x10"	380	115	158	190	2.2	480-3	SCR	54	88	90	92	ALL
	VAV-2-13	PRICE	SDV	6	12"x8"	360	70	89	180	2.1	277-1	SCR	54	88	90	92	ALL
	VAV-2-14	PRICE	SDV	6	12"x8"	180	65	89	90	1.0	277-1	SCR	54	88	90	92	ALL
	VAV-2-15	PRICE	SDV	8	12"x10"	365	110	158	185	2.1	480-3	SCR	54	88	90	92	ALL
	VAV-2-16	PRICE	SDV	6	12"x8"	350	110	89	175	2.0	277-1	SCR	54	88	90	92	ALL
	VAV-2-17	PRICE	SDV	6	12"x8"	270	65	89	135	1.5	277-1	SCR	54	88	90	92	ALL
	VAV-2-18	PRICE	SDV	6	12"x8"	370	85	89	185	2.1	277-1	SCR	54	88	90	92	ALL
	VAV-2-19	PRICE	SDV	8	12"x10"	465	140	158	235	2.7	480-3	SCR	54	88	90	92	ALL
	VAV-2-20	PRICE	SDV	6	12"x8"	370	85	89	185	2.1	277-1	SCR	54	88	90	92	ALL
	VAV-2-21	PRICE	SDV	6	12"x8"	235	70	89	120	1.4	277-1	SCR	54	88	90	92	ALL
	VAV-2-22	PRICE	SDV	8	12"x10"	480	145	158	240	2.7	480-3	SCR	54	88	90	92	ALL
	VAV-2-23	PRICE	SDV	8	12"x10"	410	125	158	205	2.3	480-3	SCR	54	88	90	92	ALL
	VAV-2-24	PRICE	SDV	8	12"x10"	410	165	158	205	2.3	480-3	SCR	54	88	90	92	ALL
	VAV-2-25	PRICE	SDV	8	12"x10"	495	150	158	250	2.9	480-3	SCR	54	88	90	92	ALL

NOTES:

1. SIZE UNITS ARE GIVEN IN INCHES, PRESSURE UNITS ARE INCHES OF WATER PRESSURE DROP IS IN FEET OF WATER.
2. GENERAL AND SUBCONTRACTORS SHALL VERIFY ALL SPACE REQUIRMENTS PRIOR TO INSTALLATION AND DUCT FABRICATION.
3. UNIT CONTROLLERS SHALL BE SUPPLIED BY CONTROLS CONTRACTOR AND FACTORY MOUNTED BY BOX MANUFACTURER. UNIT SHALL BE 208V INPUT.
4. BOX MANUFACTURER SHALL PROVIDE DDC CONTROLS TRANSFORMER.
5. VERIFY CONTROL BOX LOCATION (RIGHTHAND/LEFTHAND) FROM PLANS.
6. PROVIDE UNIT WITH MOUNTING BRACKETS.
7. PROVIDE UNITWITH INTEGRAL FUSED DISCONNECT.

SINGLE DUCT BOX UNIT SCHEDULE ALTERNATE #3

	MARK	MFGR	MODEL	BOX SIZE INLET (DIA)	BOX SIZE OUTLET	COOLING CFM OCC. MAX	COOLING CFM OCC. MIN	COOLING CFM UNOCC.MIN	ELECTRIC HEAT COIL CFM	KW	VOLT/PH	STEPS	EAT	MIN. LAT	LAT	MAX. LAT	NOTES
1ST FLOOR	VAV-1-01	PRICE	SDV	12	16"x15"	1090	380	79	545	6.2	480-3	SCR	54	88	90	92	ALL
	VAV-1-02	PRICE	SDV	12	16"x15"	980	352	79	490	5.6	480-3	SCR	54	88	90	92	ALL
	VAV-1-03	PRICE	SDV	10	14"x12"	840	250	55	420	4.8	480-3	SCR	54	88	90	92	ALL
	VAV-1-04	PRICE	SDV	12	16"x15"	1015	175	79	508	5.8	480-3	SCR	54	88	90	92	ALL
	VAV-1-05	PRICE	SDV	8	12"x10"	670	200	35	335	3.8	480-3	SCR	54	88	90	92	ALL
	VAV-1-06	PRICE	SDV	6	12"x8"	330	100	20	165	1.9	277-1	SCR	54	88	90	92	ALL
	VAV-1-07	PRICE	SDV	6	12"x8"	280	85	20	140	1.6	277-1	SCR	54	88	90	92	ALL
	VAV-1-08	PRICE	SDV	8	12"x10"	375	-	-	-	-	277-1	-	-	-	-	-	ALL
	VAV-1-09	PRICE	SDV	6	12"x8"	280	85	20	140	1.6	277-1	SCR	54	88	90	92	ALL
	VAV-1-10	PRICE	SDV	6	12"x8"	260	80	20	130	1.5	277-1	SCR	54	88	90	92	ALL
	VAV-1-11	PRICE	SDV	6	12"x8"	360	110	20	180	2.1	277-1	SCR	54	88	90	92	ALL
	VAV-1-12	PRICE	SDV	6	12"x8"	235	75	20	120	1.4	277-1	SCR	54	88	90	92	ALL
	VAV-1-13	PRICE	SDV	8	12"x10"	540	160	35	270	3.1	480-3	SCR	54	88	90	92	ALL
	VAV-1-14	PRICE	SDV	8	12"x10"	270	160	35	135	1.5	480-3	SCR	54	88	90	92	ALL
	VAV-1-15	PRICE	SDV	8	12"x10"	400	120	35	200	2.3	480-3	SCR	54	88	90	92	ALL
	VAV-1-16	PRICE	SDV	6	12"x8"	290	90	20	145	1.7	277-1	SCR	54	88	90	92	ALL
	VAV-1-17	PRICE	SDV	6	12"x8"	340	100	20	170	1.9	277-1	SCR	54	88	90	92	ALL
	VAV-1-18	PRICE	SDV	6	12"x8"	225	70	20	115	1.3	277-1	SCR	54	88	90	92	ALL
	VAV-1-19	PRICE	SDV	6	12"x8"	340	100	20	170	1.9	277-1	SCR	54	88	90	92	ALL
	VAV-1-20	PRICE	SDV	6	12"x8"	190	60	20	95	1.1	277-1	SCR	54	88	90	92	ALL
	VAV-1-21	PRICE	SDV	6	12"x8"	340	100	20	170	1.9	277-1	SCR	54	88	90	92	ALL
	VAV-1-22	PRICE	SDV	6	12"x8"	190	60	20	95	1.1	277-1	SCR	54	88	90	92	ALL
	VAV-1-23	PRICE	SDV	8	12"x10"	450	135	35	225	2.6	480-3	SCR	54	88	90	92	ALL
	VAV-1-24	PRICE	SDV	4	12"x8"	70	70	-	-	-	277-1	-	-	-	-	-	ALL
2ND FLOOR	VAV-2-01	PRICE	SDV	8	12"x10"	375	-	-	-	-	277-1	-	-	-	-	-	ALL
	VAV-2-02	PRICE	SDV	8	12"x10"	475	145	35	240	2.7	480-3	SCR	54	88	90	92	ALL
	VAV-2-03	PRICE	SDV	8	12"x10"	500	150	35	250	2.9	480-3	SCR	54	88	90	92	ALL
	VAV-2-04	PRICE	SDV	6	12"x8"	250	85	20	125	1.4	277-1	SCR	54	88	90	92	ALL
	VAV-2-05	PRICE	SDV	8	12"x10"	460	140	35	230	2.6	480-3	SCR	54	88	90	92	ALL
	VAV-2-06	PRICE	SDV	10	14"x12"	830	250	55	415	4.8	480-3	SCR	54	88	90	92	ALL
	VAV-2-07	PRICE	SDV	8	12"x10"	470	140	35	235	2.7	480-3	SCR	54	88	90	92	ALL
	VAV-2-08	PRICE	SDV	8	12"x10"	520	155	35	260	3.0	480-3	SCR	54	88	90	92	ALL
	VAV-2-09	PRICE	SDV	6	12"x8"	180	65	20	90	1.0	277-1	SCR	54	88	90	92	ALL
	VAV-2-10	PRICE	SDV	8	12"x10"	420	95	35	210	2.4	480-3	SCR	54	88	90	92	ALL
	VAV-2-11	PRICE	SDV	12	16"x15"	1200	-	-	-	-	277-1	-	-	-	-	-	ALL
	VAV-2-12	PRICE	SDV	8	12"x10"	380	115	35	190	2.2	480-3	SCR	54	88	90	92	ALL
	VAV-2-13	PRICE	SDV	6	12"x8"	360	70	20	180	2.1	277-1	SCR	54	88	90	92	ALL
	VAV-2-14	PRICE	SDV	6	12"x8"	180	65	20	90	1.0	277-1	SCR	54	88	90	92	ALL
	VAV-2-15	PRICE	SDV	8	12"x10"	365	110	35	185	2.1	480-3	SCR	54	88	90	92	ALL
	VAV-2-16	PRICE	SDV	6	12"x8"	350	110	20	175	2.0	277-1	SCR	54	88	90	92	ALL
	VAV-2-17	PRICE	SDV	6	12"x8"	270	65	20	135	1.5	277-1	SCR	54	88	90	92	ALL
	VAV-2-18	PRICE	SDV	6	12"x8"	370	85	20	185	2.1	277-1	SCR	54	88	90	92	ALL
	VAV-2-19	PRICE	SDV	8	12"x10"	465	140	35	235	2.7	480-3	SCR	54	88	90	92	ALL
	VAV-2-20	PRICE	SDV	6	12"x8"	370	85	20	185	2.1	277-1	SCR	54	88	90	92	ALL
	VAV-2-21	PRICE	SDV	6	12"x8"	235	70	20	120	1.4	277-1	SCR	54	88	90	92	ALL
	VAV-2-22	PRICE	SDV	8	12"x10"	480	145	35	240	2.7	480-3	SCR	54	88	90	92	ALL
	VAV-2-23	PRICE	SDV	8	12"x10"	410	125	35	205	2.3	480-3	SCR	54	88	90	92	ALL
	VAV-2-24	PRICE	SDV	8	12"x10"	410	165	35	205	2.3	480-3	SCR	54	88	90	92	ALL
	VAV-2-25	PRICE	SDV	8	12"x10"	495	150	35	250	2.9	480-3	SCR	54	88	90	92	ALL

NOTES:

1. SIZE UNITS ARE GIVEN IN INCHES, PRESSURE UNITS ARE INCHES OF WATER PRESSURE DROP IS IN FEET OF WATER.
2. GENERAL AND SUBCONTRACTORS SHALL VERIFY ALL SPACE REQUIRMENTS PRIOR TO INSTALLATION AND DUCT FABRICATION.
3. UNIT CONTROLLERS SHALL BE SUPPLIED BY CONTROLS CONTRACTOR AND FACTORY MOUNTED BY BOX MANUFACTURER. UNIT SHALL BE 208V INPUT.
4. BOX MANUFACTURER SHALL PROVIDE DDC CONTROLS TRANSFORMER.
5. VERIFY CONTROL BOX LOCATION (RIGHTHAND/LEFTHAND) FROM PLANS.
6. PROVIDE UNIT WITH MOUNTING BRACKETS.
7. PROVIDE UNITWITH INTEGRAL FUSED DISCONNECT.
8. PROVIDE THERMAL DISPERSION SENSOR AS PART OF ALTERNATE BID #3.

VFD SCHEDULE

MARK	SERVES	EQUIP	HP	INPUT VOLT/PH	OUTPUT VOLT/PH	MOUNTING	ENCLOSURE	MANUF.	MODEL	HxWxD (IN.)	NOTES
VFD-1	AHU-1	SA FAN 1,2	30	480/3	480/3	WALL	NEMA 1	YASKAWA	E7	13.8 x 9.5 x 8.30	ALL
VFD-2	CHWP-1	CHW PUMP	2	480/3	480/3	WALL	NEMA 1	YASKAWA	E7	11.02 x 5.51 x 6.30	ALL
VFD-3	CHWP-2	CHW PUMP	2	480/3	480/3	WALL	NEMA 1	YASKAWA	E7	11.02 x 5.51 x 6.30	ALL
VFD-4	RAF-1	RETURN FAN	7.5	480/3	480/3	WALL	NEMA 1	YASKAWA	E7	11.02 x 5.51 x 6.30	ALL

NOTES:

1. VFD SHALL BE PROVIDED BY MECHANICAL CONTRACTOR AND WIRED BY ELECTRICAL CONTRACTOR.
2. PROVIDE BACNET DEVICE FOR INTERFACE WITH DDC SYSTEM. COORDINATE WITH OWNER'S DDC CONTRACTOR PRIOR TO RELEASE.
3. PROVIDE WITH AUXILARY CONTACT FOR DISCONNECT SWITCH INTERFACE.

GRILLE/DIFFUSER/REGISTER SCHEDULE

MARK	SERVICE	DESCRIPTION	MANUFACTURER MODEL NO.	MAX. NC. LEVEL (1)	REMARKS
A	SUPPLY	24"X24" MODULE SIZE, ALUMINUM, LOUVERED, LAY IN DIFFUSER WITH 4 WAY THROW, ROUND NECK, FACE SIZE AS INDICATED BELOW.	TITUS OMNI-AA	30	#26 WHITE FINISH
B	SUPPLY	12"X12" MODULE SIZE, ALUMINUM, LOUVERED, SURFACE-MOUNTED DIFFUSER WITH 4-WAY THROW, ROUND NECK, FACE SIZE AS INDICATED BELOW.	TITUS OMNI-AA	30	#26 WHITE FINISH
C	SUPPLY	24"X24" MODULE SIZE, ALUMINUM, LOUVERED, SURFACE-MOUNTED DIFFUSER WITH 4 WAY THROW, ROUND NECK, FACE SIZE AS INDICATED BELOW.	TITUS OMNI-AA	30	#26 WHITE FINISH
D	SUPPLY	SURFACE MOUNTED SUPPLY DIFFUSER WITH 3/4" SPACING, ALUMINUM CONSTRUCTION, DOUBLE DEFLECTION WITH OPPOSED BLADE DAMPER.	TITUS 300FL	30	#26 WHITE FINISH
E	SUPPLY	ALUMINUM DRUM LOUVER WITH INDIVIDUALLY ADJUSTABLE BLADES, MINIMUM 50° ANGLE OF ROTATION, OPPOSED BLADE DAMPER.	TITUS DL	35	#26 WHITE STANDARD
G	RETURN	24"X24" EGGCRATE FACE, CEILING RETURN GRILL WITH BORDER FOR LAY-IN CEILING, ALUMINUM CONSTRUCTION.	TITUS 50F	30	#26 WHITE FINISH
H	RETURN	24"X24" EGGCRATE FACE, SURFACE MOUNTED CEILING RETURN GRILLE ALUMINUM CONSTRUCTION.	TITUS 50F	30	#26 WHITE FINISH
M	SUPPLY	SURFACE MOUNTED SUPPLY SLOT DIFFUSER WITH 3-1" WIDE SLOT 4FT IN LENGTH.BORDER TYPE 22. PROVIDE INSULATED PLENUM BOX.	TITUS ML-39	30	#26 WHITE FINISH
N	RETURN	SURFACE MOUNTED RETURN SLOT DIFFUSER WITH 3-1" WIDE SLOT 4FT IN LENGTH.BORDER TYPE 22. PROVIDE INSULATED PLENUM BOX.	TITUS ML-39	30	#26 WHITE FINISH
P	RETURN	12"X12" EGGCRATE FACE, CEILING RETURN GRILLE, SURFACE MOUNTED, ALUMINUM CONSTRUCTION.	TITUS 50F	30	#26 WHITE FINISH
Q	RETURN	24"X24" SURFACE MOUNTED RETURN GRILLE WITH 3/4" SPACING. ALUMINUM CONSTRUCTION, 45° DEFLECTION. JOINING WITH ALUMINUM MULLION.	TITUS 3FS	20	#26 WHITE FINISH

F =THIS WILL DESIGNATE A STEEL FIRE RATED AIR DEVICE TYPE.

CBA = COLOR BY ARCHITECT

* = SEE ARCHITECTURAL DRAWINGS PROPER BORDER TYPES

AIR OUTLET DESIGNATION ON PLANS

MARK A - 200 / 12 X 8 — AIR FLOW (CFM / RECTANGULAR FACE SIZE (WHERE APPLICABLE

CAPACITY	FACE	NECK/FLEXIBLE CONNECTION
0-150	6 X 6	6"
151-285	9 X 9	8"
286-440	12 X 12	10"
441-550	12 X 12	12"
551-750	15 X 15	14"
750-1000	18 X 18	16"

NOTE: COORDINATE ALL AIR DEVICE TYPE WITH ARCHITECTURAL RCP.

muñoz & company
1017 NORTH MAIN SUITE 300
SAN ANTONIO, TEXAS 78212
O. 210.349.1163 F. 210.525.1038
WWW.MUNOZ-CO.COM

HALFF
5000 WEST MILITARY, SUITE 100
McALLEN, TEXAS 78503
TEL (956) 664-0286
FAX (956) 664-0282
Halff Associates firm registration number is F-312

STATE OF TEXAS
HUGO H. AVILA
90071
LICENSED PROFESSIONAL ENGINEER
11-8-18

UTRGV
The University of Texas Rio Grande Valley

UNIVERSITY OF TEXAS RIO GRANDE VALLEY
SCHOOL OF MEDICINE
TEAM BASED LEARNING CENTER
PROJECT NO: 903-1159
EDINBURG, TX
100% CONSTRUCTION DOCUMENTS

Issue/Revision

#	DESCRIPTION	DATE

Sheet Title
MECHANICAL SCHEDULES II

Date
NOVEMBER 08, 2018

Project Number	Drawn By	Checked By
33828	K.G/M.H	H.A.

Sheet Number
M-502

ELECTRICAL GENERAL LEGEND

ALL SYMBOLS SHOWN MAY NOT APPEAR IN ALL DRAWINGS.
SYMBOLS ARE SHOWN SCHEMATIC AND MAY NOT BE TO SCALE.

SYMBOL	DESCRIPTION	MNTG. HT. UNO (SEE NOTE 1)
	LIGHTING	
	2'x4' FLUORESCENT LIGHT FIXTURE HATCHING = EMERGENCY LIGHT	REFER TO ARCH.CLG. PLAN
	2'x2' FLUORESCENT LIGHT FIXTURE HATCHING = EMERGENCY LIGHT	REFER TO ARCH.CLG. PLAN
	FLUORESCENT STRIP LIGHT HATCHING = EMERGENCY LIGHT	REFER TO ARCH.CLG. PLAN
	DOWNLIGHT HATCHING = EMERGENCY LIGHT	REFER TO ARCH.CLG. PLAN
	TRACK LIGHT WITH HEADS	REFER TO ARCH.CLG. PLAN
	WALLPACK	REFER TO ARCH.CLG. PLAN
	EMERGENCY FIXTURE	REFER TO ARCH.CLG. PLAN
	POLE MOUNTED FIXTURE	REFER TO ARCH.CLG. PLAN
	EXIT LIGHT, CEILING OR WALL MOUNTED - SHADING INDICATING SINGLE OR DOUBLE FACE; DIRECTIONAL ARROWS AS INDICATED	REFER TO ARCH.CLG. PLAN
$ OC	WALL SWITCH SENSOR, PASSIVE DUAL TECHNOLOGY BASIS OF DESIGN: nLIGHT #WSX PDT WH	48"AFF
$ 1D	LOW VOLTAGE PUSH-BUTTON WALLPOD, RAISE/LOWER DIMMING WITHOUT WIRES BASIS OF DESIGN: nLIGHT #nPODM DX WH	48"AFF
$ L	LOW VOLTAGE PUSH-BUTTON WALLPOD BASIS OF DESIGN: nLIGHT #nPODM WH	48"AFF
$ 2D	LOW VOLTAGE PUSH-BUTTON WALLPOD BASIS OF DESIGN: nLIGHT #nPODM WH	48"AFF
$ 3D	LOW VOLTAGE PUSH-BUTTON WALLPOD, 2-POLE, RAISE/LOWER DIMMING WITHOUT WIRES BASIS OF DESIGN: nLIGHT #nPODM 2P DX WH	48"AFF
PP	POWER/RELAY PACK BASIS OF DESIGN: nLIGHT #nPP16	-
EP	UL924 SHUNT RELAY BASIS OF DESIGN: MYERS #nRLY-SW-2	-
PD	POWER/RELAY PACK, OCCUPANCY CONTROLLED DIMMING BASIS OF DESIGN: nLIGHT #nPP16 D	-
C1	LOW VOLTAGE CEILING MOUNT SENSOR, PASSIVE DUAL TECHNOLOGY, LARGE MOTION / EXTENDED RANGE 360 LENS BASIS OF DESIGN: nLIGHT #nCM PDT 10	-
C2	LOW VOLTAGE CEILING MOUNT SENSOR, LARGE MOTION / EXTENDED RANGE 360 LENS BASIS OF DESIGN: nLIGHT #nCM 10	-
C3	LOW VOLTAGE CEILING MOUNT SENSOR, HIGH BAY 360 LENS BASIS OF DESIGN: nLIGHT #nCM 6	-
DS	LOW VOLTAGE CEILING MOUNT SENSOR, PHOTOCONTROL W/ AUTO DIMMING BASIS OF DESIGN: nLIGHT #nCM ADCX	-
DE	LOW VOLTAGE CEILING MOUNT SENSOR, PASSIVE DUAL TECHNOLOGY, LARGE MOTION / EXTENDED RANGE 360 LENS, PHOTOCONTROL W/ AUTO DIMMING BASIS OF DESIGN: nLIGHT #nCM PDT 10 ADCX	-
PL	PLUG LOAD BASIS OF DESIGN: nLIGHT #nPP20 PL	-
PC	PHOTOCELL	2' BELOW ROOF
	SECURITY SYSTEM	
	CAMERA - PROVIDE DATA DROP AT THIS LOCATION	-
CR	CARD READER	48"AFF
MD	MOTION DETECTOR	-
K	SECURITY KEYPAD	48"AFF
P	PANIC BUTTON	-

SYMBOL	DESCRIPTION	MNTG. HT. UNO (SEE NOTE 1)
	POWER - RECEPTACLES	
	SINGLE RECEPTACLE - 20A/125V/1P/3W/G NEMA 5-20R	15" AFF
	DUPLEX RECEPTACLE - 20A/125V/1P/3W/G NEMA 5-20R	15" AFF
GD	FURNISH AND INSTALL GFI TYPE RECEPTACLE. FOR GARBAGE DISPOSER. CONTROL THE GARBAGE DISPOSER VIA A MOTOR RATED WALL SWITCH, WITH PILOT LIGHT, 6" ABS. MAKE FINAL CONNECTIONS. - 20A/125V/1P/3W/G NEMA 5-20R	6" BELOW COUNTER
WP	DUPLEX GFI WEATHER PROOF RECEPTACLE - 20A/125V/1P/3W/G NEMA 5-20R	15" AFF
	USB/TAMPER RESISTANT RECEPTACLE - 20A/125V/1P/3W/G NEMA 5-20R COOPER #TR7746X - X = CONFIRM COLOR WITH ARCHITECT	15" AFF
	QUADRAPLEX RECEPTACLE (TWO DUPLEX RECEPTACLES UNDER ONE COVERPLATE)	15" AFF
	SPECIAL PURPOSE RECEPTACLE (NEMA NO. OR RATING AS INDICATED)	15" AFF
	FLOORBOX, FSR FL500P-8. PROVIDE WITH (2) DUPLEXES. FOR A/V AND DATA, BRACKETS TO HAVE KNOCKOUTS, TO BE USED AS SPARE. CONTRACTOR SHALL ROUTE (1) 3/4" CONDUIT FOR POWER. REFER TO TECHNOLOGY PLANS FOR TECHNOLOGY CONDUIT AND DEVICE REQUIREMENTS. ROUTE CONDUITS TO NEAREST WALL AND EXTEND TO PLENUM SPACE. PROVIDE WITH PULLSTRINGS AND IDENTIFY FLOOR BOX IT IS GOING TO. PROVIDE WITH A FULL FLOOR BOX SYSTEM. PROVIDE WITH COVER AND COORDINATE WITH ARCHITECT ON COVER FINISH.	-
PT	POKE-THRU, FSR FL500P-8. PROVIDE WITH (2) DUPLEXES. FOR A/V AND DATA, BRACKETS TO HAVE KNOCKOUTS, TO BE USED AS SPARE. CONTRACTOR SHALL ROUTE (1) 3/4" CONDUIT FOR POWER. REFER TO TECHNOLOGY PLANS FOR TECHNOLOGY CONDUIT AND DEVICE REQUIREMENTS. ROUTE CONDUITS TO NEAREST WALL AND EXTEND TO PLENUM SPACE. PROVIDE WITH PULLSTRINGS AND IDENTIFY FLOOR BOX IT IS GOING TO. PROVIDE WITH A FULL FLOOR BOX SYSTEM. PROVIDE WITH COVER AND COORDINATE WITH ARCHITECT ON COVER FINISH.	-
	CONTROLLED RECEPTACLE. PROVIDE WITH UL LISTED AND REQUIRED BY NEC 2014 POWER SYMBOL MARKINGS, RECEPTACLE AND FACE PLATE TO BE GREEN. RECEPTACLE CIRCUIT TO BE CONNECTED THRU RECEPTACLE CONTROLLED CONTACTOR. SEE SHEET E-303	15" AFF
	CONTROLLED QUAD RECEPTACLE (TWO DUPLEX RECEPTACLES UNDER ONE COVERPLATE). PROVIDE WITH UL LISTED AND REQUIRED BY NEC 2014 POWER SYMBOL MARKINGS, RECEPTACLE AND FACE PLATE TO BE GREEN. RECEPTACLE CIRCUIT TO BE CONNECTED THRU RECEPTACLE CONTROLLED CONTACTOR.SEE SHEET E-303	15" AFF
$ M	MOTOR RATED SWITCH	-
TV#	DUPLEX RECEPTACLE FOR MONITOR - 20A/125V/1P/3W/G NEMA 5-20R. REFER TO ARCHITECHURAL ELEVATIONS FOR EXACT LOCATIONS. TV6 AT 66", TV7 AT 72"	66 or 72" AFF
	POWER - SPECIALTY POWER	
J	JUNCTION BOX - SIZE & MOUNTING AS REQUIRED TYPICAL OF ALL	-
J PSF	POWER FOR PLUMBING SENSOR FLUSHES. VERIFY LOCATION AND POWER REQUIREMENTS PRIOR TO ROUGH-IN	-
J ETP	POWER FOR ELECTRONIC TRAP PRIMER. VERIFY LOCATION AND POWER REQUIREMENTS PRIOR TO ROUGH-IN	-
J MPS	POWER ABOVE CEILING FOR OWNER PROVIDED PROJECTOR SCREEN. VERIFY LOCATION PRIOR TO ROUGH-IN	-
J MS	POWER FOR MOTORIZED SHADE. PROVIDE COMPATABLE CONTROLS. VERIFY POWER REQUIREMENTS PRIOR TO ROUGH-IN AND CONTROLS LOCATION	-
J PRJ	POWER ABOVE CEILING FOR OWNER PROVIDED PROJECTOR. VERIFY LOCATION PRIOR TO ROUGH-IN	-
J MD	POWER FOR MOTORIZED DOOR. PROVIDE J-BOX ABOVE CEILING FOR CIRCUIT WIRING. VERIFY ELECTRICAL REQUIREMENTS PRIOR TO ROUGH-IN	-
J ACS	POWER FOR ACCESS CONTROL SYSTEM. PROVIDE J-BOX ABOVE CEILING FOR CIRCUIT WIRING. COORDINATE ELECTRICAL CONNECTION TO ACCESS CONTROL WITH MANUFACTURER INSTRUCTIONS	-
D	POWER FOR HAND DRYER. VERIFY LOCATION AND ELECTRICAL REQUIREMENTS PRIOR TO ROUGH-IN	REFER TO ARCH PLANS
	POWER	
	COMBINATION STARTER - DISCONNECT SWITCH	AS REQUIRED
	DISCONNECT SWITCH - 30/-3 INDICATES 30A, NONFUSED, 3-POLE; 30/30/3 INDICATES 30A, 30A FUSE, 3-POLE	AS REQUIRED
	DOUBLE THROW DISCONNECT SWITCH - 30/-3 INDICATES 30A, NONFUSED, 3-POLE; 30/30/3 INDICATES 30A, 30A FUSE, 3-POLE	AS REQUIRED
	TRANSFORMER	
	PANELBOARD	-
	CIRCUIT HOMERUN TO PANELBOARD (2#12, 1#12G, 3/4"C 20A/1P CB UNO)	-
EPO	EMERGENCY POWER OFF SWITCH	-

SYMBOL	DESCRIPTION	MNTG. HT. UNO (SEE NOTE 1)
	FIRE ALARM	
DH	DOOR HOLDER	-
F	FIRE ALARM PULL STATION	48" AFF
F	FIRE ALARM AUDIBLE/VISUAL SIGNAL	88" AFF
F	FIRE ALARM AUDIBLE SIGNAL	88" AFF
F	FIRE ALARM VISUAL SIGNAL	88" AFF
S	FIRE ALARM AUDIBLE/VISUAL SIGNAL - VOICE EVAC	88" AFF
S	FIRE ALARM SPEAKER - VOICE EVAC	88" AFF
FS	FIRE ALARM SPRINKLER FLOW SWITCH	-
TS	FIRE ALARM SPRINKLER TAMPER SWITCH	-
S	FIRE ALARM SMOKE DETECTOR CEILING OR WALL MOUNTED	88" AFF
H	HEAT DETECTOR CEILING OR WALL MOUNTED	-
D	DUCT SMOKE DETECTORS	-
FACP	FIRE ALARM CONTROL PANEL	-
FAAP	FIRE ALARM ANNUNCIATOR PANEL	-
FAWC	FIRE ALARM WIRELESS COMMUNICATOR	-
	COMMUNICATION	
	DATA/TELEPHONE OUTLET. WALL MOUNTED - STUB 3/4" CONDUIT ABOVE ACCESSIBLE CEILING	15"AFF
	DATA OUTLET. WALL MOUNTED - STUB 3/4" CONDUIT ABOVE ACCESSIBLE CEILING	15"AFF
	TELEPHONE OUTLET. WALL MOUNTED - STUB 3/4" CONDUIT ABOVE ACCESSIBLE CEILING	15"AFF
W	TELEPHONE OUTLET. WALL MOUNTED - STUB 3/4" CONDUIT ABOVE ACCESSIBLE CEILING	48"AFF
	FLOOR MOUNTED DATA/TELEPHONE OUTLET - FLUSH MOUNTED UNO	-
	FLOOR MOUNTED DATA OUTLET - FLUSH MOUNTED UNO	-
	FLOOR MOUNTED TELEPHONE OUTLET - FLUSH MOUNTED UNO	-
	SPEAKER, WALL MOUNTED	-
S	SPEAKER, CEILING MOUNTED	-
M	MICROPHONE OUTLET	-
C C DBL	CLOCK - SINGLE OR DOUBLE FACE	96"AFF
AP	WIRELESS ACCESS POINT - PROVIDE DATA DROP AT THIS LOCATION	-
	CABLE TRAY	-
	TELEPHONE BOARD	-
	INTERCOM	48"AFF
B	BELL	48"AFF
	BUZZER	48"AFF
TV	FOR TELEVISION PROVIDE • QTY(1) - POWER OUTLET (3/4"C) • QTY(1) - DATA OUTLET (3/4"C) • QTY(1) - A/V J-BOX (1-1/4"C)	VERIFY MOUNTING HEIGHT WITH ARCHITECT

GENERAL ABBREVIATIONS

ABS	ABOVE BACK SPLASH	EX	EXISTING	MTD	MOUNT OR MOUNTED	OFPC	OFFICE OF FACILITIES PLANNING AND CONSTRUCTION	UF	UNDERFLOOR
AFF	ABOVE FINISHED FLOOR	F	FUSE	NC (N.C.)	NORMALLY CLOSED	RCPT(S)	RECEPTACLE(S)	UG	UNDERGROUND
ARS	AREA OF RESCUE SYSTEM	FSD	FIRE & SMOKE DAMPER	NF	NONFUSED	PNL	PANEL	WG	WIRE GUARD
BFC	BELOW FINISHED CEILING	G	GROUND (EQUIPMENT)	NIC	NOT IN CONTRACT	SD	SMOKE DAMPER	WP	WEATHERPROOF
C	CONDUIT	GAP	GENERATOR ANNUNCIATOR PANEL	TYP	TYPICAL	SO (S.O.)	SPACE ONLY	WP/WIU	WEATHERPROOF WITH WHILE-IN-USE COVER
CB	CIRCUIT BREAKER	GFI	GROUND FAULT INTERRUPTER	EP	ELECTRICAL PRIMARY	SP	SPARE	XFMR	TRANSFORMER
CLG	CEILING	IC	INTERRUPTING CAPACITY	NL	NIGHT LIGHT	ST (S.T.)	SHUNT TRIP	UNO	UNLESS NOTED OTHERWISE
EC	EMPTY CONDUIT	IG	ISOLATED GROUND	NO (N.O.)	NORMALLY OPEN	SW	SWITCH		

NOTES:
1. 48" AFF INDICATES TO TOP OF DEVICE;
   15" AFF INDICATES TO BOTTOM OF DEVICE;
   ALL OTHER MOUNTING HEIGHTS REFER TO CENTERLINE OF DEVICE.

ELECTRICAL GENERAL NOTES

ELECTRICAL SITE PLAN NOTES

A. ELECTRICAL CONTRACTOR SHALL CONTACT UTILITY COMPANY SERVICE REPRESENTATIVE AND COORDINATE SERVICE INSTALLATION PRIOR TO COMMENCING WORK.
B. ELECTRICAL CONTRACTOR SHALL INCLUDE IN HIS BID TO OWNER ALL FEES AND CONSTRUCTION COSTS CHARGED BY UTILITY COMPANY FOR MAIN LINE EXTENSIONS AND NEW SERVICE INSTALLATION IN ADDITION TO TRENCHING, SAW CUTTING, AND PATCHING.
C. ELECTRICAL CONTRACTOR SHALL COORDINATE SERVICE ENTRANCE REQUIREMENTS FOR TELEPHONE WITH LOCAL TELEPHONE SERVICE COMPANY PRIOR TO COMMENCING WORK.
D. ELECTRICAL CONTRACTOR SHALL INSTALL ALL UNDERGROUND CONDUIT, CONDUCTORS, AND CABLE AS SPECIFIED IN PROJECT MANUAL.
E. INFORMATION IN ELECTRICAL DRAWINGS HAS BEEN TAKEN FROM RECORD DRAWINGS AND SITE SURVEY. CONTRACTOR SHALL FIELD VERIFY ALL EXISTING CONDITIONS BEFORE COMMENCING WORK AND REPORT ANY AND ALL DISCREPANCIES BETWEEN ACTUAL CONDITIONS AND THESE PLANS TO THE ENGINEER/ARCHITECT IMMEDIATELY.
F. ELECTRICAL CONTRACTOR SHALL COORDINATE WITH CONTRACTOR AND OFPC WITH REGEROS TO COORDINATING SERVICE PRIOR TO COMMENCING WORK.

ELECTRICAL POWER PLAN NOTES

A. INSTALL AND MAKE FINAL CONNECTIONS OF ELECTRICAL FIXTURES PROVIDED BY CASEWORK CONTRACTOR.
B. MOUNTING HEIGHT OF DEVICES AS PER PROJECT SPECIFICATIONS UNLESS NOTED OTHERWISE.
C. COORDINATE ROUGH-IN LOCATION OF ALL DEVICES WITH ARCHITECTURAL ELEVATIONS DETAILS, AND PLANS.
D. REFER TO ARCHITECTURAL MILLWORK AND ELEVATION PLANS FOR EXACT LOCATION AND MOUNTING HEIGHT OF ALL WIRING DEVICES.
E. ALL PENETRATIONS THROUGH FIRE RATED WALLS SHALL HAVE SOUND RETARDING/ABSORBING FIRE STOP MATERIAL.
F. USE #10 AWG CONDUCTORS FOR 20AMPERE, 120 VOLT BRANCH CIRCUITS LONGER THAN 100 FEET.
G. USE #10 AWG CONDUCTORS FOR 20 AMPERE, 277 VOLT BRANCH CIRCUITS LONGER THAN 200 FEET.

ELECTRICAL SPECIAL SYSTEMS PLAN NOTES

A. COORDINATE EXACT LOCATION AND MOUNTING HEIGHT OF ALL POWER SOURCE WIRING IN ACCORDANCE WITH ARCHITECTURAL MILLWORK. ALL INSTALLATIONS SHALL COMPLY WITH ADA REQUIREMENTS.
B. CONTRACTOR SHALL VERIFY ALL REQUIREMENTS BEFORE ANY ROUGH-IN IN ORDER TO COORDINATE MANUFACTURER'S DRAWINGS FOR EQUIPMENT LOCATION AND INSTALLATION ACCESSORIES.
C. COORDINATE RUNS FOR CONDUIT UP IN JOIST AND FOR SUSPENDING REQUIREMENTS IN ACCORDANCE WITH STRUCTURAL PLANS.
D. ALL FIRE ALARM, INTERCOM, DATA, AND TV DEVICES SHALL BE STUBBED UP TO ABOVE ACCESSIBLE CEILING AND TO CABLE TRAY IF PRESENT. THE CONTRACTOR SHALL PROVIDE J-HOOKS AND CONDUITS TO EXTEND CABLING TO WALLS.
E. ALL PENETRATIONS THROUGH FIRE RATED WALLS SHALL HAVE SOUND RETARDING/ABSORBING FIRE STOP MATERIAL.
F. FURNISH AND INSTALL DUCT SMOKE DETECTOR FOR RETURN DUCT. COORDINATE EXACT LOCATION IN ACCORDANCE MECHANICAL DRAWINGS.
G. ALL DEVICES SHOWN ON DRAWINGS ARE SYMBOLIC ONLY. THE ENTIRE FIRE ALARM SYSTEM SHALL BE IN FULL COMPLIANCE AND MEET ALL CODES AND REQUIREMENTS OF THE LOCAL ADMINISTRATIVE AUTHORITY. ANY MODIFICATIONS REQUIRED TO PROVIDE COMPLIANCE SHALL BE MADE AT NO ADDITIONAL COST TO THE OWNER OR ARCHITECT/ENGINEER.
H. FIRE ALARM LICENSE HOLDER SHALL ASSUME ALL RESPONSIBILITY FOR DESIGN AND SUBMIT DRAWINGS TO JURISDICTION HAVING AUTHORITY AND ABIDE BY ALL OTHER REQUIREMENTS PER NFPA.
I. CONDUITS SHALL BE REAMED AND COMPLETED WITH CONNECTORS AND INSULATED BUSHINGS AT BOTH ENDS.
J. BETWEEN ANY TWO PULL POINTS THERE SHALL BE NO CONDUIT WITH GREATER THAN 180 DEGREES OF BENDS OR EQUIVALENT.
K. WHERE CONDUIT LENGTH EXCEEDS 100FT AND/OR TWO 90 DEGREE BENDS OR EQUIVALENT PROVIDE PULL BOXES AS REQUIRED.
L. ALL ZONE CONDUITS (HOME RUN) FOR LOW VOLTAGE COMMUNICATIONS CABLING SHALL BE MARKED AT THEIR TERMINUS WITH A TAG THAT IDENTIFIES "FIRE ALARM, DATA, INTERCOM, ETC" (ROOM NAME AND NUMBER) WHERE THE OTHER END OF THE CONDUIT TERMINATES.
M. ALL CABLES ABOVE CEILING SHALL BE PLENUM RATED.
N. REFER TO GROUNDING AND BONDING DETAILS ON THIS CONSTRUCTION SET AND ON THE DIVISION 27 SET. CONTRACTOR SHALL GROUND/BOND PER THESE REQUIREMENTS.

ELECTRICAL LIGHTING PLAN NOTES

A. REFER TO ARCHITECTURAL REFLECTED CEILING PLAN (RCP) FOR EXACT LOCATION OF LIGHT FIXTURES. FURNISH FIXTURES WITH TRIM COMPATIBLE WITH THE TYPE OF CEILING AS INDICATED ON THE RCP.
B. CONNECT EXIT/EMERGENCY LIGHTS AND EMERGENCY BALLASTS IN EMERGENCY LIGHTS IN EACH SPACE TO UNSWITCHED HOT LEG OF LOCAL LIGHTING CIRCUIT.
C. COORDINATE PLACEMENT OF FIXTURES WITH ACTUAL INSTALLATION OF MECHANICAL EQUIPMENT AND DUCTWORK.
D. CONTRACTOR SHALL INCLUDE IN HIS BID TO OWNER THE COST OF ALL CONTROL PANELS, DEVICES, NETWORK CABLING AND LOW OR LINE VOLTAGE WIRING FOR A COMPLETE LIGHTING CONTROL SYSTEM AS SPECIFIED. REFER TO MANUFACTURERS WIRING DIAGRAMS AND INSTALLATION MANUALS PRIOR TO BID.
E. CONTROL SYSTEM FOR LIGHTING IS DESIGNED TO MEET ASHRAE 90.1(2013) CODE. ALL LIGHT SWITCHES SHALL OPERATE AS BOTH MANUAL AND AUTOMATIC LINE VOLTAGE SWITCHES OR AS MOMENTARY DIGITAL SWITCHES IN CONJUNCTION WITH RELAY CONTROL PANELS, UNLESS OTHERWISE NOTED.
F. ALL CONTROL AND POWER WIRING FOR LIGHTING CONTROL SYSTEM SHALL BE IN CONDUIT.
G. COORDINATE LOCATION OF LIGHTS WITH DIFFUSERS AND GRILLS.
H. ALL CABLES ABOVE CEILING SHALL BE PLENUM RATED. PROVIDE CONDUIT AS SPECIFIED.
I. TYPICAL FOR OFFICES. LIGHTING OCCUPANCY SENSOR TO BE SET TO COME ON AUTOMATICALLY TO 50%.

MECHANICAL & PLUMBING EQUIPMENT NOTES

A. REFER TO MECHANICAL EQUIPMENT CONNECTION SCHEDULE(S) FOR DISCONNECTING MEANS, CONDUIT, WIRING AND ADDITIONAL CONNECTION INFORMATION TO MECHANICAL EQUIPMENT.
B. FOR MECHANICAL EQUIPMENT, FURNISH AND INSTALL BRANCH CIRCUIT AND DISCONNECTING MEANS PER MECHANICAL EQUIPMENT CONNECTION SCHEDULE(S).
C. COORDINATE EXACT LOCATION AND MOUNTING HEIGHT OF ALL POWER SOURCE WIRING IN ACCORDANCE WITH ARCHITECTURAL MILLWORK.
D. CONTRACTOR SHALL VERIFY ALL REQUIREMENTS BEFORE ANY ROUGH-IN IN ORDER TO COORDINATE MANUFACTURER'S DRAWINGS FOR EQUIPMENT LOCATION AND INSTALLATION ACCESSORIES.
E. COORDINATE RUNS FOR CONDUIT UP IN JOIST AND FOR SUSPENDING REQUIREMENTS IN ACCORDANCE STRUCTURAL PLANS.
F. REFER TO DIVISION 23 FOR ALL MECHANICAL EQUIPMENT LOCATION(S). COORDINATE EXACT LOCATION(S) OF ALL MECHANICAL EQUIPMENT WITH MECHANICAL DRAWINGS TO MEET ELECTRICAL AND MECHANICAL REQUIRED CLEARANCE BY THE LATEST CODE. SOME EQUIPMENT MAYBE LOCATED ON ROOF.
G. COORDINATE ALL ROOF PENETRATIONS WITH CONTRACTOR AND ALL OTHER TRADES. SEAL ALL ROOF PENETRATIONS AS RECOMMENDED BY THE WARRANTY SYSTEM. VERIFY WITH GENERAL AND ROOFING CONTRACTOR.
H. ELECTRICAL CONTRACTOR SHALL PROVIDE J-BOX AND ONE INCH CONDUIT (1"C) FOR H.V.A.C. CONTROLS AND THERMOSTATS. COORDINATE EXACT LOCATION WITH MECHANICAL CONTRACTOR. REFER TO MECHANICAL PALNS FOR THEMOSTAT LOCATIONS.
I. ELECTRICAL CONTRACTOR SHALL PROVIDE STARTERS, RELAYS, CONTACTORS AND THE REQUIRED ELECTRICAL ACCESSORIES FOR AN OPERABLE MECHANICAL SYSTEM.
J. ALL ELECTRICAL CONDUIT AND WIRING SHALL BE CONCEALED. IF NOT POSSIBLE PROVIDE SURFACE MOUNT STEEL RACEWAY. STEEL RACEWAY SHALL BE WIREMOLD #V2100 SERIES. PROVIDE ALL RELATED #V2100 SERIES ACCESSORIES FOR AN OPERABLE SYSTEM.
K. CONTRACTOR SHALL PROVIDE 120V POWER TO ANY SMOKE DAMPERS REQUIRED AT ALL SMOKE PARTITIONS. INCLUDE A 20A/1P CIRCUIT BREAKER AND WIRING 2#12,#12G,3/4"EMT AS REQUIRED BY HVAC SYSTEM. REFER TO MECHANICAL PLANS. PROVIDE RELAYS FOR FIRE ALARM INTERFACE AS REQUIRED.
L. CONTRACTOR SHALL PROVIDE 120V POWER TO ALL DDC CONTROL PANELS AS REQUIRED BY CONTROLS CONTRACTOR. INCLUDE A 20A/1P CIRCUIT BREAKER AND WIRING 2#12,#12G,3/4"EMT AS REQUIRED BY HVAC SYSTEM.
M. VERIFY REQUIRED PLUMBING AND MECHANICAL POWER CONNECTION PRIOR TO ROUGH-IN.

THE CONTRACTOR SHALL INCLUDE IN BID ALL COST ASSOCIATED WITH ROUGH-IN FOR THE SPECIAL SYSTEMS. REFER TO DIVISIONS 27 AND 28

COMMISSIONING NOTES

1. COMMISSIONING AGENCY

A COMMISSIONING AGENCY WILL BE CONTRACTED DIRECTLY WITH AND BY THE OWNER FOR THIS PROJECT. THE COMMISSIONING AGENCY HAS OVERALL RESPONSIBILITY FOR PLANNING AND COORDINATING THE COMMISSIONING PROCESS. HOWEVER COMMISSIONING INVOLVES ALL PARTIES TO THE DESIGN AND CONSTRUCTION PROCESS, INCLUDING THE CONTRACTOR.

2. CONTRACTOR RESPONSIBILITY

THE ELECTRICAL SPECIFICATIONS DEFINES THE CONTRACTOR'S RESPONSIBILITIES WITH RESPECT TO THE COMMISSIONING PROCESS. EACH CONTRACTOR AND SUB-CONTRACTOR SHALL REVIEW THE SPECIFICATION SECTIONS, AND SHALL INCLUDE IN THEIR BIDS FOR CARRYING OUT THE WORK DESCRIBED, AS IT APPLIES TO EACH DIVISION AND SECTION OF THOSE SPECIFICATIONS, INDIVIDUALLY AND COLLECTIVELY.

3. DESCRIPTION OF WORK

THE PURPOSE OF THE COMMISSIONING PROCESS IS TO PROVIDE THE OWNER/OPERATOR OF THE FACILITY WITH ASSURANCE THAT THE BUILDING ENVELOPE, MECHANICAL, PLUMBING, AND ELECTRICAL SYSTEMS HAVE BEEN INSTALLED ACCORDING TO THE CONTRACT DOCUMENTS, AND OPERATE WITHIN THE PERFORMANCE GUIDELINES SET OUT IN THE DESIGN INTENT DOCUMENTS AND THE SPECIFICATIONS. THE COMMISSIONING AGENCY WILL PROVIDE THE OWNER WITH AN UNBIASED, OBJECTIVE VIEW OF THE SYSTEMS INSTALLATION, OPERATION, AND PERFORMANCE. THE COMMISSIONING PROCESS DOES NOT TAKE AWAY OR REDUCE THE RESPONSIBILITY OF THE INSTALLING CONTRACTORS TO PROVIDE A FINISHED PRODUCT THAT IS INSTALLED AND FULLY FUNCTIONAL IN ACCORDANCE WITH THE CONTRACT DOCUMENTS. COMMISSIONING IS INTENDED TO ENHANCE THE QUALITY OF SYSTEM START-UP AND AID IN THE ORDERLY COMPLETION AND TRANSFER OF SYSTEMS FOR BENEFICIAL USE BY THE OWNER. THE COMMISSIONING AGENCY WILL BE THE LEADER OF THE COMMISSIONING TEAM, PLANNING AND COORDINATING ALL COMMISSIONING ACTIVITIES IN CONJUNCTION WITH THE DESIGN PROFESSIONALS, SUBCONTRACTORS, MANUFACTURERS AND EQUIPMENT SUPPLIERS. THE GENERAL CONTRACTOR, MECHANICAL CONTRACTOR, ALL DIVISION 22 AND 23 SUB-CONTRACTORS, AND THE ELECTRICAL CONTRACTOR, DIVISION 26 & 28, SHALL BE RESPONSIBLE FOR COOPERATING, AND COORDINATING THEIR WORK, WITH THE COMMISSIONING AGENCY. EACH SHALL ALSO BE RESPONSIBLE FOR CARRYING OUT ALL THE PHYSICAL ACTIVITIES REQUIRED FOR INSTALLATION OF COMPONENTS AND SYSTEMS AND FOR OPERATING THEM DURING THE COMMISSIONING PROCESS AS REQUIRED BY THE PROJECT SPECIFICATIONS.

4. COMMISSIONING PLAN

THE PROJECT COMMISSIONING PLAN SHALL BE DEVELOPED BY THE COMMISSIONING AGENCY AND SHALL INCLUDE THE FOLLOWING:

A. A NARRATIVE DESCRIPTION OF THE ACTIVITIES THAT WILL BE ACCOMPLISHED DURING EACH PHASE OF COMMISSIONING, INCLUDING THE PERSONNEL INTENDED TO ACCOMPLISH EACH OF THE ACTIVITIES.
B. A LISTING OF THE SPECIFIC EQUIPMENT OR SYSTEMS TO BE TESTED AND A DESCRIPTION OF THE TESTS TO BE PERFORMED.
C. FUNCTIONS TO BE TESTED INCLUDING CALIBRATIONS AND ECONOMIZER CONTROLS. OTHER TEST LISTED ON THE CONSTRUCTION DOCUMENTS.
D. CONDITIONS UNDER WHICH THE TEST WILL BE PERFORMED. TESTING SHALL AFFIRM WINTER AND SUMMER DESIGN CONDITIONS AND FULL OUTSIDE AIR CONDITIONS.
E. MEASURABLE CRITERIA FOR PERFORMANCE.

REFER TO PROJECT SPECIFICATIONS FOR ADDITIONAL COMMISSIONING PLAN REQUIREMENTS.

5. PROJECT CLOSEOUT PROCEDURES

CONTRACTOR SHALL CERTIFY THAT LIGHTING CONTROLS ARE INSTALLED PER SECTION 405 AND PROVIDE TESTING PER PARA C408.3 OF THE 2015 INTERNATIONAL ENERGY CONSERVATION CODE . LIGHTING AND FUNCTIONAL TESTING OF CONTROLS AND AUTOMATIC LIGHTING SYSTEMS SHALL INCLUDE: OCCUPANCY SENSOR CONTROLS, TIME SWITCH CONTROLS, AND DAYLIGHT RESPONSIVE CONTROLS.

6. REQUIRED DOCUMENTS

THE FOLLOWING DOCUMENTS SHALL BE PROVIDE TO THE BUILDING OWNER WITHIN 90 DAYS OF THE RECEIPT OF THE CERTIFICATE OF OCCUPANCY.

A. FINAL AS BUILT DRAWINGS
B. OPERATING AND MAINTENANCE MANUALS
C. FINAL CERTIFIED TEST REPORT REPORTS FOR LIGHTING AND CONTROLS
D. FINAL COMMISSIONING REPORT

muñoz & company
1017 NORTH MAIN SUITE 300
SAN ANTONIO, TEXAS 78212
O. 210.349.1163 F. 210.525.1038
WWW.MUNOZ-CO.COM

HALFF
5000 WEST MILITARY, SUITE 100
McALLEN, TEXAS 78503
TEL (956) 664-0286
FAX (956) 664-0282
Halff Associates firm registration number is F-312

STATE OF TEXAS
THOMAS E. DEARMIN
54352
REGISTERED PROFESSIONAL ENGINEER
11-8-18

UTRGV
The University of Texas Rio Grande Valley

UNIVERSITY OF TEXAS RIO GRANDE VALLEY
SCHOOL OF MEDICINE
TEAM BASED LEARNING CENTER
PROJECT NO: 903-1159
EDINBURG, TX
100% CONSTRUCTION DOCUMENTS

Issue/Revision

#	DESCRIPTION	DATE

Sheet Title
ELECTRICAL GENERAL LEGEND

Date
NOVEMBER 08, 2018

Project Number	Drawn By	Checked By
33828	G.C.	T.D.

Sheet Number
E-001

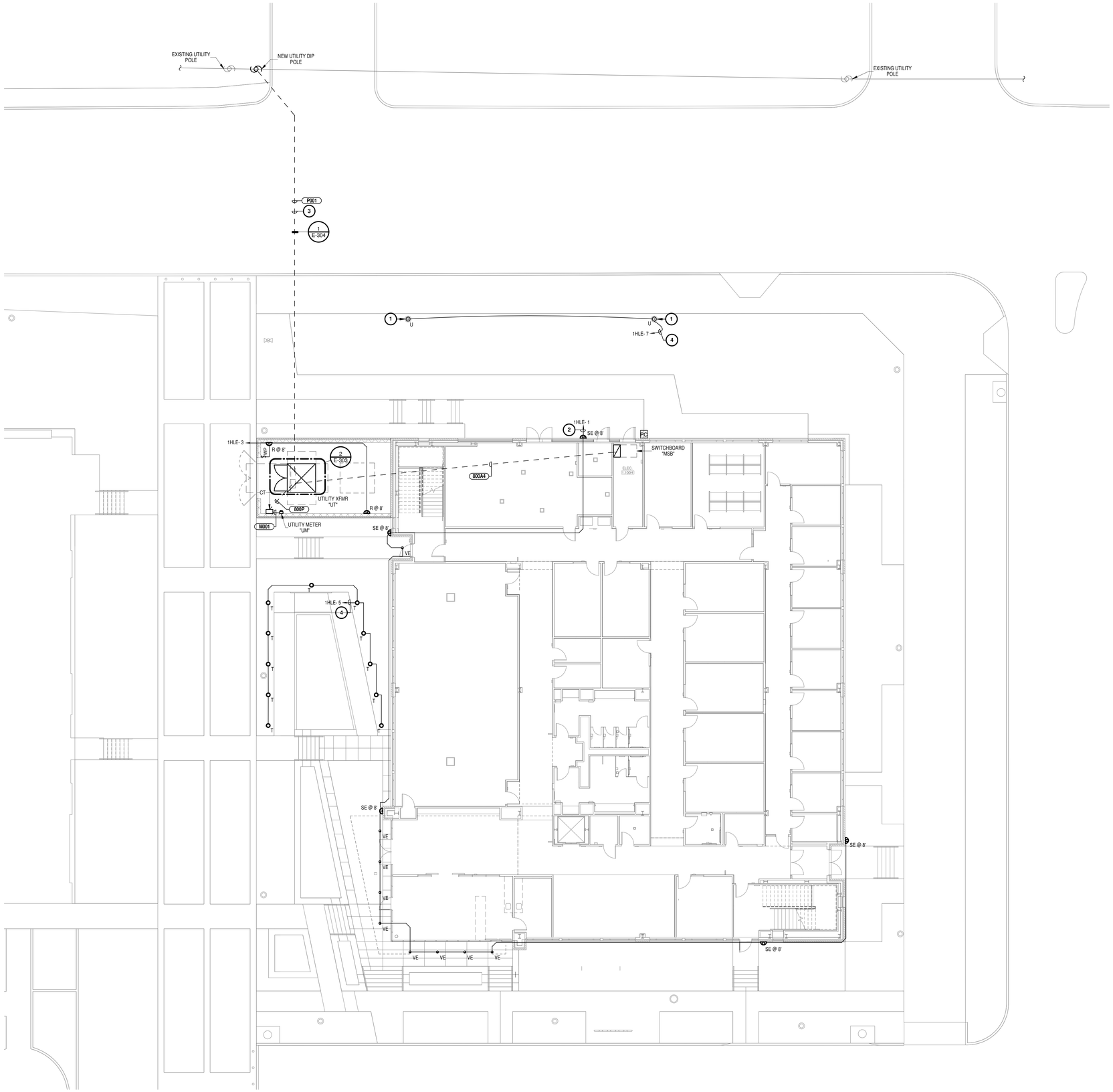

TRUE NORTH
PLAN NORTH

1 ELECTRICAL SITE PLAN
1" = 10'-0"

GENERAL NOTES

A. REFER TO SHEET E-001 FOR GENERAL NOTES.

KEY NOTES

1. LIGHT FIXTURES ARE PART OF ALTERNATE #10, BASE IS ROUGH-IN ONLY.
2. CIRCUIT 1HLE-1 TO SINGLE POLE CONTACT IN TIME CLOCK. ALSO GETS CONECTED TO INVERTER.
3. THE CONTRACTOR SHALL BORE UNDER EXISTING ROAD TO ROUTE PRIMARY. PROVIDE PIPE ENCASEMENT PER DETAIL 1/E-304. COORDINATE WITH CIVIL PLANS, NEW SEWER LINE IN VACINITY.
4. LIGHTING TO BE CONTROLLED BY TIMECLOCK AND PROGRAMED TO SWITCH OFF AT 12 MIDNIGHT OR WITHIN 1 HOUR OF THE END OF BUSINESS OPERATIONS, WHICHEVER IS LATER, UNTIL 6AM OR BUSINESS OPENING , WHICHEVER IS EARLIER.

muñoz & company
1017 NORTH MAIN SUITE 300
SAN ANTONIO, TEXAS 78212
O. 210.349.1163 F. 210.525.1038
WWW.MUNOZ-CO.COM

HALFF
5000 WEST MILITARY, SUITE 100
McALLEN, TEXAS 78503
TEL (956) 664-0286
FAX (956) 664-0282
Halff Associates firm registration number is F-312

STATE OF TEXAS
THOMAS E. DEARMIN
54352
REGISTERED PROFESSIONAL ENGINEER
11-8-18

UTRGV
The University of Texas Rio Grande Valley

UNIVERSITY OF TEXAS RIO GRANDE VALLEY
SCHOOL OF MEDICINE
TEAM BASED LEARNING CENTER
PROJECT NO: 903-1159
EDINBURG, TX
100% CONSTRUCTION DOCUMENTS

Issue/Revision

#	DESCRIPTION	DATE

Sheet Title
ELECTRICAL SITE PLAN

Date
NOVEMBER 08, 2018

Project Number	Drawn By	Checked By
33828	G.C.	T.D.

Sheet Number
E-101

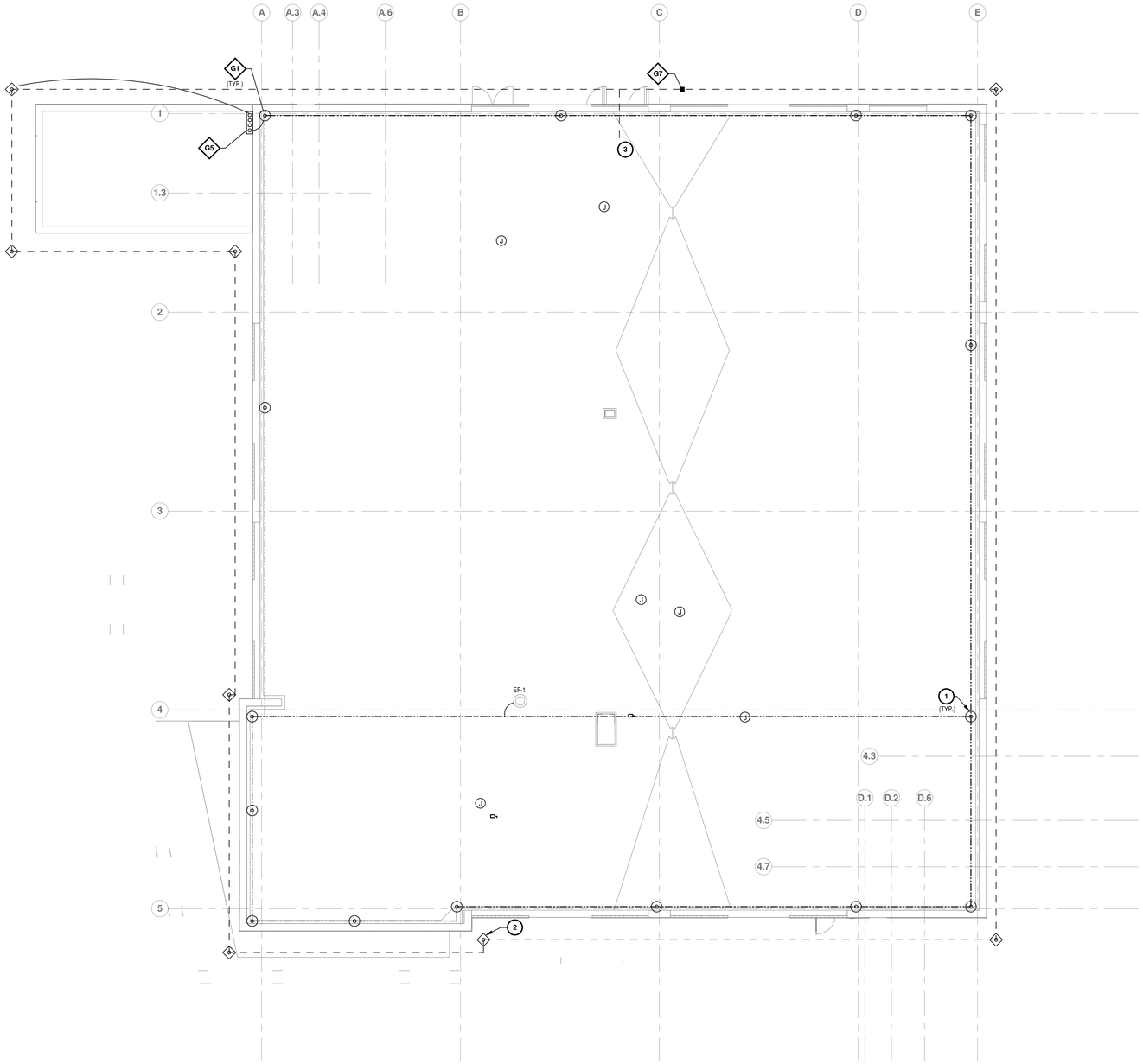

TRUE NORTH
PLAN NORTH

1 ELECTRICAL LIGHTNING PROTECTION PLAN
1/8" = 1'-0"

LEGEND:

- LIGHTNING BARE CONDUCTOR
- #2/0 GROUNDING RING CONDUCTOR
- LIGHTNING PROTECTION - AIR TERMINAL ASSEMBLY
- GROUND ROD
- EQUIPMENT GROUNDING POINT
- GROUND LOOP THERMOWELD FOR GROUND CONDUCTOR TAP
- GROUND BUS
- # INDICATES GROUNDING DETAIL. REFER TO SHEETS E-302 $ E-303

GENERAL NOTES

A. LIGHTNING PROTECTION AND GROUDING LOOP IS SHOWN FOR ESTIMATING PURPOSES ONLY, CONTRACTOR SHALL PROVIDE IN BID TO OWNER ALL COST OF MATERIAL AND LABOR FOR A COMPLETE AND FUCTIONAL LIGHTNING PROTECTION AND GROUND LOOP SYSTEM BY AN LPI (LIGHTNING PROTECTION INSTITUTE) INSTALLER. REFER TO SPECIFICATION SECTION 26 41 00 FOR ADDITIONAL REQUIREMENTS.

KEY NOTES

1. BOND LIGHTNING AIR TERMINAL TO STRUCTURE COLUMN VIA CADWELD.
2. ROUTE GROUND CONDUCTOR FROM AIR TERMINAL TO GROUND BUT WITHIN CMU WALL.
3. TIE GROUND LOOP TO MAIN GROUND BAR AND "MSB" LOCATION AT MAIN ELECTRICAL ROOM. REFER TO SHEET E-203 FOR "MBGB" LOCATION.

muñoz & company
1017 NORTH MAIN SUITE 300
SAN ANTONIO, TEXAS 78212
O. 210.349.1163 F. 210.525.1038
WWW.MUNOZ-CO.COM

HALFF
5000 WEST MILITARY, SUITE 100
McALLEN, TEXAS 78503
TEL (956) 664-0286
FAX (956) 664-0282
Halff Associates firm registration number is F-312

STATE OF TEXAS
THOMAS E. DEARMIN
54352
REGISTERED PROFESSIONAL ENGINEER
11-8-18

UTRGV
The University of Texas Rio Grande Valley

UNIVERSITY OF TEXAS RIO GRANDE VALLEY
SCHOOL OF MEDICINE
TEAM BASED LEARNING CENTER
PROJECT NO: 903-1159
EDINBURG, TX
100% CONSTRUCTION DOCUMENTS

Issue/Revision

#	DESCRIPTION	DATE

Sheet Title
ELECTRICAL LIGHTNING PROTECTION SITE PLAN

Date
NOVEMBER 08, 2018

Project Number	Drawn By	Checked By
33828	G.C.	T.D.

Sheet Number
E-102

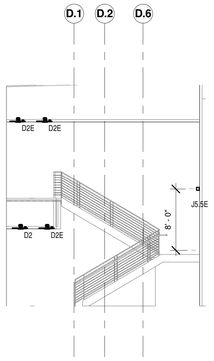

4 ELECTRICAL LIGHTING SECTION - SOUTH EAST STAIRWELL
1/8" = 1'-0"

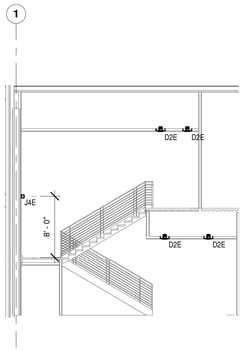

3 ELECTRICAL LIGHTING SECTION - NORTH WEST STAIRWELL
1/8" = 1'-0"

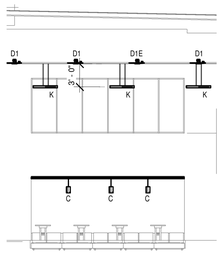

2 ELECTRICAL LIGHTING SECTION - LOBBY
1/8" = 1'-0"

1 ELECTRICAL LIGHTING PLAN LEVEL 1
1/8" = 1'-0"

GENERAL NOTES

A. REFER TO SHEET E-001 FOR GENERAL NOTES.

KEY NOTES

1. LIGHTING FIXTURES WITH "E" IN THE ID WILL BE CIRCUITED THRU INVERTER TO BE POWERED WHEN NORMAL POWER IS LOST. THIS EMERGENCY LIGHT FIXTURE SHOULD TURN 'ON' REGARDLESS OF LIGHTING SWITCH POSITION(ON/OFF).
2. LIGHTING IN STAIRS UNSWITCHED AND WILL STAY ON.

muñoz & company
1017 NORTH MAIN SUITE 300
SAN ANTONIO, TEXAS 78212
O. 210.349.1163 F. 210.525.1038
W W W . M U N O Z - C O . C O M

HALFF
5000 WEST MILITARY, SUITE 100
McALLEN, TEXAS 78503
TEL (956) 664-0286
FAX (956) 664-0282
Halff Associates firm registration number is F-312

STATE OF TEXAS
THOMAS E. DEARMIN
54352
REGISTERED PROFESSIONAL ENGINEER
11-8-18

UTRGV
The University of Texas Rio Grande Valley

UNIVERSITY OF TEXAS RIO GRANDE VALLEY
SCHOOL OF MEDICINE
TEAM BASED LEARNING CENTER

PROJECT NO: 903-1159
EDINBURG, TX
100% CONSTRUCTION DOCUMENTS

Issue/Revision

#	DESCRIPTION	DATE

Sheet Title
ELECTRICAL LIGHTING PLAN LEVEL 1

Date
NOVEMBER 08, 2018

Project Number	Drawn By	Checked By
33828	G.C.	T.D.

Sheet Number
E-201

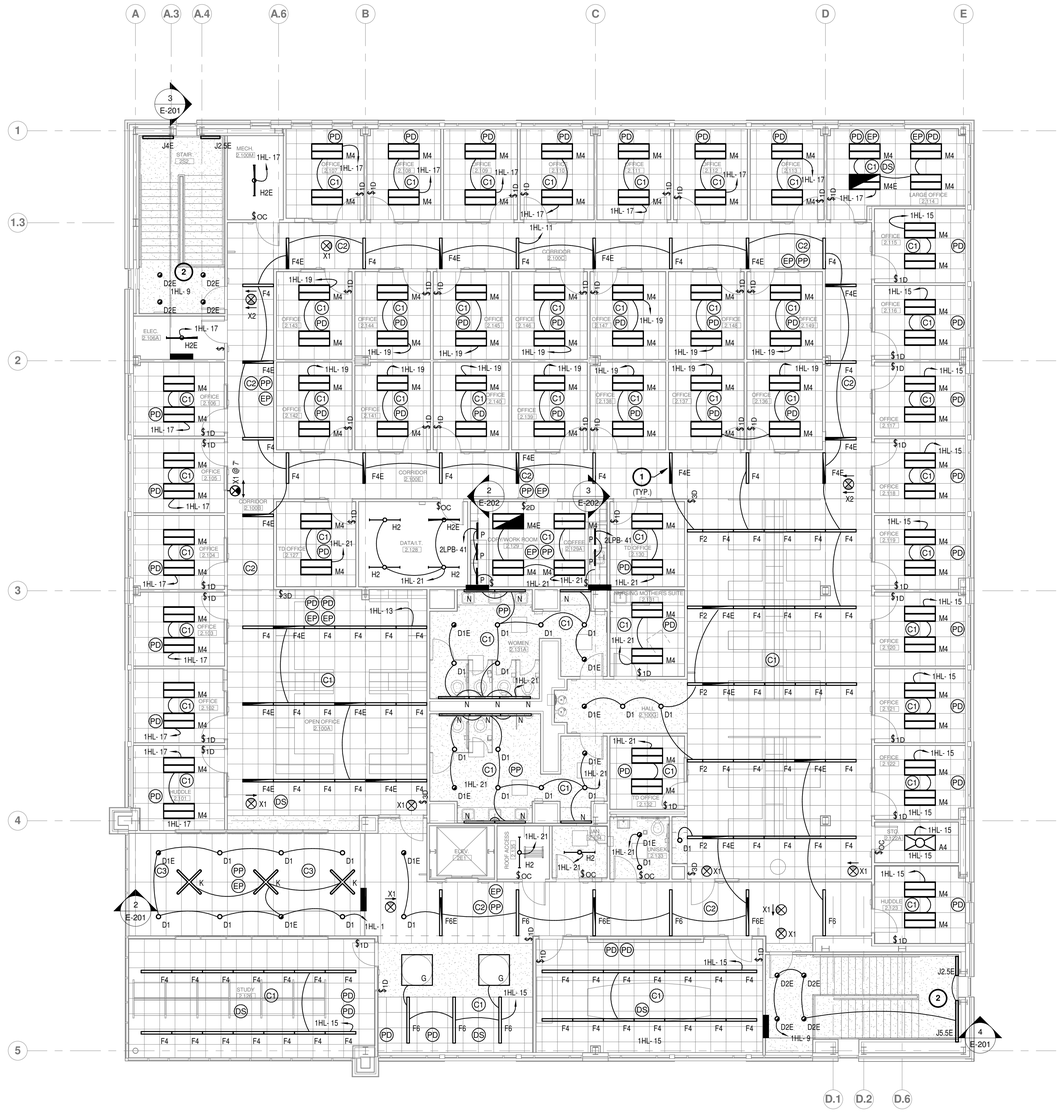

1 ELECTRICAL LIGHTING PLAN LEVEL 2
1/8" = 1'-0"

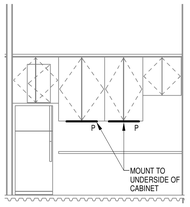

3 ELECTRICAL LIGHTING SECTION - COFFEE
1/4" = 1'-0"

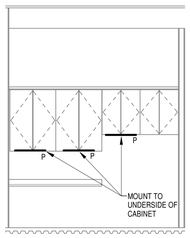

2 ELECTRICAL LIGHTING SECTION - COPY/WORK ROOM
1/4" = 1'-0"

GENERAL NOTES

A. REFER TO SHEET E-001 FOR GENERAL NOTES.

KEY NOTES

1. LIGHTING FIXTURES WITH "E" IN THE ID WILL BE CIRCUITED THRU INVERTER TO BE POWERED WHEN NORMAL POWER IS LOST. THIS EMERGENCY LIGHT FIXTURE SHOULD TURN 'ON' REGARDLESS OF LIGHTING SWITCH POSITION(ON/OFF).
2. LIGHTING IN STAIRS UNSWITCHED AND WILL STAY ON.

muñoz & company
1017 NORTH MAIN SUITE 300
SAN ANTONIO, TEXAS 78212
O. 210.349.1163 F. 210.525.1038
WWW.MUNOZ-CO.COM

HALFF
5000 WEST MILITARY, SUITE 100
McALLEN, TEXAS 78503
TEL (956) 664-0286
FAX (956) 664-0282
Halff Associates firm registration number is F-312

STATE OF TEXAS
THOMAS E. DEARMIN
54352
REGISTERED PROFESSIONAL ENGINEER
11-8-18

UTRGV
The University of Texas Rio Grande Valley

UNIVERSITY OF TEXAS RIO GRANDE VALLEY
SCHOOL OF MEDICINE
TEAM BASED LEARNING CENTER
PROJECT NO: 903-1159
EDINBURG, TX
100% CONSTRUCTION DOCUMENTS

Issue/Revision

#	DESCRIPTION	DATE

Sheet Title
ELECTRICAL LIGHTING PLAN LEVEL 2

Date
NOVEMBER 08, 2018

Project Number	Drawn By	Checked By
33828	G.C.	T.D.

Sheet Number
E-202

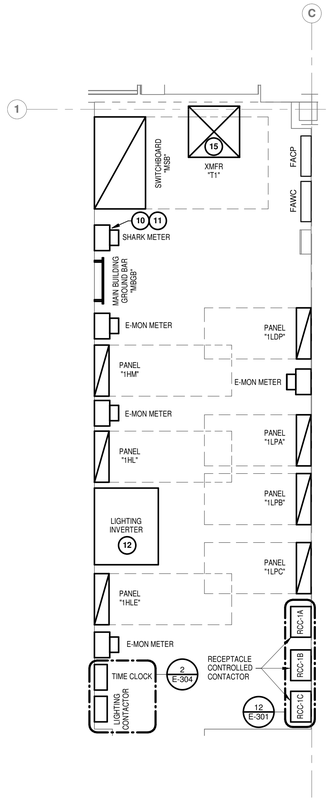

TRUE NORTH
PLAN NORTH

3 ELECTRICAL POWER PLAN LEVEL 1 - ELECTRICAL ROOM
1/2" = 1'-0"

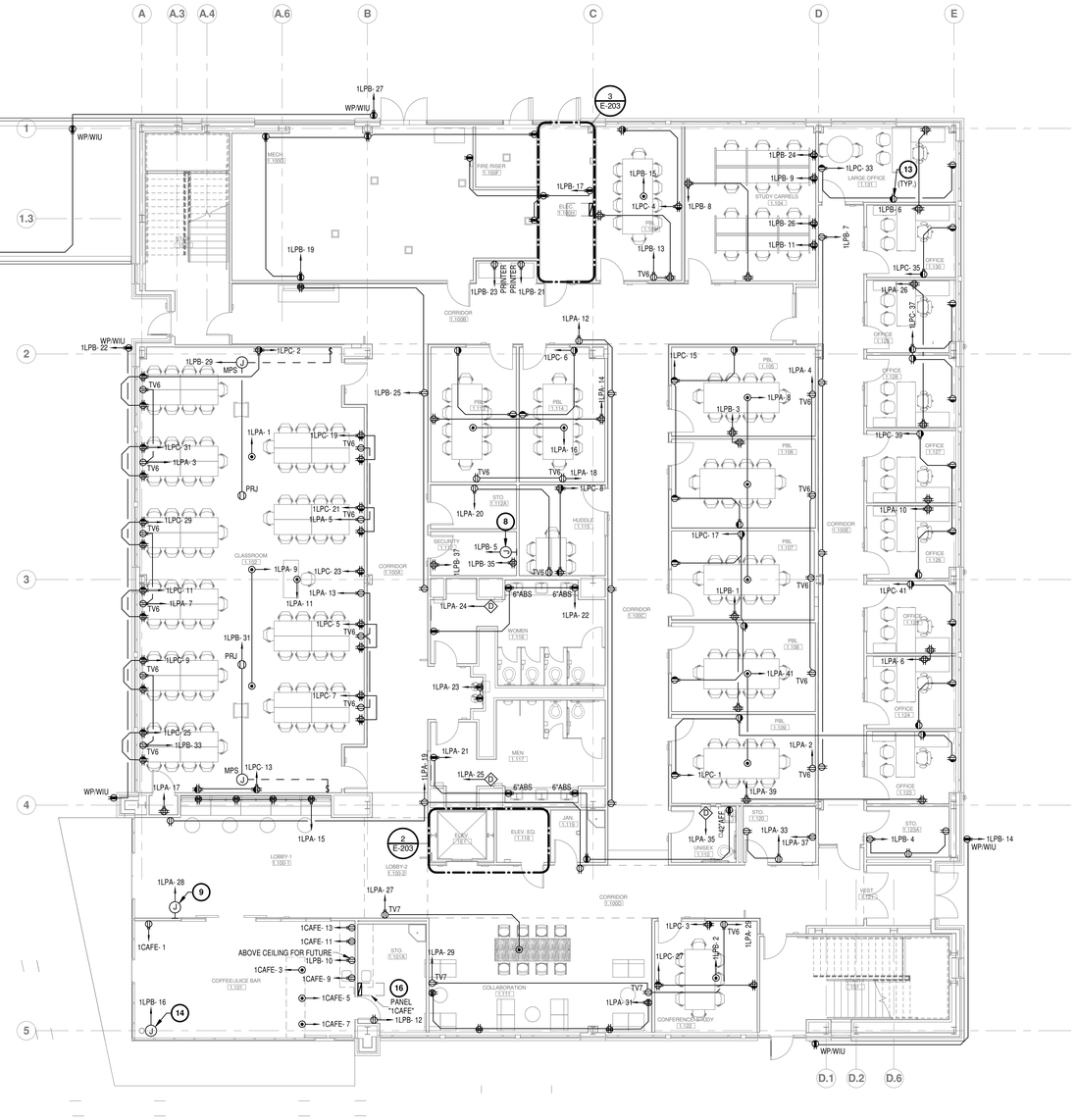

TRUE NORTH
PLAN NORTH

1 ELECTRICAL POWER PLAN LEVEL 1
1/8" = 1'-0"

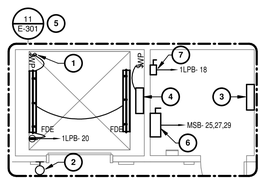

TRUE NORTH
PLAN NORTH

2 ELECTRICAL POWER PLAN LEVEL 1 - ELEVATOR
1/4" = 1'-0"

GENERAL NOTES

A. REFER TO SHEET E-001 FOR GENERAL NOTES.
B. **REFER TO ARCHITECHURAL ELEVATIONS FOR EXACT RECEPTACLE LOCATIONS.**

KEY NOTES (#)

1. HOIST LIGHT SWITCH. LOCATE 3' ABOVE TOP OF LANDING. COORDINATE LOCATION WITH ELEVATOR CONTRACTOR.
2. REMOTE INDICATOR LIGHT. CIRCUIT TO CENTIPRO ENVIRONMENT PROTECTION PANEL. REFER TO ELEVATOR DETAIL.
3. ELEVATOR CONTROLLER. REFER TO ELEVATOR DETAIL.
4. NEW CENTIPRO ENVIRONMENT PROTECTION PANEL BY PLUMBING. WIRING BY DIVISION 26. REFER TO ELEVATOR DETAIL.
5. REFER TO ELEVATOR DETAIL.
6. PROVIDE BUSSMANN POWER MODULE SWITCH CAT #PS4T20R2KGA OR EQUAL. 3#3,#8G,1-1/4"C.
7. PROVIDE FUSED DISCONNECT SWITCH CAPABLE OF BEING LOCKED IN OPEN POSITION. SWITCH IS FOR 120VOLT CONTROL TO ELEVATOR.
8. POWER FOR ACCESS CONTROL SYSTEM PANEL. REFER TO TECHNOLOGY PLANS T-300.
9. POWER FOR SIGN. VERIFY LOCATION WITH COFFEE BAR OPERATOR.
10. PROVIDE SUB-METER, ASSOCIATED CT'S AND REQUIRED ASSESSORIES. SUB-METER SHALL BE: ELECTRO INDUSTRIES #SHARK 100-60-10-V3-D2-INP10.
11. THE CONTRACTOR SHALL CONTACT DAVID ORTEGA, AT UTRGV, PRIOR TO INSTALLING SUB-METER. PHONE #956-665-2747.
12. LIGHTING INVERTOR. MYERS #6-EI-4-3-S-R120-BC2015. ALL FIXTURE WITH "E" IN ID WILL BE CONNECTED TO INVERTER.
13. CONNECT CONTROLLED RECEPTACLES TO RECEPTACLE CONTROL CONTACTOR FOR AUTOMATIC CONTROL OF PLUG LOADS.
14. J-BOX FOR SURFACE RACEWAY.
15. SUSPEND TRANSFORMER ABOVE DOOR.
16. GENERAL CONTRACTOR TO COORDINATE FINAL LOCATION OF ELECTRICAL PANEL, SWITCHES , RECEPTACLES AND OTHER DEVICES WITH OWNER AND OWNER'S FOOD SERVICE OPERATOR.

muñoz & company
1017 NORTH MAIN SUITE 300
SAN ANTONIO, TEXAS 78212
O. 210.349.1163 F. 210.525.1038
W W W . M U N O Z - C O . C O M

HALFF
5000 WEST MILITARY, SUITE 100
McALLEN, TEXAS 78503
TEL (956) 664-0286
FAX (956) 664-0282
Halff Associates firm registration number is F-312

STATE OF TEXAS
THOMAS E. DEARMIN
54352
REGISTERED PROFESSIONAL ENGINEER
11-8-18

UTRGV
The University of Texas Rio Grande Valley

UNIVERSITY OF TEXAS RIO GRANDE VALLEY
SCHOOL OF MEDICINE
TEAM BASED LEARNING CENTER

PROJECT NO: 903-1159
EDINBURG, TX
100% CONSTRUCTION DOCUMENTS

Issue/Revision

#	DESCRIPTION	DATE

Sheet Title
ELECTRICAL POWER PLAN LEVEL 1

Date
NOVEMBER 08, 2018

Project Number	Drawn By	Checked By
33828	G.C.	T.D.

Sheet Number
E-203

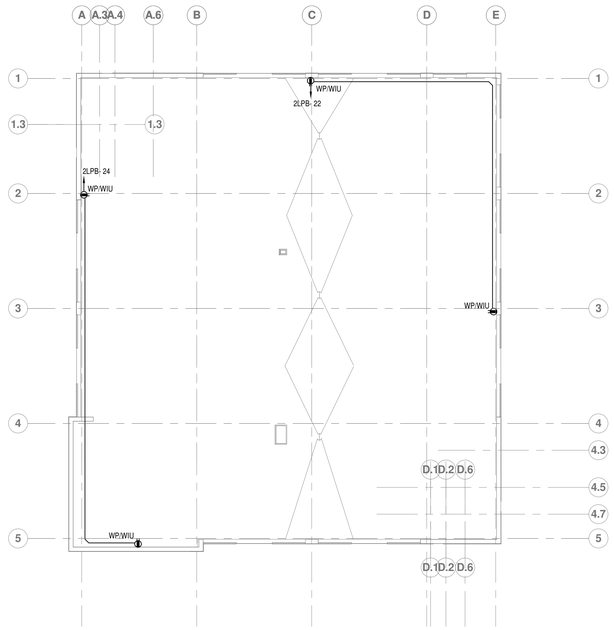

TRUE NORTH
PLAN NORTH

2 ELECTRICAL POWER PLAN ROOF
1/16" = 1'-0"

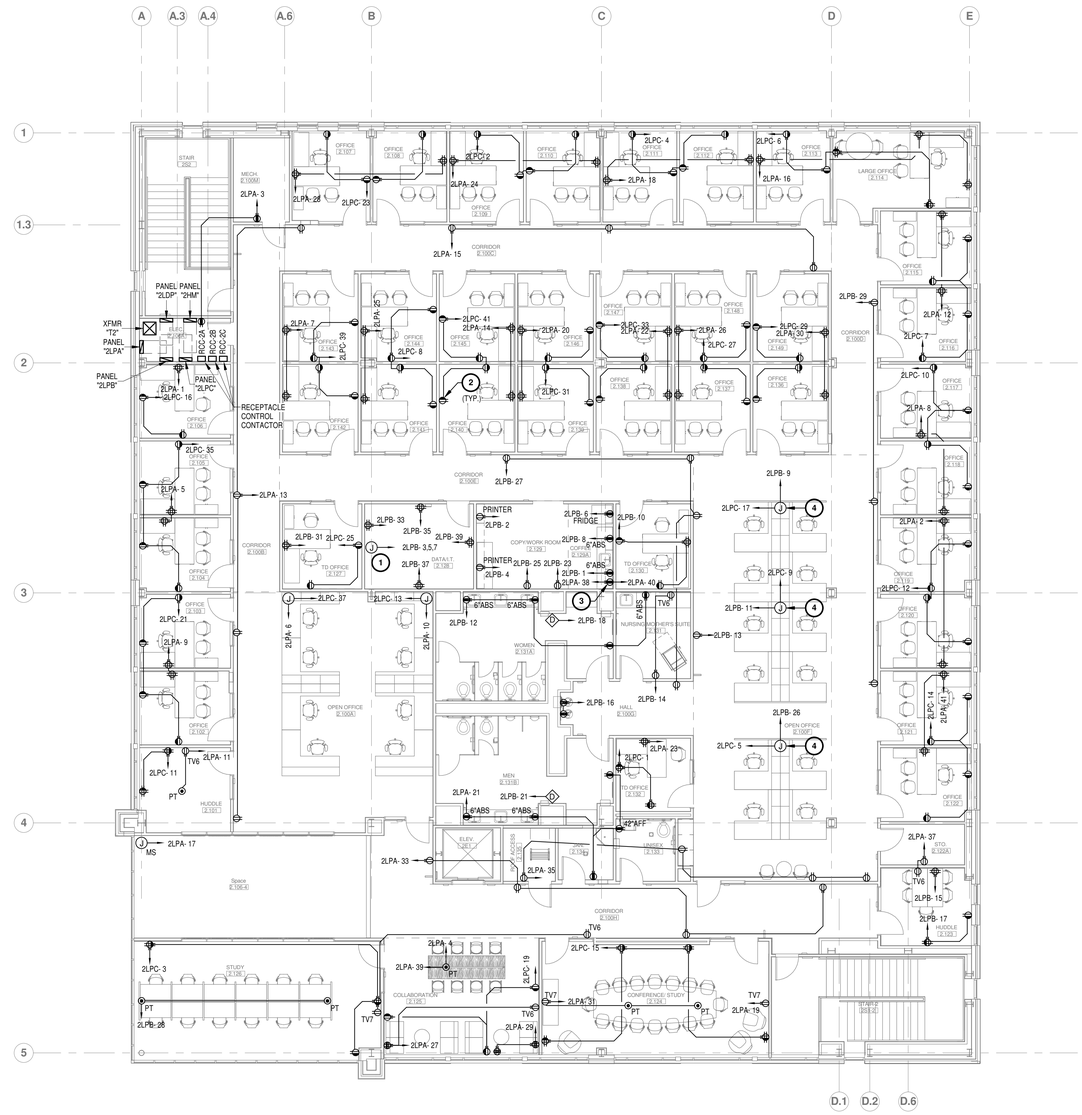

TRUE NORTH
PLAN NORTH

1 ELECTRICAL POWER PLAN LEVEL 2
1/8" = 1'-0"

GENERAL NOTES

A. REFER TO SHEET E-001 FOR GENERAL NOTES.
B. **REFER TO ARCHITECHURAL ELEVATIONS FOR EXACT RECEPTACLE LOCATIONS.**

KEY NOTES (#)

1. POWER FOR STARLINE BUS.
2. CONNECT CONTROLLED RECEPTACLES TO RECEPTACLE CONTROL CONTACTOR FOR AUTOMATIC CONTROL OF PLUG LOADS.
3. RECEPTACLES FOR MICROWAVES, REFER TO ARCHITECTURAL ELEVATIONS FOR MOUNTING HEIGHTS.
4. POWER FOR FUNITURE.

muñoz & company
1017 NORTH MAIN SUITE 300
SAN ANTONIO, TEXAS 78212
O. 210.349.1163 F. 210.525.1038
W W W . M U N O Z - C O . C O M

HALFF
5000 WEST MILITARY, SUITE 100
McALLEN, TEXAS 78503
TEL (956) 664-0286
FAX (956) 664-0282
Halff Associates firm registration number is F-312

STATE OF TEXAS
THOMAS E. DEARMIN
54352
REGISTERED
PROFESSIONAL ENGINEER
11-8-18

UTRGV
The University of Texas Rio Grande Valley

UNIVERSITY OF TEXAS RIO GRANDE VALLEY
SCHOOL OF MEDICINE
TEAM BASED LEARNING CENTER

PROJECT NO: 903-1159
EDINBURG, TX
100% CONSTRUCTION DOCUMENTS

Issue/Revision

#	DESCRIPTION	DATE

Sheet Title
ELECTRICAL POWER PLAN LEVEL 2 & ROOF

Date
NOVEMBER 08, 2018

Project Number	Drawn By	Checked By
33828	G.C.	T.D.

Sheet Number
E-204

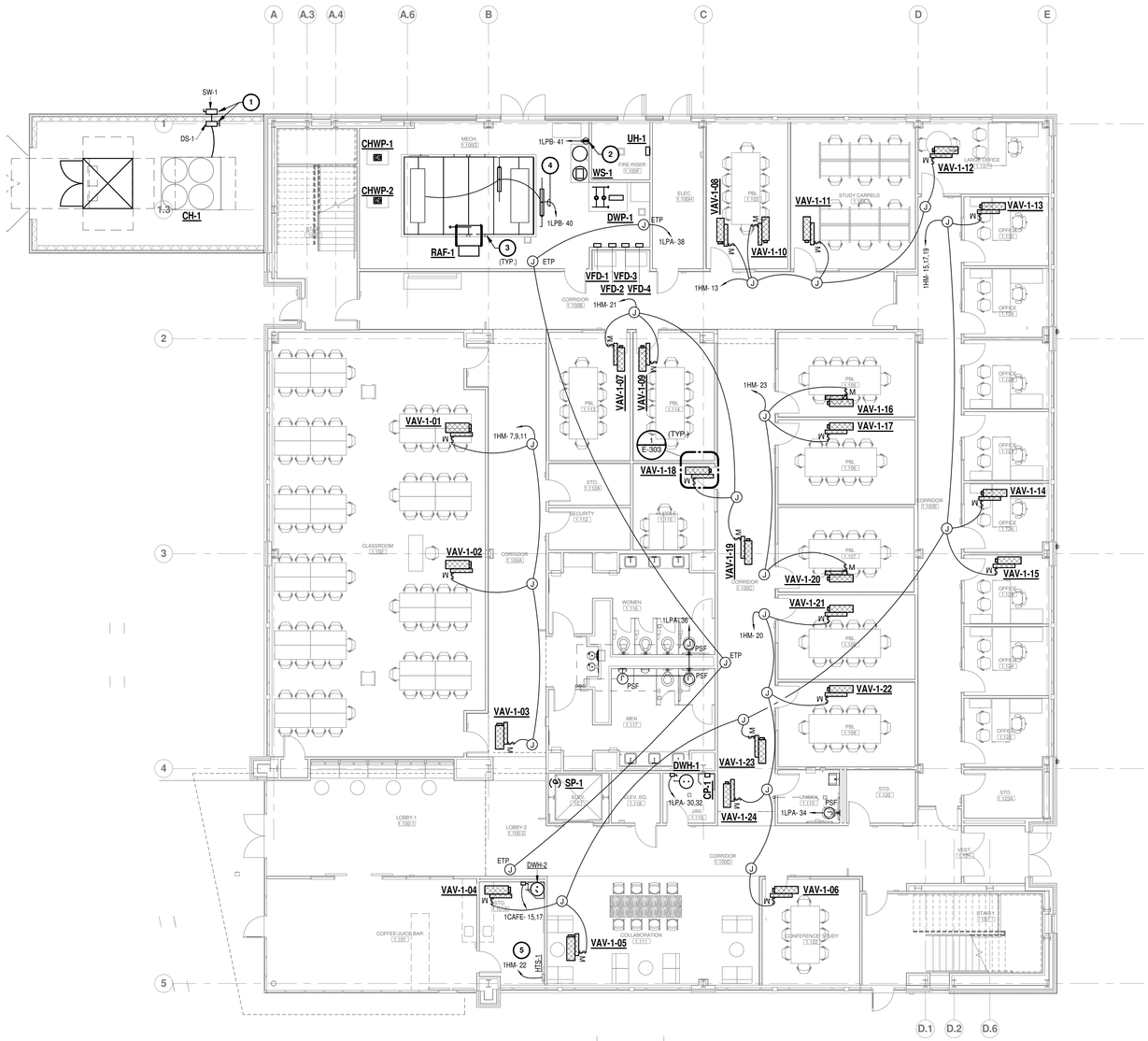

1 MECHANICAL & PLUMBING EQUIPMENT POWER PLAN LEVEL 1

1/8" = 1'-0"

GENERAL NOTES

A. REFER TO SHEET E-001 FOR GENERAL NOTES.

KEY NOTES (#)

1. REFER TO ELECTRICAL ONE-LINE DIAGRAM KEYNOTES 1 & 2 ON SHEET E-401.
2. OUTLET FOR WATER SOFTENER "WS-1".
3. FOR ALL MECHANICAL EQUIPMENT REFER TO SHEET E-402 FOR SCHEDULES.
4. POWER FOR SMOKE DAMPERS.
5. POWER FOR HEAT TRACE.

muñoz & company
1017 NORTH MAIN SUITE 300
SAN ANTONIO, TEXAS 78212
O. 210.349.1163 F. 210.525.1038
W W W . M U N O Z - C O . C O M

HALFF
5000 WEST MILITARY, SUITE 100
McALLEN, TEXAS 78503
TEL (956) 664-0286
FAX (956) 664-0282
Halff Associates firm registration number is F-312

STATE OF TEXAS
THOMAS E. DEARMIN
54352
REGISTERED PROFESSIONAL ENGINEER
11-8-18

UTRGV
The University of Texas Rio Grande Valley

UNIVERSITY OF TEXAS RIO GRANDE VALLEY
SCHOOL OF MEDICINE
TEAM BASED LEARNING CENTER
PROJECT NO: 903-1159
EDINBURG, TX
100% CONSTRUCTION DOCUMENTS

Issue/Revision

#	DESCRIPTION	DATE

Sheet Title
MECHANICAL & PLUMBING EQUIPMENT POWER PLAN LEVEL 1

Date
NOVEMBER 08, 2018

Project Number	Drawn By	Checked By
33828	Author	Checker

Sheet Number
E-205

TRUE NORTH
PLAN NORTH

1 MECHANICAL & PLUMBING EQUIPMENT POWER PLAN LEVEL 2
1/8" = 1'-0"

GENERAL NOTES

A. REFER TO SHEET E-001 FOR GENERAL NOTES.

KEY NOTES

1. FOR ALL MECHANICAL EQUIPMENT REFER TO SHEET E-402 FOR SCHEDULES.

muñoz & company
1017 NORTH MAIN SUITE 300
SAN ANTONIO, TEXAS 78212
O. 210.349.1163 F. 210.525.1038
WWW.MUNOZ-CO.COM

HALFF
5000 WEST MILITARY, SUITE 100
McALLEN, TEXAS 78503
TEL (956) 664-0286
FAX (956) 664-0282
Halff Associates firm registration number is F-312

STATE OF TEXAS
THOMAS E. DEARMIN
54352
REGISTERED PROFESSIONAL ENGINEER
11-8-18

UTRGV
The University of Texas Rio Grande Valley

UNIVERSITY OF TEXAS RIO GRANDE VALLEY
SCHOOL OF MEDICINE
TEAM BASED LEARNING CENTER
PROJECT NO: 903-1159
EDINBURG, TX
100% CONSTRUCTION DOCUMENTS

Issue/Revision

#	DESCRIPTION	DATE

Sheet Title
MECHANICAL & PLUMBING EQUIPMENT POWER PLAN LEVEL 2

Date
NOVEMBER 08, 2018

Project Number	Drawn By	Checked By
33828	G.C.	T.D.

Sheet Number
E-206

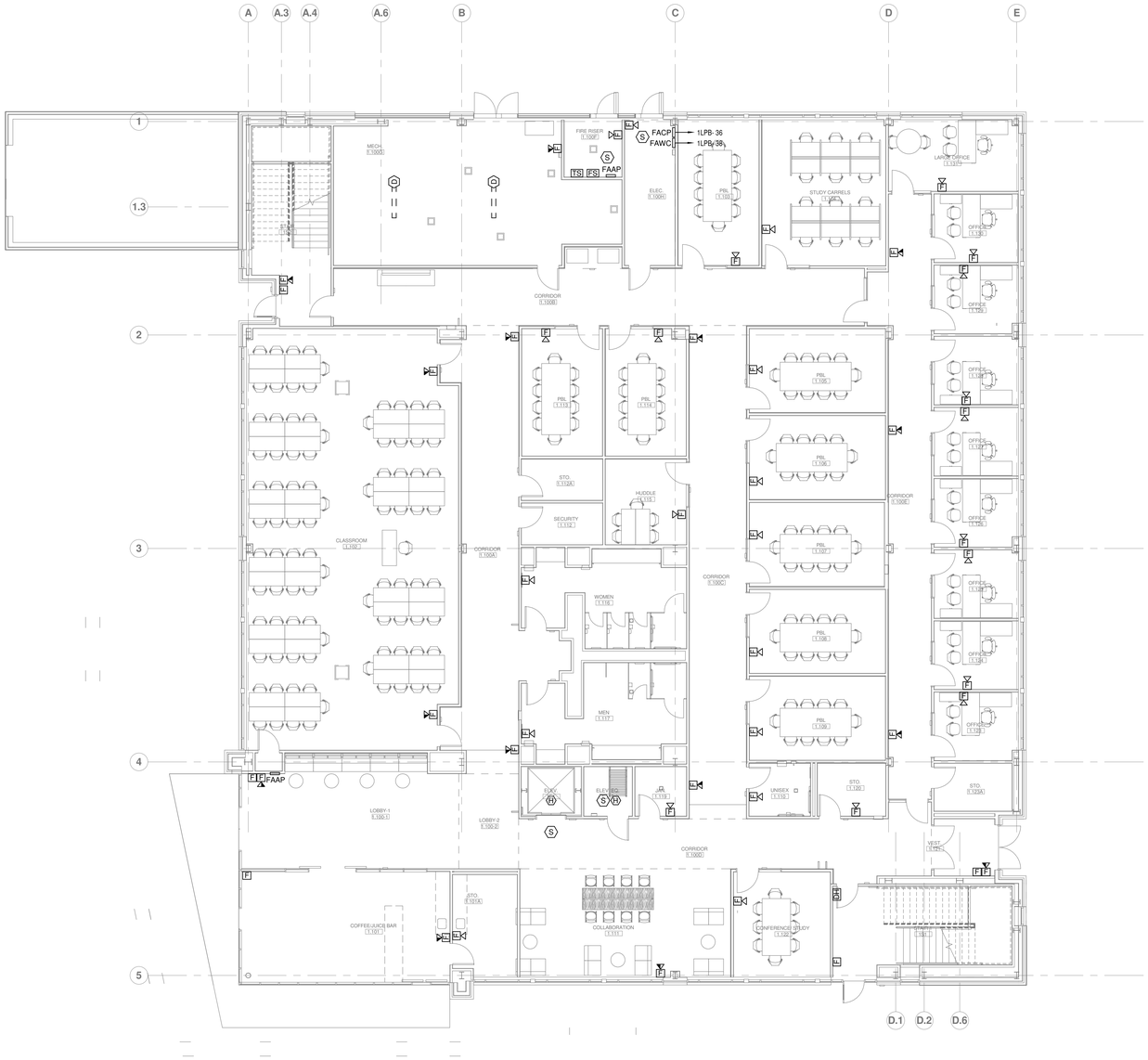

TRUE NORTH
PLAN NORTH

1 FIRE ALARM PLAN LEVEL 1
1/8" = 1'-0"

GENERAL NOTES

A. REFER TO SHEET E-001 FOR GENERAL NOTES.

KEY NOTES

muñoz & company
1017 NORTH MAIN SUITE 300
SAN ANTONIO, TEXAS 78212
O. 210.349.1163 F. 210.525.1038
WWW.MUNOZ-CO.COM

HALFF
5000 WEST MILITARY, SUITE 100
McALLEN, TEXAS 78503
TEL (956) 664-0286
FAX (956) 664-0282
Halff Associates firm registration number is F-312

STATE OF TEXAS
THOMAS E. DEARMIN
54352
REGISTERED
PROFESSIONAL ENGINEER
11-8-18

UTRGV
The University of Texas Rio Grande Valley

UNIVERSITY OF TEXAS RIO GRANDE VALLEY
SCHOOL OF MEDICINE
TEAM BASED LEARNING CENTER
PROJECT NO: 903-1159
EDINBURG, TX
100% CONSTRUCTION DOCUMENTS

Issue/Revision

#	DESCRIPTION	DATE

Sheet Title
FIRE ALARM PLAN LEVEL 1

Date
NOVEMBER 08, 2018

Project Number	Drawn By	Checked By
33828	G.C.	T.D.

Sheet Number
E-207

TRUE NORTH
PLAN NORTH

1 FIRE ALARM PLAN LEVEL 2
1/8" = 1'-0"

GENERAL NOTES

A. REFER TO SHEET E-001 FOR GENERAL NOTES.

KEY NOTES

muñoz & company
1017 NORTH MAIN SUITE 300
SAN ANTONIO, TEXAS 78212
O. 210.349.1163 F. 210.525.1038
W W W . M U N O Z - C O . C O M

HALFF
5000 WEST MILITARY, SUITE 100
McALLEN, TEXAS 78503
TEL (956) 664-0286
FAX (956) 664-0282
Halff Associates firm registration number is F-312

STATE OF TEXAS
THOMAS E. DEARMIN
54352
REGISTERED
PROFESSIONAL ENGINEER
11-8-18

UTRGV
The University of Texas Rio Grande Valley

UNIVERSITY OF TEXAS RIO GRANDE VALLEY
SCHOOL OF MEDICINE
TEAM BASED LEARNING CENTER
PROJECT NO: 903-1159
EDINBURG, TX
100% CONSTRUCTION DOCUMENTS

Issue/Revision

#	DESCRIPTION	DATE

Sheet Title
FIRE ALARM PLAN LEVEL 2

Date
NOVEMBER 08, 2018

Project Number	Drawn By	Checked By
33828	G.C.	T.D.

Sheet Number
E-208

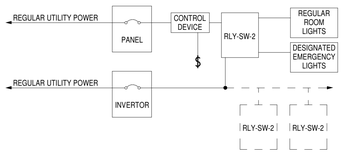

12 RLY-SW-2 WIRING DETAIL
N.T.S.

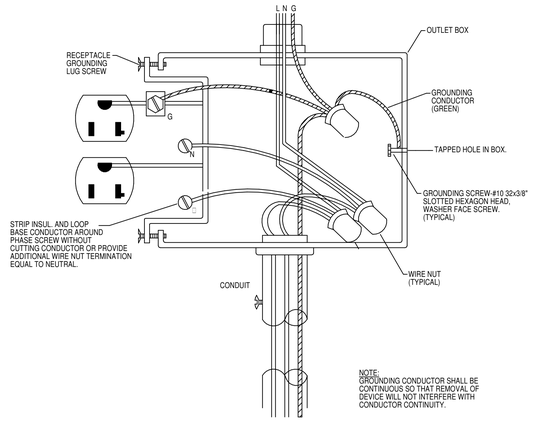

9 TYPICAL RECEPTACLE GROUNDING DETAIL
N.T.S.

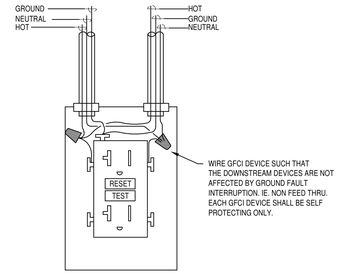

6 GFCI RECEPTACLE - WIRING DIAGRAM
N.T.S.

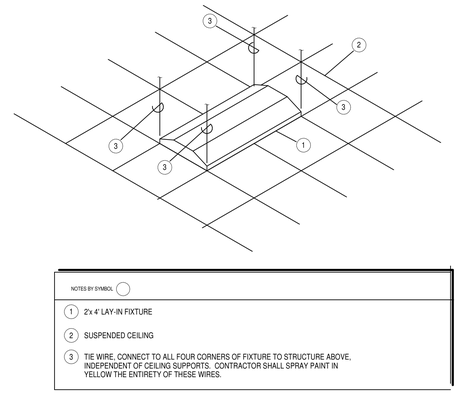

3 TYPICAL LAY-IN FIXTURE SUPPORT
N.T.S.

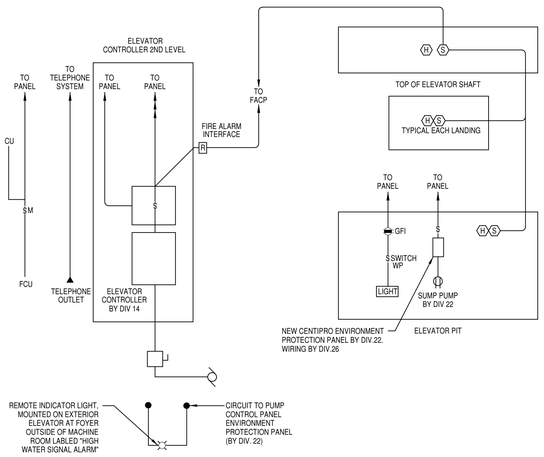

11 ELEVATOR AND PIT HIGH WATER ALARM ELECTRICAL SCHEMATIC
N.T.S.

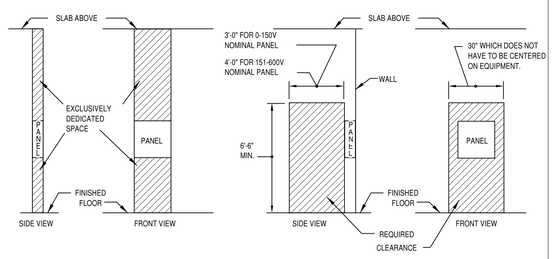

8 TYPICAL PANELBOARD REQUIRED CLEARANCE
N.T.S.

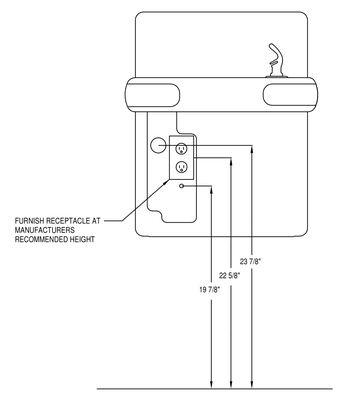

5 ELECTRIC WATER COOLER RECEPTACLE DETAIL
N.T.S.

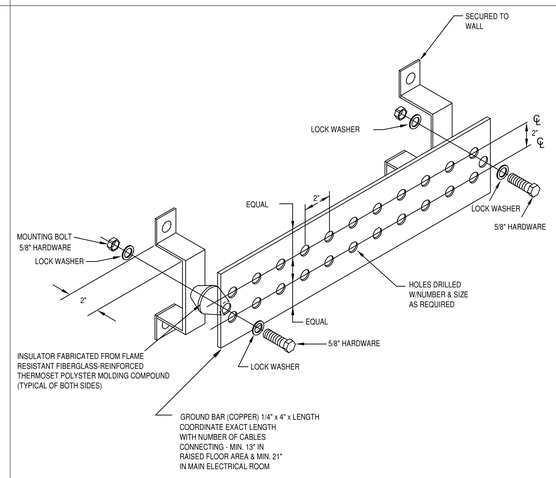

2 WALL MOUNTED SINGLE-PORT GROUND BAR DETAIL
N.T.S.

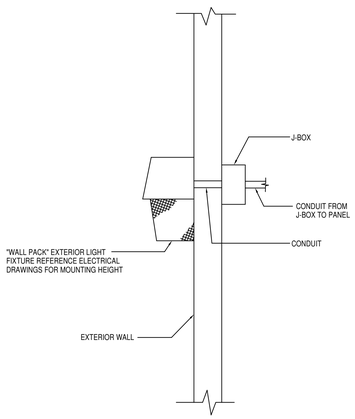

10 WALL PACK MOUNTING DETAIL
N.T.S.

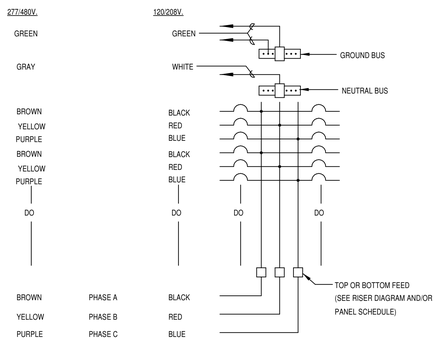

7 TYPICAL PANEL COLOR CODE DETAIL
N.T.S.

GENERAL NOTES:

(A) SWITCH HANDLE SHALL BE ACCESSIBLE FROM SERVICE ACCESS PANEL. MOUNT SWITCH VERTICALLY

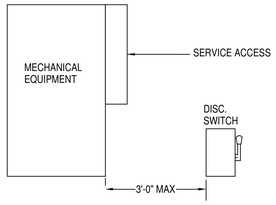

4 MECHANICAL EQUIPMENT DISCONNECTION DETAIL
N.T.S.

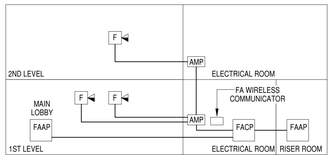

1 FIRE ALARM RISER DIAGRAM
N.T.S.

muñoz & company
1017 NORTH MAIN SUITE 300
SAN ANTONIO, TEXAS 78212
O. 210.349.1163 F. 210.525.1038
W W W . M U N O Z - C O . C O M

HALFF
5000 WEST MILITARY, SUITE 100
McALLEN, TEXAS 78503
TEL (956) 664-0286
FAX (956) 664-0282
Halff Associates firm registration number is F-312

STATE OF TEXAS
THOMAS E. DEARMIN
54352
REGISTERED PROFESSIONAL ENGINEER
11-8-18

UTRGV
The University of Texas Rio Grande Valley

UNIVERSITY OF TEXAS RIO GRANDE VALLEY
SCHOOL OF MEDICINE
TEAM BASED LEARNING CENTER
PROJECT NO: 903-1159
EDINBURG, TX
100% CONSTRUCTION DOCUMENTS

Issue/Revision

#	DESCRIPTION	DATE

Sheet Title
ELECTRICAL DETAILS I

Date
NOVEMBER 08, 2018

Project Number	Drawn By	Checked By
33828	G.C.	T.D.

Sheet Number
E-301

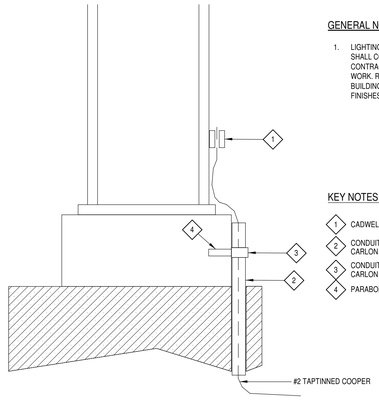

GENERAL NOTES

1. LIGHTING PROTECTION CONTRACTOR SHALL COORDINATE WITH FINISH OUT CONTRACTOR PRIOR TO COMMENCING WORK. ROUGH-IN GROUNDING TO BUILDING STRUCTURE PRIOR TO WALL FINISHES ARE INSTALLED.

KEY NOTES:

1. CADWELD
2. CONDUIT, RIGID PVC, SCHEDULE 80 CARLON 3/4".
3. CONDUIT, RIGID PVC, SCHEDULE 80 CARLON 3/4".
4. PARABOND CAPSULE ANCHORS.

TYPICAL STRUCTURE STEEL GROUNDING - G12

10 N.T.S.

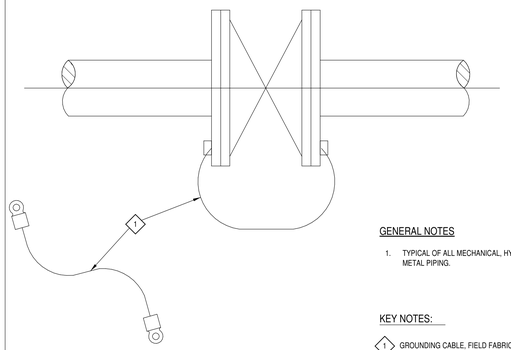

GENERAL NOTES

1. TYPICAL OF ALL MECHANICAL, HYDRONIC METAL PIPING.

KEY NOTES:

1. GROUNDING CABLE, FIELD FABRICATE.

TYPICAL PIPING BONDING JUMPER CABLE - G10

8 N.T.S.

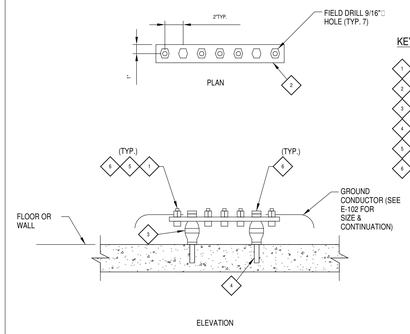

KEY NOTES:

1. CONNECTOR, SERVIT POST, 1#2 THRU 2/0, 1/2"-13 STUD.
2. BAR, COPPER, 1/4" X 2" X 1'-2".
3. STANDOFF INSULATOR W/TWO 1/2"-13 X 2 3/4".
4. EXPANSION ANCHOR, 1/2"-13 X 2 3/4".
5. NUT, HEX, 1/2"-13, SILICON BRONZE.
6. LOCKWASHER, 1/2", SILICON BRONZE.

TYPICAL GROUNDING BUS - G5

3 N.T.S.

KEY NOTES:

1. CABLE LUG "BURNDY" YA26-2LN HYLUG OR EQUAL.
2. CABLE LUG "BURNDY" YA28-2LN HYLUG OR EQUAL.

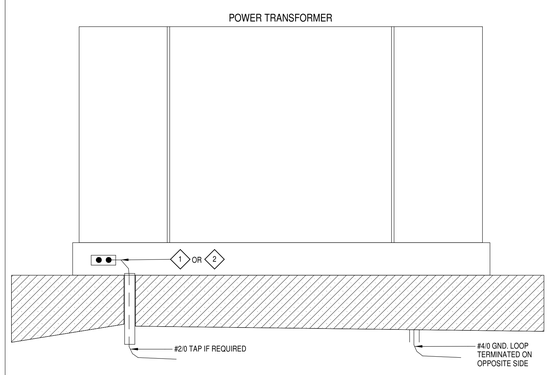

TYPICAL TRANSFORMER GROUNDING - G13

11 N.T.S.

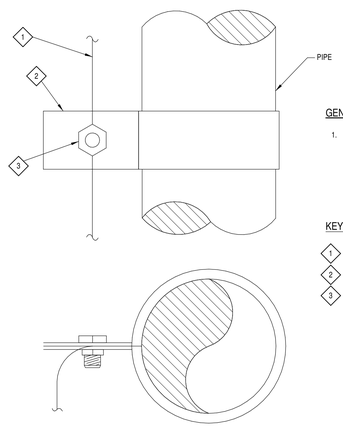

GENERAL NOTES

1. TYPICAL OF ALL MECHANICAL, HYDRONIC METAL PIPING.

KEY NOTES:

1. BARE STRANDED COPPER (SIZE AS REQUIRED)
2. 1/4 " X 1" STAINLESS STEEL STRAPPING CLAMP FIELD FABRICATE.
3. BURNDY "KC" "GROUNDING LUG"

TYPICAL PIPING GROUNDING - G11

9 N.T.S.

KEY NOTES:

1. THERMOWELD, TYPE CC-2 THERMOMOLD M-235 (#2/0 LOOP-#2 TAP)

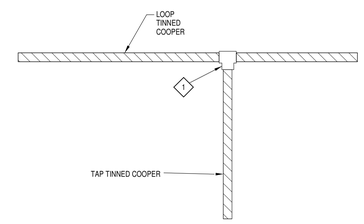

TYPICAL GROUNDING ROD LOOP THERMOWELD - G7

5 N.T.S.

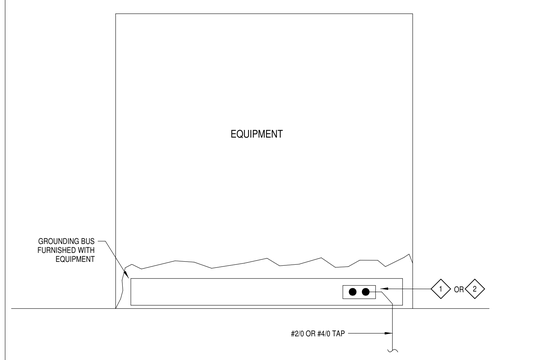

KEY NOTES:

1. CABLE LUG "BURNDY" YA26-2LN HYLUG OR EQUAL
2. CABLE LUG "BURNDY" YA28-2LN HYLUG OR EQUAL

TYPICAL EQUIPMENT GROUNDING - G4

2 N.T.S.

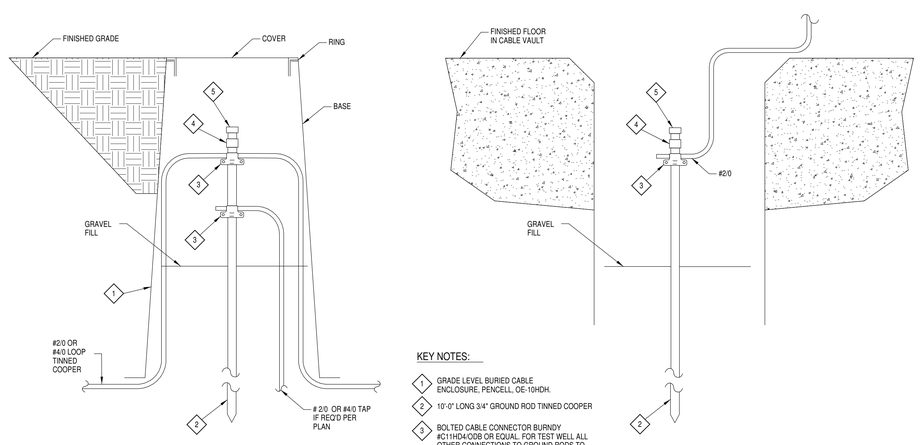

KEY NOTES:

1. GRADE LEVEL BURIED CABLE ENCLOSURE, PENCELL, OE-10HDH.
2. 10'-0" LONG 3/4" GROUND ROD TINNED COOPER
3. BOLTED CABLE CONNECTOR BURNDY #C11HD4/ODB OR EQUAL. FOR TEST WELL ALL OTHER CONNECTIONS TO GROUND RODS TO BE EXOTHERMIC WELDED.
4. 3/4" COUPLING.
5. DRIVING STUD.

TYPICAL GROUNDING ROD ENCLOSURE - G8

7 N.T.S.

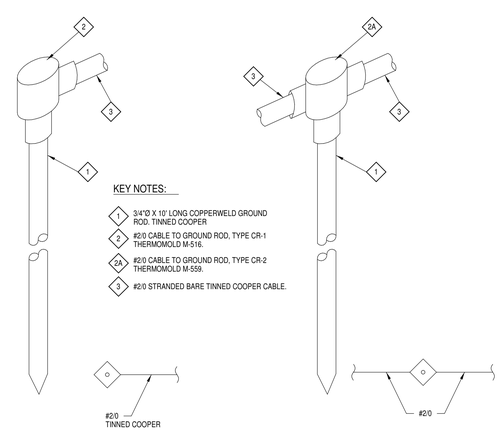

KEY NOTES:

1. 3/4"Ø X 10' LONG COPPERWELD GROUND ROD. TINNED COOPER
2. #2/0 CABLE TO GROUND ROD, TYPE CR-1 THERMOMOLD M-516.
2A. #2/0 CABLE TO GROUND ROD, TYPE CR-2 THERMOMOLD M-559.
3. #2/0 STRANDED BARE TINNED COOPER CABLE.

TYPICAL GROUNDING ROD - G6

4 N.T.S.

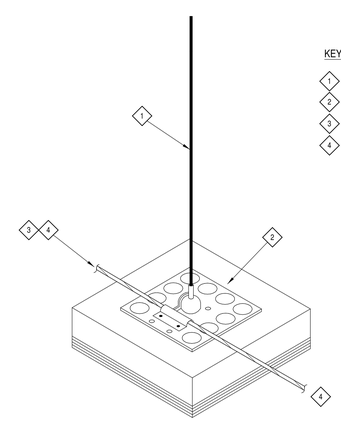

KEY NOTES:

1. AIR TERMINAL 3/8" DIA. 24" LONG, SOLID CU. ROD LEAD DIPPED (STANDARD POINT)
2. AIR TERMINAL MOUNTING BASE.
3. #6 BARE STRANDED COPPER WIRE
4. CONTINUES TO NEXT AIR TEMINAL

TYPICAL AIR TERMINAL MOUNTING DETAIL - G1

1 N.T.S.

muñoz & company
1017 NORTH MAIN SUITE 300
SAN ANTONIO, TEXAS 78212
O. 210.349.1163 F. 210.525.1038
WWW.MUNOZ-CO.COM

HALFF
5000 WEST MILITARY, SUITE 100
McALLEN, TEXAS 78503
TEL (956) 664-0286
FAX (956) 664-0282
Halff Associates firm registration number is F-312

STATE OF TEXAS
THOMAS E. DEARMIN
54352
REGISTERED PROFESSIONAL ENGINEER
11-8-18

UTRGV
The University of Texas Rio Grande Valley

UNIVERSITY OF TEXAS RIO GRANDE VALLEY
SCHOOL OF MEDICINE
TEAM BASED LEARNING CENTER
PROJECT NO: 903-1159
EDINBURG, TX
100% CONSTRUCTION DOCUMENTS

Issue/Revision

#	DESCRIPTION	DATE

Sheet Title
ELECTRICAL DETAILS II

Date
NOVEMBER 08, 2018

Project Number	Drawn By	Checked By
33828	G.C.	T.D.

Sheet Number
E-302

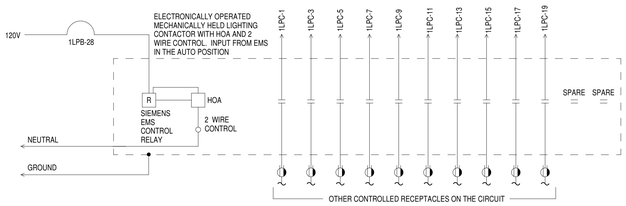

RCC-1A

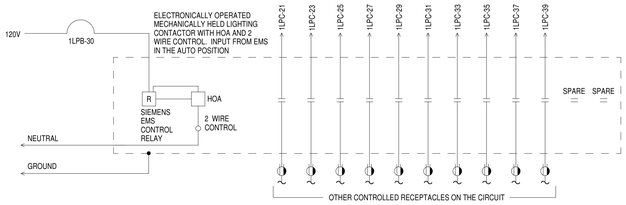

RCC-1B

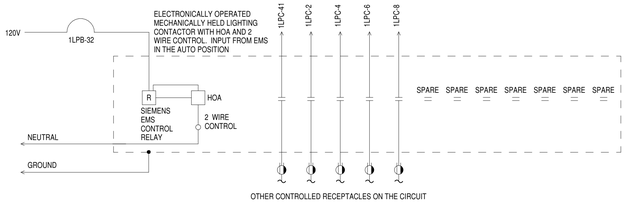

RCC-1C

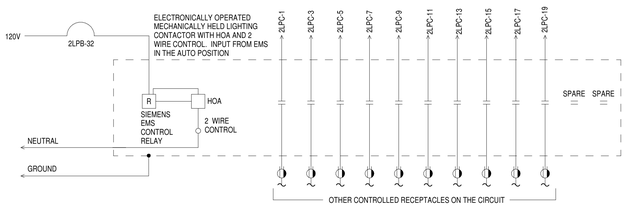

RCC-2A

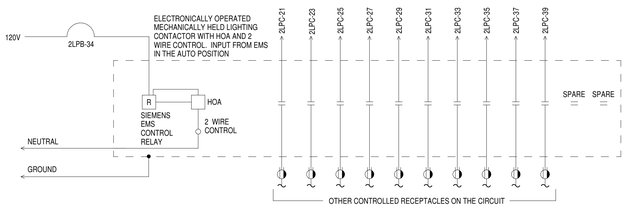

RCC-2B

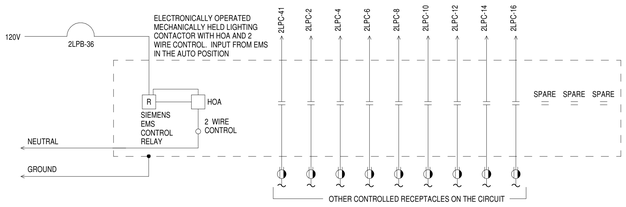

RCC-2C

RECEPTACLE CONTROL CONTACTOR - WIRING DETAIL

3 N.T.S.

AMERICAN ELECTRIC POWER COMPANY DISTRIBUTION STANDARDS

CONTRACTOR SHALL OBTAIN GUIDE FOR ELECTRIC SERVICE AND METER INSTALLATIONS AND COORDINATE WITH AEP FOR LATEST AEP STANDARDS AND INSTALLATION AND REQUIREMENTS

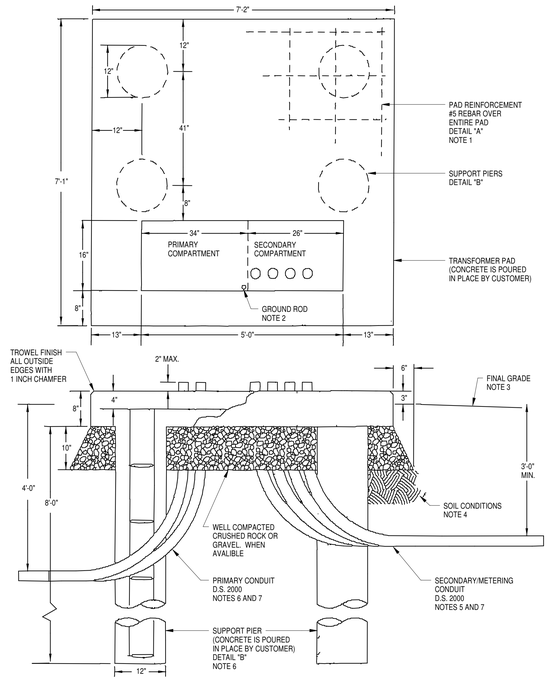

NOTES:

1. SLAB REINFORCEMENT SHALL BE .5 REBARS, ON CENTER (OC) SPACING TO FOLLOW DIMENSIONS SHOWN ON THE DRAWING WITH 4" COVER. REINFORCING BARS SHALL CONFORM TO ASTM A615 GRADE 60. CONCRETE SHALL HAVE A MINIMUM COMPRESSIVE STRENGTH OF 4000 PSI AFTER 28 DAYS.
2. FOR GROUND ROD PLACEMENT, REFER TO DS 2235,2236, OR 2237.
3. FINAL GRADE SHALL BE ESTABLISHED BEFORE INSTALLATION OF PAD.
4. CONCRETE PAD WITH PIERS IS TO BE INSTALLED ONLY WHEN HIGH VOLUME CLAY OR SAND TYPE SOILS ARE ENCOUNTERED. THESE SOIL TYPES ARE CHARACTERIZED BY EXTREME SURFACE CONDITION VARIATIONS OVER TIME. WHERE SOIL IS FOUND TO BE TOTALLY BEDROCK, SHALE OR HARDPAN, ELIMINATE DRILLED PIERS AND REFER TO DS 2020 OR DS2021.
5. THE NUMBER AND PLACEMENT OF SECONDARY CONDUITS TO BE DETERMINED AS REQUIRED BY THE CUSTOMER.
6. PRIMARY CONDUIT NUMBER, SIZE, LOCATION, AND DIRECTION TO BE SPECIFIED BY ENGINEERING. CONDUIT CAN BE FLEXIBLE, TYPE EB, OR SCHEDULE 40 PVC CONDUIT WITH 90 DEGREE, 36 INCH RADIUS BENDS.
7. BURIAL DEPTH FOR DIRECT BURIED CABLE OR CONDUIT IS DEFINED AS THE DISTANCE BETWEEN FINAL GRADE AND THE TOP OF THE CABLE OR CONDUIT. UNLESS OTHERWISE DESIGNATED BY ENGINEERING, DIRECT BURIED PRIMARY SUPPLY CABLES OR CONDUITS SHALL BE INSTALLED AT A BURIAL DEPTH OF NOT LESS THAN 2'-8", THESE INITAL DEPTHS ARE TO ALLOW FOR CHANGES TO SURFACE CONDITIONS. LOCAL AGREEMENTS AND CODES MAY REQUIRE ADDITIONAL DEPTH. IF THERE ARE KNOWN, EXTENSIVE CHANGES TO THE FINAL GRADE SUCH THAT THESE DEPTHS ARE NOT MAINTAINED, CORRECTIVE SCTION SHALL BE TAKEN.
8. PIER S SHALL BE 12" MINIMUM DIAMETER, 8'DEEP WITH 4-#4 VERTICAL REBAR AND #3TIESAT 12" ON CENTER (OC), AND PROVIDE A MINIMUM 3" COVER. THE #4 BEND BARS SHOULD BE 12" LONG IN THE HORIZONTAL DIRECTION.
9. PIER REBAR BENT IN THE HORIZONTAL DIRECTION SO THAT IT MAY TIE IN WITH THE REBAR.

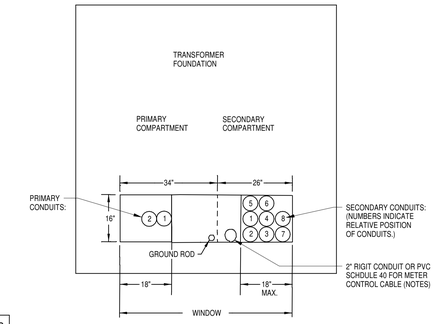

NOTES:

1. WHEN THE METERING TRANSFORMERS ARE LOCATED IN THE SECONDARY TERMINAL COMPARTMENT OF THE PADMOUNTED TRANSFORMER, THIS CONDUIT FOR THE METERING CONDUCTORS MUST BE RUN UNDERGROUND AND MUST ENTER THE TRANSFORMER PAD IN THE CONDUIT WINDOW.
2. THE METER LOCATION IS TO BE WITHIN 25 FEET OF THE TRANSFORMER PAD LOCATION.

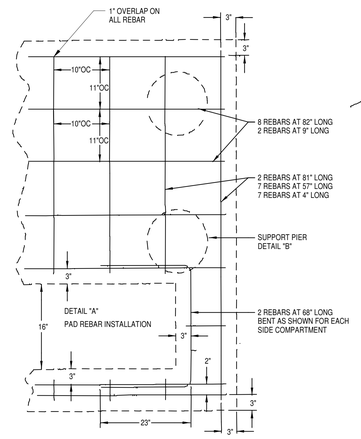

DETAIL "B"
PIER REBAR INSTALLATION

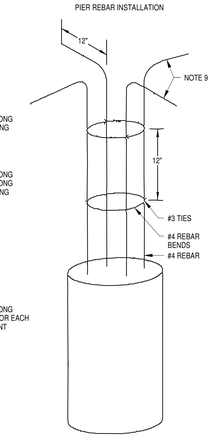

CONCRETE PAD AND PIERS FOR
THREE PHASE PAD-MOUNTED TRANSFORMER
HIGH VOLUME CLAY OR SAND TYPE SOIL APPLICATIONS
75KVA - 2500KVA
25KV AND BELOW

AEP UTILITY TRANSFORMER PAD DETAIL

2 N.T.S.

KEY NOTES:

1. REFER TO MECHANICAL EQUIPMENT CONNECTION SCHEDULE.

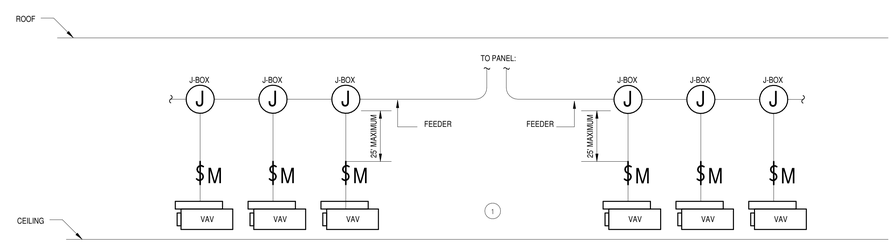

WIRING SCHEMATIC - MULTIPLE SINGLE DUCT BOXES

1 N.T.S.

muñoz & company
1017 NORTH MAIN SUITE 300
SAN ANTONIO, TEXAS 78212
O. 210.349.1163 F. 210.525.1038
WWW.MUNOZ-CO.COM

HALFF
5000 WEST MILITARY, SUITE 100
McALLEN, TEXAS 78503
TEL (956) 664-0286
FAX (956) 664-0282
Halff Associates firm registration number is F-312

STATE OF TEXAS
THOMAS E. DEARMIN
54352
REGISTERED PROFESSIONAL ENGINEER
11-8-18

UTRGV
The University of Texas Rio Grande Valley

UNIVERSITY OF TEXAS RIO GRANDE VALLEY
SCHOOL OF MEDICINE
TEAM BASED LEARNING CENTER
PROJECT NO: 903-1159
EDINBURG, TX
100% CONSTRUCTION DOCUMENTS

Issue/Revision

#	DESCRIPTION	DATE

Sheet Title
ELECTRICAL DETAILS III

Date
NOVEMBER 08, 2018

Project Number	Drawn By	Checked By
33828	G.C.	T.D.

Sheet Number
E-303

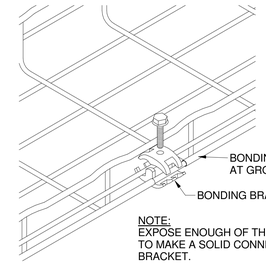

NOTE:
EXPOSE ENOUGH OF THE BONDING WIRE TO MAKE A SOLID CONNECTION TO BONDING BRACKET.

3 CABLE TRAY GROUNDING DETAIL
N.T.S.

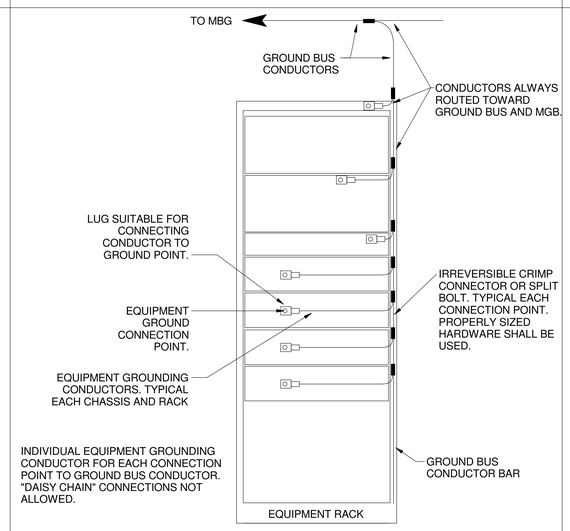

5 EQUIPMENT RACK GROUNDING DETAIL
N.T.S.

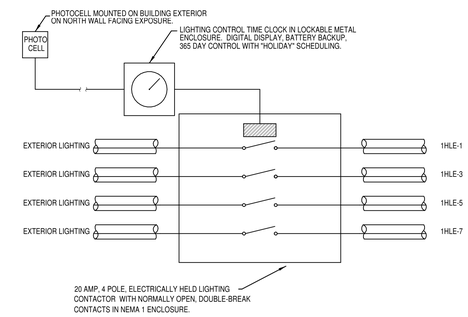

2 LIGHTING CONTACTOR CONTROL SCHEMATIC
N.T.S.

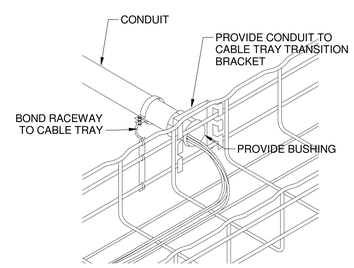

4 CONDUIT AT CABLE TRAY DETAIL
N.T.S.

GENERAL NOTES:

1. ALL STEEL CASING SHALL BE WELDED.
2. STEEL CASING SHALL BE CLOSED AT EACH END USING BRICK OR BLOCK AND MORTAR GROUTED.
3. CASING SPACERS SHALL BE USED TO INSTALL THE CARRIER PIPE INSIDE THE ENCASEMENT PIPE. CASING SPACERS SHALL FASTEN TIGHTLY ONTO THE CARRIER PIPE SO THAT WHEN THE CARRIER PIPE IS BEING INSTALLED THE SPACERS WILL NOT MOVE ALONG THE PIPELINE. CASING SPACERS SHALL BE DOUBLED ON EACH END OF THE ENCASEMENT.
4. PROJECTION TYPE CASING SPACERS SHALL BE CONSTRUCTED SECTIONS OF HIGH DENSITY POLYETHYLENE. THE FLEXIBLE SECTIONS SHALL BE JOINED TOGETHER AROUND THE PIPE TO PROVIDE A MINIMUM OF 16 PLASTIC PROJECTIONS PER SPACER SECTION.
5. INSTALLATION AND SIZE OF SPACERS SHALL BE PER MANUFACTURER'S RECOMMENDATIONS.

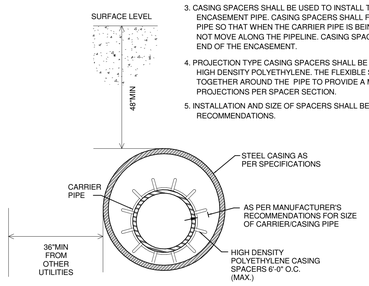

INSTALLATION		
CARRIER PIPE SIZE	PIPE CASING SIZE	MIN. WALL THICKNESS
2"	6"	0.375"
3"	10"	0.375"
4"	10"	0.375"
6"	14"	0.375"
8"	16"	0.375"
10"	18"	0.375"
12"	20"	0.375"
14", 15"	24"	0.375"
16"	26"	0.375"
18"	30"	0.375"
24"	36"	0.375"
36"	48"	0.625"

1 PIPE ENCASEMENT DETAIL
N.T.S.

muñoz & company
1017 NORTH MAIN SUITE 300
SAN ANTONIO, TEXAS 78212
O. 210.349.1163 F. 210.525.1038
WWW.MUNOZ-CO.COM

HALFF
5000 WEST MILITARY, SUITE 100
McALLEN, TEXAS 78503
TEL (956) 664-0286
FAX (956) 664-0282
Halff Associates firm registration number is F-312

STATE OF TEXAS
THOMAS E. DEARMIN
54352
REGISTERED PROFESSIONAL ENGINEER
11-8-18

UTRGV
The University of Texas Rio Grande Valley

UNIVERSITY OF TEXAS RIO GRANDE VALLEY
SCHOOL OF MEDICINE
TEAM BASED LEARNING CENTER
PROJECT NO: 903-1159
EDINBURG, TX
100% CONSTRUCTION DOCUMENTS

Issue/Revision

#	DESCRIPTION	DATE

Sheet Title
ELECTRICAL DETAILS IV

Date
NOVEMBER 08, 2018

Project Number	Drawn By	Checked By
33828	G.C.	T.D.

Sheet Number
E-304

TRANSFORMER SCHEDULE					
MARK	KVA	PRIMARY VOLTAGE	SECONDARY VOLTAGE	GROUNDING ELECTRODE	REMARKS
T1	75 kVA	480V	208Y/120V	#2	
T2	75 kVA	480V	208Y/120V	#2	

FEEDER / BRANCH CIRCUIT SCHEDULE

MARK	RACEWAY	PHASE CONDUCTORS	NEUTRAL CONDUCTORS	GROUND CONDUCTORS	REMARKS
P001	4"	----	----	----	----
M001	1-1/4"	----	----	----	----
60A4	1-1/4	3#4	1#4	1#10	----
100A4	1-1/2"	3#1	1#1	1#8	----
150A3	1-1/2"	3#1/0	----	1#6	----
250A4	2-1/2"	3-250KCMIL	1-250KCMIL	1#4	----
400A4	2"	3#3/0	1#3/0	1#3	TWO PARALLEL FEEDERS REQUIRED
800P	3"	3#300KCMIL	1#300KCMIL	----	THREE PARALLEL FEEDERS REQUIRED
800A4	3"	3#300KCMIL	1#300KCMIL	1#1/0	THREE PARALLEL FEEDERS REQUIRED
3T75YP	1 1/2"	3#1/0	----	1#6	----
3T75YS	2 1/2"	3#4/0	1#4/0	1#4	----

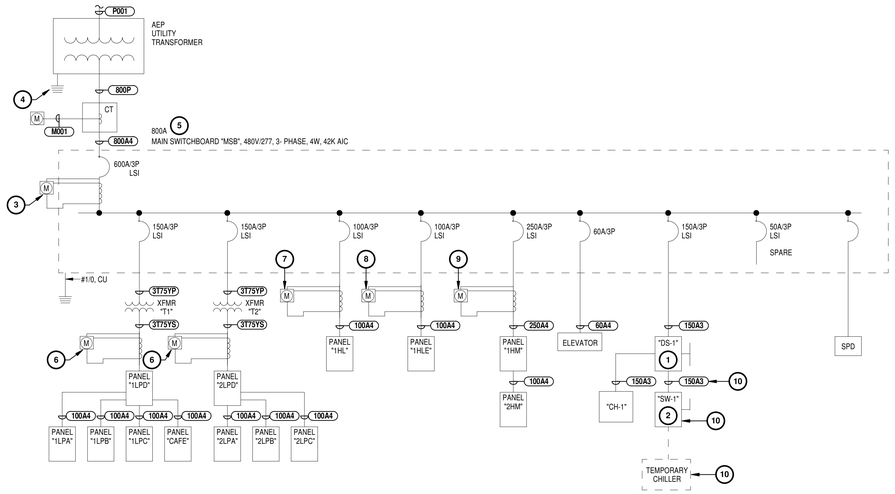

1 ELECTRICAL ONE-LINE DIAGRAM
N.T.S.

KEY NOTES:

1. SQUARE D 200A NON FUSED 480VOLT 3 POLE DOUBLE THROW SAFETY SWITCH NEMA 3R CLASS 3140, CAT#9234HRB. LABLE "LINE IN", "NORMAL CHILLER", PORABLE CHILLER".
2. FOR PORABLE CHILLER. 200A, 3 POLE, NEMA 3R DOCKING STATION WITH NON FUSED DISCONNECT. PART OF ALTERNATE #5.
3. SHARK METER. REFER TO E-203 FOR NOTES.
4. PROVIDE WITH THREE 5/8"x10 FEET RODS PER NEC.
5. FOR SWITCHBOARD "MSB" FURNISH AND INSTALL WITH INFRARED MONITOR WINDOW.
6. FURNISH AND INSTALL E-MON E20-208400-JKIT FOR RECEPTACLE ENERGY MONITORING.
7. FURNISH AND INSTALL E-MON E20-480100-JKIT FOR INTERIOR LIGHTING ENERGY MONITORING.
8. FURNISH AND INSTALL E-MON E20-480100-JKIT FOR EXTERIOR LIGHTING ENERGY MONITORING.
9. FURNISH AND INSTALL E-MON E20-480400-JKIT FOR HVAC ENERGY MONITORING.
10. PART OF ALTERNATE #5.

muñoz & company
1017 NORTH MAIN SUITE 300
SAN ANTONIO, TEXAS 78212
O. 210.349.1163 F. 210.525.1038
WWW.MUNOZ-CO.COM

HALFF
5000 WEST MILITARY, SUITE 100
McALLEN, TEXAS 78503
TEL (956) 664-0286
FAX (956) 664-0282
Halff Associates firm registration number is F-312

STATE OF TEXAS
THOMAS E. DEARMIN
54352
REGISTERED PROFESSIONAL ENGINEER
11-8-18

UTRGV
The University of Texas Rio Grande Valley

UNIVERSITY OF TEXAS RIO GRANDE VALLEY
SCHOOL OF MEDICINE
TEAM BASED LEARNING CENTER
PROJECT NO: 903-1159
EDINBURG, TX
100% CONSTRUCTION DOCUMENTS

Issue/Revision

#	DESCRIPTION	DATE

Sheet Title
ELECTRICAL ONE-LINE DIAGRAM & SCHEDULES

Date
NOVEMBER 08, 2018

Project Number	Drawn By	Checked By
33828	G.C.	T.D.

Sheet Number
E-401

LIGHTING FIXTURE SCHEDULE

TYPE	MANUFACTURER	MODEL NUMBER	LAMPS	VA	DESCRIPTION	NOTES
A1	LITHONIA	2GTL-4-30L-EZ1-LP840	LED	27 VA	2'X4' LENSED TROFFER, LED, 3000 LUMENS	
A4	LITHONIA	2GTL-4-60L-EZ1-LP840	LED	49 VA	2'X4' LENSED TROFFER, LED, 6000 LUMENS	
A4E	LITHONIA	2GTL-4-60L-EZ1-LP840	LED	49 VA	2'X4' LENSED TROFFER, LED, 6000 LUMENS, FIXTURE HAS BACKUP THRU INVERTER	
A5	LITHONIA	2GTL-4-72L-EZ1-LP840	LED	54 VA	2'X4' LENSED TROFFER, LED, 7200 LUMENS	
A5E	LITHONIA	2GTL-4-72L-EZ1-LP840-EL14L	LED	54 VA	2'X4' LENSED TROFFER, LED, 7200 LUMENS, FIXTURE HAS BACKUP THRU INVERTER	
C	GOTHAM	ICO CYL-35/20-4AR-50D-EZB-ACC180-XX	LED	27 VA	INCITO SUSPENDED CYLINDER, LED,XX=VERIFY FINISH WITH ARCHITECT	
CV	LITHONIA	ZL1N-L46-5000LM-L/LENS	LED	34 VA	46" STRIP, LED, 5000 LUMENS	
D1	GOTHAM	EVO-40/15-6AR-MWD-LSS-MVOLT-EZ1	LED	19 VA	6" DOWNLIGHT, LED, 1500 LUMENS	
D1E	GOTHAM	EVO-40/15-6AR-MWD-LSS-MVOLT-EZ1	LED	19 VA	6" DOWNLIGHT, LED, 1500 LUMENS, FIXTURE HAS BACKUP THRU INVERTER	
D2	GOTHAM	EVO-40/25-6AR-MWD-LSS-MVOLT-EZ1	LED	30 VA	6" DOWNLIGHT, LED, 2500 LUMENS	
D2E	GOTHAM	EVO-40/25-6AR-MWD-LSS-MVOLT-EZ1	LED	30 VA	6" DOWNLIGHT, LED, 2500 LUMENS, FIXTURE HAS BACKUP THRU INVERTER	
F2	FINELITE	HP4 R-2'-H-840-F-277-SC-XX	LED	14 VA	LINEAR RECESSED LED, XX=VERIFY CEILING TYPE WITH ARCHITECT	
F4	FINELITE	HP4 R-4'-H-840-F-277-SC-XX	LED	29 VA	LINEAR RECESSED LED, XX=VERIFY CEILING TYPE WITH ARCHITECT	
F4E	FINELITE	HP4 R-4'-H-840-F-277-SC-XX	LED	29 VA	LINEAR RECESSED LED, XX=VERIFY CEILING TYPE WITH ARCHITECT, FIXTURE HAS BACKUP THRU INVERTER	
F6	FINELITE	HP4 R-6'-H-840-F-277-SC-XX	LED	42 VA	LINEAR RECESSED LED, XX=VERIFY CEILING TYPE WITH ARCHITECT	
F6E	FINELITE	HP4 R-6'-H-840-F-277-SC-XX	LED	42 VA	LINEAR RECESSED LED, XX=VERIFY CEILING TYPE WITH ARCHITECT, FIXTURE HAS BACKUP THRU INVERTER	
FDE	LITHONIA	DMW2-L24-3000LM-ACL-MD-MVOLT-GZ1-40K-80CRI	LED	27 VA	ENCLOSED INDUSTRIAL	
G	MARK	MGL-48IN-9000LM-40K-DARK=LIGHT-277-CCV	LED	92 VA	MAGELLAN LED	
H2	LITHONIA	ZL1N-L48-5000LM-MDD-MVOLT-40K-80CRI-WH-ZACVH	LED	67 VA	4' STRIP, LED, 5000 LUMENS, PROVIDE WITH AIRCRAFT CABLE WITH HOOK	
H2E	LITHONIA	ZL1N-L48-5000LM-MDD-MVOLT-40K-80CRI-WH-ZACVH	LED	67 VA	4' STRIP, LED, 5000 LUMENS, PROVIDE WITH AIRCRAFT CABLE WITH HOOK, FIXTURE HAS BACKUP THRU INVERTER XX= REFER TO VOLTAGE COLUMN FOR VOLTAGE, FIXTURE HAS BACKUP THRU INVERTER	
J2.5E	FINELITE	HP-4 WM-ID-2' 6"-V-V--8-3500K-TG-F-277V-MB-SC	LED	46 VA	WALL MOUNTED LED, 2'-6" LENGTH, FIXTURE HAS BACKUP THRU INVERTER	
J4E	FINELITE	HP-4 WM-ID-4'-V-V--8-3500K-TG-F-277V-MB-SC	LED	74 VA	WALL MOUNTED LED, 4' LENGTH, FIXTURE HAS BACKUP THRU INVERTER	
J5.5E	FINELITE	HP-4 WM-ID-5' 6"-V-V--8-3500K-TG-F-277V-MB-SC	LED	102 VA	WALL MOUNTED LED, 5'-6" LENGTH, FIXTURE HAS BACKUP THRU INVERTER	
K	FLUXWERX	FS1-D-D-A/C-40-XX-S4-S-03	LED	86 VA	FOLD SPOKE 4, LED, XX = VERIFY FINISH WITH ARCHITECT	
M4	FLUXWERX	TR1-24-D-40-E1-M	LED	47 VA	TRANSOM LED	
M4E	FLUXWERX	TR1-24-D-40-E1-M	LED	47 VA	TRANSOM LED, FIXTURE HAS BACKUP THRU INVERTER	
N	LITHONIA	FMVCSL-48IN-MVOLT-40K-90CRI-XX	LED	32 VA	WALL MOUNTED LED, XX=VERIFY FINISH WITH ARCHITECT	
P	LITHONIA	RAZ-24IN-30K-90CRI-UCD JB	LED	19 VA	UNDERCABINET LED LIGHT	
R	LITHONIA	OLWX1 LED-40W-40K	LED	20 VA	LED WALLPACK	
SE	BEGA	33816	LED	14 VA	LED WALLPACK, FIXTURE HAS BACKUP THRU INVERTER	
T	BEGA	77266	LED	5 VA	LED PATH BOLLARD	
U	VISIONAIRE	CAL-1-L-T5-84-530-LED-4K-UNV-PT-XX- SF277	LED	136 VA	LED POLE, PROVIDE WITH 14' POLE #RNTS-4R-14'-XXX-XXX-S1-XX	
VE	GOTHAM	LND6-40/20-L06/AR-LSS-MVOLT-EZ10-SCA6	LED	23 VA	6" DOWNLIGHT, LED, PROVIDE WITH SLOPE ADAPTER, FIXTURE HAS BACKUP THRU INVERTER	
X1	LITHONIA	LQM-S-W-3-R-120/277-EL-N-SD	INCLUDED	6 VA	POLYCARBONATE EMERGENCY EXIT LIGHT, LED LAMPS, SINGLE FACE, PROVIDE WITH EMERGENCY BATTERY PACK	
X2	LITHONIA	LQM-S-W-3-R-120/277-EL-N-SD	INCLUDED	6 VA	POLYCARBONATE EMERGENCY EXIT LIGHT, LED LAMPS, SINGLE FACE, PROVIDE WITH EMERGENCY BATTERY PACK	

PANEL: 1CAFE

Location: STO. 1.101A
Supply From: 1LDP
Mounting: Surface
Enclosure: Type 1

Volts: 120/208 Wye
Phases: 3
Wires: 4

A.I.C. Rating: 10,000
Mains Type: MCB
Mains Rating: 150 A
MCB Rating: 150 A

Notes:

CKT	Circuit Description	Trip	Poles	A		B		C		Poles	Trip	Circuit Description	CKT
1	RECEPTACLE COFFEE/JUICE BAR 1.101	20 A	1	180 VA	0 VA					--	--	SPACE	2
3	OTHER COFFEE/JUICE BAR 1.101	20 A	1			180 VA	0 VA			--	--	SPACE	4
5	OTHER COFFEE/JUICE BAR 1.101	20 A	1					180 VA	0 VA	--	--	SPACE	6
7	OTHER COFFEE/JUICE BAR 1.101	20 A	1	180 VA	0 VA					--	--	SPACE	8
9	RECEPTACLE STO. 1.101A	20 A	1			180 VA	0 VA			--	--	SPACE	10
11	RECEPTACLE STO. 1.101A	20 A	1					180 VA	0 VA	--	--	SPACE	12
13	RECEPTACLE STO. 1.101A	20 A	1	180 VA	0 VA					--	--	SPACE	14
15	DWH-2	30 A	2			2250 VA	0 VA			--	--	SPACE	16
17	--	--	--					2250 VA	0 VA	--	--	SPACE	18
19	SPARE	20 A	1	0 VA	0 VA					--	--	SPACE	20
21	SPARE	20 A	1			0 VA	0 VA			--	--	SPACE	22
23	SPARE	20 A	1					0 VA	0 VA	--	--	SPACE	24
25	SPARE	20 A	1	0 VA	0 VA					--	--	SPACE	26
27	SPARE	20 A	1			0 VA	0 VA			--	--	SPACE	28
29	SPARE	20 A	1					0 VA	0 VA	--	--	SPACE	30
31	SPARE	20 A	1	0 VA	0 VA					--	--	SPACE	32
33	SPARE	20 A	1			0 VA	0 VA			--	--	SPACE	34
35	SPARE	20 A	1					0 VA	0 VA	--	--	SPACE	36
37	SPARE	20 A	1	0 VA	0 VA					--	--	SPACE	38
39	SPARE	20 A	1			0 VA	0 VA			--	--	SPACE	40
41	SPARE	20 A	1					0 VA	0 VA	--	--	SPACE	42
		Total Load:		540 VA		2610 VA		2610 VA					
		Total Amps:		5 A		24 A		24 A					

Load Classification	Connected Load	Demand Factor	Estimated Demand	Panel Totals	
Other	5040 VA	100.00%	5040 VA		
Receptacle	720 VA	100.00%	720 VA	**Total Conn. Load:**	5760 VA
				Total Est. Demand:	5760 VA
				Total Conn. Current:	16 A
				Total Est. Demand Current:	16 A

VAV BOX NOTES:-
1.REFER TO PANEL AND CIRCUIT NUMBERS FOR VAV GROUPING.
2.REFER TO DETAIL 2/E-303 FOR VAV WIRING DIAGRAM.
3.REFER TO DETAIL 4/E-301 FOR DISCONNECT LOCATION.
4.HOMERUN FEEDER SHALL BE SIZED PER FEEDER SERVING THE EQUIPMENT. BRANCH CIRCUIT SIZE IS FOR TAP FEEDERS ONLY.

MECHANICAL EQUIPMENT CONNECTION SCHEDULE - VAV BOXES

MARK	PANEL	CIRCUIT	NOTES	DISCONNECTING MEANS AND/OR BRANCH CIRCUIT SIZE
VAV-1-01	1HM	7,9,11	1,2,3,4	MOTOR OPERATED SWITCH / 3#10,#12G,3/4"C
VAV-1-02	1HM	7,9,11	1,2,3,4	MOTOR OPERATED SWITCH / 3#10,#12G,3/4"C
VAV-1-03	1HM	7,9,11	1,2,3,4	MOTOR OPERATED SWITCH / 3#10,#12G,3/4"C
VAV-1-04	1HM	15,17,19	1,2,3,4	MOTOR OPERATED SWITCH / 3#10,#12G,3/4"C
VAV-1-05	1HM	15,17,19	1,2,3,4	MOTOR OPERATED SWITCH / 3#10,#12G,3/4"C
VAV-1-06	1HM	20	1,2,3,4	MOTOR OPERATED SWITCH / 2#10,#12G,3/4"C
VAV-1-07	1HM	21	1,2,3,4	MOTOR OPERATED SWITCH / 2#10,#12G,3/4"C
VAV-1-08	1HM	13	3	MOTOR OPERATED SWITCH / 2#10,#12G,3/4"C
VAV-1-09	1HM	21	1,2,3,4	MOTOR OPERATED SWITCH / 2#10,#12G,3/4"C
VAV-1-10	1HM	13	1,2,3,4	MOTOR OPERATED SWITCH / 2#10,#12G,3/4"C
VAV-1-11	1HM	13	1,2,3,4	MOTOR OPERATED SWITCH / 2#10,#12G,3/4"C
VAV-1-12	1HM	13	1,2,3,4	MOTOR OPERATED SWITCH / 2#10,#12G,3/4"C
VAV-1-13	1HM	15,17,19	1,2,3,4	MOTOR OPERATED SWITCH / 3#10,#12G,3/4"C
VAV-1-14	1HM	15,17,19	1,2,3,4	MOTOR OPERATED SWITCH / 3#10,#12G,3/4"C
VAV-1-15	1HM	15,17,19	1,2,3,4	MOTOR OPERATED SWITCH / 3#10,#12G,3/4"C
VAV-1-16	1HM	23	1,2,3,4	MOTOR OPERATED SWITCH / 2#10,#12G,3/4"C
VAV-1-17	1HM	23	1,2,3,4	MOTOR OPERATED SWITCH / 2#10,#12G,3/4"C
VAV-1-18	1HM	21	1,2,3,4	MOTOR OPERATED SWITCH / 2#10,#12G,3/4"C
VAV-1-19	1HM	21	1,2,3,4	MOTOR OPERATED SWITCH / 2#10,#12G,3/4"C
VAV-1-20	1HM	23	1,2,3,4	MOTOR OPERATED SWITCH / 2#10,#12G,3/4"C
VAV-1-21	1HM	20	1,2,3,4	MOTOR OPERATED SWITCH / 2#10,#12G,3/4"C
VAV-1-22	1HM	20	1,2,3,4	MOTOR OPERATED SWITCH / 2#10,#12G,3/4"C
VAV-1-23	1HM	15,17,19	1,2,3,4	MOTOR OPERATED SWITCH / 3#10,#12G,3/4"C
VAV-1-24	1HM	20	1,2,3,4	MOTOR OPERATED SWITCH / 2#10,#12G,3/4"C
VAV-2-01	2HM	13	1,2,3,4	MOTOR OPERATED SWITCH / 2#10,#12G,3/4"C
VAV-2-02	2HM	1,3,5	1,2,3,4	MOTOR OPERATED SWITCH / 3#10,#12G,3/4"C
VAV-2-03	2HM	1,3,5	1,2,3,4	MOTOR OPERATED SWITCH / 3#10,#12G,3/4"C
VAV-2-04	2HM	15	1,2,3,4	MOTOR OPERATED SWITCH / 2#12,#12G,3/4"C
VAV-2-05	2HM	1,3,5	1,2,3,4	MOTOR OPERATED SWITCH / 3#10,#12G,3/4"C
VAV-2-06	2HM	1,3,5	1,2,3,4	MOTOR OPERATED SWITCH / 3#10,#12G,3/4"C
VAV-2-07	2HM	1,3,5	1,2,3,4	MOTOR OPERATED SWITCH / 3#10,#12G,3/4"C
VAV-2-08	2HM	1,3,5	1,2,3,4	MOTOR OPERATED SWITCH / 3#10,#12G,3/4"C
VAV-2-09	2HM	15	1,2,3,4	MOTOR OPERATED SWITCH / 2#10,#12G,3/4"C
VAV-2-10	2HM	7,9,11	1,2,3,4	MOTOR OPERATED SWITCH / 3#10,#12G,3/4"C
VAV-2-11	2HM	15	3	MOTOR OPERATED SWITCH / 2#12,#12G,3/4"C
VAV-2-12	2HM	7,9,11	1,2,3,4	MOTOR OPERATED SWITCH / 3#10,#12G,3/4"C
VAV-2-13	2HM	17	1,2,3,4	MOTOR OPERATED SWITCH / 2#10,#12G,3/4"C
VAV-2-14	2HM	15	1,2,3,4	MOTOR OPERATED SWITCH / 2#12,#12G,3/4"C
VAV-2-15	2HM	7,9,11	1,2,3,4	MOTOR OPERATED SWITCH / 3#10,#12G,3/4"C
VAV-2-16	2HM	13	1,2,3,4	MOTOR OPERATED SWITCH / 2#10,#12G,3/4"C
VAV-2-17	2HM	13	1,2,3,4	MOTOR OPERATED SWITCH / 2#10,#12G,3/4"C
VAV-2-18	2HM	13	1,2,3,4	MOTOR OPERATED SWITCH / 2#10,#12G,3/4"C
VAV-2-19	2HM	7,9,11	1,2,3,4	MOTOR OPERATED SWITCH / 3#10,#12G,3/4"C
VAV-2-20	2HM	17	1,2,3,4	MOTOR OPERATED SWITCH / 2#10,#12G,3/4"C
VAV-2-21	2HM	17	1,2,3,4	MOTOR OPERATED SWITCH / 2#10,#12G,3/4"C
VAV-2-22	2HM	7,9,11	1,2,3,4	MOTOR OPERATED SWITCH / 3#10,#12G,3/4"C
VAV-2-23	2HM	7,9,11	1,2,3,4	MOTOR OPERATED SWITCH / 3#10,#12G,3/4"C
VAV-2-24	2HM	7,9,11	1,2,3,4	MOTOR OPERATED SWITCH / 3#10,#12G,3/4"C
VAV-2-25	2HM	7,9,11	1,2,3,4	MOTOR OPERATED SWITCH / 3#10,#12G,3/4"C

MECHANICAL EQUIPMENT CONNECTION SCHEDULE - UNIT HEATER

MARK	PANEL	CIRCUIT	NOTES	DISCONNECTING MEANS AND/OR BRANCH CIRCUIT SIZE
UH-1	1HM	25,27,29		30A/-/3P NEMA 1 DISCONNECT SWITCH / 3#12,#12G,3/4"C

MECHANICAL EQUIPMENT CONNECTION SCHEDULE - WATER HEATERS

MARK	PANEL	CIRCUIT	NOTES	DISCONNECTING MEANS AND/OR BRANCH CIRCUIT SIZE
DWH-1	1LPA	30,32		30A/-/2P NEMA 1 DISCONNECT SWITCH / 2#10,#10G,3/4"C
DWH-2	1CAFE	15,17		30A/-/2P NEMA 1 DISCONNECT SWITCH / 2#10,#10G,3/4"C

MECHANICAL EQUIPMENT CONNECTION SCHEDULE - VFD'S

MARK	PANEL	CIRCUIT	NOTES	DISCONNECTING MEANS AND/OR BRANCH CIRCUIT SIZE
VFD-1	1HM	31,33,35	VFD FOR AHU-1	3#6,#10G,1"C, MAKE CONNECTION TO AHU-1 ALSO
VFD-2	1HM	37,39,41	VFD FOR CHWP-1	3#12,#12G,3/4"C, MAKE CONNECTION TO CHWP-1 ALSO
VFD-3	1HM	2,4,6	VFD FOR CHWP-2	3#12,#12G,3/4"C, MAKE CONNECTION TO CHWP-2 ALSO
VFD-4	1HM	8,10,12	VFD FOR RAF-1	3#12,#12G,3/4"C, MAKE CONNECTION TO RAF-1 ALSO

MECHANICAL EQUIPMENT CONNECTION SCHEDULE - CIRCULATING PUMP

MARK	PANEL	CIRCUIT	NOTES	DISCONNECTING MEANS AND/OR BRANCH CIRCUIT SIZE
CP-1	1LPB	39		30A/-/1P NEMA 1 DISCONNECT SWITCH / 2#12,#12G,3/4"C

MECHANICAL EQUIPMENT CONNECTION SCHEDULE - FANS

MARK	PANEL	CIRCUIT	NOTES	DISCONNECTING MEANS AND/OR BRANCH CIRCUIT SIZE
EF-1	2LPB	19		2#12,#12G,3/4" CONTROLLED VIA BUILDING MANAGEMENT SYSTEM

MECHANICAL EQUIPMENT CONNECTION SCHEDULE - DOMESTIC WATER...

MARK	PANEL	CIRCUIT	NOTES	DISCONNECTING MEANS AND/OR BRANCH CIRCUIT SIZE
DWP-1	1HM	14,16,18		30A/-/3P NEMA 1 DISCONNECT SWITCH / 3#12,#12G,3/4"C

MECHANICAL EQUIPMENT CONNECTION SCHEDULE - CHILLER

MARK	PANEL	CIRCUIT	NOTES	DISCONNECTING MEANS AND/OR BRANCH CIRCUIT SIZE
CH-1	MSB	19,21,23		REFER TO SHEET E-401 FOR MORE DISCONNECT AND FEEDER INFORMATION

MECHANICAL EQUIPMENT CONNECTION SCHEDULE - MINI SPLIT SYSTEM

MARK	PANEL	CIRCUIT	NOTES	DISCONNECTING MEANS AND/OR BRANCH CIRCUIT SIZE
FCCU-1	2LPB	32,34		30A/-/2P NEMA 1 DISCONNECT SWITCH / 2#12,#12G,3/4"C
FCU-1	2LPB	32,34	ELECTRICAL CONTRACTOR TO PROVIDE SINGLE CIRCUIT POWER FROM SERVICE TO OUTDOOR UNIT TO WIRE TO INDOOR UNIT	30A/-/2P NEMA 1 DISCONNECT SWITCH / 2#12,#12G,3/4"C

muñoz & company
1017 NORTH MAIN SUITE 300
SAN ANTONIO, TEXAS 78212
O. 210.349.1163 F. 210.525.1038
W W W . M U N O Z - C O . C O M

HALFF
5000 WEST MILITARY, SUITE 100
McALLEN, TEXAS 78503
TEL (956) 664-0286
FAX (956) 664-0282
Halff Associates firm registration number is F-312

STATE OF TEXAS
THOMAS E. DEARMIN
54352
REGISTERED PROFESSIONAL ENGINEER
11-8-18

UTRGV
The University of Texas Rio Grande Valley

UNIVERSITY OF TEXAS RIO GRANDE VALLEY
SCHOOL OF MEDICINE TEAM BASED LEARNING CENTER
PROJECT NO: 903-1159
EDINBURG, TX
100% CONSTRUCTION DOCUMENTS

Issue/Revision

#	DESCRIPTION	DATE

Sheet Title
ELECTRICAL SCHEDULES I

Date
NOVEMBER 08, 2018

Project Number	Drawn By	Checked By
33828	G.C.	T.D.

Sheet Number
E-402

PANEL: 1HL

Location: ELEC. 1.100H
Supply From: MSB
Mounting: Surface
Enclosure: Type 1
Volts: 480/277 Wye
Phases: 3
Wires: 4
A.I.C. Rating: 10,000
Mains Type: MLO
Mains Rating: 100 A

Notes:

CKT	Circuit Description	Trip	Poles	A		B		C		Poles	Trip	Circuit Description	CKT
1	LTG 1.100-2, 1.100B, 1.100A, 1.100D, 1.100C, 2.106-3...	20 A	1	2227 VA	0 VA					--	--	SPACE	2
3	LTG 1.103, 1.102, 1.100G, 1.100H, 1.104	20 A	1			2137 VA	0 VA			--	--	SPACE	4
5	LTG 1.110, 1.123A, 1.123, 1.105, 1.106, 1.107, 1.108,...	20 A	1					2014 VA	0 VA	--	--	SPACE	6
7	LTG 1.112A, 1.112, 1.113, 1.114, 1.101A, 1.101, 1.117...	20 A	1	2208 VA	0 VA					--	--	SPACE	8
9	LIGHTING ROOM 1S2	20 A	1			718 VA	0 VA			--	--	SPACE	10
11	LIGHTING ROOM 2.100G, 2.100H, 2.100B, 2.100E,...	20 A	1					1828 VA	0 VA	--	--	SPACE	12
13	LTG OPEN OFFICE 2.100A	20 A	1	522 VA	0 VA					--	--	SPACE	14
15	LTG 2.122, 2.121, 2.120, 2.119, 2.118, 2.117, 2.116,...	20 A	1			2017 VA	0 VA			--	--	SPACE	16
17	LTG 2.106, 2.105, 2.104, 2.103, 2.102, 2.101, 2.114,...	20 A	1					1544 VA	0 VA	--	--	SPACE	18
19	LTG 2.144, 2.145, 2.146, 2.139, 2.140, 2.141, 2.149,...	20 A	1	1316 VA	0 VA					--	--	SPACE	20
21	LTG 2.129, 2.129A, 2.131A, 2.131B, 2.128, 2.131, 2.13...	20 A	1			1654 VA	0 VA			--	--	SPACE	22
23	SPARE	20 A	1					0 VA	0 VA	--	--	SPACE	24
25	SPARE	20 A	1	0 VA	0 VA					--	--	SPACE	26
27	SPARE	20 A	1			0 VA	0 VA			--	--	SPACE	28
29	SPARE	20 A	1					0 VA	0 VA	--	--	SPACE	30
31	SPARE	20 A	1	0 VA	0 VA					--	--	SPACE	32
33	SPARE	20 A	1			0 VA	0 VA			--	--	SPACE	34
35	SPARE	20 A	1					0 VA	0 VA	--	--	SPACE	36
37	SPARE	20 A	1	0 VA	0 VA					--	--	SPACE	38
39	SPARE	20 A	1			0 VA	0 VA			--	--	SPACE	40
41	SPARE	20 A	1					0 VA	0 VA	--	--	SPACE	42
		Total Load:		6273 VA		6526 VA		5386 VA					
		Total Amps:		23 A		24 A		19 A					

Load Classification	Connected Load	Demand Factor	Estimated Demand	Panel Totals	
Lighting	17917 VA	125.00%	22396 VA		
Other	268 VA	100.00%	268 VA	**Total Conn. Load:**	18185 VA
				Total Est. Demand:	22664 VA
				Total Conn. Current:	22 A
				Total Est. Demand Current:	27 A

PANEL: 1HLE

Location: ELEC. 1.100H
Supply From: MSB
Mounting: Surface
Enclosure: Type 1
Volts: 480/277 Wye
Phases: 3
Wires: 4
A.I.C. Rating: 10,000
Mains Type: MLO
Mains Rating: 100 A

Notes:

CKT	Circuit Description	Trip	Poles	A		B		C		Poles	Trip	Circuit Description	CKT
1	LIGHTING - EXTERIOR	20 A	1	277 VA	0 VA					1	20 A	SPARE	2
3	LIGHTING - EXTERIOR	20 A	1			40 VA	0 VA			1	20 A	SPARE	4
5	LIGHTING - EXTERIOR	20 A	1					55 VA	0 VA	1	20 A	SPARE	6
7	LIGHTING - EXTERIOR	20 A	1	272 VA	0 VA					1	20 A	SPARE	8
9	SPARE	20 A	1			0 VA	0 VA			1	20 A	SPARE	10
11	SPARE	20 A	1					0 VA	0 VA	1	20 A	SPARE	12
		Total Load:		549 VA		40 VA		55 VA					
		Total Amps:		2 A		0 A		0 A					

Load Classification	Connected Load	Demand Factor	Estimated Demand	Panel Totals	
Lighting	207 VA	125.00%	259 VA		
Lighting - Exterior	437 VA	100.00%	437 VA	**Total Conn. Load:**	644 VA
				Total Est. Demand:	696 VA
				Total Conn. Current:	1 A
				Total Est. Demand Current:	1 A

PANEL: 1HM

Location: ELEC. 1.100H
Supply From: MSB
Mounting: Surface
Enclosure: Type 1
Volts: 480/277 Wye
Phases: 3
Wires: 4
A.I.C. Rating: 25,000
Mains Type: MLO
Mains Rating: 400 A

Notes:

CKT	Circuit Description	Trip	Poles	A		B		C		Poles	Trip	Circuit Description	CKT
1	PANEL "2HM"	250 A	3	18547 VA	941 VA					3	20 A	VFD-3	2
3	--	--	--			16347 VA	941 VA			--	--	--	4
5	--	--	--					18367 VA	941 VA	--	--	--	6
7	VAV-1-01,02,03	30 A	3	5533 VA	3045 VA					3	20 A	VFD-4	8
9	--	--	--			5533 VA	3045 VA			--	--	--	10
11	--	--	--					5533 VA	3045 VA	--	--	--	12
13	VAV-1-08,10,11,12	30 A	1	5180 VA	1720 VA					3	20 A	DWP-1	14
15	VAV-1-04,05,13,14,23	30 A	3			6367 VA	1720 VA			--	--	--	16
17	--	--	--					6367 VA	1720 VA	--	--	--	18
19	--	--	--	6367 VA	5080 VA					1	30 A	VAV-1-06,21,22,24	20
21	VAV-1-07,09,18,19	30 A	1			6400 VA	1000 VA			1	20 A	HEAT TRACE	22
23	VAV-1-16,17,20	30 A	1					4700 VA	0 VA	1	20 A	SPARE	24
25	UH-1	20 A	3	1107 VA	0 VA					1	20 A	SPARE	26
27	--	--	--			1107 VA	0 VA			1	20 A	SPARE	28
29	--	--	--					1107 VA	0 VA	1	20 A	SPARE	30
31	VFD-1	50 A	3	11072 VA	0 VA					1	20 A	SPARE	32
33	--	--	--			11072 VA	0 VA			1	20 A	SPARE	34
35	--	--	--					11072 VA	0 VA	1	20 A	SPARE	36
37	VFD-2	20 A	3	941 VA	0 VA					1	20 A	SPARE	38
39	--	--	--			941 VA	0 VA			1	20 A	SPARE	40
41	--	--	--					941 VA	0 VA	1	20 A	SPARE	42
		Total Load:		59532 VA		54472 VA		53792 VA					
		Total Amps:		215 A		197 A		194 A					

Load Classification	Connected Load	Demand Factor	Estimated Demand	Panel Totals	
HVAC	161636 VA	100.00%	161636 VA		
Motor	1000 VA	100.00%	1000 VA	**Total Conn. Load:**	167796 VA
Other	5160 VA	100.00%	5160 VA	**Total Est. Demand:**	167796 VA
Power	0 VA	0.00%	0 VA	**Total Conn. Current:**	202 A
				Total Est. Demand Current:	202 A

PANEL: 1LDP

Location: ELEC. 1.100H
Supply From: T1
Mounting: Surface
Enclosure: Type 1
Volts: 120/208 Wye
Phases: 3
Wires: 4
A.I.C. Rating: 18,000
Mains Type: MCB
Mains Rating: 250 A
MCB Rating: 250 A

Notes:

CKT	Circuit Description	Trip	Poles	A		B		C		Poles	Trip	Circuit Description	CKT
1	PANEL "1LPA"	100 A	3	11735 VA	0 VA					--	--	SPACE	2
3	--	--	--			9120 VA	0 VA			--	--	SPACE	4
5	--	--	--					11520 VA	0 VA	--	--	SPACE	6
7	PANEL "1LPB"	100 A	3	7174 VA	0 VA					--	--	SPACE	8
9	--	--	--			5681 VA	0 VA			--	--	SPACE	10
11	--	--	--					6500 VA	0 VA	--	--	SPACE	12
13	PANEL "1LPC"	100 A	3	6840 VA	0 VA					--	--	SPACE	14
15	--	--	--			5220 VA	0 VA			--	--	SPACE	16
17	--	--	--					5040 VA	0 VA	--	--	SPACE	18
19	PANEL "CAFE"	100 A	3	540 VA	0 VA					--	--	SPACE	20
21	--	--	--			2610 VA	0 VA			--	--	SPACE	22
23	--	--	--					2610 VA	0 VA	--	--	SPACE	24
25	SPACE	100 A	3	0 VA	0 VA					3	30 A	SPD	26
27	--	--	--			0 VA	0 VA			--	--	--	28
29	--	--	--					0 VA	0 VA	--	--	--	30
		Total Load:		26289 VA		22631 VA		25670 VA					
		Total Amps:		223 A		189 A		218 A					

Load Classification	Connected Load	Demand Factor	Estimated Demand	Panel Totals	
Lighting	54 VA	125.00%	68 VA		
Other	17916 VA	100.00%	17916 VA	**Total Conn. Load:**	74590 VA
Receptacle	49620 VA	60.08%	29810 VA	**Total Est. Demand:**	54794 VA
Power	6500 VA	100.00%	6500 VA	**Total Conn. Current:**	207 A
Elevator	500 VA	100.00%	500 VA	**Total Est. Demand Current:**	152 A

PANEL: 1LPA

Location: ELEC. 1.100H
Supply From: 1LDP
Mounting: Surface
Enclosure: Type 1
Volts: 120/208 Wye
Phases: 3
Wires: 4
A.I.C. Rating: 10,000
Mains Type: MLO
Mains Rating: 100 A

Notes:

CKT	Circuit Description	Trip	Poles	A		B		C		Poles	Trip	Circuit Description	CKT
1	OTHER CLASSROOM 1.102	20 A	1	180 VA	180 VA					1	20 A	RECEPTACLE PBL 1.109	2
3	RECEPTACLE CLASSROOM 1.102	20 A	1			360 VA	720 VA			1	20 A	RECEPTACLE ROOM 1.105, 1.106, 1.108, 1.107	4
5	RECEPTACLE CLASSROOM 1.102	20 A	1					360 VA	720 VA	1	20 A	RECEPTACLE OFFICE 1.124	6
7	RECEPTACLE CLASSROOM 1.102	20 A	1	360 VA	540 VA					1	20 A	OTHER ROOM 1.105, 1.106, 1.107	8
9	OTHER CLASSROOM 1.102	20 A	1			360 VA	720 VA			1	20 A	RECEPTACLE OFFICE 1.126	10
11	OTHER CLASSROOM 1.102	20 A	1					180 VA	720 VA	1	20 A	RECEPTACLE ROOM 1.100B, 1.100C	12
13	RECEPTACLE CLASSROOM 1.102	20 A	1	540 VA	720 VA					1	20 A	RECEPTACLE PBL 1.113	14
15	RECEPTACLE LOBBY-1 1.100-1	20 A	1			1440 VA	360 VA			1	20 A	OTHER ROOM 1.113, 1.114	16
17	RECEPTACLE	20 A	1					360 VA	360 VA	1	20 A	RECEPTACLE ROOM 1.113, 1.114	18
19	RECEPTACLE ROOM 1.100A, 1.100-1, 1.100D	20 A	1	540 VA	360 VA					1	20 A	RECEPTACLE ROOM 1.112A, 1.112, 1.115	20
21	RECEPTACLE ROOM 1.110, 1.117, 1.119	20 A	1			1540 VA	1180 VA			1	20 A	RECEPTACLE WOMEN 1.116	22
23	RECEPTACLE CORRIDOR 1.100A	20 A	1					720 VA	1725 VA	1	20 A	OTHER WOMEN 1.116	24
25	HANDDRYER MEN 1.117	20 A	1	1725 VA	720 VA					1	20 A	RECEPTACLE OFFICE 1.129	26
27	ROOM 1.101A, 1.111, 1.100-2	20 A	1			360 VA	500 VA			1	20 A	SIGN	28
29	RECEPTACLE ROOM 1.111, 1.122	20 A	1					540 VA	2250 VA	2	20 A	DWH-1	30
31	RECEPTACLE COLLABORATION 1.111	20 A	1	1440 VA	2250 VA					--	--	--	32
33	RECEPTACLE ROOM 1.120, 1.109, 1.123A	20 A	1			360 VA	500 VA			1	20 A	PLUMBING SENSORS	34
35	HANDDRYER UNISEX 1.110	20 A	1					1725 VA	1500 VA	1	20 A	PLUMBING SENSORS	36
37	RECEPTACLE STO. 1.120	20 A	1	180 VA	2000 VA					1	20 A	ELECTRONIC TRAP PRIMERS	38
39	RECEPTACLE PBL 1.109	20 A	1			720 VA	0 VA			1	20 A	SPARE	40
41	OTHER ROOM 1.108, 1.109	20 A	1					360 VA	0 VA	1	20 A	SPARE	42
		Total Load:		11735 VA		9120 VA		11520 VA					
		Total Amps:		101 A		76 A		99 A					

Load Classification	Connected Load	Demand Factor	Estimated Demand	Panel Totals	
Other	11835 VA	100.00%	11835 VA		
Receptacle	16040 VA	81.17%	13020 VA	**Total Conn. Load:**	32375 VA
Power	4500 VA	100.00%	4500 VA	**Total Est. Demand:**	29355 VA
				Total Conn. Current:	90 A
				Total Est. Demand Current:	81 A

PANEL: 1LPB

Location: ELEC. 1.100H
Supply From: 1LDP
Mounting: Surface
Enclosure: Type 1
Volts: 120/208 Wye
Phases: 3
Wires: 4
A.I.C. Rating: 10,000
Mains Type: MLO
Mains Rating: 100 A

Notes:

CKT	Circuit Description	Trip	Poles	A		B		C		Poles	Trip	Circuit Description	CKT
1	RECEPTACLE 1.107, 1.108	20 A	1	720 VA	180 VA					1	20 A	RECEPTACLE CONFERENCE /STUDY 1.122	2
3	RECEPTACLE 1.106, 1.105	20 A	1			720 VA	540 VA			1	20 A	RECEPTACLE STO. 1.123A	4
5	RECEPTACLE	20 A	1					500 VA	720 VA	1	20 A	RECEPTACLE 1.131, 1.130	6
7	RECEPTACLE CORRIDOR 1.100E	20 A	1	720 VA	720 VA					1	20 A	RECEPTACLE STUDY CARRELS 1.104	8
9	RECEPTACLE STUDY CARRELS 1.104	20 A	1			360 VA	180 VA			1	20 A	RECEPTACLE COFFEE/JUICE BAR 1.101	10
11	RECEPTACLE STUDY CARRELS 1.104	20 A	1					360 VA	180 VA	1	20 A	RECEPTACLE STO. 1.101A	12
13	RECEPTACLE PBL 1.103	20 A	1	900 VA	360 VA					1	20 A	RECEPTACLE	14
15	RECEPTACLE PBL 1.103	20 A	1			180 VA	500 VA			1	20 A	RECEPTACLE COFFEE/JUICE BAR 1.101	16
17	RECEPTACLE 1.100G, 1.103	20 A	1					720 VA	500 VA	1	20 A	RECEPTACLE ELEV. EQ. 1.118	18
19	RECEPTACLE 1.100G, 1.100F	20 A	1	720 VA	234 VA					1	20 A	RECEPTACLE 1E1	20
21	RECEPTACLE CORRIDOR 1.100B	20 A	1			1440 VA	360 VA			1	20 A	RECEPTACLE	22
23	RECEPTACLE CORRIDOR 1.100B	20 A	1					1440 VA	360 VA	1	20 A	RECEPTACLE STUDY CARRELS 1.104	24
25	RECEPTACLE 1.100B, 1.100A	20 A	1	720 VA	360 VA					1	20 A	RECEPTACLE STUDY CARRELS 1.104	26
27	RECEPTACLE	20 A	1			540 VA	0 VA			1	20 A	RECEPTACLE CONTROL CONTACTOR	28
29	RECEPTACLE CLASSROOM 1.102	20 A	1					1000 VA	0 VA	1	20 A	RECEPTACLE CONTROL CONTACTOR	30
31	RECEPTACLE CLASSROOM 1.102	20 A	1	1000 VA	0 VA					1	20 A	RECEPTACLE CONTROL CONTACTOR	32
33	RECEPTACLE CLASSROOM 1.102	20 A	1			360 VA	180 VA			1	20 A	IRRIGATION CONTROLLER	34
35	RECEPTACLE SECURITY 1.112	20 A	1					360 VA	180 VA	1	20 A	FACP	36
37	RECEPTACLE SECURITY 1.112	20 A	1	360 VA	180 VA					1	20 A	FAWC	38
39	CP-1	20 A	1			219 VA	102 VA			1	20 A	OTHER MECH. 1.100G	40
41	WS-1	20 A	1					180 VA	0 VA	1	20 A	SMOKE DAMPERS	42
		Total Load:		7174 VA		5681 VA		6500 VA					
		Total Amps:		61 A		47 A		55 A					

Load Classification	Connected Load	Demand Factor	Estimated Demand	Panel Totals	
Lighting	54 VA	125.00%	68 VA		
Other	1041 VA	100.00%	1041 VA	**Total Conn. Load:**	19355 VA
Receptacle	15760 VA	81.73%	12880 VA	**Total Est. Demand:**	16489 VA
Power	2000 VA	100.00%	2000 VA	**Total Conn. Current:**	54 A
Elevator	500 VA	100.00%	500 VA	**Total Est. Demand Current:**	46 A

muñoz & company
1017 NORTH MAIN SUITE 300
SAN ANTONIO, TEXAS 78212
O. 210.349.1163 F. 210.525.1038
WWW.MUNOZ-CO.COM

HALFF
5000 WEST MILITARY, SUITE 100
McALLEN, TEXAS 78503
TEL (956) 664-0286
FAX (956) 664-0282
Halff Associates firm registration number is F-312

STATE OF TEXAS
THOMAS E. DEARMIN
54352
REGISTERED
PROFESSIONAL ENGINEER
11-8-18

UTRGV
The University of Texas Rio Grande Valley

UNIVERSITY OF TEXAS RIO GRANDE VALLEY
SCHOOL OF MEDICINE TEAM BASED LEARNING CENTER
PROJECT NO: 903-1159
EDINBURG, TX
100% CONSTRUCTION DOCUMENTS

Issue/Revision

#	DESCRIPTION	DATE

Sheet Title
ELECTRICAL SCHEDULES II

Date
NOVEMBER 08, 2018

Project Number	Drawn By	Checked By
33828	G.C.	T.D.

Sheet Number
E-403

PANEL: 1LPC

Location: ELEC. 1.100H
Supply From: 1LDP
Mounting: Surface
Enclosure: Type 1

Volts: 120/208 Wye
Phases: 3
Wires: 4

A.I.C. Rating: 10,000
Mains Type: MLO
Mains Rating: 100 A

Notes:

CKT	Circuit Description	Trip	Poles	A		B		C		Poles	Trip	Circuit Description	CKT
1	RECEPTACLE OFFICE 1.123	20 A	1	720 VA	1080 VA					1	20 A	RECEPTACLE CLASSROOM 1.102	2
3	RECEPTACLE CONFERENCE /STUDY 1.122	20 A	1			360 VA	720 VA			1	20 A	RECEPTACLE PBL 1.103	4
5	RECEPTACLE CLASSROOM 1.102	20 A	1					720 VA	720 VA	1	20 A	RECEPTACLE PBL 1.114	6
7	RECEPTACLE CLASSROOM 1.102	20 A	1	720 VA	720 VA					1	20 A	RECEPTACLE HUD/TD OFFICE 1.115	8
9	RECEPTACLE CLASSROOM 1.102	20 A	1			720 VA	0 VA			1	20 A	SPARE	10
11	RECEPTACLE CLASSROOM 1.102	20 A	1					720 VA	0 VA	1	20 A	SPARE	12
13	RECEPTACLE CLASSROOM 1.102	20 A	1	720 VA	0 VA					1	20 A	SPARE	14
15	RECEPTACLE 1.105, 1.106	20 A	1			720 VA	0 VA			1	20 A	SPARE	16
17	RECEPTACLE 1.108, 1.107	20 A	1					720 VA	0 VA	1	20 A	SPARE	18
19	RECEPTACLE CLASSROOM 1.102	20 A	1	720 VA	0 VA					1	20 A	SPARE	20
21	RECEPTACLE CLASSROOM 1.102	20 A	1			720 VA	0 VA			1	20 A	SPARE	22
23	RECEPTACLE CLASSROOM 1.102	20 A	1					360 VA	0 VA	1	20 A	SPARE	24
25	RECEPTACLE CLASSROOM 1.102	20 A	1	720 VA	0 VA					1	20 A	SPARE	26
27	RECEPTACLE CONFERENCE /STUDY 1.122	20 A	1			720 VA	0 VA			1	20 A	SPARE	28
29	RECEPTACLE CLASSROOM 1.102	20 A	1					720 VA	0 VA	1	20 A	SPARE	30
31	RECEPTACLE CLASSROOM 1.102	20 A	1	720 VA	0 VA					1	20 A	SPARE	32
33	RECEPTACLE LARGE OFFICE 1.131	20 A	1			540 VA	0 VA			1	20 A	SPARE	34
35	RECEPTACLE OFFICE 1.130	20 A	1					360 VA	0 VA	1	20 A	SPARE	36
37	RECEPTACLE 1.128, 1.129	20 A	1	720 VA	0 VA					1	20 A	SPARE	38
39	RECEPTACLE 1.127, 1.126	20 A	1			720 VA	0 VA			1	20 A	SPARE	40
41	RECEPTACLE 1.125, 1.124	20 A	1					720 VA	0 VA	1	20 A	SPARE	42
		Total Load:		6840 VA		5220 VA		5040 VA					
		Total Amps:		57 A		44 A		42 A					

Load Classification	Connected Load	Demand Factor	Estimated Demand	Panel Totals	
Receptacle	17100 VA	79.24%	13550 VA		
				Total Conn. Load:	17100 VA
				Total Est. Demand:	13550 VA
				Total Conn. Current:	47 A
				Total Est. Demand Current:	38 A

PANEL: 2HM

Location: ELEC. 2.106A
Supply From: 1HM
Mounting: Surface
Enclosure: Type 1

Volts: 480/277 Wye
Phases: 3
Wires: 4

A.I.C. Rating: 10,000
Mains Type: MCB
Mains Rating: 250 A
MCB Rating: 250 A

Notes:

CKT	Circuit Description	Trip	Poles	A		B		C		Poles	Trip	Circuit Description	CKT
1	VAV-2-02,03,05,06,07,08	30 A	3	6233 VA	0 VA					--	--	SPACE	2
3	--	--	--			6233 VA	0 VA			--	--	SPACE	4
5	--	--	--					6233 VA	0 VA	--	--	SPACE	6
7	VAV-2-10,12,15,19,22,23,24,25	30 A	3	6533 VA	0 VA					--	--	SPACE	8
9	--	--	--			6533 VA	0 VA			--	--	SPACE	10
11	--	--	--					6533 VA	0 VA	--	--	SPACE	12
13	VAV-2-01,09,16,17,18	30 A	1	5780 VA	0 VA					--	--	SPACE	14
15	VAV-2-04,09,11,14	30 A	1			3580 VA	0 VA			--	--	SPACE	16
17	VAV-2-13,20,21	30 A	1					5600 VA	0 VA	--	--	SPACE	18
19	SPARE	20 A	1	0 VA	0 VA					--	--	SPACE	20
21	SPARE	20 A	1			0 VA	0 VA			--	--	SPACE	22
23	SPARE	20 A	1					0 VA	0 VA	--	--	SPACE	24
25	SPARE	20 A	1	0 VA	0 VA					--	--	SPACE	26
27	SPARE	20 A	1			0 VA	0 VA			--	--	SPACE	28
29	SPARE	20 A	1					0 VA	0 VA	--	--	SPACE	30
		Total Load:		18547 VA		16347 VA		18367 VA					
		Total Amps:		68 A		59 A		67 A					

Load Classification	Connected Load	Demand Factor	Estimated Demand	Panel Totals	
HVAC	53260 VA	100.00%	53260 VA		
Other	0 VA	0.00%	0 VA	**Total Conn. Load:**	53260 VA
Power	0 VA	0.00%	0 VA	**Total Est. Demand:**	53260 VA
				Total Conn. Current:	64 A
				Total Est. Demand Current:	64 A

PANEL: 2LDP

Location: ELEC. 2.106A
Supply From: T2
Mounting: Surface
Enclosure: Type 1

Volts: 120/208 Wye
Phases: 3
Wires: 4

A.I.C. Rating: 18,000
Mains Type: MCB
Mains Rating: 250 A
MCB Rating: 250 A

Notes:

CKT	Circuit Description	Trip	Poles	A		B		C		Poles	Trip	Circuit Description	CKT
1	PANEL "2LPA"	100 A	3	7380 VA	0 VA					--	--	SPACE	2
3	--	--	--			7980 VA	0 VA			--	--	SPACE	4
5	--	--	--					7480 VA	0 VA	--	--	SPACE	6
7	PANEL "2LPB"	250 A	3	13312 VA	0 VA					--	--	SPACE	8
9	--	--	--			14193 VA	0 VA			--	--	SPACE	10
11	--	--	--					13480 VA	0 VA	--	--	SPACE	12
13	PANEL "2LPC"	100 A	3	6220 VA	0 VA					--	--	SPACE	14
15	--	--	--			7880 VA	0 VA			--	--	SPACE	16
17	--	--	--					6400 VA	0 VA	--	--	SPACE	18
19	SPACE	100 A	3	0 VA	0 VA					--	--	SPACE	20
21	--	--	--			0 VA	0 VA			--	--	SPACE	22
23	--	--	--					0 VA	0 VA	--	--	SPACE	24
25	SPACE	--	--	0 VA	0 VA					3	30 A	SPD	26
27	SPACE	--	--			0 VA	0 VA			--	--	--	28
29	SPACE	--	--					0 VA	0 VA	--	--	--	30
		Total Load:		26912 VA		30053 VA		27360 VA					
		Total Amps:		224 A		251 A		229 A					

Load Classification	Connected Load	Demand Factor	Estimated Demand	Panel Totals	
HVAC	4400 VA	100.00%	4400 VA		
Lighting	95 VA	125.00%	119 VA	**Total Conn. Load:**	84325 VA
Other	3450 VA	100.00%	3450 VA	**Total Est. Demand:**	62609 VA
Receptacle	53480 VA	59.35%	31740 VA	**Total Conn. Current:**	234 A
Power	22900 VA	100.00%	22900 VA	**Total Est. Demand Current:**	174 A

PANEL: 2LPA

Location: ELEC. 2.106A
Supply From: 2LDP
Mounting: Surface
Enclosure: Type 1

Volts: 120/208 Wye
Phases: 3
Wires: 4

A.I.C. Rating: 10,000
Mains Type: MLO
Mains Rating: 100 A

Notes:

CKT	Circuit Description	Trip	Poles	A		B		C		Poles	Trip	Circuit Description	CKT
1	RECEPTACLE OFFICE 2.106	20 A	1	360 VA	720 VA					1	20 A	RECEPTACLE OFFICE 2.120	2
3	RECEPTACLE ROOM 2.100M, 2.106A	20 A	1			360 VA	180 VA			1	20 A	RECEPTACLE COLLABORATION 2.125	4
5	RECEPTACLE OFFICE 2.104	20 A	1					720 VA	500 VA	1	20 A	POWER OPEN OFFICE 2.100A	6
7	RECEPTACLE ROOM 2.143, 2.142	20 A	1	720 VA	720 VA					1	20 A	RECEPTACLE OFFICE 2.117	8
9	RECEPTACLE OFFICE 2.102	20 A	1			720 VA	500 VA			1	20 A	POWER OPEN OFFICE 2.100A	10
11	HUDDLE 2.101	20 A	1					360 VA	720 VA	1	20 A	RECEPTACLE OFFICE 2.115	12
13	RECEPTACLE ROOM 2.100A, 2.100B, 2.100C	20 A	1	720 VA	720 VA					1	20 A	RECEPTACLE ROOM 2.145, 2.140	14
15	RECEPTACLE ROOM 2.100C, 2.100D	20 A	1			540 VA	1080 VA			1	20 A	RECEPTACLE OFFICE 2.113	16
17	MOTORIZED SHADE	20 A	1					500 VA	720 VA	1	20 A	RECEPTACLE OFFICE 2.112	18
19	RECEPTACLE CONFERENCE/ STUDY 2.124	20 A	1	180 VA	720 VA					1	20 A	RECEPTACLE ROOM 2.146, 2.139	20
21	RECEPTACLE ROOM 2.131B, 2.133, 2.134	20 A	1			1540 VA	720 VA			1	20 A	RECEPTACLE ROOM 2.138, 2.147	22
23	RECEPTACLE TD OFFICE 2.132	20 A	1					360 VA	720 VA	1	20 A	RECEPTACLE OFFICE 2.109	24
25	RECEPTACLE ROOM 2.144, 2.141	20 A	1	720 VA	720 VA					1	20 A	RECEPTACLE ROOM 2.137, 2.148	26
27	COLLABORATION 2.125	20 A	1			540 VA	720 VA			1	20 A	RECEPTACLE OFFICE 2.107	28
29	Receptacle COLLABORATION 2.125	20 A	1					720 VA	720 VA	1	20 A	RECEPTACLE ROOM 2.136, 2.149	30
31	CONFERENCE/ STUDY 2.124	20 A	1	540 VA	0 VA					1	20 A	RECEPTACLE CONTROL CONTACTOR	32
33	RECEPTACLE CORRIDOR 2.100H	20 A	1			720 VA	0 VA			1	20 A	RECEPTACLE CONTROL CONTACTOR	34
35	RECEPTACLE ROOM 2.100F, 2.135	20 A	1					720 VA	0 VA	1	20 A	RECEPTACLE CONTROL CONTACTOR	36
37	RECEPTACLE ROOM 2.123, 2.122A	20 A	1	360 VA	180 VA					1	20 A	MICROWAVE	38
39	RECEPTACLE COLLABORATION 2.125	20 A	1			180 VA	180 VA			1	20 A	MICROWAVE	40
41	RECEPTACLE OFFICE 2.121	20 A	1					720 VA	0 VA	1	20 A	SPARE	42
		Total Load:		6233 VA		7980 VA		7480 VA					
		Total Amps:		62 A		67 A		62 A					

Load Classification	Connected Load	Demand Factor	Estimated Demand	Panel Totals	
Receptacle	21340 VA	73.43%	15670 VA		
Power	1500 VA	100.00%	1500 VA	**Total Conn. Load:**	22840 VA
				Total Est. Demand:	17170 VA
				Total Conn. Current:	63 A
				Total Est. Demand Current:	48 A

PANEL: 2LPB

Location: ELEC. 2.106A
Supply From: 2LDP
Mounting: Surface
Enclosure: Type 1

Volts: 120/208 Wye
Phases: 3
Wires: 4

A.I.C. Rating: 10,000
Mains Type: MLO
Mains Rating: 250 A

Notes:

CKT	Circuit Description	Trip	Poles	A		B		C		Poles	Trip	Circuit Description	CKT
1	RECEPTACLE COFFEE 2.129A	20 A	1	500 VA	1440 VA					1	20 A	RECEPTACLE COPY/WORK ROOM 2.129	2
3	POWER DATA/I.T. 2.128	20 A	3			4800 VA	1440 VA			1	20 A	RECEPTACLE COPY/WORK ROOM 2.129	4
5	--	--	--					4800 VA	1200 VA	1	20 A	RECEPTACLE COFFEE 2.129A	6
7	--	--	--	4800 VA	500 VA					1	20 A	RECEPTACLE COFFEE 2.129A	8
9	POWER OPEN OFFICE 2.100F	20 A	1			500 VA	720 VA			1	20 A	RECEPTACLE TD OFFICE 2.130	10
11	POWER OPEN OFFICE 2.100F	20 A	1					500 VA	1680 VA	1	20 A	RECEPTACLE ROOM 2.131A, 2.131	12
13	RECEPTACLE OPEN OFFICE 2.100F	20 A	1	180 VA	360 VA					1	20 A	RECEPTACLE NURSING MOTHER'S SUITE 2.131	14
15	RECEPTACLE HUDDLE 2.123	20 A	1			360 VA	720 VA			1	20 A	RECEPTACLE HALL 2.100G	16
17	RECEPTACLE HUDDLE 2.123	20 A	1					540 VA	1725 VA	1	20 A	OTHER WOMEN 2.131A	18
19	EF-1	20 A	1	864 VA	1500 VA					1	20 A	PLUMBING SENSORS	20
21	OTHER MEN 2.131B	20 A	1			1725 VA	360 VA			1	20 A	RECEPTACLE	22
23	RECEPTACLE COPY/WORK ROOM 2.129	20 A	1					180 VA	360 VA	1	20 A	RECEPTACLE	24
25	RECEPTACLE COPY/WORK ROOM 2.129	20 A	1	180 VA	500 VA					1	20 A	POWER OPEN OFFICE 2.100F	26
27	RECEPTACLE ROOM 2.100F, 2.100G, 2.100E	20 A	1			720 VA	360 VA			1	20 A	OTHER STUDY 2.126	28
29	RECEPTACLE ROOM 2.100F, 2.100D	20 A	1					540 VA	500 VA	1	20 A	PLUMBING SENSORS	30
31	RECEPTACLE TD OFFICE 2.127	20 A	1	360 VA	1768 VA					2	20 A	FCCU-1	32
33	RECEPTACLE DATA/I.T. 2.128	20 A	1			360 VA	1768 VA			--	--	--	34
35	RECEPTACLE DATA/I.T. 2.128	20 A	1					360 VA	1000 VA	1	20 A	POWER ROOM 2.100G, 2.100F	36
37	RECEPTACLE DATA/I.T. 2.128	20 A	1	360 VA	0 VA					1	20 A	SPARE	38
39	RECEPTACLE DATA/I.T. 2.128	20 A	1			360 VA	0 VA			1	20 A	SPARE	40
41	LIGHTING ROOM 2.129, 2.129A	20 A	1					95 VA	0 VA	1	20 A	SPARE	42
		Total Load:		13312 VA		14193 VA		13480 VA					
		Total Amps:		111 A		118 A		113 A					

Load Classification	Connected Load	Demand Factor	Estimated Demand	Panel Totals	
HVAC	4400 VA	100.00%	4400 VA		
Lighting	95 VA	125.00%	119 VA	**Total Conn. Load:**	40985 VA
Other	3450 VA	100.00%	3450 VA	**Total Est. Demand:**	38939 VA
Receptacle	14140 VA	85.36%	12070 VA	**Total Conn. Current:**	114 A
Power	18900 VA	100.00%	18900 VA	**Total Est. Demand Current:**	108 A

PANEL: 2LPC

Location: ELEC. 2.106A
Supply From: 2LDP
Mounting: Surface
Enclosure: Type 1

Volts: 120/208 Wye
Phases: 3
Wires: 4

A.I.C. Rating: 10,000
Mains Type: MLO
Mains Rating: 100 A

Notes:

CKT	Circuit Description	Trip	Poles	A		B		C		Poles	Trip	Circuit Description	CKT
1	RECEPTACLE TD OFFICE 2.132	20 A	1	720 VA	720 VA					1	20 A	RECEPTACLE ROOM 2.110, 2.109	2
3	RECEPTACLE ROOM 2.126, 2.100H	20 A	1			1260 VA	720 VA			1	20 A	RECEPTACLE ROOM 2.112, 2.111	4
5	POWER OPEN OFFICE 2.100F	20 A	1					500 VA	1080 VA	1	20 A	RECEPTACLE ROOM 2.114, 2.113	6
7	RECEPTACLE ROOM 2.115, 2.116	20 A	1	720 VA	720 VA					1	20 A	RECEPTACLE ROOM 2.144, 2.141	8
9	POWER OPEN OFFICE 2.100F	20 A	1			500 VA	720 VA			1	20 A	RECEPTACLE ROOM 2.117, 2.118	10
11	RECEPTACLE HUDDLE 2.101	20 A	1					720 VA	720 VA	1	20 A	RECEPTACLE ROOM 2.119, 2.120	12
13	POWER OPEN OFFICE 2.100A	20 A	1	500 VA	720 VA					1	20 A	RECEPTACLE ROOM 2.121, 2.122	14
15	RECEPTACLE CONFERENCE/ STUDY 2.124	20 A	1			1440 VA	360 VA			1	20 A	RECEPTACLE ROOM 2.106, 2.106A	16
17	POWER OPEN OFFICE 2.100F	20 A	1					500 VA	0 VA	1	20 A	SPARE	18
19	RECEPTACLE COLLABORATION 2.125	20 A	1	540 VA	0 VA					1	20 A	SPARE	20
21	RECEPTACLE OFFICE 2.103	20 A	1			720 VA	0 VA			1	20 A	SPARE	22
23	RECEPTACLE ROOM 2.108, 2.107	20 A	1					720 VA	0 VA	1	20 A	SPARE	24
25	RECEPTACLE TD OFFICE 2.127	20 A	1	360 VA	0 VA					1	20 A	SPARE	26
27	RECEPTACLE ROOM 2.137, 2.148	20 A	1			720 VA	0 VA			1	20 A	SPARE	28
29	RECEPTACLE ROOM 2.136, 2.149	20 A	1					720 VA	0 VA	1	20 A	SPARE	30
31	RECEPTACLE ROOM 2.146, 2.139	20 A	1	720 VA	0 VA					1	20 A	SPARE	32
33	RECEPTACLE ROOM 2.138, 2.147	20 A	1			720 VA	0 VA			1	20 A	SPARE	34
35	RECEPTACLE OFFICE 2.105	20 A	1					720 VA	0 VA	1	20 A	SPARE	36
37	POWER OPEN OFFICE 2.100A	20 A	1	500 VA	0 VA					1	20 A	SPARE	38
39	RECEPTACLE ROOM 2.143, 2.142	20 A	1			720 VA	0 VA			1	20 A	SPARE	40
41	RECEPTACLE ROOM 2.145, 2.140	20 A	1					720 VA	0 VA	1	20 A	SPARE	42
		Total Load:		6220 VA		7880 VA		6400 VA					
		Total Amps:		52 A		66 A		54 A					

Load Classification	Connected Load	Demand Factor	Estimated Demand	Panel Totals	
Receptacle	18000 VA	77.78%	14000 VA		
Power	2500 VA	100.00%	2500 VA	**Total Conn. Load:**	20500 VA
				Total Est. Demand:	16500 VA
				Total Conn. Current:	57 A
				Total Est. Demand Current:	46 A

muñoz & company
1017 NORTH MAIN SUITE 300
SAN ANTONIO, TEXAS 78212
O. 210.349.1163 F. 210.525.1038
WWW.MUNOZ-CO.COM

HALFF
5000 WEST MILITARY, SUITE 100
McALLEN, TEXAS 78503
TEL (956) 664-0286
FAX (956) 664-0282
Halff Associates firm registration number is F-312

STATE OF TEXAS
THOMAS E. DEARMIN
54352
REGISTERED PROFESSIONAL ENGINEER
11-8-18

UTRGV
The University of Texas Rio Grande Valley

UNIVERSITY OF TEXAS RIO GRANDE VALLEY
SCHOOL OF MEDICINE TEAM BASED LEARNING CENTER
PROJECT NO: 903-1159
EDINBURG, TX
100% CONSTRUCTION DOCUMENTS

Issue/Revision

#	DESCRIPTION	DATE

Sheet Title
ELECTRICAL SCHEDULES III

Date
NOVEMBER 08, 2018

Project Number	Drawn By	Checked By
33828	G.C.	T.D.

Sheet Number
E-404

PLUMBING GENERAL LEGEND

PLUMBING ABBREVIATIONS

A	
AB	ASSEMBLY BILL
ABS	ACRYLONITRILE BUTADIENE STYRENE
ABV	ABOVE
AC	AIR COMPRESSOR
ACCU	AIR COOLED CONDENSING UNIT
AD	AREA DRAIN
ADA	AMERICAN WITH DISABILITIES ACT
ADJ	ADJUSTABLE
AD	ACCESS DOOR
AFF	ABOVE FINISH FLOOR
AFG	ABOVE FINISH GRADE
AFS	ABOVE FINISH SURFACE
AHU	AIR HANDLING UNIT
AL	ALUMINUM
AMP	AMPERE(S)
AP	ACCESS PANEL
APPROX	APPROXIMATE
ARCH	ARCHITECT, ARCHITECTURAL
AS	AIR SEPARATOR
ASHRAE	AMERICAN SOCIETY OF HEATING, REFRIGERATING AND AIR CONDITIONING ENGINEERS
ATF	AUTOMATIC TRANSMISSION FLUID
AUX	AUXILIARY
AV	AIR VENT
AW	ACID WASTE
B	
B	BOILER
BD	BLOW-DOWN
BEL	BELOW
BFF	BELOW FINISH FLOOR
BFP	BACKFLOW PREVENTER
BFV	BUTTERFLY VALVE
BHP	BRAKE HORSEPOWER
BKR	BREAKER
BLDG	BUILDING
BOD	BOTTOM OF DUCT
BOI	BID OPTION ITEM
BOP, B.O.P.	BOTTOM OF PIPE
BOS	BOTTOM OF STEEL
BTU	BRITISH THERMAL UNIT
BTUH	BRITISH THERMAL UNIT PER HOUR
BV	BALL VALVE
BWV	BACK WATER VALVE
C	
CA	COMPRESSED AIR
CAP	CAPACITY
CBV	CALIBRATED BALANCE VALVE
CD	CONDENSATE DRAIN
CDF	CONDENSATE DRAIN FUNNEL
CDP	CONDENSATE DRAIN PUMP
CF	CUBIC FEET
CFH	CUBIC FEET PER HOUR
CFM	CUBIC FEET PER MINUTE
CH	CHILLER
CI	CAST IRON
CIRC	CIRCULATING
CL	CENTER LINE
CLG	CEILING
CMU	CONCRETE MASONRY UNIT
CO	CLEANOUT
COL	COLUMN
COND	CONDENSATE
CONN	CONNECT, CONNECTION
CONT	CONTINUE, CONTINUATION
COTG	CLEANOUT TO GRADE
CONTR	CONTRACTOR
CP	CIRCULATING PUMP
CPVC	CHLORINATED POLYVINYL CHLORIDE
CR	CONDENSATE RECEIVER
CRAC	COMPUTER ROOM AIR CONDITIONING
CU	CONDENSING UNIT
CW	DOMESTIC COLD WATER
°C	DEGREES CELSIUS
D	
D	DEPTH
dB	DECIBEL
DESIG	DESIGNATION
DEG	DEGREE(S)
DFU	DRAINAGE FIXTURE UNIT
DIA OR ø	DIAMETER
DIM	DIMENSION
DISC	DISCONNECT
DISCH	DISCHARGE
DIST	DISTANCE
DN	DOWN
DS	DOWNSPOUT
DWG(S)	DRAWING(S)
DWH	DOMESTIC WATER HEATER
E	
(E)	EXISTING
EA	EACH
ECC	ECCENTRIC
EER	ENERGY EFFICIENCY RATIO
EF	EXHAUST FAN
EFF	EFFICIENCY
ELEV, EL	ELEVATION
ELEC	ELECTRICAL
ENCL	ENCLOSURE
EQ	EQUAL
EQUIP	EQUIPMENT
EQV	EARTHQUAKE VALVE
ET	EXPANSION TANK
EXH	EXHAUST
EXT	EXTERNAL
EXP. JOINT	EXPANSION JOINT
EWC	ELECTRIC WATER COOLER
EWS	EMERGENCY SHOWER AND EYE WASH
F	
°F	DEGREE FAHRENHEIT
FC	FAN COIL
FCO	FLOOR CLEANOUT
FCW	FILTERED COLD WATER
FD	FLOOR DRAIN
FFE, F.F.E.	FINISH FLOOR ELEVATION
FGE, F.G.E.	FINISH GRADE ELEVATION
FIN	FINISH
FLA	FULL LOAD AMPS
FLR	FLOOR
FP	FIRE PROTECTION
FPM	FEET PER MINUTE
FS	FLOOR SINK
FT	FOOT, FEET
FWD	FOOD WASTE DISPOSER
G	
G	NATURAL GAS (LOW PRESSURE)
GA	GAUGE, GAGE
GAL	GALLON
GALV	GALVANIZED
GL	GRID LINE
GM	GAS METER
GPH	GALLONS PER HOUR
GPM	GALLONS PER MINUTE
GPR	GAS PRESSURE REGULATOR
GRS	GREASE
GW	GREASE WASTE (KITCHEN)
H	
H	HEIGHT
HB	HOSE BIBB
HC	HEATING COIL
HD	HEAD
HOA	HAND-OFF-AUTOMATIC
HORIZ	HORIZONTAL
HP	HORSE POWER
HPW	HIGH PRESSURE WATER
HTG	HEATING
HTR	HEATER
HVAC	HEATING, VENTILATION AND AIR CONDITIONING
HW	DOMESTIC HOT WATER (SUPPLY)
HWR	DOMESTIC HOT WATER RETURN
HZ	HERTZ
I	
ICW	INDUSTRIAL COLD WATER
ID	INSIDE DIAMETER
I.E., IE	INVERT ELEVATION
IN	INCH
IN WG	INCHES WATER GAUGE
IN W.C.	INCHES OF WATER COLUMN
IT	INFORMATION TECHNOLOGY
IW	INDUSTRIAL WASTE
J	
J-BOX	JUNCTION BOX
K	
KW	KILOWATT
KWH	KILOWATT-HOUR
L	
L	LAVATORY
LBS OR #	POUND(S)
LF	LINEAR FEET
LO	LUBRICATING OIL
LOC	LOCATION
M	
MAX	MAXIMUM
MBH	BTU PER HOUR
MECH	MECHANICAL
MFR	MANUFACTURER
MIN	MINIMUM
MPG	MEDIUM PRESSURE GAS
MS	MOP SINK
MTD	MOUNTED
MV	MIXING VALVE
N	
N/A	NOT APPLICABLE
NC	NORMALLY CLOSED
NEMA	NATIONAL ELECTRICAL MANUFACTURER'S ASSOCIATION
NIC	NOT IN CONTRACT
NO	NORMALLY OPEN
NO.	NUMBER
NOM	NOMINAL
N.T.S., NTS	NOT TO SCALE
O	
OC	ON CENTER
OD	OUTSIDE DIAMETER
OF	OVERFLOW
OH	OVERHEAD
OMS	ORGANIZATIONAL MAINTENANCE SHOP
OPNG	OPENING
OPER	OPERATING
OSHA	OCCUPATIONAL SAFETY AND HEALTH ADMINISTRATION
P	
P	PUMP
PCD	PUMP CONDENSATE DRAIN
PD	PRESSURE DROP, PERIMETER DRAIN
PH	PHASE
PLBG	PLUMBING
PLC	PUMP LEVEL CONTROL(S)
PNL	PANEL
POC	POINT OF CONNECTION
POD	POINT OF DISCONNECT
PRESS	PRESSURE
PRS	PRESSURE REDUCING STATION
PRV	PRESSURE REDUCING VALVE
PS	PRESSURE SWITCH
PSF	POUNDS PER SQUARE FOOT
PSI	POUNDS PER SQUARE INCH
PSIA	POUNDS PER SQUARE INCH ABSOLUTE
PSIG	POUNDS PER SQUARE INCH GAUGE
PSV	PRESSURE SAFETY VALVE
PV	PLUG VALVE
PVC	POLYVINYL CHLORIDE
Q	
QTY	QTY QUANTITY
R	
(R)	RELOCATED
RD	ROOF DRAIN
RE:	REFERENCE, REFER
REC/RC	RECIRCULATE
REINF	REINFORCING
REQD	REQUIRED
REV	REVISE
RICB	REFRIGERATOR ICE CONNECTION BOX
RLA	RUNNING LOAD AMPERES
RM	ROOM
RPM	REVOLUTIONS PER MINUTE
RTU	ROOF TOP UNIT
RW	RAIN WATER
RWH	RAIN WATER HARVESTING
S	
S	SOIL (SANITARY SEWER)
SD	STORM DRAIN
SECT	SECTION
SEER	SEASONAL ENERGY EFFICIENCY RATIO
SH	SHOWER
SHD	SHOWER DRAIN
SF	SQUARE FEET
SHT	SHEET
SIM	SIMILAR
SHT MTL	SHEET METAL
SK	SINK
SMACNA	SHEET METAL AND AIR CONDITIONING CONTRACTORS NATIONAL ASSOCIATION
SOV	SHUT-OFF VALVE
SP	SUMP PUMP
SPEC	SPECIFICATION
SQ	SQUARE
SS	STAINLESS STEEL, SERVICE SINK
STD	STANDARD
STL	STEEL
STRUC	STRUCTURAL
SURF	SURFACE
SUSP	SUSPEND
SW	COLD WATER (SOFT)
SV	SUPPLY VALVE
SYM	SYMBOL
S=%	SLOPE AT PERCENTAGE SHOWN
T	
TDH	TOTAL DYNAMIC HEAD
TEMP	TEMPERATURE
THRU	THROUGH
TMV	THERMOSTATIC MIXING VALVE
TOP, T.O.P.	TOP OF PIPE
TP	TRAP PRIMER OR TRAP PRIMING
TYP	TYPICAL
TW	TEPID WATER
U	
U	URINAL
U/C	UNDER CUT
U/F	UNDER FLOOR
U/G	UNDER GROUND
U/S	UNDER SLAB
UFC	UNIFIED FACILITIES CRITERIA
UTR	UP THROUGH ROOF
UL	UNDERWRITERS LABORATORIES, INC.
UNO	UNLESS NOTED OTHERWISE
UPS	UNINTERRUPTIBLE POWER SUPPLY
USB	UNIT STORAGE BUILDING
V	
V	VENT
VAC	VOLTAGE ALTERNATING CURRENT
VBF	VENT BELOW FLOOR
VEL	VELOCITY
VERT	VERTICAL
VFD	VARIABLE FREQUENCY DRIVE
VLV	VALVE
VOR	VALVE ON RISER
VTR	VENT THROUGH ROOF
W	
W	WASTE
W/	WITH
W/O	WITHOUT
WAP	WALL ACCESS PANEL
WC	WATER CLOSET
w.c.	WATER COLUMN
WCO	WALL CLEANOUT
WF	WASH FOUNTAIN
WHA	WATER HAMMER ARRESTER
WM	WATER METER
WP	WEATHER PROOF
WPD	WATER PRESSURE DROP
WR	WATER RISER
WS	WATER SOFTENER
WSFU	WATER SUPPLY FIXTURE UNIT
WT	WEIGHT
X	
XFMR	TRANSFORMER

GENERAL PLUMBING NOTES

A. REFER TO SHEET G-001 BUILDING CODE ANALYSIS FOR APPLICABLE CODES.
B. PLUMBING CONTRACTOR SHALL ADHERE TO ALL CITY CODES, ORDINANCES, AND OTHER STATE AND LOCAL CODES THAT HAVE AUTHORITY OVER THIS PROJECT.
C. PLUMBING CONTRACTOR SHALL EXTEND ALL CONDENSATE AND INDIRECT DRAINS FROM EQUIPMENT TO FLOOR DRAIN AND/OR FLOOR SINK, IN MECHANICAL ROOM.
D. PLUMBING CONTRACTOR TO COORDINATE WITH MECHANICAL CONTRACTOR FOR ANY INSTALLATION OF PIPING AND DUCTWORK PRIOR TO BEGINNING OF CONSTRUCTION.
E. PLUMBING CONTRACTOR SHALL TERMINATE ALL WATER ROUGH-IN WITH SHUT-OFF VALVES BEFORE CONNECTING TO EQUIPMENT AND RELATED FIXTURES.
F. REFER TO ARCHITECTS DRAWINGS FOR MOUNTING HEIGHTS OF ALL PLUMBING FIXTURES.
G. INSULATE "P" TRAPS AND SUPPLIES AT HANDICAP LAVATORIES WITH INSULATION KIT.
H. PROVIDE VACUUM BREAKER TO ALL FIXTURES WITH HOSE CONNECTION AND APPLIANCES WITH DIRECT CONNECTIONS TO DOMESTIC WATER.
I. ALL FLOOR DRAINS AND/OR FLOOR SINKS SHALL BE PROVIDED WITH TRAP PRIMER CONNECTION.
J. PROVIDE STOPS AND WATER HAMMERS AT EACH FIXTURE OR GROUP OF FIXTURES.
K. ALL VENTS THROUGH ROOF SHALL BE FLASHED A MINIMUM OF 12" ABOVE ROOF. ALL VENTS SHALL BE MINIMUM OF 15' AWAY FROM ANY OUTSIDE INTAKE.
L. PROVIDE CEILING ACCESS PANEL FOR WATER ISOLATION VALVES, WATER HAMMER ARRESTORS AND TRAP PRIMER VALVES LOCATED IN OTHERWISE INACCESSIBLE AREAS.
M. PROVIDE INTUMESENT PUTTY AND SLEEVE ALL PIPING CROSSING FIRE RATED WALLS.
N. SLEEVE ALL OUTSIDE WALL, FLOOR SLAB, AND BEAM PENETRATIONS, COORDINATE WITH STRUCTURAL ENGINEER PRIOR TO COMMENCEMENT OF WORK TO AVOID CONFLICT.
O. DOMESTIC WATER LINE SHALL BE ROUTED, SO AS TO AVOID CROSSING OVER LIGHT FIXTURES WHERE POSSIBLE AND ELECTRICAL PANELS IN ALL CASES.
P. PLUMBING CONTRACTOR SHALL COORDINATE EXACT LOCATION OF UTILITIES WITH CIVIL ENGINEER, AND CITY PRIOR TO INSTALLATION. FAILURE TO COMPLY SHALL RESULT IN CORRECTING AT NO COST TO THE OWNER REPRESENTATIVE.
Q. GENERAL CONTRACTOR TO CONTACT CITY WATER, AND WASTE DEPARTMENTS 48 HOURS PRIOR TO TAP. NO EXCEPTIONS.
R. SANITARY SEWER PIPING SHALL BE SLOPED AT 1/4 INCH PER FOOT UNLESS OTHERWISE NOTED.
S. NO PIPING IS ALLOWEED TO BE ROUTED IN ANY ELECTRICAL OR IDF ROOMS.

PIPING SYMBOLS

SYMBOL	DESCRIPTION
4"ø S	SANITARY SEWER
2"ø V	SANITARY SEWER VENT
1"ø CD	CONDENSATE DRAIN
4"ø GW	GREASE WASTE
2"ø GV	GREASE VENT
4"ø AW	ACID WASTE
2"ø AV	ACID VENT
8"ø SD	STORM DRAIN
2 1/2"ø CW	DOMESTIC COLD WATER
2"ø HW	DOMESTIC HOT WATER (110°F)
3/4"ø HW140°F	DOMESTIC HOT WATER (140°F)
1/2"ø A	COMPRESSED AIR
2"ø NG	NARTURAL GAS
4"ø FP	FIRE PROTECTION
	BALL VALVE
	BALANCING VALVE
	BACKFLOW PREVENTER
	CHECK VALVE
	GATE VALVE
	GLOBE VALVE

muñoz & company
1017 NORTH MAIN SUITE 300
SAN ANTONIO, TEXAS 78212
O. 210.349.1163 F. 210.525.1038
WWW.MUNOZ-CO.COM

HALFF
5000 WEST MILITARY, SUITE 100
McALLEN, TEXAS 78503
TEL (956) 664-0286
FAX (956) 664-0282
Halff Associates firm registration number is F-312

STATE OF TEXAS
HUGO H. AVILA
90071
LICENSED PROFESSIONAL ENGINEER
11-8-18

UTRGV
The University of Texas Rio Grande Valley

UNIVERSITY OF TEXAS RIO GRANDE VALLEY
SCHOOL OF MEDICINE
TEAM BASED LEARNING CENTER
PROJECT NO: 903-1159
EDINBURG, TX
100% CONSTRUCTION DOCUMENTS

Issue/Revision

#	DESCRIPTION	DATE

Sheet Title
PLUMBING GENERAL LEGEND

Date
NOVEMBER 08, 2018

Project Number	Drawn By	Checked By
33828	E.M.	H.A.

Sheet Number
P-001

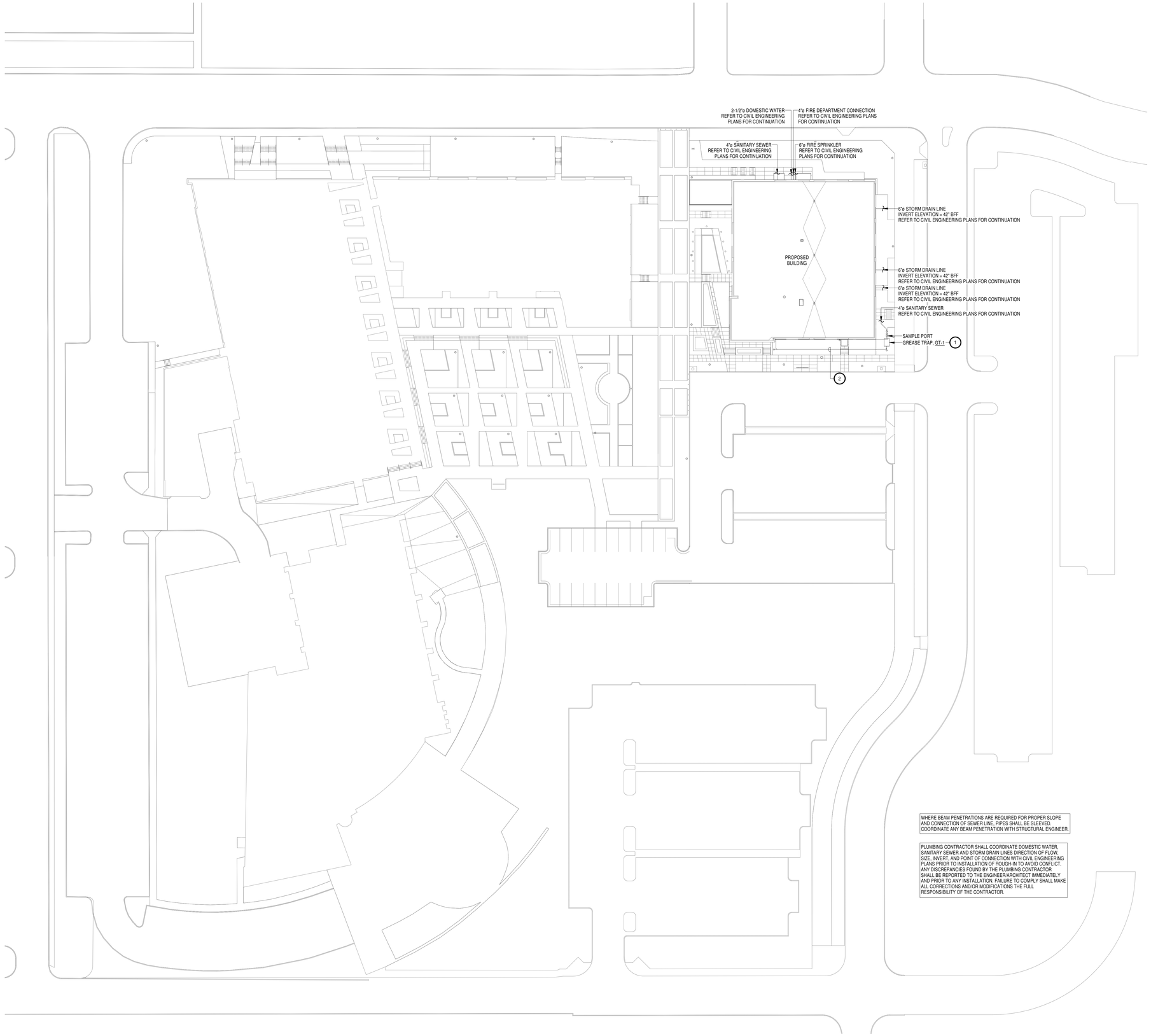

WHERE BEAM PENETRATIONS ARE REQUIRED FOR PROPER SLOPE AND CONNECTION OF SEWER LINE, PIPES SHALL BE SLEEVED. COORDINATE ANY BEAM PENETRATION WITH STRUCTURAL ENGINEER.

PLUMBING CONTRACTOR SHALL COORDINATE DOMESTIC WATER, SANITARY SEWER AND STORM DRAIN LINES DIRECTION OF FLOW, SIZE, INVERT, AND POINT OF CONNECTION WITH CIVIL ENGINEERING PLANS PRIOR TO INSTALLATION OF ROUGH-IN TO AVOID CONFLICT. ANY DISCREPANCIES FOUND BY THE PLUMBING CONTRACTOR SHALL BE REPORTED TO THE ENGINEER/ARCHITECT IMMEDIATELY AND PRIOR TO ANY INSTALLATION. FAILURE TO COMPLY SHALL MAKE ALL CORRECTIONS AND/OR MODIFICATIONS THE FULL RESPONSIBILITY OF THE CONTRACTOR.

TRUE NORTH
PLAN NORTH

1 PLUMBING SITE PLAN
1" = 30'-0"

GENERAL NOTES

A. REFER TO SHEET P-001 FOR PLUMBING GENERAL NOTES.

KEY NOTES

1	100 GALLON GREASE TRAP AND SAMPLE PORT SHALL BE PART OF ALTERNATE NO. 4.
2	GREASE WASTE PIPING BELOW FINISH FLOOR AND BELOW GRADE SHALL BE INSTALLED WITH HEAT TRACE SYSTEM (HTS-1) AND INSULATED WITH 1 INCH RIGID CELLULAR URETHANE. INSTALL HEAT TRACE SYSTEM AS PER MANUFACTURER RECOMMENDATIONS. COORDINATE ELECTRICAL REQUIREMENTS WITH ELECTRICAL CONTRACTOR PRIOR TO COMMENCEMENT OF WORK TO AVOID CONFLICT.

muñoz & company
1017 NORTH MAIN SUITE 300
SAN ANTONIO, TEXAS 78212
O. 210.349.1163 F. 210.525.1038
WWW.MUNOZ-CO.COM

HALFF
5000 WEST MILITARY, SUITE 100
McALLEN, TEXAS 78503
TEL (956) 664-0286
FAX (956) 664-0282
Halff Associates firm registration number is F-312

STATE OF TEXAS
HUGO H. AVILA
90071
LICENSED
PROFESSIONAL ENGINEER
11-8-18

UTRGV
The University of Texas Rio Grande Valley

UNIVERSITY OF TEXAS RIO GRANDE VALLEY
SCHOOL OF MEDICINE
TEAM BASED LEARNING CENTER
PROJECT NO: 903-1159
EDINBURG, TX
100% CONSTRUCTION DOCUMENTS

Issue/Revision

#	DESCRIPTION	DATE

Sheet Title
PLUMBING SITE PLAN

Date
NOVEMBER 08, 2018

Project Number	Drawn By	Checked By
33828	E.M.	H.A.

Sheet Number
P-101

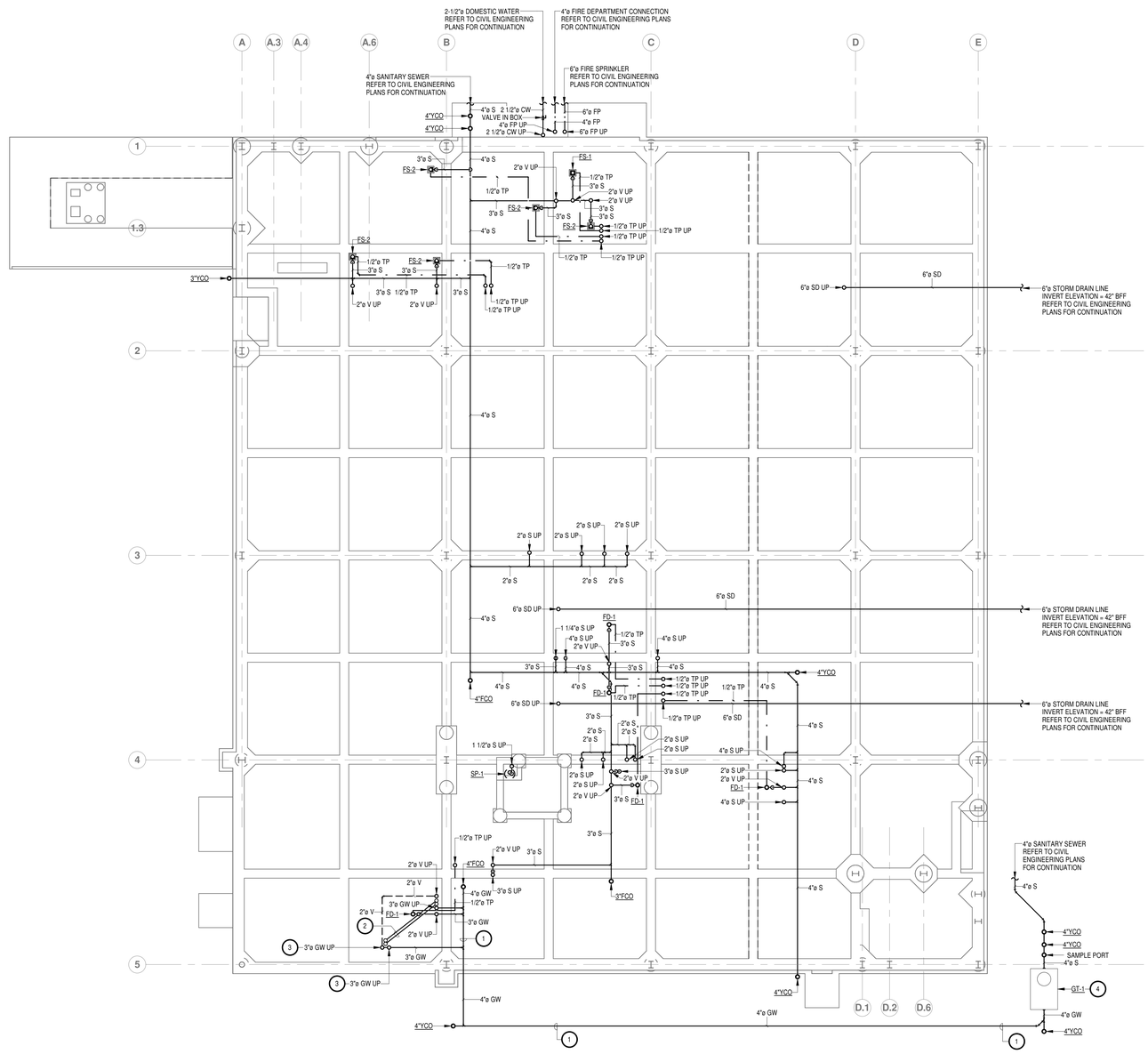

WHERE BEAM PENETRATIONS ARE REQUIRED FOR PROPER SLOPE AND CONNECTION OF SEWER LINE, PIPES SHALL BE SLEEVED. COORDINATE ANY BEAM PENETRATION WITH STRUCTURAL ENGINEER.

PLUMBING CONTRACTOR SHALL COORDINATE DOMESTIC WATER, SANITARY SEWER AND STORM DRAIN LINES DIRECTION OF FLOW, SIZE, INVERT, AND POINT OF CONNECTION WITH CIVIL ENGINEERING PLANS PRIOR TO INSTALLATION OF ROUGH-IN TO AVOID CONFLICT. ANY DISCREPANCIES FOUND BY THE PLUMBING CONTRACTOR SHALL BE REPORTED TO THE ENGINEER/ARCHITECT IMMEDIATELY AND PRIOR TO ANY INSTALLATION. FAILURE TO COMPLY SHALL MAKE ALL CORRECTIONS AND/OR MODIFICATIONS THE FULL RESPONSIBILITY OF THE CONTRACTOR.

TRUE NORTH
PLAN NORTH

1 PLUMBING PLAN - UNDERFLOOR

1/8" = 1'-0"

GENERAL NOTES

A. REFER TO SHEET P-001 FOR PLUMBING GENERAL NOTES.

KEY NOTES (#)

1	GREASE WASTE PIPING BELOW FINISH FLOOR AND BELOW GRADE SHALL BE INSTALLED WITH HEAT TRACE SYSTEM (HTS-1) AND INSULATED WITH 1 INCH RIGID CELLULAR URETHANE. INSTALL HEAT TRACE SYSTEM AS PER MANUFACTURER RECOMMENDATIONS. COORDINATE ELECTRICAL REQUIREMENTS WITH ELECTRICAL CONTRACTOR PRIOR TO COMMENCEMENT OF WORK TO AVOID CONFLICT.
2	PROVIDE AND INSTALL (2) TWO INCH PVC SLEEVES BLOW FINISH FLOOR WITH LONG RADIUS ELBOWS. PVC SLEEVES WILL SERVE TO INSTALL WATER PIPING TO FUTURE ISLAND SINK.
3	STUB UP AND CAP GREASE WASTE PIPING 36 INCHES ABOVE FINISH FLOOR FOR FUTURE ISLAND SINK.
4	100 GALLON GREASE TRAP AND SAMPLE PORT SHALL BE PART OF ALTERNATE NO. 4.

muñoz & company
1017 NORTH MAIN SUITE 300
SAN ANTONIO, TEXAS 78212
O. 210.349.1163 F. 210.525.1038
W W W . M U N O Z - C O . C O M

HALFF
5000 WEST MILITARY, SUITE 100
McALLEN, TEXAS 78503
TEL (956) 664-0286
FAX (956) 664-0282
Halff Associates firm registration number is F-312

STATE OF TEXAS
HUGO H. AVILA
90071
LICENSED
PROFESSIONAL ENGINEER
11-8-18

UTRGV
The University of Texas Rio Grande Valley

UNIVERSITY OF TEXAS RIO GRANDE VALLEY
SCHOOL OF MEDICINE
TEAM BASED LEARNING CENTER

PROJECT NO: 903-1159
EDINBURG, TX
100% CONSTRUCTION DOCUMENTS

Issue/Revision

#	DESCRIPTION	DATE

Sheet Title
PLUMBING UNDERFLOOR PLAN

Date
NOVEMBER 08, 2018

Project Number	Drawn By	Checked By
33828	E.M.	H.A.

Sheet Number
P-201

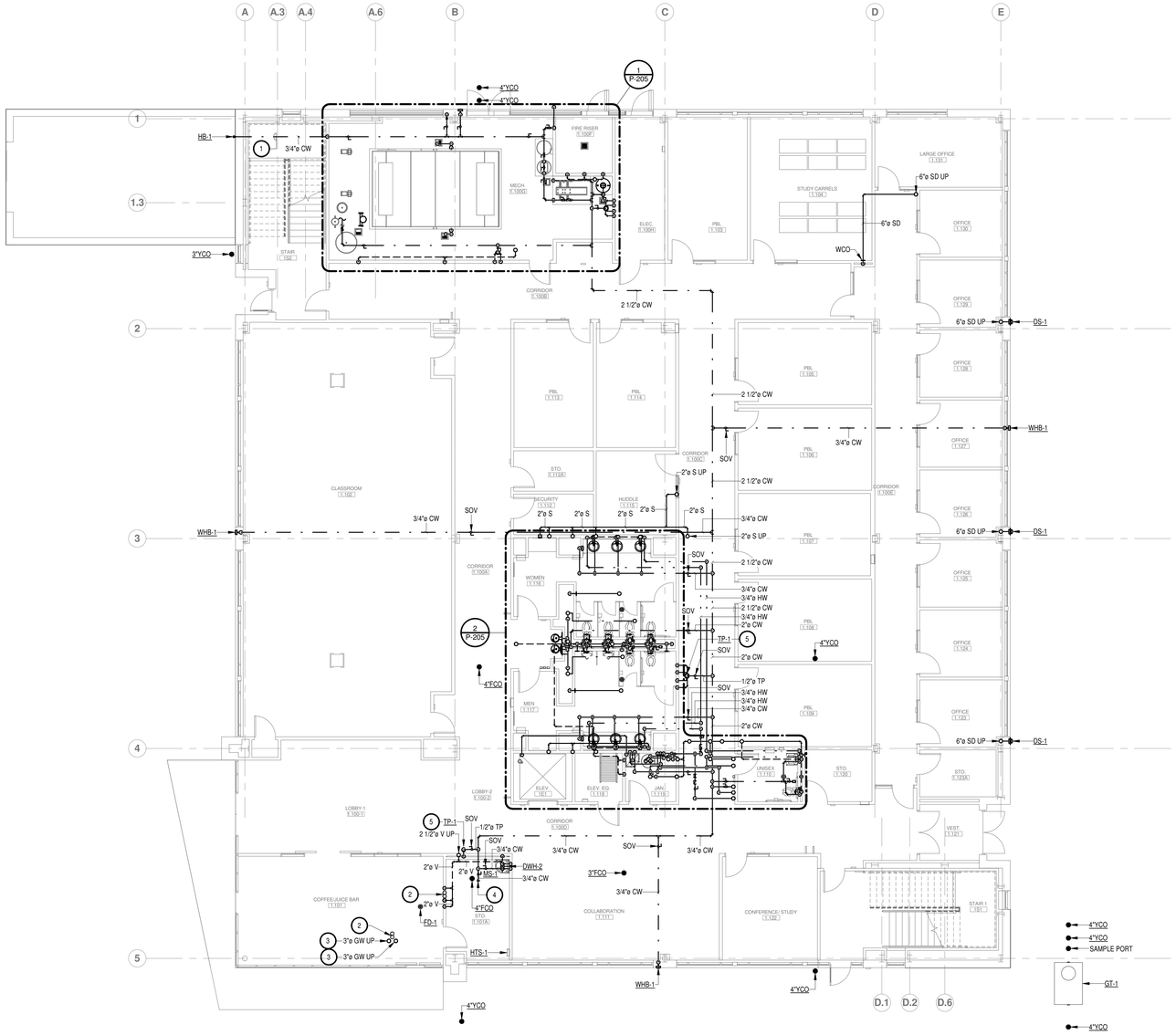

TRUE NORTH
PLAN NORTH

1 PLUMBING PLAN LEVEL 1
1/8" = 1'-0"

GENERAL NOTES

A. REFER TO SHEET P-001 FOR PLUMBING GENERAL NOTES.

KEY NOTES

1	ROUTE DOMESTIC WATER PIPING IN SPACE UNDER STAIR CASE. COORDINATE WITH ALL OTHER TRADES PRIOR OT INSTALLATION TO AVOID CONFLICT.
2	PROVIDE AND INSTALL (2) TWO INCH PVC SLEEVES BLOW FINISH FLOOR WITH LONG RADIUS ELBOWS. PVC SLEEVES WILL SERVE TO INSTALL WATER PIPING TO FUTURE ISLAND SINK.
3	STUB UP AND CAP GREASE WASTE PIPING 36 INCHES ABOVE FINISH FLOOR FOR FUTURE ISLAND SINK.
4	CAP DOMESTIC WATER PIPING ABOVE CEILING FOR FUTURE USE.
5	ELECTRONIC TRAP PRIMER VALVE ABOVE CEILING COMPLETE WITH DISTRIBUTION UNIT AND CONTROLLER MOUNTED ABOVE THE CEILING ON THE CLOSEST WALL. TRAP PRIMER AND CONTROLLER SHALL BE MOUNTED ACCESSIBLE FOR MAINTENANCE. CONNECT ELECTRONIC TRAP PRIMER VALVE SYSTEM TO ENERGY MANAGEMENT SYSTEM. COORDINATE ELECTRICAL REQUIREMENTS WITH ELECTRICAL CONTRACTOR PRIOR TO COMMENCEMENT OF WORK TO AVOID CONFLICT.

muñoz & company
1017 NORTH MAIN SUITE 300
SAN ANTONIO, TEXAS 78212
O. 210.349.1163 F. 210.525.1038
WWW.MUNOZ-CO.COM

HALFF
5000 WEST MILITARY, SUITE 100
McALLEN, TEXAS 78503
TEL (956) 664-0286
FAX (956) 664-0282
Halff Associates firm registration number is F-312

STATE OF TEXAS
HUGO H. AVILA
90071
LICENSED
PROFESSIONAL ENGINEER
11-8-18

UTRGV
The University of Texas Rio Grande Valley

UNIVERSITY OF TEXAS RIO GRANDE VALLEY
SCHOOL OF MEDICINE
TEAM BASED LEARNING CENTER
PROJECT NO: 903-1159
EDINBURG, TX
100% CONSTRUCTION DOCUMENTS

Issue/Revision

#	DESCRIPTION	DATE

Sheet Title
PLUMBING PLAN LEVEL 1

Date
NOVEMBER 08, 2018

Project Number	Drawn By	Checked By
33828	E.M.	H.A.

Sheet Number
P-202

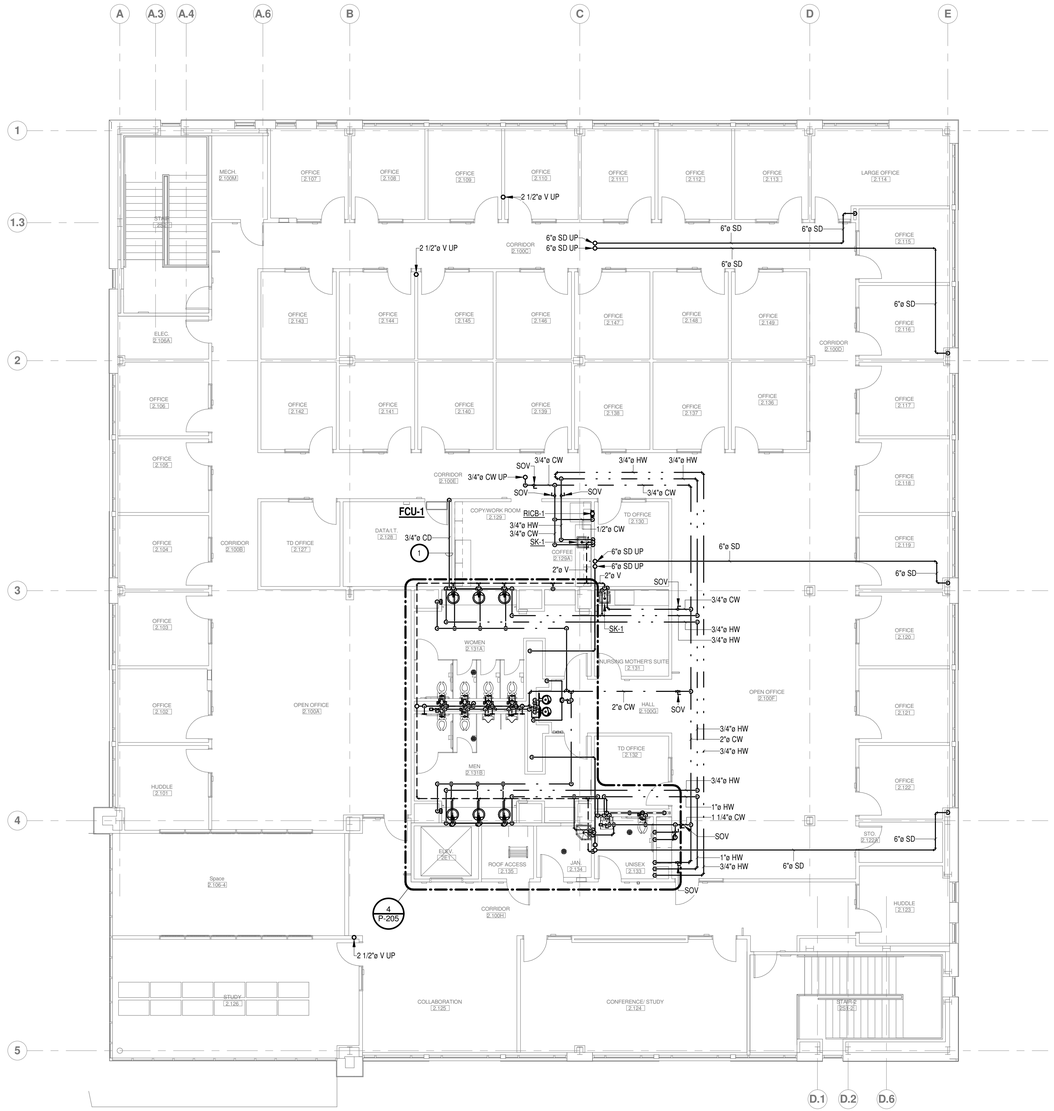

TRUE NORTH
PLAN NORTH

1 PLUMBING PLAN LEVEL 2
1/8" = 1'-0"

GENERAL NOTES

A. REFER TO SHEET P-001 FOR PLUMBING GENERAL NOTES.

KEY NOTES

1 ROUTE CONDENSATE DRAIN LINE CONCEALED FROM VIEW INSIDE WALLS AND CEILING SPACE AND CONNECT INTO LAVATORY P-TRAP TAIL PIECE DRAIN IN WOMENS 2.131A.

muñoz & company
1017 NORTH MAIN SUITE 300
SAN ANTONIO, TEXAS 78212
O. 210.349.1163 F. 210.525.1038
WWW.MUNOZ-CO.COM

HALFF
5000 WEST MILITARY, SUITE 100
McALLEN, TEXAS 78503
TEL (956) 664-0286
FAX (956) 664-0282
Halff Associates firm registration number is F-312

STATE OF TEXAS
HUGO H. AVILA
90071
LICENSED
PROFESSIONAL ENGINEER
11-8-18

UTRGV
The University of Texas Rio Grande Valley

UNIVERSITY OF TEXAS RIO GRANDE VALLEY
SCHOOL OF MEDICINE
TEAM BASED LEARNING CENTER
PROJECT NO: 903-1159
EDINBURG, TX
100% CONSTRUCTION DOCUMENTS

Issue/Revision

#	DESCRIPTION	DATE

Sheet Title
PLUMBING PLAN LEVEL 2

Date
NOVEMBER 08, 2018

Project Number	Drawn By	Checked By
33828	E.M.	H.A.

Sheet Number
P-203

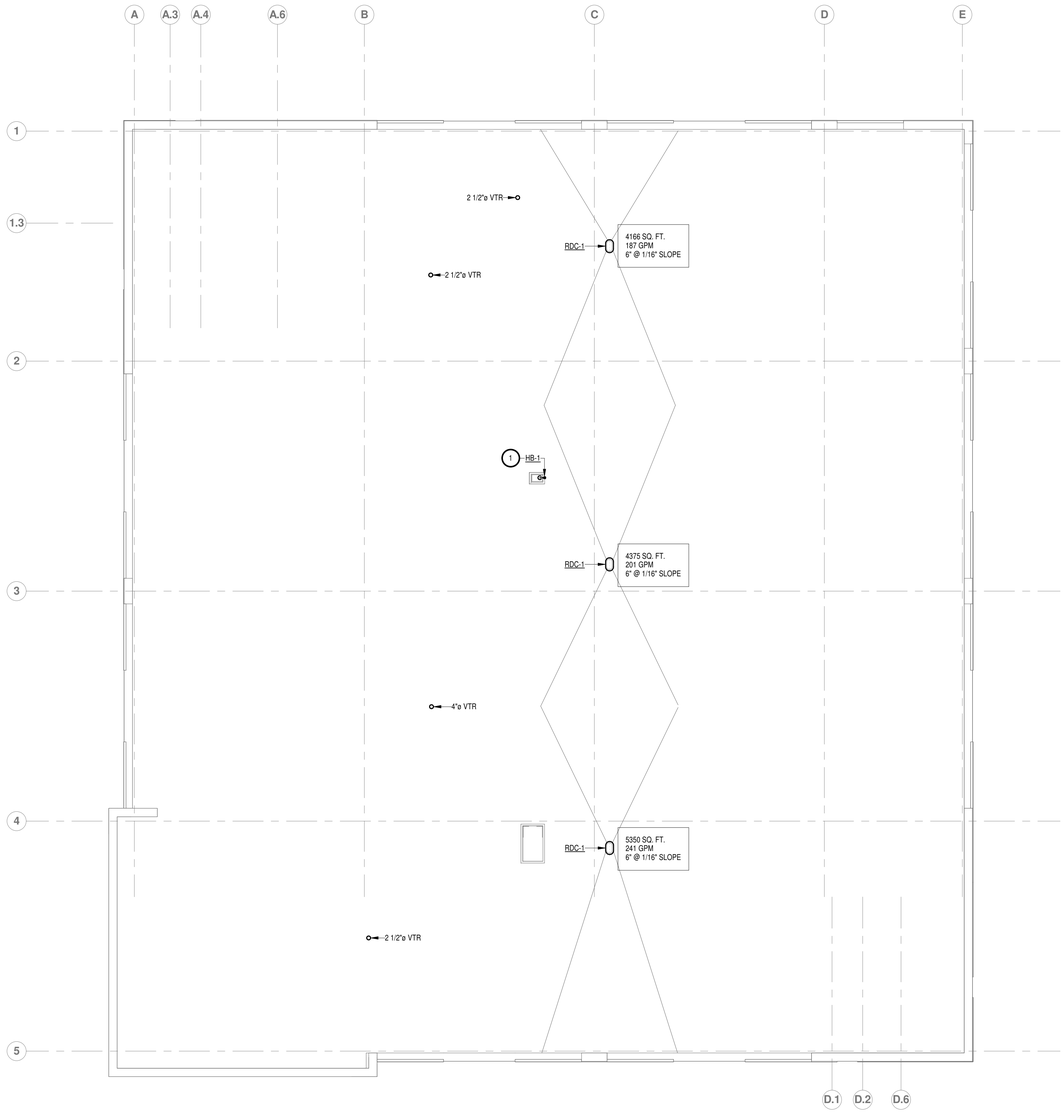

TRUE NORTH
PLAN NORTH

1 PLUMBING ROOF PLAN
1/8" = 1'-0"

GENERAL NOTES

A. REFER TO SHEET P-001 FOR PLUMBING GENERAL NOTES.

KEY NOTES

1 INSTALL HOSE BIB ON INSULATED CURB. REFER TO ARCHITECT PLANS FOR CURB DETAIL.

muñoz & company
1017 NORTH MAIN SUITE 300
SAN ANTONIO, TEXAS 78212
O. 210.349.1163 F. 210.525.1038
WWW.MUNOZ-CO.COM

HALFF
5000 WEST MILITARY, SUITE 100
McALLEN, TEXAS 78503
TEL (956) 664-0286
FAX (956) 664-0282
Halff Associates firm registration number is F-312

STATE OF TEXAS
HUGO H. AVILA
90071
LICENSED
PROFESSIONAL ENGINEER
11-8-18

UTRGV
The University of Texas Rio Grande Valley

UNIVERSITY OF TEXAS RIO GRANDE VALLEY
SCHOOL OF MEDICINE
TEAM BASED LEARNING CENTER
PROJECT NO: 903-1159
EDINBURG, TX
100% CONSTRUCTION DOCUMENTS

Issue/Revision

#	DESCRIPTION	DATE

Sheet Title
PLUMBING ROOF PLAN

Date
NOVEMBER 08, 2018

Project Number	Drawn By	Checked By
33828	E.M.	H.A.

Sheet Number
P-204

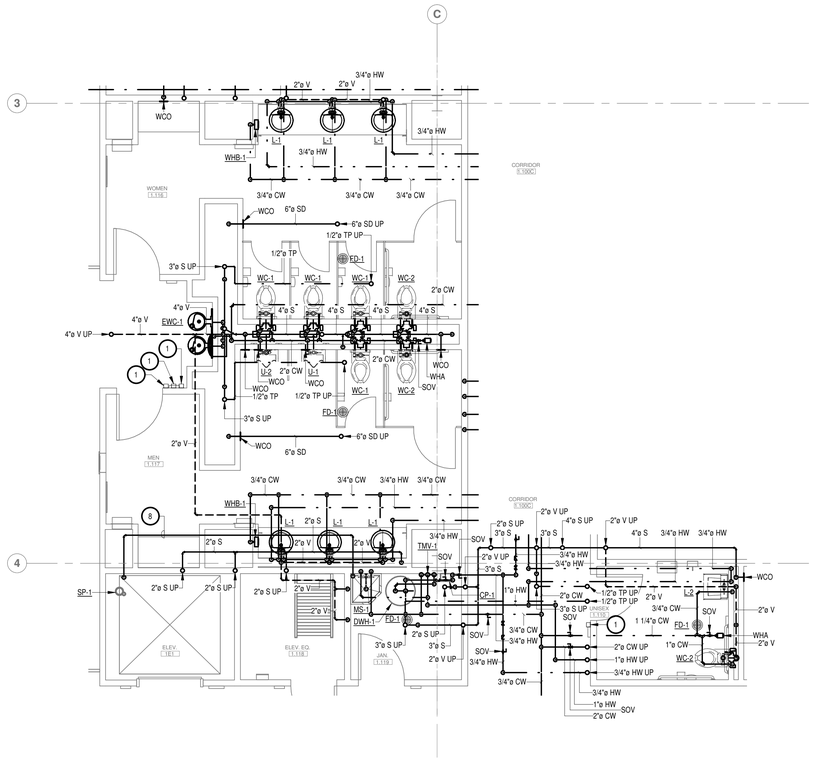

2 PLUMBING ENLARGED PLAN LEVEL 1 - WOMEN 1.116, MEN 1.117

1/4" = 1'-0"

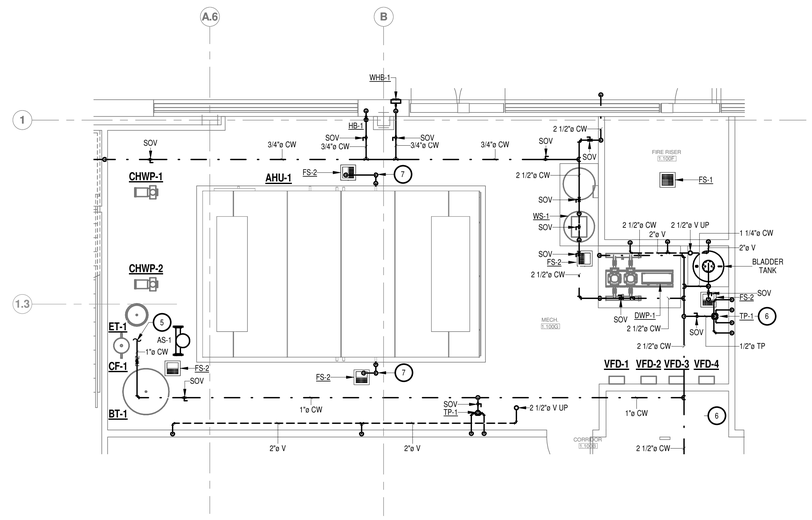

1 PLUMBING ENLARGED PLAN LEVEL 1 - MECH. 1.100G

1/4" = 1'-0"

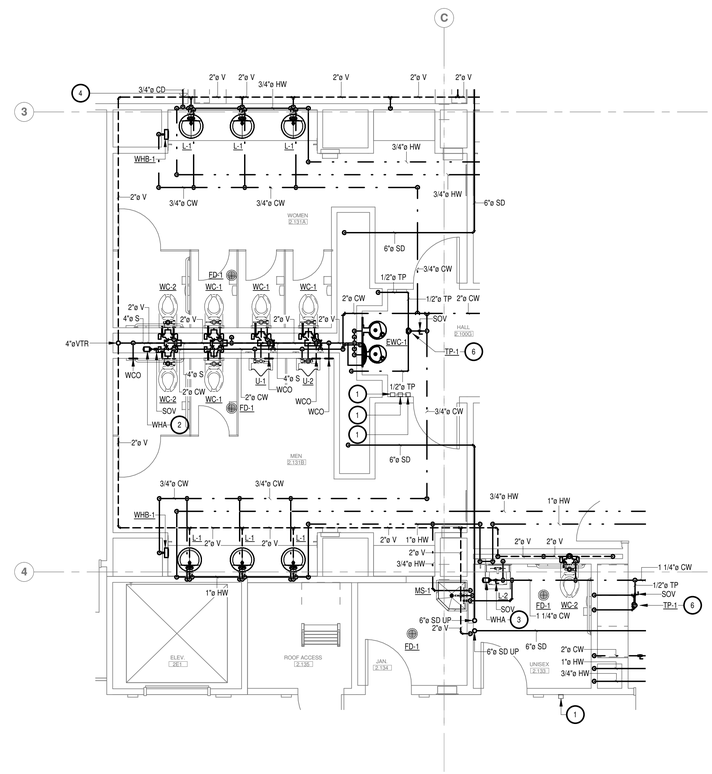

4 PLUMBING ENLARGED PLAN LEVEL 2 - WOMEN 2.129, MEN 2.128

1/4" = 1'-0"

GENERAL NOTES

A. REFER TO SHEET P-001 FOR PLUMBING GENERAL NOTES.

KEY NOTES

1	SENSOR FLUSH VALVE TRANSFORMERS (TF-1) ABOVE CEILING. PROVIDE ONE TRANSFORMER FOR EACH PLUMBING FIXTURE DESIGNATED WC-2 AND/OR U-2. PLUMBING CONTRACTOR SHALL COORDINATE FINAL ACCESSIBLE LOCATION AND ELECTRICAL REQUIREMENTS PRIOR TO COMMENCEMENT OF WORK TO AVOID CONFLICT. REFER TO ELECTRICAL POWER PLANS FOR ELECTRICAL REQUIREMENTS.
2	WATER HAMMER ARRESTOR IN CHASE. WHERE INACCESSIBLE PROVIDE AND INSTALL 12"X12" HINGED 16 GAUGE STEEL ACCESS PANEL WITH LOCKABLE KEYED DOOR. PRIME COATED WITH RUST INHIBITIVE ELECTROSTATIC POWDER, BAKED GREY ENAMEL AND SHALL BE PAINTED TO MATCH SURROUNDING AREAS. COORDINATE LOCATION TO AVOID CONFLICTS WITH PLUMBING FIXTURE(S), STALL PARTITION AND GRAB BARS.
3	WATER HAMMER ARRESTOR ABOVE CEILING. WHERE INACCESSIBLE PROVIDE AND INSTALL 12"X12" HINGED 16 GAUGE STEEL ACCESS PANEL WITH LOCKABLE KEYED DOOR. PRIME COATED WITH RUST INHIBITIVE ELECTROSTATIC POWDER, BAKED GREY ENAMEL AND SHALL BE PAINTED TO MATCH SURROUNDING AREAS. COORDINATE LOCATION TO AVOID CONFLICTS WITH LIGHT FIXTURES AND MECHANICAL EQUIPMENT ON CEILING.
4	ROUTE CONDENSATE DRAIN LINE CONCEALED FROM VIEW INSIDE WALLS AND CEILING SPACE AND CONNECT INTO LAVATORY P-TRAP TAIL PIECE DRAIN IN WOMENS 2.131A.
5	PROVIDE AND INSTALL MAKE-UP WATER LINE FOR CHILLED WATER SYSTEM WITH APPROVED REDUCE PRESSURE BACKFLOW PREVENTER. REFER TO MECHANICAL PLANS FOR FINAL POINT OF CONNECTION.
6	ELECTRONIC TRAP PRIMER VALVE ABOVE CEILING COMPLETE WITH DISTRIBUTION UNIT AND CONTROLLER MOUNTED ABOVE THE CEILING ON THE CLOSEST WALL. TRAP PRIMER AND CONTROLLER SHALL BE MOUNTED ACCESSIBLE FOR MAINTENANCE. CONNECT ELECTRONIC TRAP PRIMER VALVE SYSTEM TO ENERGY MANAGEMENT SYSTEM. COORDINATE ELECTRICAL REQUIREMENTS WITH ELECTRICAL CONTRACTOR PRIOR TO COMMENCEMENT OF WORK TO AVOID CONFLICT.
7	PROVIDE FULL SIZE INSULATED COPPER CONDENSATE DRAIN PIPE FOR AIR HANDLER. ROUTE AND DRAIN INDIRECTLY INTO NEAREST FLOOR SINK.
8	PROVIDE AND INSTALL 1-1/2" ELEVATOR SUMP PUMP DISCHARGE LINE. ROUTE LINE UP IN WALLS AND OVER TO MOP SINK IN ROOM JAN. 1.119. PROVIDE PIPE HANGER SUPPORTS MAXIMUM 5'-0" ON CENTER SPACING IN ATTIC SPACE. ROUTE AND DRAIN LINE INDIRECTLY INTO MOP SINK. CLAMP LINE SECURELY TO WALL.

muñoz & company
1017 NORTH MAIN SUITE 300
SAN ANTONIO, TEXAS 78212
O. 210.349.1163 F. 210.525.1038
W W W . M U N O Z - C O . C O M

HALFF
5000 WEST MILITARY, SUITE 100
McALLEN, TEXAS 78503
TEL (956) 664-0286
FAX (956) 664-0282
Halff Associates firm registration number is F-312

STATE OF TEXAS
HUGO H. AVILA
90071
LICENSED PROFESSIONAL ENGINEER
11-8-18

UTRGV
The University of Texas Rio Grande Valley

UNIVERSITY OF TEXAS RIO GRANDE VALLEY
SCHOOL OF MEDICINE
TEAM BASED LEARNING CENTER
PROJECT NO: 903-1159
EDINBURG, TX
100% CONSTRUCTION DOCUMENTS

Issue/Revision

#	DESCRIPTION	DATE

Sheet Title
PLUMBING ENLARGED PLANS

Date
NOVEMBER 08, 2018

Project Number	Drawn By	Checked By
33828	E.M.	H.A.

Sheet Number
P-205

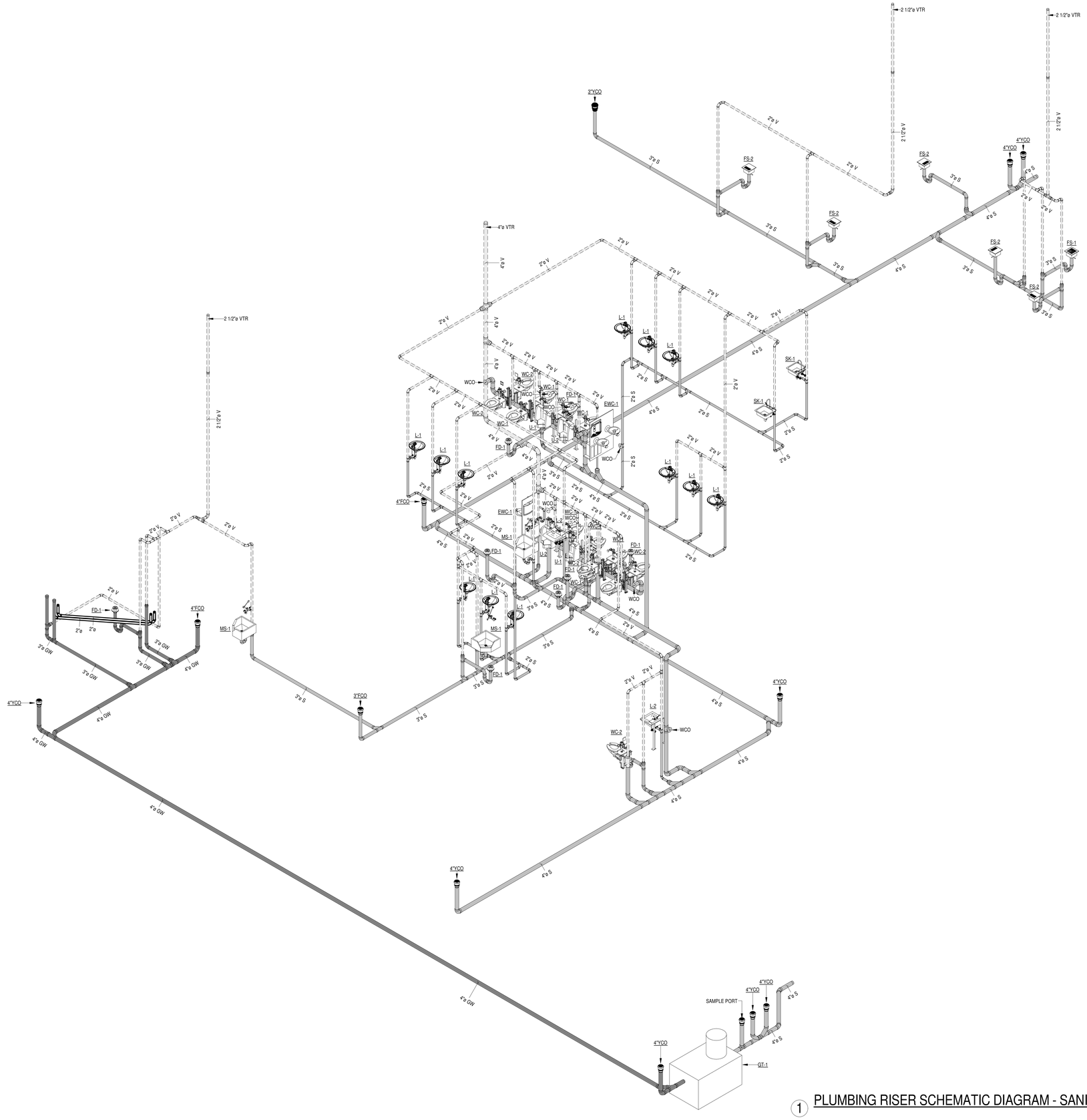

1 PLUMBING RISER SCHEMATIC DIAGRAM - SANITARY SEWER

muñoz & company
1017 NORTH MAIN SUITE 300
SAN ANTONIO, TEXAS 78212
O. 210.349.1163 F. 210.525.1038
W W W . M U N O Z - C O . C O M

HALFF
5000 WEST MILITARY, SUITE 100
McALLEN, TEXAS 78503
TEL (956) 664-0286
FAX (956) 664-0282
Halff Associates firm registration number is F-312

STATE OF TEXAS
HUGO H. AVILA
90071
LICENSED
PROFESSIONAL ENGINEER
11-8-18

UTRGV
The University of Texas Rio Grande Valley

UNIVERSITY OF TEXAS RIO GRANDE VALLEY
SCHOOL OF MEDICINE
TEAM BASED LEARNING CENTER
PROJECT NO: 903-1159
EDINBURG, TX
100% CONSTRUCTION DOCUMENTS

Issue/Revision

#	DESCRIPTION	DATE

Sheet Title
PLUMBING RISERS SCHEMATIC DIAGRAMS

Date
NOVEMBER 08, 2018

Project Number	Drawn By	Checked By
33828	E.M.	H.A.

Sheet Number
P-301

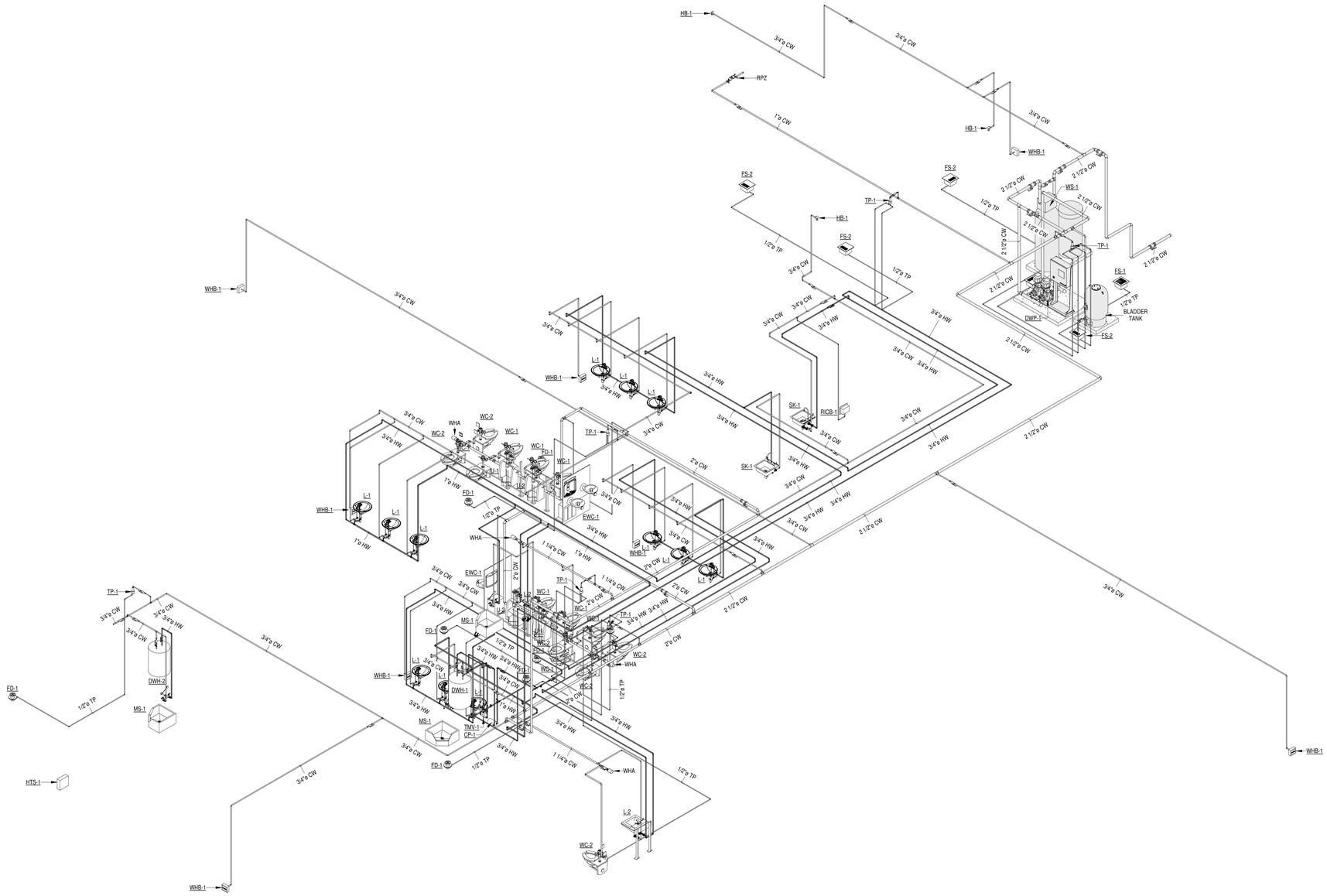

1 PLUMBING RISER SCHEMATIC DIAGRAM - DOMESTIC WATER

muñoz & company
1017 NORTH MAIN SUITE 300
SAN ANTONIO, TEXAS 78212
O. 210.349.1163 F. 210.525.1038
W W W . M U N O Z - C O . C O M

HALFF
5000 WEST MILITARY, SUITE 100
McALLEN, TEXAS 78503
TEL (956) 664-0286
FAX (956) 664-0282
Halff Associates firm registration number is F-312

STATE OF TEXAS
HUGO H. AVILA
90071
LICENSED
PROFESSIONAL ENGINEER
11-8-18

UTRGV
The University of Texas Rio Grande Valley

UNIVERSITY OF TEXAS RIO GRANDE VALLEY
SCHOOL OF MEDICINE
TEAM BASED LEARNING CENTER

PROJECT NO: 903-1159
EDINBURG, TX
100% CONSTRUCTION DOCUMENTS

Issue/Revision

#	DESCRIPTION	DATE

Sheet Title
PLUMBING RISERS SCHEMATIC DIAGRAMS

Date
NOVEMBER 08, 2018

Project Number	Drawn By	Checked By
33828	E.M.	H.A.

Sheet Number
P-302

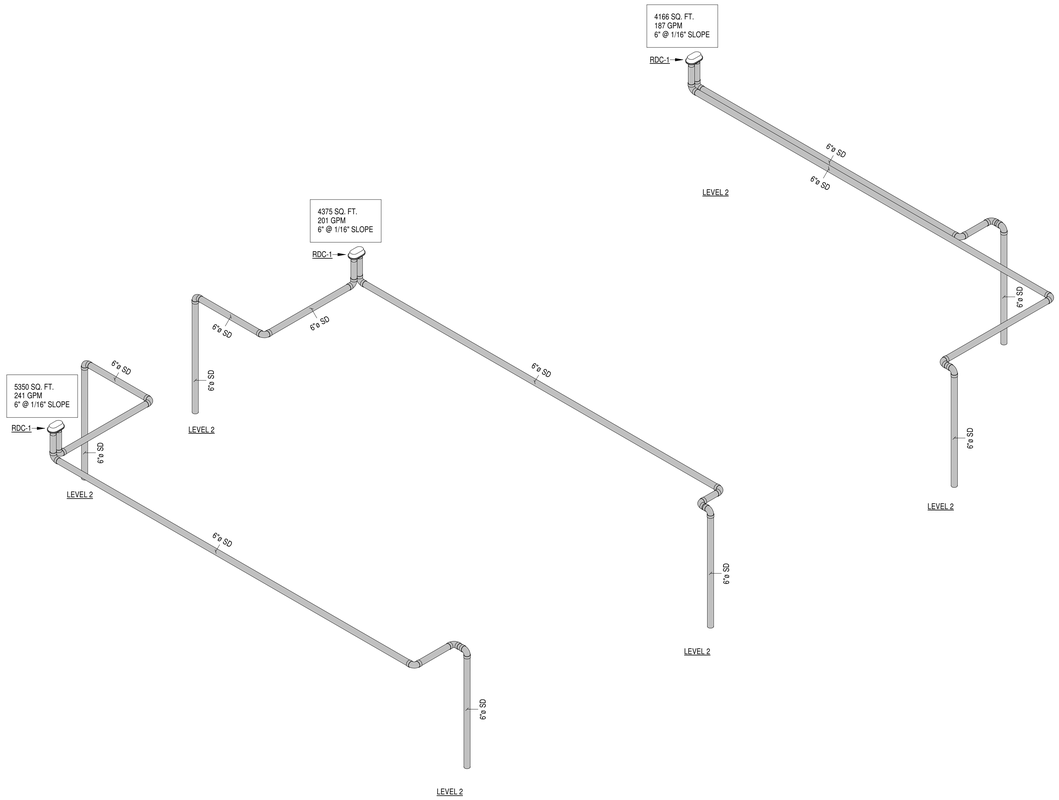

2 PLUMBING RISER SCHEMATIC DIAGRAM - STORM - LEVEL 2

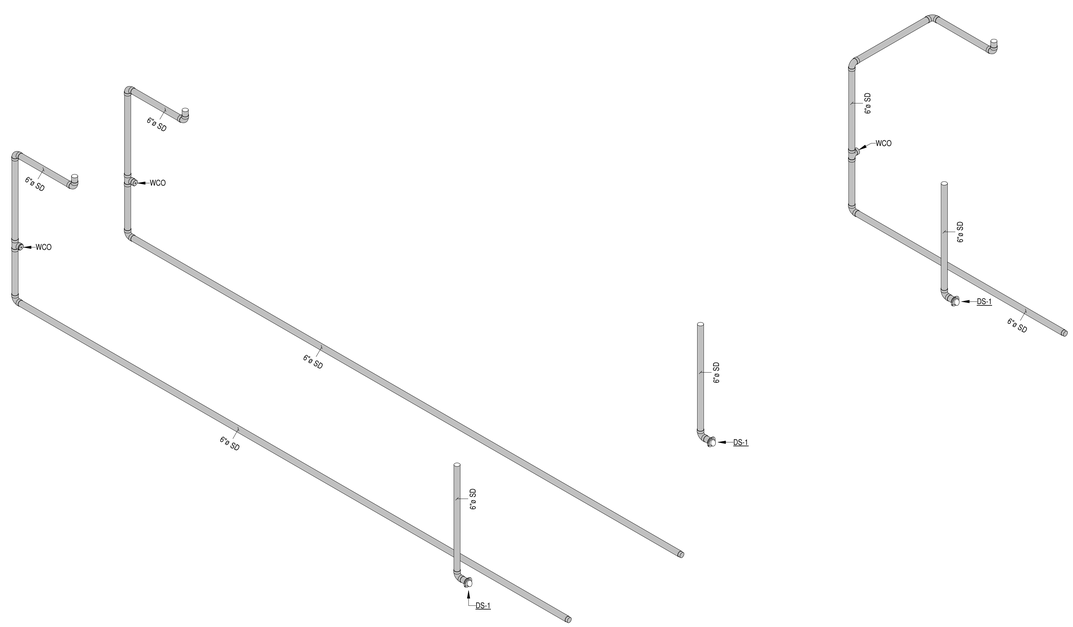

1 PLUMBING RISER SCHEMATIC DIAGRAM - STORM - LEVEL 1

muñoz & company
1017 NORTH MAIN SUITE 300
SAN ANTONIO, TEXAS 78212
O. 210.349.1163 F. 210.525.1038
W W W . M U N O Z - C O . C O M

HALFF
5000 WEST MILITARY, SUITE 100
McALLEN, TEXAS 78503
TEL (956) 664-0286
FAX (956) 664-0282
Halff Associates firm registration number is F-312

STATE OF TEXAS
HUGO H. AVILA
90071
LICENSED
PROFESSIONAL ENGINEER
11-8-18

UTRGV
The University of Texas Rio Grande Valley

UNIVERSITY OF TEXAS RIO GRANDE VALLEY
SCHOOL OF MEDICINE
TEAM BASED LEARNING CENTER
PROJECT NO: 903-1159
EDINBURG, TX
100% CONSTRUCTION DOCUMENTS

Issue/Revision

#	DESCRIPTION	DATE

Sheet Title
PLUMBING RISERS
SCHEMATIC DIAGRAMS

Date
NOVEMBER 08, 2018

Project Number	Drawn By	Checked By
33828	E.M.	H.A.

Sheet Number
P-303

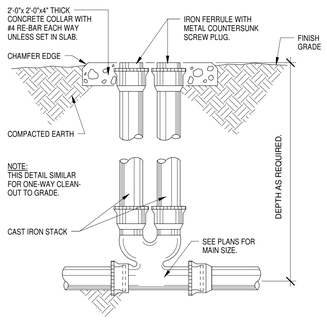

1 DOUBLE CLEANOUT DETAIL
N.T.S.

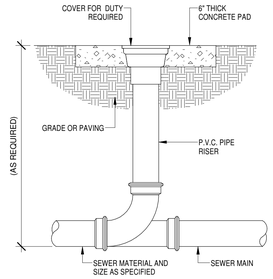

2 EXTERIOR CLEAN OUT DETAIL
N.T.S.

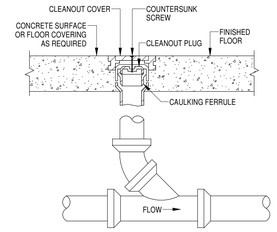

3 FLOOR CLEAN OUT DETAIL
N.T.S.

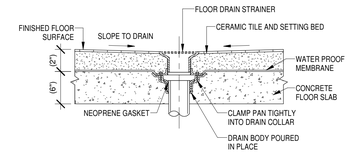

4 OPEN AREA FLOOR DRAIN DETAIL
N.T.S.

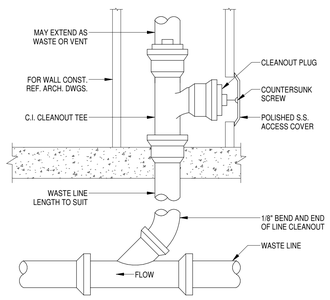

5 WALL CLEAN OUT DETAIL
N.T.S.

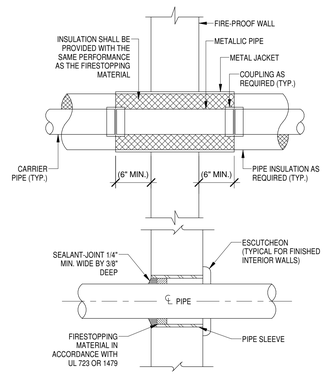

6 TYPICAL FIRE PROOF & WALL PENETRATION
N.T.S.

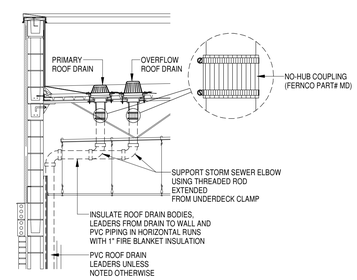

7 ROOF AND OVERFLOW INSTALLATION DETAIL
N.T.S.

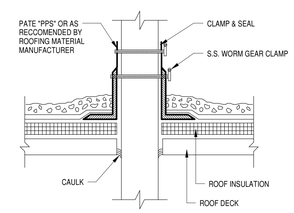

8 PIPE FLASHING DETAIL
N.T.S.

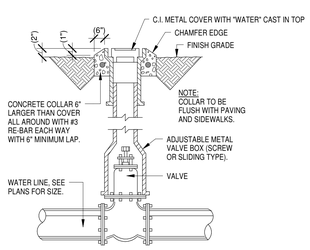

9 VALVE IN BOX DETAIL
N.T.S.

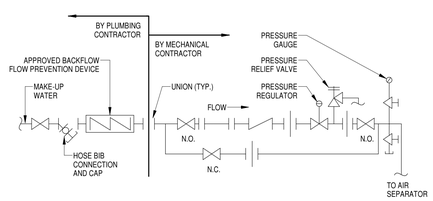

10 MAKE-UP WATER SPOOL
N.T.S.

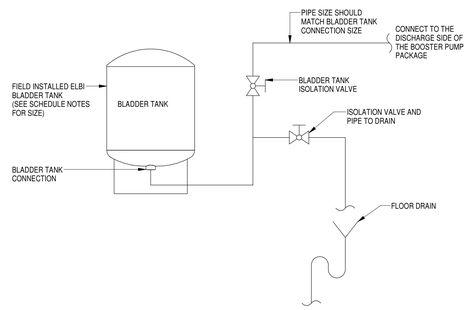

11 MAKE-UP WATER SPOOL
N.T.S.

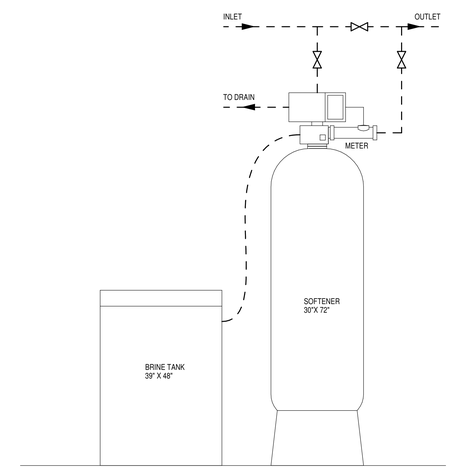

12 WATER SOFTENER PIPING DIAGRAM
N.T.S.

muñoz & company
1017 NORTH MAIN SUITE 300
SAN ANTONIO, TEXAS 78212
O. 210.349.1163 F. 210.525.1038
W W W . M U N O Z - C O . C O M

HALFF
5000 WEST MILITARY, SUITE 100
McALLEN, TEXAS 78503
TEL (956) 664-0286
FAX (956) 664-0282
Halff Associates firm registration number is F-312

STATE OF TEXAS
HUGO H. AVILA
90071
LICENSED
PROFESSIONAL ENGINEER
11-8-18

UTRGV
The University of Texas Rio Grande Valley

UNIVERSITY OF TEXAS RIO GRANDE VALLEY
SCHOOL OF MEDICINE
TEAM BASED LEARNING CENTER
PROJECT NO: 903-1159
EDINBURG, TX
100% CONSTRUCTION DOCUMENTS

Issue/Revision

#	DESCRIPTION	DATE

Sheet Title
PLUMBING DETAILS

Date
NOVEMBER 08, 2018

Project Number	Drawn By	Checked By
33828	E.M.	H.A.

Sheet Number
P-304

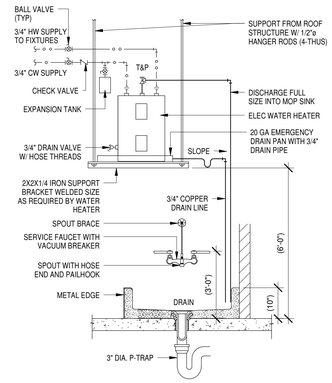

1 WATER HEATER ON PLATFORM MOUNTING DETAIL
N.T.S.

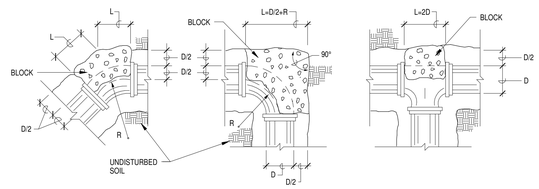

2 THRUST BLOCK DETAIL
N.T.S.

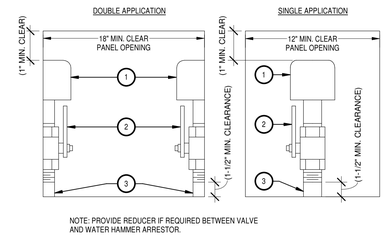

NOTE: PROVIDE REDUCER IF REQUIRED BETWEEN VALVE AND WATER HAMMER ARRESTOR.

KEY NOTES: (1)

1. WATER HAMMER ARRESTOR.
2. BALL VALVE, SAME NOMINAL SIZE AS PIPE BRANCH IN CHASE. OPENING IN BALL VALVE TO MATCH PIPE I.D.
3. PIPE SAME SIZE AS BRANCH IN CHASE TO WHICH IT IS ATTACHED.

3 TYPICAL WATER HAMMER PANEL INSTALLATION
N.T.S.

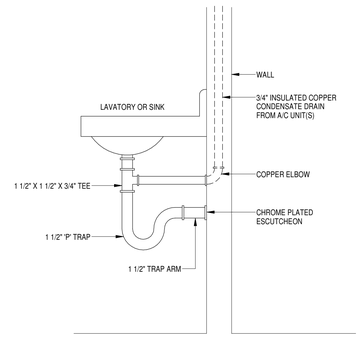

4 CONDENSATE TO LAVATORY TAILPIECE DETAIL
N.T.S.

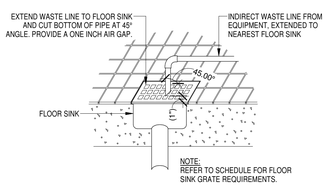

5 INDIRECT WASTE LINE DETAIL
N.T.S.

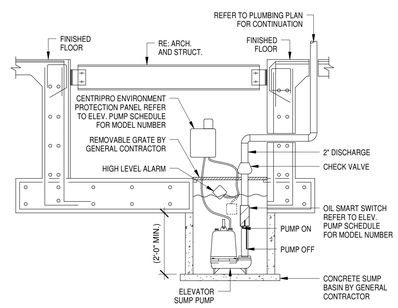

NOTE:
1. ELEVATOR PUMP SHALL OPERATE AUTOMATICALLY WITHOUT HUMAN INTERVENTION.
2. ELEVATOR SUMP BASIN SHALL BE INSTALLED ON OPPOSITE SIDE OF ELEVATOR DOORS AWAY FROM ACCESS LADDER.

6 ELEVATOR PIT SUMP PUMP DETAIL
N.T.S.

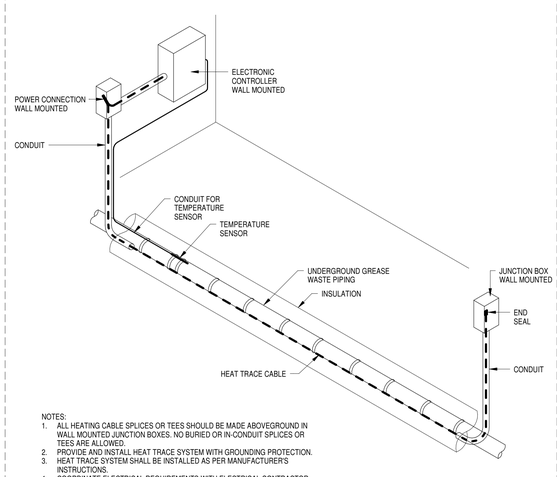

NOTES:
1. ALL HEATING CABLE SPLICES OR TEES SHOULD BE MADE ABOVEGROUND IN WALL MOUNTED JUNCTION BOXES. NO BURIED OR IN-CONDUIT SPLICES OR TEES ARE ALLOWED.
2. PROVIDE AND INSTALL HEAT TRACE SYSTEM WITH GROUNDING PROTECTION.
3. HEAT TRACE SYSTEM SHALL BE INSTALLED AS PER MANUFACTURER'S INSTRUCTIONS.
4. COORDINATE ELECTRICAL REQUIREMENTS WITH ELECTRICAL CONTRACTOR PRIOR TO COMMENCEMENT OF WORK TO AVOID CONFLICT.

7 GREASE WASTE PIPING HEAT TRACE DETAIL
N.T.S.

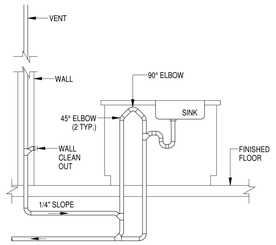

8 ISLAND SINK VENTING DETAIL
N.T.S.

muñoz & company
1017 NORTH MAIN SUITE 300
SAN ANTONIO, TEXAS 78212
O. 210.349.1163 F. 210.525.1038
WWW.MUNOZ-CO.COM

HALFF
5000 WEST MILITARY, SUITE 100
McALLEN, TEXAS 78503
TEL (956) 664-0286
FAX (956) 664-0282
Halff Associates firm registration number is F-312

STATE OF TEXAS
HUGO H. AVILA
90071
LICENSED PROFESSIONAL ENGINEER
11-8-18

UTRGV
The University of Texas Rio Grande Valley

UNIVERSITY OF TEXAS RIO GRANDE VALLEY
SCHOOL OF MEDICINE
TEAM BASED LEARNING CENTER
PROJECT NO: 903-1159
EDINBURG, TX
100% CONSTRUCTION DOCUMENTS

Issue/Revision

#	DESCRIPTION	DATE

Sheet Title
PLUMBING DETAILS

Date
NOVEMBER 08, 2018

Project Number	Drawn By	Checked By
33828	E.M.	H.A.

Sheet Number
P-305

DOMESTIC WATER BOOSTER PUMP SCHEDULE

MARK	LOCATION ROOM NAME	LOCATION ROOM #	TYPE	FLUID FLOW RATE GPM (EACH PUMP)	FLUID FLOW RATE GPM (TOTAL PUMP)	FLUID HEAD (FT)	NUMBER OF MOTORS/SIZE (-HP)	NOMINAL RPM	V/PH/HZ	CONNECTIONS SUCTION	CONNECTIONS DISCHARGE	MANUFACTURER	MODEL	NOTES
DWP-1	MECH.	1.100G	VERTICAL MULTI-STAGE	45'	90	45'	2 @ 1.5HP	3500	480/3/60	4"	4"	GRUNDFOS BOOSTERPAQ	MPC-E 2CRNE 10-2	ALL

NOTES:
1. PROVIDE INTEGRAL VFD ON EACH PUMP OR IF EXTERNAL DRIVES THEY SHALL BE CONTAINED WITHIN A SINGLE ELECTRICAL ENCLOSURE (MIN. NEMA 3R UNLESS NOTED OTHERWISE), PANEL SHALL HAVE MAIN DISCONNECT AND SINGLE POINT CONNECTION.
2. PROVIDE REDUNDANT DISCHARGE PRESSURE TRANSDUCER AND CONTROL CAPABILITY TO MONITOR BOTH SENSOR AND AUTOMATICALLY SWITCH TO SECONDARY SENSOR IN THE EVENT OF A PRIMARY SENSOR FAILURE
3. PROVIDE SURGE PROTECTION, BATTERY BACKUP, SERVICE DISCONNECTS, INDIVIDUAL PUMP RUN INDICATION, AUDIBLE & VISUAL ALARM, BACNET COMMUNICATION INTERFACE.
4. HEADERS SHALL BE CONSTRUCTED OF 316 SS WITH FLANGED CONNECTIONS ON ALL ENDS. PROVIDE SUCTION & DISCHARGE ISOLATION VALVES AND DISCHARGE CHECK VALVES ON EACH PUMP.
5. CONTRACTOR TO ROUTE A PIPE OFF THE SYSTEM DISCHARGE LINE TO THE BLADDER TANK PROVIDING A BLOCK & BLEED PIPING ARRANGEMENT THAT ALLOWS THE TANK TO BE ISOLATED FROM THE SYSTEM AND DRAINED.
6. BLADDER TANK SHALL BE EQUAL TO TOP-PROTECTOR MODEL #DWT-200V.
7. WHEN REQUIRED, SYSTEM SUPPLIER TO PROVIDE 150# FLANGED X 150# FLANGED REDUCING FLEX CONNECTORS, OF ALL STAINLESS STEEL CONSTRUCTION (RE: PLANS FOR PIPE CONNECTION SIZES).
8. PUMP AND HEADERS SHALL BE STAINLESS STEEL CONSTRUCTION.
9. INSTALL DOMESTIC BOOSTER PUMP WITH SHAFT GROUNDING.

ELECTRIC WATER HEATER SCHEDULE

MARK	LOCATION ROOM NAME	LOCATION ROOM #	STORAGE GALLONS	RECOVERY G.P.H.	DEGREE RISE	WATER TEMP. LEAVING	WATER INLET	WATER OUTLET	WATTS	VOLTAGE	PHASE	MANUFACTURER	MODEL	NOTES
DWH-1	JAN.	1.119	40 GAL.	18	100 °F	120 °F	3/4"	3/4"	4500 W	208 V	1	RHEEM	ELDS40	ALL
DWH-2	STO.	1.101A	30 GAL.	18	100 °F	120 °F	3/4"	3/4"	4500 W	208 V	1	RHEEM	ELDS 30	ALL

NOTES:
1. PROVIDE AND INSTALL EXPANSION TANK AS PER MANUFACTURER'S RECOMMENDATION.
2. PROVIDE SHUT-OFF VALVES ON EXPANSION TANK INLET PIPING.
3. PROVIDE SHUT-OFF VALVES ON WATER HEATER INLET AND OUTLET PIPING.

CIRCULATING PUMP SCHEDULE

MARK	LOCATION ROOM NAME	LOCATION ROOM #	MFR	MODEL	RPM	HP	GPM	WATTS	V/PH/HZ	NOTES
CP-1	JAN.	1.119	BELL & GOSSETT	SERIES PR	1725	1/6	-	219	115/1/60	ALL

NOTES:
1. LEAD FREE BRONZE CONSTRUCTION WITH MAXIMUM WORKING PRESSURE OF 150 PSI AND MAXIMUM OPERATING TEMPERATURE OF 225°F.
2. PROVIDE SHUT-OFF VALVES ON INLET AND OUTLET PIPING.
3. PUMP CONTROLS SHALL BE ELECTRIC PROGRAMMABLE, SEVEN DAY CLOCK WITH MANUAL OVERRIDE ON-OFF SWITCH.

ELEVATOR SUMP PUMP SCHEDULE

MARK	LOCATION ROOM NAME	LOCATION ROOM #	MFR	MODEL	RPM	HP	GPM	WATTS	V/PH/HZ	NOTES
SP-1	ELEV.	1E1	BELL & GOSSETT	2EC0511	3500	1/2	50	1667	115/1/60	ALL

NOTES:
1. PUMP IS PART OF ELEVATOR SUMP KIT EQUAL TO CENTRIPRO MODEL #ELKT2EC0511.
2. ELEVATOR SUMP KIT SHALL INCLUDE OIL SMART SIMPLEX PANEL, LIQUID SMART SENSOR, OIL SMART PUMP SWITCH AND PUMP.

WATER SOFTENER SCHEDULE

MARK	LOCATION ROOM NAME	LOCATION ROOM #	FLOW RATE	MFR	MODEL	NOTES
WS-1	MECH.	1.100G	75GPM	FLECK	140-29-450-S-4M-4M	ALL

NOTES:
1. PROVIDE 120 VOLT POWER CONNECTION.
2. 2" INLET AND 2" OUTLET
3. INSTALL AS PER MANUFACTURER RECOMMENDATIONS.

PLUMBING FIXTURE SCHEDULE

MARK	FIXTURE TYPE	CONNECTIONS S	CONNECTIONS V	CONNECTIONS CW	CONNECTIONS HW	DESCRIPTION
HB-1	HOSE BIB	-	-	3/4"	-	WALL MOUNTED FAUCET SHALL BE EQUAL TO WOODFORD MODEL #26-P CHROME FINISH, WITH BACK FLOW PREVENTER, AND LOOSE TEE KEY.
WC-1	WATER CLOSET WALL-MOUNTED	4"	2"	1"	-	VITREOUS CHINA, ELONGATED RIM, SIPHON JET ACTION, WALL MOUNTED WATER CLOSET WITH 1-1/2" TOP SPUD, 1.28GPF, EQUAL TO KOHLER "KINGSTON" MODEL #K-4325-0. COMPLETE WITH LOW CONSUMPTION EXPOSED FLUSH VALVE SLOAN "ROYAL" MODEL #111-1.28, CHURCH MODEL #9500C OPEN FRONT SEAT LESS COVER AND APPROVED CARRIER SYSTEM.
WC-2	WATER CLOSET WALL-MOUNTED (HANDICAP)	4"	2"	1"	-	VITREOUS CHINA, ELONGATED RIM, SIPHON JET ACTION, WALL MOUNTED WATER CLOSET WITH 1-1/2" TOP SPUD, 1.28GPF, EQUAL TO KOHLER "KINGSTON" MODEL #K-4325-0. COMPLETE WITH LOW CONSUMPTION SENSOR EXPOSED FLUSH VALVE SLOAN "OPTIMA" MODEL # 111-1.28-ES-S-TMO WITH TRUE MECHANICAL OVERRIDE AND CHURCH MODEL #9500C OPEN FRONT SEAT LESS COVER AND APPROVED CARRIER SYSTEM.
U-1	URINAL	2"	2"	3/4"	-	VITREOUS CHINA, WALL HUNG, WASHOUT WITH 3/4" TOP SPUD URINAL EQUAL TO KOHLER "BARDON" MODEL #K-4991-ET, MINIMUM 14" RIM TO WALL DISTANCE, WALL HANGERS. COMPLETE WITH LOW CONSUMPTION EXPOSED FLUSH VALVE SLOAN "OPTIMA" MODEL #186-1.28 AND APPROVED CARRIER SYSTEM.
U-2	URINAL (HANDICAP)	2"	2"	3/4"	-	VITREOUS CHINA, WALL HUNG, WASHOUT WITH 3/4" TOP SPUD URINAL EQUAL TO KOHLER "BARDON" MODEL #K-4991-ET, MINIMUM 14" RIM TO WALL DISTANCE, WALL HANGERS. COMPLETE WITH LOW CONSUMPTION SENSOR EXPOSED FLUSH VALVE SLOAN "OPTIMA" MODEL #186-1.28-ES-S-TMO WITH TRUE MECHANICAL OVERRIDE AND APPROVED CARRIER SYSTEM.
TF-1	FLUSH VALVE TRANSFORMER	-	-	-	-	FLUSH VALVE TRANSFORMER EQUAL TO SLOAN MODEL #EL-154, 24VAC, 50/60 HZ.
L-1	LAVATORY SELF-RIMMING (HANDICAP)	1-1/2"	1-1/2"	3/4"	3/4"	VITREOUS CHINA, 20-1/4" X 17-1/2", SELF RIMMING, 8" CENTERS, OVAL LAVATORY EQUAL TO KOHLER "PENNINGTON" MODEL #K-2196-8. COMPLETE WITH CHROME PLATED DECK MOUNTED FAUCET WITH 1/2"IPS CONNECTIONS, WRIST BLADE HANDLES, 0.5GPM, VANDAL RESISTANT AERATOR EQUAL TO MOEN FAUCET MODEL #8228F05. PROVIDE OFFSET TAILPIECE, GRID STRAINER, ANGLE STOPS, SUPPLY-LOOSE KEY, CHROME PLATED P- TRAP WITH CLEANOUT AND PROTECTIVE COVERING.
L-2	LAVATORY WALL-MOUNTED (HANDICAP)	1-1/2"	1-1/2"	3/4"	1/2"	VITREOUS CHINA, 20" X 18-1/4", WALL MOUNTED, 8" CENTERS, LAVATORY EQUAL TO KOHLER "CHESAPEAKE" MODEL #K-1723-0. COMPLETE WITH CHROME PLATED DECK MOUNTED FAUCET WITH 1/2"IPS CONNECTIONS, WRIST BLADE HANDLES, 0.5GPM, VANDAL RESISTANT AERATOR EQUAL TO MOEN FAUCET MODEL #8228F05. PROVIDE OFFSET TAILPIECE, GRID STRAINER, ANGLE STOPS, SUPPLY-LOOSE KEY, CHROME PLATED P- TRAP WITH CLEANOUT, PROTECTIVE COVERING AND APPROVED CARRIER SYSTEM.
SK-1	SINK SELF-RIMMING (HANDICAP)	1-1/2"	1-1/2"	3/4"	3/4"	SINGLE COMPARTMENT, STAINLESS STEEL SINK EQUAL TO MOEN MODEL #G20457SBQ. SELF RIMMING, 17-5/16"X22-5/16"X6-1/2", 3 HOLE ON 4" CENTERS, 20 GAUGE, SOUND SHIELD. COMPLETE WITH MOEN MODEL #7906.8" GOOSENECK, 1.5GPM AERATOR, LEVER HANDLES, CONCEALED MOUNT FAUCET, STRAINER WITH BASKET, OFFSET P-TRAP AND PROTECTIVE COVERS.
MS-1	MOP SINK	2"	2"	3/4"	3/4"	FLOOR-MOUNTED TERRAZZO CORNER SERVICE SINK EQUAL TO STERN-WILLIAMS MODEL #SBC-1700-BP. 24"X24"X12" WITH 6" DROP FRONT WITH STAINLESS STEEL CAP. COMPLETE WITH STAINLESS STEEL BACK PANELS MODEL #BP. SERVICE SINK FAUCET MODEL #T-10-VB WITH 8" CENTERS, PAIL HOOK, WALL BRACKET, VACUUM BREAKER SPOUT, AND LEVER HANDLES. MOP HANGER MODEL #T-40 AND 5' REINFORCED RUBBER HOSE MODEL #T-35.
EWC-1	ELECTRIC WATER COOLER BI-LEVEL (HANDICAP)	1-1/2"	1-1/2"	3/4"	-	BI-LEVEL, STAINLESS STEEL, FILTERED WATER COOLER WITH HANDS FREE BOTTLE FILLING STATION EQUAL TO ELKAY MODEL #LZWS-LRPBM29K, STAINLESS STEEL BASINS, FLEX-GUARD BUBBLERS WALL MOUNTING FRAME. RECESSED IN THE WALL REFRIGERATION SYSTEM, CAPABLE OF DELIVERING 8.0GPH OF 50°F WATER WITH 80°F INLET AND 90°F ROOM TEMPERATURE.
HB-1	HOSE BIB	-	-	3/4"	-	WALL MOUNTED FAUCET SHALL BE EQUAL TO WOODFORD MODEL #26-P CHROME FINISH, WITH BACK FLOW PREVENTER, AND LOOSE TEE KEY.
RICB-1	REFRIGERATOR ICE CONNECTION BOX	-	-	3/4"	-	ICE CONNECTION BOX SHALL BE EQUAL TO GUY GRAY MODEL #BIM875.
TMV-1	THERMOSTATIC MIXING VALVE	-	-	1"	1"	THERMOSTATIC MIXING VALVE BRONZE BODY EQUAL TO WILKINS MODEL #34-ZW1070, 0.35GPM MINIMUM FLOW, LEAD FREE, MEET ASSE1070 REQUIREMENTS. INSTALL THERMOMETER IN THE TEMPERED WATER LINE TO PROVIDE ACCURATE MIXING TEMPERATURES. SET TEMPERATURE OUTLET TO 105°F. PROVIDE SERVICE SHUT-OFF VALVES ON INLETS AND OUTLET WATER LINES.
TP-1	ELECTRONIC TRAP PRIMER VALVE	-	-	1/2"	-	PRESSURE DROP ACTIVATED, DIAPHRAGM OPERATED TRAP PRIMER VALVE EQUAL TO PRECISION PLUMBING PRODUCTS "PO- 500". COMPLETE WITH DISTRIBUTION UNIT "DU-U" AS REQUIRED. PROVIDE SHUTOFF VALVE.
WHB-1	WALL HYDRANT BIB	-	-	3/4"	-	AUTOMATIC DRAINING WALL HYDRANT EQUAL TO ZURN MODEL #Z1300 ENCASED ANTI SIPHON, NON FREEZE, FOR FLUSH WALL INSTALLATION COMPLETE WITH BACK FLOW PREVENTER, CLOSURE VALVE, AND HINGED, KEY LOCKED COVER STAMPED "WATER".
3"FCO	FLOOR CLEAN OUT	3"	-	-	-	JOSAM 56010 SERIES, CAST IRON WITH ROUND, NICKLE BRONZE COVER, CARPET CLAMP, AND VANDAL PROOF SCREWS. PROVIDE UNDERDECK CLAMP FOR FLOOR CLEANOUTS ABOVE GROUND FLOOR.
3"YCO	YARD CLEAN OUT	3"	-	-	-	JOSAM 56010 SERIES, CAST IRON WITH ROUND, NICKLE BRONZE AND VANDAL PROOF SCREWS. PROVIDE UNDERDECK CLAMP FOR FLOOR CLEANOUTS ABOVE GROUND FLOOR.
4"FCO	FLOOR CLEAN OUT	4"	-	-	-	JOSAM 56010 SERIES, CAST IRON WITH ROUND, NICKLE BRONZE COVER, CARPET CLAMP, AND VANDAL PROOF SCREWS. PROVIDE UNDERDECK CLAMP FOR FLOOR CLEANOUTS ABOVE GROUND FLOOR.
4"YCO	YARD CLEAN OUT	4"	-	-	-	JOSAM 56010 SERIES, CAST IRON WITH ROUND, NICKLE BRONZE AND VANDAL PROOF SCREWS. PROVIDE UNDERDECK CLAMP FOR FLOOR CLEANOUTS ABOVE GROUND FLOOR.
FD-1	FLOOR DRAIN	3"	2"	1/2"TP	-	ZURN MODEL #Z415B LACQUERED CAST IRON FLOOR DRAIN. COMPLETE WITH "TYPE B" NICKEL BRONZE STRAINER AND 1/2" TRAP PRIMER CONNECTION.
FS-1	FLOOR SINK	3"	2"	1/2"TP	-	ZURN MODEL #Z-1900-P-4 PROCELAIN-ENAMELED CAST IRON FLOOR SINK. 12"X12"X6" WITH ANTI-SPLASH INTERIOR BOTTOM DOME STRAINER. PORCELAIN-ENAMELED CAST IRON 1/2 GRATE AND 1/2" TRAP PRIMER CONNECTION.
FS-2	FLOOR SINK	3"	2"	1/2"TP	-	ZURN MODEL #Z-1900-P-2 PROCELAIN-ENAMELED CAST IRON FLOOR SINK. 12"X12"X6" WITH ANTI-SPLASH INTERIOR BOTTOM DOME STRAINER. PORCELAIN-ENAMELED CAST IRON 1/2 GRATE AND 1/2" TRAP PRIMER CONNECTION.
RDC-1	ROOF DRAIN /OVERFLOW COMBINATION	(2) 6"	-	-	-	EPOXY COATED CAST IRON DUAL OUTLET ROOF DRAIN/OVERFLOW COMBINATION EQUAL TO WATTS MODEL #RD-700 WITH FLASHING CLAMP, INTEGRAL GRAVEL STOP, 4 IN. HIGH INTERNAL OVERFLOW STANDPIPE, SECURED DUCTILE IRON DOME, AND NO HUB OUTLETS.
DS-1	DOWNSPOUT	6"	-	-	-	JOSAM 25010 SERIES CAST BRONZE DOWNSPOUT NOZZLE WITH LOOSE WALL FLANGE, SATIN BRONZE TOP FINISH, NO HUB OUTLET, BIRD SCREEN.
GT-1	GREASE TRAP	4"	4"	-	-	100 GALLON CONCRETE GREASE TRAP INTERCEPTOR SHALL BE EQUAL TO OLDCASTLE PRECAST MODEL #356036-GI.
HTS-1	HEAT TRACE SYSTEM	-	-	-	-	HEAT TRACE SYSTEM FOR UNDERGROUND GREASE TRAP PIPING SHALL BE EQUAL TO RAYCHEM MODEL #5XL2-CT, 277V, COMPLETE WITH ELECTRONIC CONTROLLER, HEATING CABLE, TEMPERATURE SENSOR, JUNCTION BOXES, ACCESSORIES REQUIRED AND 1 INCH RIGID CELLULAR URETHANE THERMAL INSULATION FOR ALL UNDERGROUND GREASE WASTE PIPING.

Project Name: UTRGV SCHOOL OF MEDICINE TEAM BASED LEARNING CENTER
Prepared By: E.M. Date: 7/18/2018 Sht. No.: 1
SEWER FIXTURE UNITS CALCULATION (Table E103.3(2)) IPC
Project No.: 33828 Task Checked By: H.A. Date: 7/18/2018 of 1

FIXTURE TYPE	QTY.	CW	HW	Toatl CW	CW	HW	Total CW	REMARKS
Bathroom group (flush tank)		2.7	1.50	3.6	0	0	0	Private
Bathroom group (flush valve)		6	3	8	0	0	0	Private
Bathtub		1	1.00	1.4	0	0	0	Private
Bathtub		3	3.00	4	0	0	0	Public
Bidet		1.5	1.50	2	0	0	0	Private
Combination fixture		2.25	2.25	3	0	0	0	Private
Dishwashing machine (automatic)			1.4	1.4	0	0	0	Private
Drinking fountain	2	0.25	-	0.25	0.5	-	0.5	Offices, etc.
Kitchen sink	2	1	1.00	1.4	2	2	2.8	Private
Kithcen sink	2	3	3.00	4	6	6	8	Hotel, restaurant
Laundry tray (1 to 3)		1	1.00	1.4	0	0	0	Private
Lavatory		0.5	0.50	0.7	0	0	0	Private
Lavatory	14	1.5	1.50	2	21	21	28	Public
Service sink	3	2.25	2.25	3	6.75	6.75		Offices, etc.
Shower head		3	3.00	4	0	0	0	Public
Shower head		1	1.00	1.4	0	0	0	Private
Urinal (1" flush)		10	-	10	0	0	0	Public
Urinal (3/4" flush)	4	5	-	5	20	-	20	Public
Urinal (flush tank)		3	-	3	0	-	0	Public
Washing machine (8 lbs.)		1	1	1.4	0	-	0	Private
Washing machine (8 lbs.)		2.25	2.25	3	0	-	0	Public
Washing machine (15 lbs.)		3	3	4	0	-	0	Public
Water closet (flush valve)		6	-	6	0	-	0	Private
Water closet (flush tank)		2.2	-	2.2	0	-	0	Private
Water closet (flush valve)	14	10	-	10	140	-	140	Public
Water closet (flush tank)		5	-	5	0	-	0	Public
Water closet (flushometer tank)		2	-	2	0	-	0	Public or private
Misc.		1	0		0	0	0	
Misc.		1	0		0	0	0	
Misc.		1	0		0	0	0	
Misc.		1	0		0	0	0	
Emergency Eyewash		3	0		0	0	0	
Emergency Shower		23	0		0	0	0	
Hose Bibs		3	0		0	0	0	
					196	36	199	Fixture Unit Totals
					90	23	91	GPM
					2 1/2	1 1/4	2.5	Pipe Size (in.)

(a) For fixtures not listed, loads should be assumed by comparing the fixture to one listed using water in similar quantities and at similar rates. The assigned loads for fixtures with both hot and cold water supplies are given for separate hot and cold water loads and for total load, the separate hot and cold water loads being three-fourths of the total load for the fixture in each case.

Project Name: UTRGV SCHOOL OF MEDICINE TEAM BASED LEARNING CENTER
Prepared By: E.M. Date: 7/18/2018 Sht. No.: 1
WATER FIXTURE UNITS CALCULATION (Table 709.1) IPC
Project No.: 33828 Checked By: H.A. Date: 7/18/2018 of 1

FIXTURE TYPE	QTY.	San.	Total	REMARKS
Auotmatic clotheswasher, commercial (a)	0	3	0	
Automatic clotheswasher, residential	0	2	0	
Bathroom group (WC, Lav, Bidet & Tub or Shwr)	0	6	0	
Bathtub (with/without overhead shwr/whirtlpool)	0	2	0	
Bidet	0	1	0	
Combination sink & tray	0	2	0	
Dental lavatory	0	1	0	
Dental unit or cuspidor	0	1	0	
Dishwashing machine (e), domestic	0	2	0	
Drinking fountain	2	0.5	1	
Emergency floor drain	11	0	0	
Floor drains	4	2	8	
Kitchen sink, domestic	2	2	4	
Kitchen sink, domestic with food grinder and/or dishwasher	2	2		
Laundry tray (1 or 2 compartments)	0	2	0	
Lavatory	14	1	14	
Shower compartment, domestic	0	2	0	
Sink	0	2	0	
Urinal	0	4	0	(d)
Urinal, 1 gallon per flush or less	4	2	8	(e)(d)
Wash sink (circular or multiple) each set of faucets	0	2	0	
Water closet, flushometer tank, public/private	0	4	0	(e)(d)
Water closet, private installation	0	4	0	(d)
Water closet, public installation	14	6	84	(d)
1¼" fixture drain or trap size	0	1	0	
1½" fixture drain or trap size	0	2	0	
2" fixture drain or trap size	0	3	0	
3" fixture drain or trap size	0	5	0	
4" fixture drain or trap size	0	6	0	
Misc.	0	0	0	
Misc.	0	0	0	
			119	Fixture Unit Totals
			-	GPM
			4	Pipe Size (in.)

a For trap larger than 3 inches, use Table 709.2
b A showerhead over a bathtub or whirlpool bathtub attachments does not increase the drainage fixture unit value.
c See Sections 709.2 through 709.4 for methods of computing unit value of fixtures not listed in Table 709.1 or for rating of devices with intermittent flows.
d Trap size shall be consistent with the fixture outlet size.
e For the purpose of computing loads on building drains and sewers, water closets or urinals shall not be rated at a lower drainage fixture unit unless the lower values are confirmed by testing.

muñoz & company
1017 NORTH MAIN SUITE 300
SAN ANTONIO, TEXAS 78212
O. 210.349.1163 F. 210.525.1038
WWW.MUNOZ-CO.COM

HALFF
5000 WEST MILITARY, SUITE 100
McALLEN, TEXAS 78503
TEL (956) 664-0286
FAX (956) 664-0282
Halff Associates firm registration number is F-312

STATE OF TEXAS
HUGO H. AVILA
90071
LICENSED
PROFESSIONAL ENGINEER
11-8-18

UTRGV
The University of Texas Rio Grande Valley

UNIVERSITY OF TEXAS RIO GRANDE VALLEY
SCHOOL OF MEDICINE
TEAM BASED LEARNING CENTER
PROJECT NO: 903-1159
EDINBURG, TX
100% CONSTRUCTION DOCUMENTS

Issue/Revision

#	DESCRIPTION	DATE

Sheet Title
PLUMBING SCHEDULES

Date
NOVEMBER 08, 2018

Project Number	Drawn By	Checked By
33828	E.M.	H.A.

Sheet Number
P-401

WATER FLOW TEST REPORT

Allied Fire Protection SA, LP.
2110 Mannix San Antonio, TX 78217
(210) 646-6716
Texas SCR-G-08117

PROJECT NAME:	UTRGV - NEW DEVELOPMENT	PROJECT#:	
HYDRANT LOCATION:	1210 W SCHUNIOR ST, EDINBURG, TX 78541	DATE:	4/11/2018
TEST PERFORMED BY:	ALLIED FIRE PROTECTION	REPRESENTATIVE:	RUBEN DE LA CRUZ
DAY OF WEEK:	WEDNESDAY	TIME OF DAY: 2:30 PM	MINUTES FLOWED: 2
WITNESSED BY:	EDINBURG FIRE DEPARTMENT AND UTRGV ENVIRONMENTAL HEALTH, SAFETY, AND RISK MGMT		
WATER SUPPLIED BY:	EDINBURG WATER SUPPLY		

PURPOSE OF TEST: ☐ DESIGN ☐ BID ☑ OTHER

DATA

FLOW HYDRANT(S)	A1	A2	A3
SIZE OPENING:	2.5		
COEFFICIENT:	0.9		
PITOT READING:	25		
GPM:	839	0	0

STATIC PRESSURE READING: 64 PSI — RESIDUAL PRESSURE: 36 PSI

TOTAL FLOW DURING TEST: 839 GPM

AT 20 PSI RESIDUAL (FLOW RATE): 1071 GPM — AT 0 PSI 1311 GPM

ESTIMATED CONSUMPTION: 1678 GAL.

REMARKS:

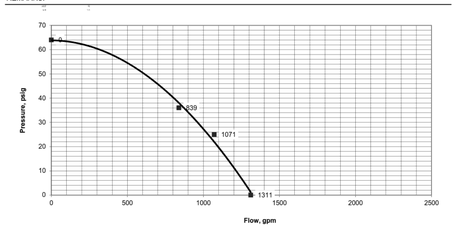

4 WATER FLOW TEST REPORT
N.T.S.

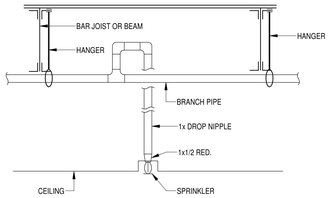

1 TYPICAL PENDENT SPRINKLER DETAIL
N.T.S.

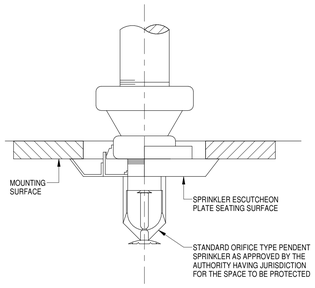

2 TWO-PIECE (ADJUSTABLE) FLUSH ESCUTCHEON PLATE
N.T.S.

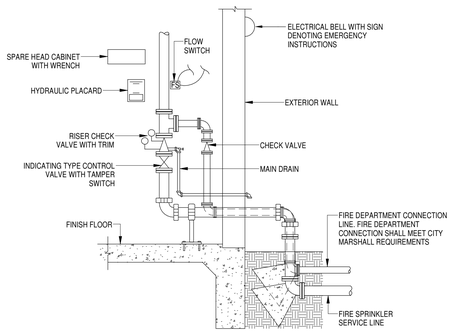

NOTE:
THIS RISER DIAGRAM IS SHOWN FOR INFORMATIONAL PURPOSES ONLY, THE FINAL RISER CONFIGURATION, NUMBER OF RISERS, SIZE OF PIPING AND ALL OTHER DESIGN REQUIREMENTS SHALL BE DETERMINED BY THE LICENSED FIRE PROTECTION SPECIALIST

3 FIRE SPRINKLER RISER
N.T.S.

muñoz & company
1017 NORTH MAIN SUITE 300
SAN ANTONIO, TEXAS 78212
O. 210.349.1163 F. 210.525.1038
W W W . M U N O Z - C O . C O M

HALFF
5000 WEST MILITARY, SUITE 100
McALLEN, TEXAS 78503
TEL (956) 664-0286
FAX (956) 664-0282
Halff Associates firm registration number is F-312

STATE OF TEXAS
HUGO H. AVILA
90071
LICENSED
PROFESSIONAL ENGINEER
11-8-18

UTRGV
The University of Texas Rio Grande Valley

UNIVERSITY OF TEXAS RIO GRANDE VALLEY
SCHOOL OF MEDICINE
TEAM BASED LEARNING CENTER
PROJECT NO: 903-1159
EDINBURG, TX
100% CONSTRUCTION DOCUMENTS

Issue/Revision

#	DESCRIPTION	DATE

Sheet Title
AUTOMATIC SPRINKLER SYSTEM PERFORMANCE SPECIFICATION NOTES

Date
NOVEMBER 08, 2018

Project Number	Drawn By	Checked By
33828	E.M.	H.A.

Sheet Number
FP-101

LEGEND

LIGHT HAZARD FOR CLASS ROOMS, OFFICES, CORRIDORS, GYMNASIUM, CAFETERIA, AUDITORIUM (EXCEPT STORAGE AREA), LIBRARY (EXCEPT LARGE STACK ROOM AREAS). DESIGN DENSITY IS 0.10 GPM/SQ.FT. 100 GPM HOSE ALLOWANCE DESIGN AREA=1500 SQ. FT.

ORDINARY HAZARD GROUP 2 FOR STORAGE ROOMS, MECHANICAL ROOMS, LARGE STACK ROOM AREAS OF THE LIBRARY (IF ANY). DESIGN DENSITY IS 0.20 GPM/SQ.FT. 250 GPM HOSE ALLOWANCE DESIGN AREA=1500 SQ. FT.

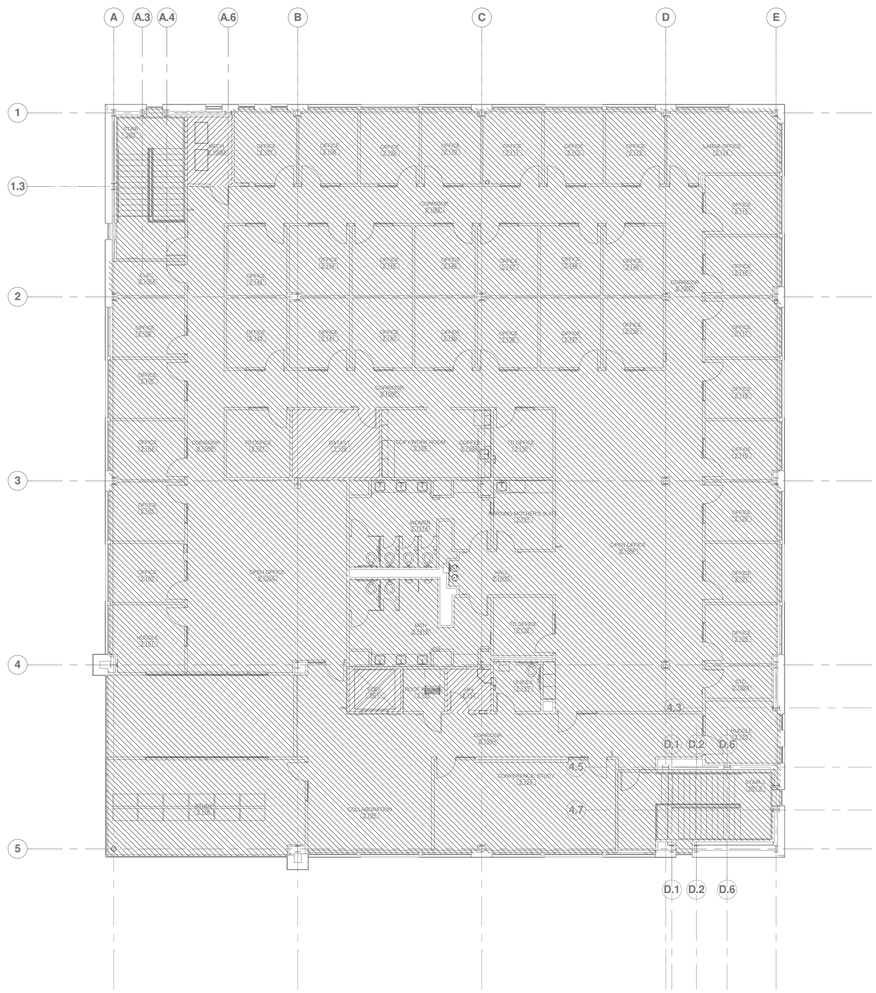

TRUE NORTH
PLAN NORTH

2 CONCEPTUAL FIRE PROTECTION PLAN LEVEL 2
1" = 10'-0"

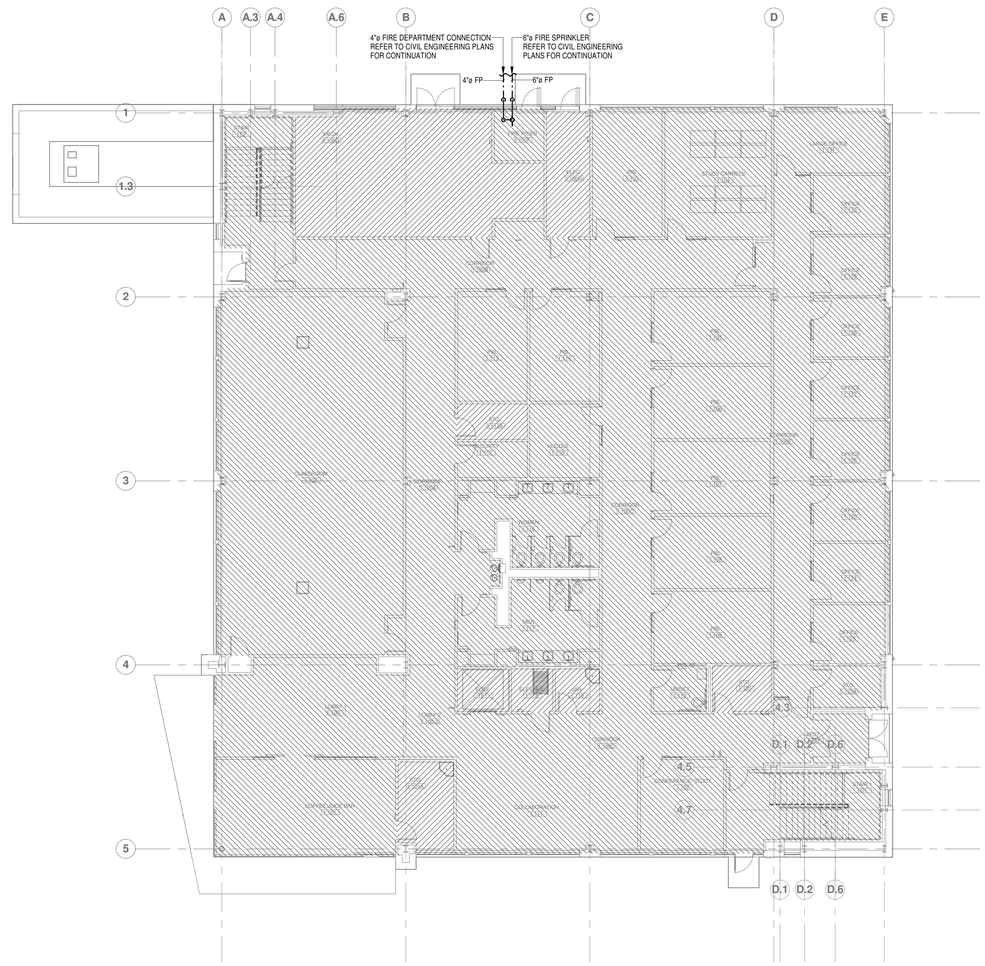

TRUE NORTH
PLAN NORTH

1 CONCEPTUAL FIRE PROTECTION PLAN LEVEL 1
1" = 10'-0"

THESE CONCEPTUAL FIRE SPRINKLER PROTECTION PLANS ARE FOR INFORMATION PURPOSES ONLY. ALL CIVIL AND FIRE SPRINKLER PLANS ARE TO BE SUBMITTED SEPARATELY TO THE FIRE DEPARTMENT FOR REVIEW OF COMPLIANCE TO THE RESPECTIVE GOVERNING STANDARDS.

muñoz & company
1017 NORTH MAIN SUITE 300
SAN ANTONIO, TEXAS 78212
O. 210.349.1163 F. 210.525.1038
WWW.MUNOZ-CO.COM

HALFF
5000 WEST MILITARY, SUITE 100
McALLEN, TEXAS 78503
TEL (956) 664-0286
FAX (956) 664-0282
Halff Associates firm registration number is F-312

STATE OF TEXAS
HUGO H. AVILA
90071
LICENSED
PROFESSIONAL ENGINEER
11-8-18

UTRGV
The University of Texas Rio Grande Valley

UNIVERSITY OF TEXAS RIO GRANDE VALLEY
SCHOOL OF MEDICINE
TEAM BASED LEARNING CENTER

PROJECT NO: 903-1159
EDINBURG, TX
100% CONSTRUCTION DOCUMENTS

Issue/Revision

#	DESCRIPTION	DATE

Sheet Title
CONCEPTUAL FIRE PROTECTION PLAN LEVEL 1 AND LEVEL 2

Date
NOVEMBER 08, 2018

Project Number	Drawn By	Checked By
33828	E.M.	H.A.

Sheet Number
FP-102

TECHNOLOGY SYMBOLS & LEGEND

VOICE SYMBOLS

	SINGLE VOICE OUTLET, CABLE TYPE AS SPECIFIED, MOUNTED +18-INCHES A.F.F. UNLESS OTHERWISE NOTED.
X	VOICE OUTLET, CABLE TYPE AS SPECIFIED, MOUNTED +18-INCHES A.F.F. UNLESS OTHERWISE NOTED. X = NUMBER OF CABLE TERMINATIONS PER LOCATION.
	SINGLE VOICE OUTLET, CABLE TYPE AS SPECIFIED, MOUNTED +6-INCHES ABOVE COUNTER OR BACKSPLASH UNLESS OTHERWISE NOTED.
X	VOICE OUTLET, CABLE TYPE AS SPECIFIED, MOUNTED +6-INCHES ABOVE COUNTER OR BACKSPLASH UNLESS OTHERWISE NOTED, X = NUMBER OF CABLE TERMINATIONS PER LOCATION AS INDICATED.
	POWER/COMMUNICATIONS POLE WITH A SINGLE VOICE OUTLET, CABLE TYPE AS SPECIFIED, MOUNTED AT 18" A.F.F. UNLESS OTHERWISE NOTED.
X	POWER/COMMUNICATIONS POLE WITH X = NUMBER OF VOICE OUTLETS, CABLE TYPE AS SPECIFIED, MOUNTED AT 18" A.F.F. UNLESS OTHERWISE NOTED.
	SINGLE VOICE OUTLET, CABLE TYPE AS SPECIFIED, TERMINATED IN FLOOR BOX/POKE-THRU AS SPECIFIED.
X	VOICE OUTLET, CABLE TYPE AS SPECIFIED, TERMINATED IN FLOOR BOX/POKE -THRU AS SPECIFIED WITH X = NUMBER OF VOICE TERMINATIONS PER LOCATION.
W	SINGLE VOICE OUTLET FOR WALL-MOUNTED IP PHONE, CABLE TYPE AS SPECIFIED, MOUNTED +52-INCHES A.F.F. UNLESS OTHERWISE NOTED.

DATA SYMBOLS

	SINGLE DATA OUTLET, CABLE TYPE AS SPECIFIED, MOUNTED +18-INCHES A.F.F. UNLESS OTHERWISE NOTED.
X	DATA OUTLET, CABLE TYPE AS SPECIFIED, MOUNTED +18-INCHES A.F.F. UNLESS OTHERWISE NOTED. X = NUMBER OF CABLE TERMINATIONS PER LOCATION.
	SINGLE DATA OUTLET, CABLE TYPE AS SPECIFIED, MOUNTED +6-INCHES ABOVE COUNTER OR BACKSPLASH UNLESS OTHERWISE NOTED.
X	DATA OUTLET, CABLE TYPE AS SPECIFIED, MOUNTED +6-INCHES ABOVE COUNTER OR BACKSPLASH UNLESS OTHERWISE NOTED, X = NUMBER OF CABLE TERMINATIONS PER LOCATION AS INDICATED.
	POWER/COMMUNICATIONS POLE WITH A SINGLE DATA OUTLET, CABLE TYPE AS SPECIFIED, MOUNTED AT 18" A.F.F. UNLESS OTHERWISE NOTED.
X	POWER/COMMUNICATIONS POLE WITH X = NUMBER OF DATA OUTLETS, CABLE TYPE AS SPECIFIED, MOUNTED AT 18" A.F.F. UNLESS OTHERWISE NOTED.
	SINGLE DATA OUTLET, CABLE TYPE AS SPECIFIED, TERMINATED IN FLOOR BOX/POKE-THRU AS SPECIFIED.
X	DATA OUTLET, CABLE TYPE AS SPECIFIED, TERMINATED IN FLOOR BOX/POKE -THRU AS SPECIFIED WITH X = NUMBER OF CABLE TERMINATIONS PER LOCATION.
W	SINGLE DATA OUTLET FOR WALL-MOUNTED IP PHONE, CABLE TYPE AS SPECIFIED, MOUNTED +52-INCHES A.F.F. UNLESS OTHERWISE NOTED.
	SINGLE ABOVE CEILING DATA OUTLET, CABLE TYPE AS SPECIFIED.
X	ABOVE CEILING DATA OUTLET, CABLE TYPE AS SPECIFIED WITH X = NUMBER OF CABLE TERMINATIONS PER LOCATION.

ROUGH-IN & MISC. SYMBOLS

	ROUGH-IN LOCATION, INFRASTRUCTURE AS SPECIFIED, MOUNTED +18-INCHES A.F.F. UNLESS OTHERWISE NOTED.
	ROUGH-IN LOCATION, INFRASTRUCTURE AS SPECIFIED, MOUNTED +6-INCHES ABOVE COUNTER OR BACKSPLASH UNLESS OTHERWISE NOTED.
	POWER POLE WITH ROUGH-IN LOCATION, INFRASTRUCTURE AS SPECIFIED, MOUNTED AT 18" A.F.F. UNLESS OTHERWISE NOTED.
	ROUGH-IN LOCATION, TERMINATED IN FLOOR BOX/POKE-THRU AS SPECIFIED.
WAP	WIRELESS ACCESS POINT. EQUIPMENT AS SPECIFIED.

GENERAL SYMBOLS

# SHEET DRAWING TITLE SCALE: SCALE	DRAWING TITLE CALLOUT, # = DETAIL NUMBER.
# SHEET	DETAIL CALLOUT, # = DETAIL NUMBER.
# SHEET	SECTION CALLOUT, # = DETAIL NUMBER.
SHEET #	ELEVATION CALLOUT, # = DETAIL NUMBER.
#	KEYED NOTE, # = KEYED NOTE NUMBER.
#	REVISION TRIANGLE, # = REVISION NUMBER (PER SHEET).
TR (IDF XXX)	INDICATES TELECOMMUNICATIONS REGION

VOICE/DATA SYMBOLS

	SINGLE VOICE & SINGLE DATA OUTLET, CABLE TYPE AS SPECIFIED, MOUNTED +18-INCHES A.F.F. UNLESS OTHERWISE NOTED.
X Y	VOICE & DATA OUTLET, CABLE TYPE AS SPECIFIED, MOUNTED +18-INCHES A.F.F. UNLESS OTHERWISE NOTED, X = NUMBER OF VOICE TERMINATIONS , Y = NUMBER OF DATA TERMINATIONS PER LOCATION.
	SINGLE VOICE & SINGLE DATA OUTLET, CABLE TYPE AS SPECIFIED, MOUNTED +6-INCHES ABOVE COUNTER OR BACKSPLASH UNLESS OTHERWISE NOTED.
X Y	VOICE & DATA OUTLET, CABLE TYPE AS SPECIFIED, MOUNTED +6-INCHES ABOVE COUNTER OR BACKSPLASH UNLESS OTHERWISE NOTED, X = NUMBER OF VOICE OUTLETS AND Y = NUMBER OF DATA OUTLETS PER LOCATION AS INDICATED.
	POWER/COMMUNICATIONS POLE WITH A SINGLE VOICE OUTLET AND SINGLE DATA OUTLET, CABLE TYPE AS SPECIFIED, MOUNTED AT 18" A.F.F. UNLESS OTHERWISE NOTED.
X Y	POWER/COMMUNICATIONS POLE WITH X = NUMBER OF VOICE TERMINATIONS, Y = NUMBER OF DATA TERMINATIONS, CABLE TYPE AS SPECIFIED, MOUNTED AT 18" A.F.F. UNLESS OTHERWISE NOTED.
	SINGLE VOICE OUTLET, CABLE TYPE AS SPECIFIED, TERMINATED IN FLOOR BOX/POKE-THRU AS SPECIFIED.
X Y	VOICE OUTLET, CABLE TYPE AS SPECIFIED, TERMINATED IN FLOOR BOX/POKE -THRU AS SPECIFIED WITH X = NUMBER OF VOICE TERMINATIONS, Y = NUMBER OF DATA TERMINATIONS PER LOCATION.

FIBER OPTIC SYMBOLS

	SINGLE FIBER OPTIC OUTLET, CABLE TYPE AS SPECIFIED, MOUNTED +18-INCHES A.F.F. UNLESS OTHERWISE NOTED.
X	FIBER OPTIC OUTLET, CABLE TYPE AS SPECIFIED, MOUNTED +18-INCHES A.F.F. UNLESS OTHERWISE NOTED. X = NUMBER OF CABLE TERMINATIONS PER LOCATION.
	SINGLE FIBER OPTIC OUTLET, CABLE TYPE AS SPECIFIED, MOUNTED +6-INCHES ABOVE COUNTER OR BACKSPLASH UNLESS OTHERWISE NOTED.
X	FIBER OPTIC OUTLET, CABLE TYPE AS SPECIFIED, MOUNTED +6-INCHES ABOVE COUNTER OR BACKSPLASH UNLESS OTHERWISE NOTED, X = NUMBER OF CABLE TERMINATIONS PER LOCATION AS INDICATED.
	POWER/COMMUNICATIONS POLE WITH A SINGLE FIBER OPTIC OUTLET, CABLE TYPE AS SPECIFIED, MOUNTED AT 18" A.F.F. UNLESS OTHERWISE NOTED.
X	POWER/COMMUNICATIONS POLE WITH X = NUMBER OF FIBER OPTIC OUTLETS, CABLE TYPE AS SPECIFIED, MOUNTED AT 18" A.F.F. UNLESS OTHERWISE NOTED.
	SINGLE FIBER OPTIC OUTLET, CABLE TYPE AS SPECIFIED, TERMINATED IN FLOOR BOX/POKE-THRU AS SPECIFIED.
X	FIBER OPTIC OUTLET, CABLE TYPE AS SPECIFIED, TERMINATED IN FLOOR BOX/POKE -THRU AS SPECIFIED WITH X = NUMBER OF CABLE TERMINATIONS PER LOCATION.

CABLE PLANT & RISER DIAGRAM

	MAINTENANCE HOLE, SIZE & TYPE AS SPECIFIED.
	PULLBOX, SIZE AND TYPE AS SPECIFIED.
UGC	DIRECT BURIED COMMUNICATIONS, CABLE TYPE AS SPECIFIED.
AER	AERIAL COMMUNICATIONS, CABLE TYPE AS SPECIFIED.
	CONDUIT, SIZE AND TYPE AS SPECIFIED.

ABBREVIATIONS

A.F.F.	ABOVE FINISHED FLOOR
A.F.G.	ABOVE FINISHED GRADE
AER	AERIAL
DEMARC	DEMARCATION POINT
EMT	ELECTRIC METALLIC TUBE
F.O.C.	FIBER OPTIC CABLE
GIP	GALVANIZED IRON PIPE
HE	PA/INTERCOM HEAD-END
IMC	INTERMEDIATE METAL CONDUIT
ISP	INSIDE CABLE PLANT
IDF	INTERMEDIATE DISTRIBUTION FRAME
MDF	MAIN DISTRIBUTION FRAME
MH	MAINTENANCE HOLE
MM	MULTIMODE
OSP	OUTSIDE CABLE PLANT
PB	PULLBOX
PR	PAIR
PVC	POLYVINYL CHLORIDE
RSC	RIGID STEEL CONDUIT
SM	SINGLE MODE
SP	SERVICE PROVIDER
STP	SHIELDED TWISTED PAIR
TB	TERMINAL BLOCK
TR	TELECOMMUNICATION REGION
UGC	UNDERGROUND COMMUNICATION
UON	UNLESS OTHERWISE NOTED
UTP	UNSHIELDED TWISTED PAIR

NOTES

1. CONTRACTOR SHALL REVIEW DRAWINGS AND SPECIFICATIONS THAT MAKE UP THE CONTRACT DOCUMENTS AND COMPLETE ALL WORK INCLUDED THEREIN.
2. SCALE OF TECHNOLOGY DRAWINGS IS PROVIDED FOR REFERENCE ONLY. CONTRACTOR SHALL BE RESPONSIBLE FOR PROPER CABLE LENGTHS, SIZE OF PATHWAYS, DIMENSIONS, ETC.
3. TECHNOLOGY DRAWINGS SHALL BE USED TO COMPLEMENT THE WRITTEN SPECIFICATIONS.
4. ANY DISCREPANCY OR CONFLICT WITHIN OR BETWEEN THE DRAWINGS AND SPECIFICATIONS SHALL BE BROUGHT TO THE ATTENTION OF THE ARCHITECT/ENGINEER. DISCREPANCIES OR CONFLICTS NOT BROUGHT TO THE ATTENTION OF THE ARCHITECT/ENGINEER AND SUBSEQUENTLY CLARIFIED DURING THE BIDDING OF THE PROJECT WILL BE DEEMED TO HAVE BEEN BID OR PROPOSED IN THE MORE COSTLY OR DIFFICULT MANNER, AND THE BETTER QUALITY OR GREATER QUANTITY OF WORK SHALL BE PROVIDED BY THE CONTRACTOR IN ACCORDANCE WITH THE ARCHITECTS/ENGINEER'S INTERPRETATION.

INDEX OF DRAWINGS

T-000	TECHNOLOGY SYMBOLS & LEGEND
T-101	UTRGV SOM OFFICE BLDG TECHNOLOGY SITE PLAN - BASE BID
T-102	UTRGV SOM BLDG TECHNOLOGY SITE CONDUIT ROUTING
T-201	TECHNOLOGY LEVEL ONE - BASE BID FLOOR PLAN
T-202	TECHNOLOGY LEVEL TWO - BASE BID FLOOR PLAN
T-300	TECHNOLOGY ROOM LAYOUTS AND RACK ELEVATIONS
T-400	TECHNOLOGY TYPICAL DETAILS
T-401	TECHNOLOGY TYPICAL DETAILS
T-500	TECHNOLOGY TYPICAL DETAILS & LABELING SCHEME

muñoz & company
1017 NORTH MAIN SUITE 300
SAN ANTONIO, TEXAS 78212
O. 210.349.1163 F. 210.525.1038
WWW.MUNOZ-CO.COM

COMBS Consulting Group
10 years
technology & security
SAN ANTONIO
8200 IH-10 West, Ste. 103
San Antonio, Texas 78230
Phone : 210-698-7887
AUSTIN
4425 S. Mopac
Bldg. 4, Ste. 800
Austin, Texas 78735

REGISTERED COMMUNICATIONS DISTRIBUTION DESIGNER
Bicsi
BILL E HENRICH
REG. No. 191959R
EXPIRES 12-31-19
SIGNATURE
11-6-2018

UTRGV
The University of Texas Rio Grande Valley

UNIVERSITY OF TEXAS RIO GRANDE VALLEY
SCHOOL OF MEDICINE
TEAM BASED LEARNING CENTER
PROJECT NO: 903-1159
EDINBURG, TX
100% CONSTRUCTION DOCUMENTS

Issue/Revision

#	DESCRIPTION	DATE

Sheet Title
TECHNOLOGY SYMBOLS AND LEGEND

BP1 & BP2

Date
NOVEMBER 08, 2018

Project Number	Drawn By	Checked By
A17021.00	PM	DR

Sheet Number
T-000

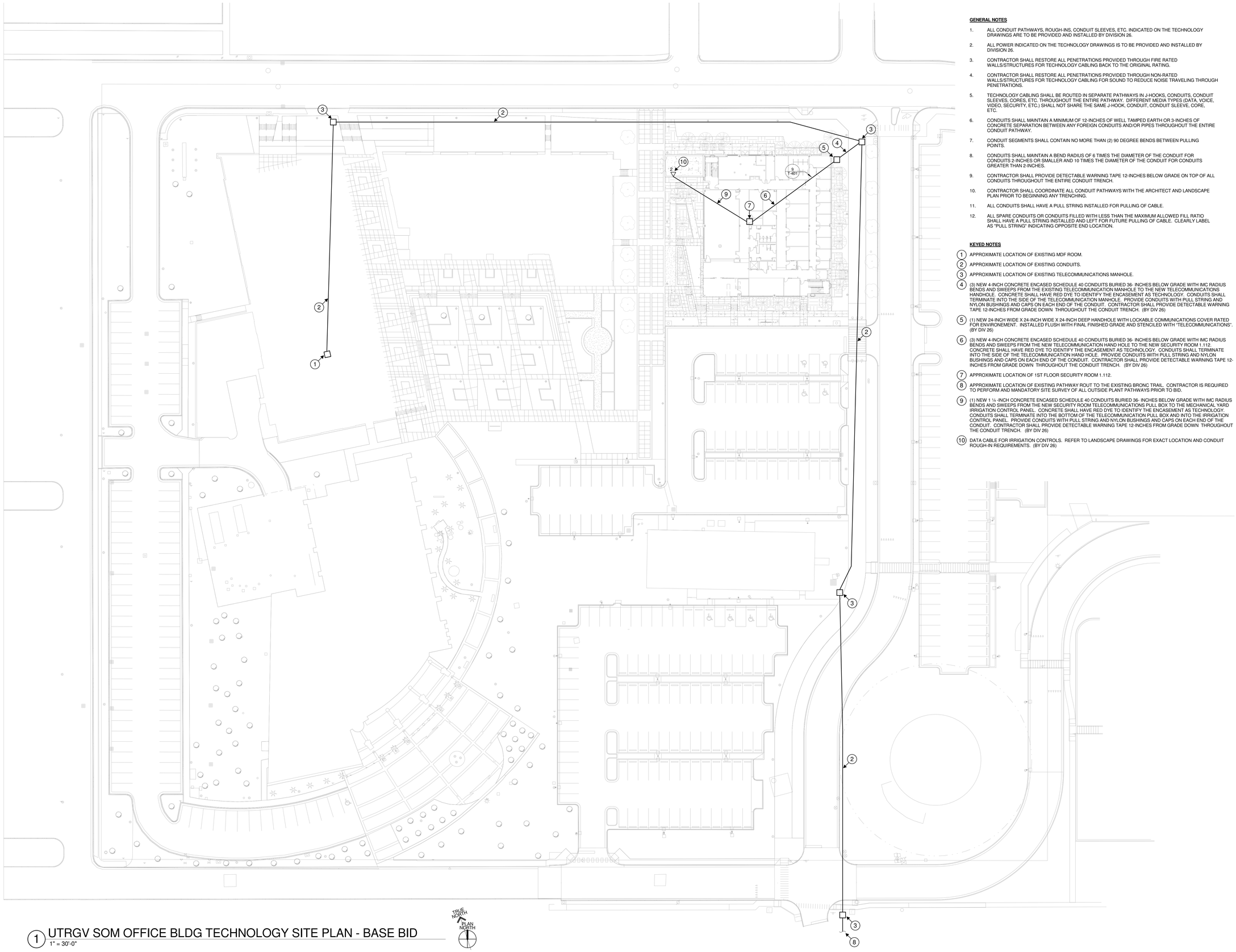

1 UTRGV SOM OFFICE BLDG TECHNOLOGY SITE PLAN - BASE BID
1" = 30'-0"

GENERAL NOTES

1. ALL CONDUIT PATHWAYS, ROUGH-INS, CONDUIT SLEEVES, ETC. INDICATED ON THE TECHNOLOGY DRAWINGS ARE TO BE PROVIDED AND INSTALLED BY DIVISION 26.
2. ALL POWER INDICATED ON THE TECHNOLOGY DRAWINGS IS TO BE PROVIDED AND INSTALLED BY DIVISION 26.
3. CONTRACTOR SHALL RESTORE ALL PENETRATIONS PROVIDED THROUGH FIRE RATED WALLS/STRUCTURES FOR TECHNOLOGY CABLING BACK TO THE ORIGINAL RATING.
4. CONTRACTOR SHALL RESTORE ALL PENETRATIONS PROVIDED THROUGH NON-RATED WALLS/STRUCTURES FOR TECHNOLOGY CABLING FOR SOUND TO REDUCE NOISE TRAVELING THROUGH PENETRATIONS.
5. TECHNOLOGY CABLING SHALL BE ROUTED IN SEPARATE PATHWAYS IN J-HOOKS, CONDUITS, CONDUIT SLEEVES, CORES, ETC. THROUGHOUT THE ENTIRE PATHWAY. DIFFERENT MEDIA TYPES (DATA, VOICE, VIDEO, SECURITY, ETC.) SHALL NOT SHARE THE SAME J-HOOK, CONDUIT, CONDUIT SLEEVE, CORE, ETC.
6. CONDUITS SHALL MAINTAIN A MINIMUM OF 12-INCHES OF WELL TAMPED EARTH OR 3-INCHES OF CONCRETE SEPARATION BETWEEN ANY FOREIGN CONDUITS AND/OR PIPES THROUGHOUT THE ENTIRE CONDUIT PATHWAY.
7. CONDUIT SEGMENTS SHALL CONTAIN NO MORE THAN (2) 90 DEGREE BENDS BETWEEN PULLING POINTS.
8. CONDUITS SHALL MAINTAIN A BEND RADIUS OF 6 TIMES THE DIAMETER OF THE CONDUIT FOR CONDUITS 2-INCHES OR SMALLER AND 10 TIMES THE DIAMETER OF THE CONDUIT FOR CONDUITS GREATER THAN 2-INCHES.
9. CONTRACTOR SHALL PROVIDE DETECTABLE WARNING TAPE 12-INCHES BELOW GRADE ON TOP OF ALL CONDUITS THROUGHOUT THE ENTIRE CONDUIT TRENCH.
10. CONTRACTOR SHALL COORDINATE ALL CONDUIT PATHWAYS WITH THE ARCHITECT AND LANDSCAPE PLAN PRIOR TO BEGINNING ANY TRENCHING.
11. ALL CONDUITS SHALL HAVE A PULL STRING INSTALLED FOR PULLING OF CABLE.
12. ALL SPARE CONDUITS OR CONDUITS FILLED WITH LESS THAN THE MAXIMUM ALLOWED FILL RATIO SHALL HAVE A PULL STRING INSTALLED AND LEFT FOR FUTURE PULLING OF CABLE. CLEARLY LABEL AS "PULL STRING" INDICATING OPPOSITE END LOCATION.

KEYED NOTES

1. APPROXIMATE LOCATION OF EXISTING MDF ROOM.
2. APPROXIMATE LOCATION OF EXISTING CONDUITS.
3. APPROXIMATE LOCATION OF EXISTING TELECOMMUNICATIONS MANHOLE.
4. (3) NEW 4-INCH CONCRETE ENCASED SCHEDULE 40 CONDUITS BURIED 36- INCHES BELOW GRADE WITH IMC RADIUS BENDS AND SWEEPS FROM THE EXISTING TELECOMMUNICATION MANHOLE TO THE NEW TELECOMMUNICATIONS HANDHOLE. CONCRETE SHALL HAVE RED DYE TO IDENTIFY THE ENCASEMENT AS TECHNOLOGY. CONDUITS SHALL TERMINATE INTO THE SIDE OF THE TELECOMMUNICATION MANHOLE. PROVIDE CONDUITS WITH PULL STRING AND NYLON BUSHINGS AND CAPS ON EACH END OF THE CONDUIT. CONTRACTOR SHALL PROVIDE DETECTABLE WARNING TAPE 12-INCHES FROM GRADE DOWN THROUGHOUT THE CONDUIT TRENCH. (BY DIV 26)
5. (1) NEW 24-INCH WIDE X 24-INCH WIDE X 24-INCH DEEP HANDHOLE WITH LOCKABLE COMMUNICATIONS COVER RATED FOR ENVIRONEMENT. INSTALLED FLUSH WITH FINAL FINISHED GRADE AND STENCILED WITH "TELECOMMUNICATIONS". (BY DIV 26)
6. (3) NEW 4-INCH CONCRETE ENCASED SCHEDULE 40 CONDUITS BURIED 36- INCHES BELOW GRADE WITH IMC RADIUS BENDS AND SWEEPS FROM THE NEW TELECOMMUNICATION HAND HOLE TO THE NEW SECURITY ROOM 1.112. CONCRETE SHALL HAVE RED DYE TO IDENTIFY THE ENCASEMENT AS TECHNOLOGY. CONDUITS SHALL TERMINATE INTO THE SIDE OF THE TELECOMMUNICATION HAND HOLE. PROVIDE CONDUITS WITH PULL STRING AND NYLON BUSHINGS AND CAPS ON EACH END OF THE CONDUIT. CONTRACTOR SHALL PROVIDE DETECTABLE WARNING TAPE 12-INCHES FROM GRADE DOWN THROUGHOUT THE CONDUIT TRENCH. (BY DIV 26)
7. APPROXIMATE LOCATION OF 1ST FLOOR SECURITY ROOM 1.112.
8. APPROXIMATE LOCATION OF EXISTING PATHWAY ROUT TO THE EXISTING BRONC TRAIL. CONTRACTOR IS REQUIRED TO PERFORM AND MANDATORY SITE SURVEY OF ALL OUTSIDE PLANT PATHWAYS PRIOR TO BID.
9. (1) NEW 1 ¼ -INCH CONCRETE ENCASED SCHEDULE 40 CONDUITS BURIED 36- INCHES BELOW GRADE WITH IMC RADIUS BENDS AND SWEEPS FROM THE NEW SECURITY ROOM TELECOMMUNICATIONS PULL BOX TO THE MECHANICAL YARD IRRIGATION CONTROL PANEL. CONCRETE SHALL HAVE RED DYE TO IDENTIFY THE ENCASEMENT AS TECHNOLOGY. CONDUITS SHALL TERMINATE INTO THE BOTTOM OF THE TELECOMMUNICATION PULL BOX AND INTO THE IRRIGATION CONTROL PANEL. PROVIDE CONDUITS WITH PULL STRING AND NYLON BUSHINGS AND CAPS ON EACH END OF THE CONDUIT. CONTRACTOR SHALL PROVIDE DETECTABLE WARNING TAPE 12-INCHES FROM GRADE DOWN THROUGHOUT THE CONDUIT TRENCH. (BY DIV 26)
10. DATA CABLE FOR IRRIGATION CONTROLS. REFER TO LANDSCAPE DRAWINGS FOR EXACT LOCATION AND CONDUIT ROUGH-IN REQUIREMENTS. (BY DIV 26)

muñoz & company
1017 NORTH MAIN SUITE 300
SAN ANTONIO, TEXAS 78212
O. 210.349.1163 F. 210.525.1038
WWW.MUNOZ-CO.COM

COMBS Consulting Group
10 years
technology & security
SAN ANTONIO
8200 IH-10 West, Ste. 103
San Antonio, Texas 78230
Phone : 210-698-7887
AUSTIN
4425 S. Mopac
Bldg. 4, Ste. 800
Austin, Texas 78735

REGISTERED COMMUNICATIONS DISTRIBUTION DESIGNER
Bicsi
BILL E HENRICH
REG. No. 191959R
EXPIRES 12-31-19
SIGNATURE
11-6-2018

UTRGV
The University of Texas Rio Grande Valley

UNIVERSITY OF TEXAS RIO GRANDE VALLEY
SCHOOL OF MEDICINE
TEAM BASED LEARNING CENTER

PROJECT NO: 903-1159
EDINBURG, TX
100% CONSTRUCTION DOCUMENTS

Issue/Revision

#	DESCRIPTION	DATE

Sheet Title
UTRGV SOM OFFICE BLDG TECHNOLOGY SITE PLAN

BP1

Date
NOVEMBER 08, 2018

Project Number	Drawn By	Checked By
A17021.00	PM	DR

Sheet Number
T-101

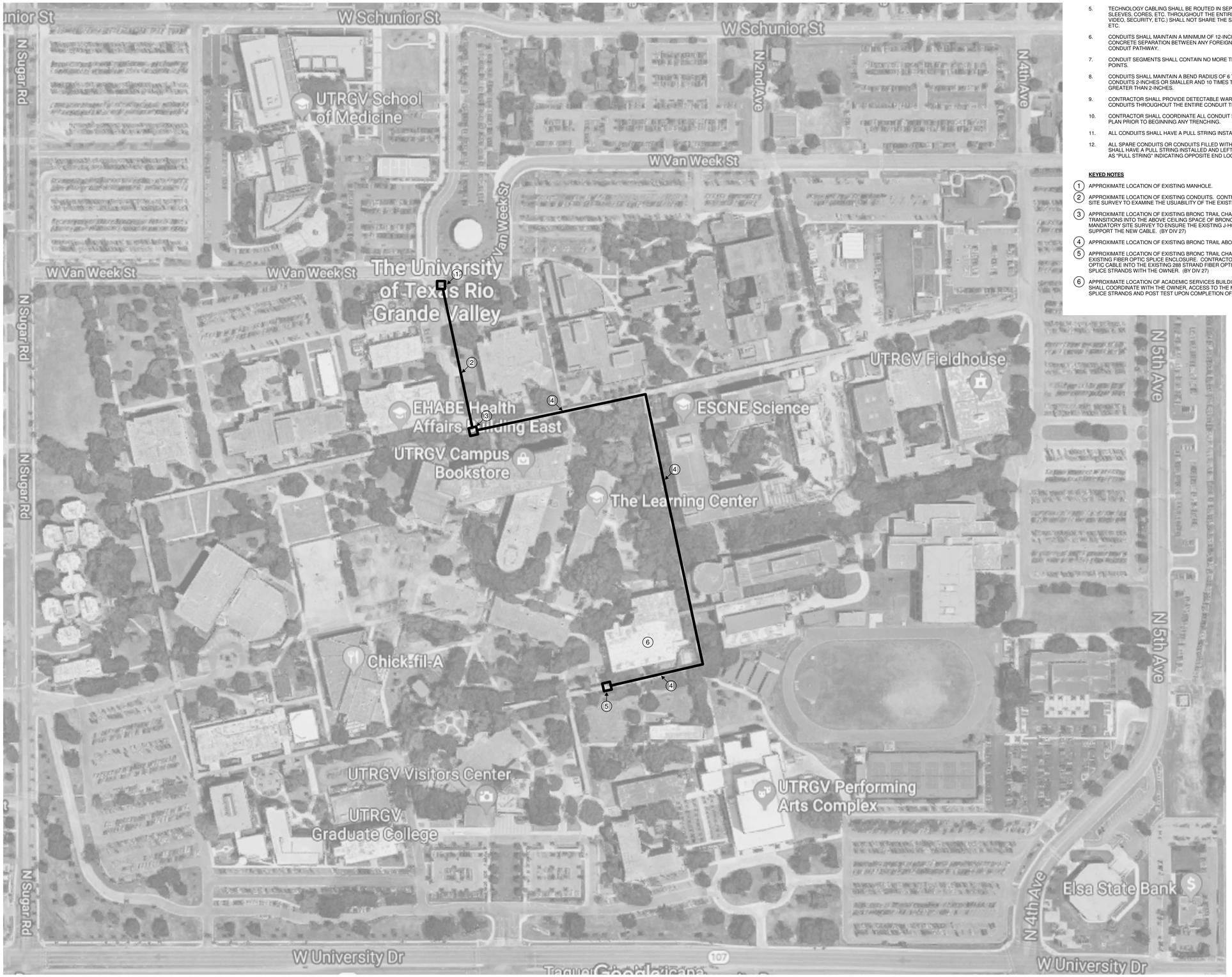

1 UTRGV CAMPUS SITE PLAN
NOT TO SCALE

GENERAL NOTES

1. ALL CONDUIT PATHWAYS, ROUGH-INS, CONDUIT SLEEVES, ETC. INDICATED ON THE TECHNOLOGY DRAWINGS ARE TO BE PROVIDED AND INSTALLED BY DIVISION 26.
2. ALL POWER INDICATED ON THE TECHNOLOGY DRAWINGS IS TO BE PROVIDED AND INSTALLED BY DIVISION 26.
3. CONTRACTOR SHALL RESTORE ALL PENETRATIONS PROVIDED THROUGH FIRE RATED WALLS/STRUCTURES FOR TECHNOLOGY CABLING BACK TO THE ORIGINAL RATING.
4. CONTRACTOR SHALL RESTORE ALL PENETRATIONS PROVIDED THROUGH NON-RATED WALLS/STRUCTURES FOR TECHNOLOGY CABLING FOR SOUND TO REDUCE NOISE TRAVELING THROUGH PENETRATIONS.
5. TECHNOLOGY CABLING SHALL BE ROUTED IN SEPARATE PATHWAYS IN J-HOOKS, CONDUITS, CONDUIT SLEEVES, CORES, ETC. THROUGHOUT THE ENTIRE PATHWAY. DIFFERENT MEDIA TYPES (DATA, VOICE, VIDEO, SECURITY, ETC.) SHALL NOT SHARE THE SAME J-HOOK, CONDUIT, CONDUIT SLEEVE, CORE, ETC.
6. CONDUITS SHALL MAINTAIN A MINIMUM OF 12-INCHES OF WELL TAMPED EARTH OR 3-INCHES OF CONCRETE SEPARATION BETWEEN ANY FOREIGN CONDUITS AND/OR PIPES THROUGHOUT THE ENTIRE CONDUIT PATHWAY.
7. CONDUIT SEGMENTS SHALL CONTAIN NO MORE THAN (2) 90 DEGREE BENDS BETWEEN PULLING POINTS.
8. CONDUITS SHALL MAINTAIN A BEND RADIUS OF 6 TIMES THE DIAMETER OF THE CONDUIT FOR CONDUITS 2-INCHES OR SMALLER AND 10 TIMES THE DIAMETER OF THE CONDUIT FOR CONDUITS GREATER THAN 2-INCHES.
9. CONTRACTOR SHALL PROVIDE DETECTABLE WARNING TAPE 12-INCHES BELOW GRADE ON TOP OF ALL CONDUITS THROUGHOUT THE ENTIRE CONDUIT TRENCH.
10. CONTRACTOR SHALL COORDINATE ALL CONDUIT PATHWAYS WITH THE ARCHITECT AND LANDSCAPE PLAN PRIOR TO BEGINNING ANY TRENCHING.
11. ALL CONDUITS SHALL HAVE A PULL STRING INSTALLED FOR PULLING OF CABLE.
12. ALL SPARE CONDUITS OR CONDUITS FILLED WITH LESS THAN THE MAXIMUM ALLOWED FILL RATIO SHALL HAVE A PULL STRING INSTALLED AND LEFT FOR FUTURE PULLING OF CABLE. CLEARLY LABEL AS "PULL STRING" INDICATING OPPOSITE END LOCATION.

KEYED NOTES

1. APPROXIMATE LOCATION OF EXISTING MANHOLE.
2. APPROXIMATE LOCATION OF EXISTING CONDUITS. CONTRACTOR SHALL PERFORM A PREBID MANDATORY SITE SURVEY TO EXAMINE THE USUABILITY OF THE EXISTING TECHNOLOGY CONDUITS. (BY DIV 27).
3. APPROXIMATE LOCATION OF EXISTING BRONC TRAIL CHASE ROOM WHERE THE CABLE PATHWAY TRANSITIONS INTO THE ABOVE CEILING SPACE OF BRONC TRAIL. CONTRACTOR SHALL PERFORM A MANDATORY SITE SURVEY TO ENSURE THE EXISTING J-HOOKS IN THE ABOVE CEILING SPACE CAN SUPPORT THE NEW CABLE. (BY DIV 27)
4. APPROXIMATE LOCATION OF EXISTING BRONC TRAIL ABOVE CEILING PATHWAY.
5. APPROXIMATE LOCATION OF EXISTING BRONC TRAIL CHASE. THE CONTRACTOR SHALL USE THE EXISTING FIBER OPTIC SPLICE ENCLOSURE. CONTRACTOR SHALL SPLICE THE NEW 24 STRAND FIBER OPTIC CABLE INTO THE EXISTING 288 STRAND FIBER OPTIC CABLE. CONTRACTOR SHALL COORDINATE SPLICE STRANDS WITH THE OWNER. (BY DIV 27)
6. APPROXIMATE LOCATION OF ACADEMIC SERVICES BUILDING WHERE MDF IS LOCATED. CONTRACTOR SHALL COORDINATE WITH THE OWNER, ACCESS TO THE MDF TO PERFORM PRETEST OF THE EXISTING SPLICE STRANDS AND POST TEST UPON COMPLETION OF SPLICING. (BY DIV 27)

muñoz & company
1017 NORTH MAIN SUITE 300
SAN ANTONIO, TEXAS 78212
O. 210.349.1163 F. 210.525.1038
WWW.MUNOZ-CO.COM

COMBS Consulting Group
10 years
technology & security
SAN ANTONIO
8200 IH-10 West, Ste. 103
San Antonio, Texas 78230
Phone : 210-698-7887
AUSTIN
4425 S. Mopac
Bldg. 4, Ste. 800
Austin, Texas 78735

REGISTERED COMMUNICATIONS DISTRIBUTION DESIGNER
Bicsi
BILL E HENRICH
REG. No. 191959R
EXPIRES 12-31-19
SIGNATURE
11-6-2018

UTRGV
The University of Texas Rio Grande Valley

UNIVERSITY OF TEXAS RIO GRANDE VALLEY
SCHOOL OF MEDICINE
TEAM BASED LEARNING CENTER
PROJECT NO: 903-1159
EDINBURG, TX
100% CONSTRUCTION DOCUMENTS

Issue/Revision

#	DESCRIPTION	DATE

Sheet Title
UTRGV SOM BLDG TECHNOLOGY SITE CONDUIT ROUTING

BP2

Date
NOVEMBER 08, 2018

Project Number	Drawn By	Checked By
A17021.00	PM	DR

Sheet Number
T-102

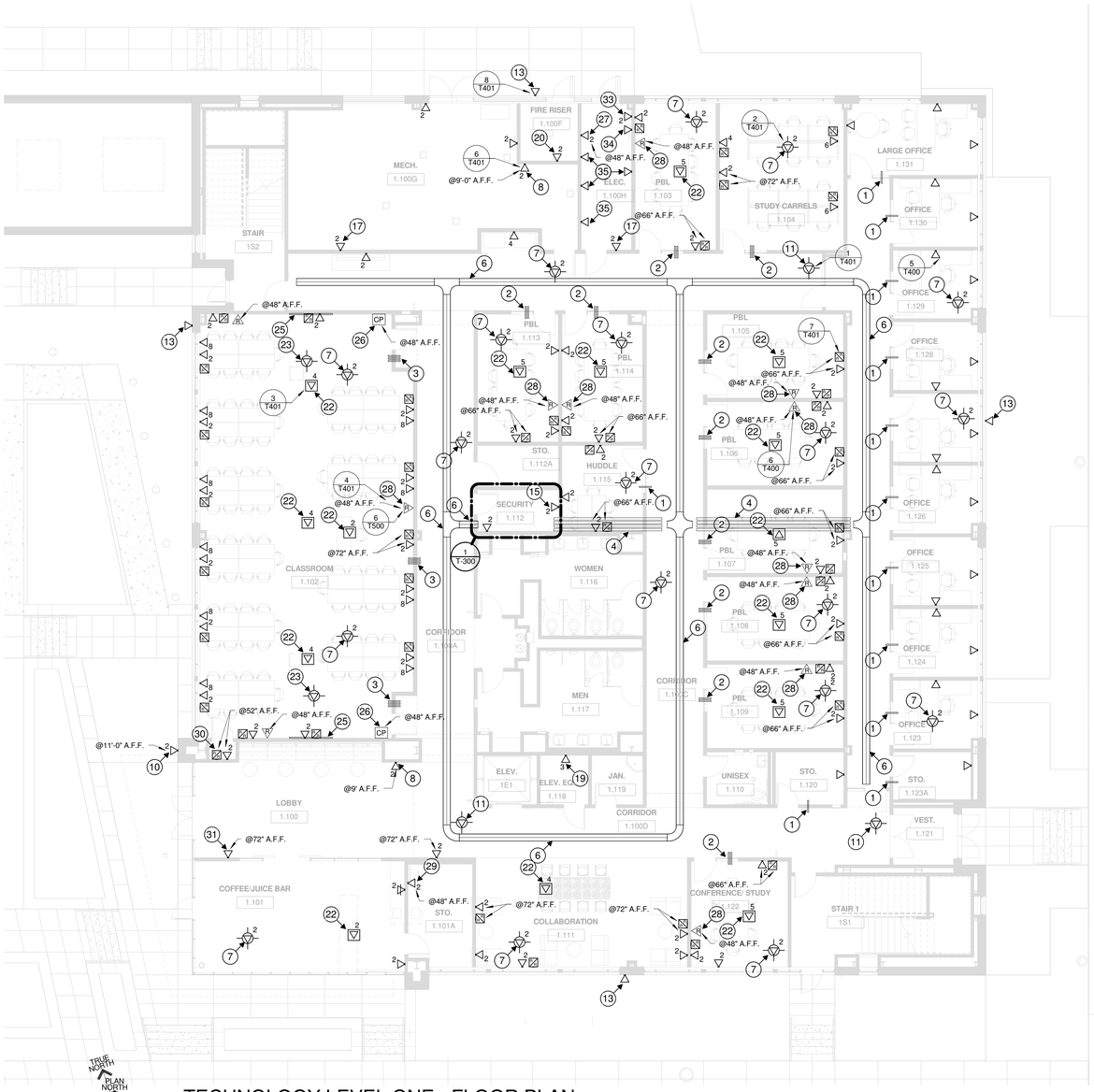

1 TECHNOLOGY LEVEL ONE - FLOOR PLAN
1/8" = 1'-0"

GENERAL NOTES

1. THE TECHNOLOGY REGION / WIRING BOUNDARIES ARE IDENTIFIED ON THE OVERALL SHEETS ONLY AND NOT ON THE ENLARGED SHEETS. CONTRACTOR SHALL REFER TO THE OVERALL SHEETS FOR ALL TECHNOLOGY REGIONS / WIRING BOUNDARIES.
2. ALL CONDUIT PATHWAYS, ROUGH-INS, BACKBOXES, FLOOR BOXES, CONDUIT SLEEVES, ETC. INDICATED ON THE TECHNOLOGY DRAWINGS ARE TO BE PROVIDED AND INSTALLED BY DIVISION 26.
3. ALL POWER INDICATED ON THE TECHNOLOGY DRAWINGS IS TO BE PROVIDED AND INSTALLED BY DIVISION 26.
4. CONTRACTOR SHALL RESTORE ALL PENETRATIONS PROVIDED THROUGH FIRE RATED WALLS/STRUCTURES FOR TECHNOLOGY CABLING BACK TO THE ORIGINAL RATING.
5. CONTRACTOR SHALL RESTORE ALL PENETRATIONS PROVIDED THROUGH NON-RATED WALLS/STRUCTURES FOR TECHNOLOGY CABLING FOR SOUND TO REDUCE NOISE TRAVELING THROUGH PENETRATIONS.
6. TECHNOLOGY CABLING SHALL BE ROUTED IN SEPARATE PATHWAYS IN J-HOOKS, CONDUITS, CONDUIT SLEEVES, CORES, ETC. THROUGHOUT THE ENTIRE PATHWAY. DIFFERENT MEDIA TYPES (DATA, VIDEO, SECURITY, ETC.) SHALL NOT SHARE THE SAME J-HOOK, CONDUIT, CONDUIT SLEEVE, CORE, ETC.
7. UNLESS NOTED OTHERWISE, ALL CONDUITS FOR TECHNOLOGY DEVICES SHALL ROUTE FROM THE DEVICE LOCATION AND TERMINATE ABOVE AN ACCESSIBLE CEILING (AN OPEN CEILING IS NOT CONSIDERED AN ACCESSIBLE CEILING) IN THE SAME ROOM WHERE THE DEVICE IS LOCATED. IF THE ROOM WHERE THE DEVICE IS LOCATED DOES NOT HAVE AN ACCESSIBLE CEILING, THE CONDUIT SHALL ROUTE TO THE NEAREST ACCESSIBLE CEILING OFF A MAIN CORRIDOR. CONDUIT PATHWAY SHALL TAKE THE SHORTEST ROUTE TO THE APPLICABLE MDF / IDF ROOM TO MINIMIZE THE CABLE LENGTH ENSURING CABLE LENGTH DOES NOT EXCEED 275FEET.
8. UNLESS NOTED OTHERWISE ALL CONDUITS SHALL BE HOMERUN FROM THE DEVICE LOCATION AND NO DAISY CHAINING OF DEVICES / ROUGH-INS SHALL BE ALLOWED.
9. CONDUIT SEGMENTS SHALL BE NO MORE THAN 100-FEET IN LENGTH WITH NO MORE THAN THE EQUIVALENT OF (2) 90 DEGREE BENDS BETWEEN PULLING POINTS.
10. CONDUITS SHALL MAINTAIN A BEND RADIUS OF 6 TIMES THE DIAMETER OF THE CONDUIT FOR CONDUITS 2-INCHES OR SMALLER AND 10 TIMES THE DIAMETER OF THE CONDUIT FOR CONDUITS GREATER THAN 2-INCHES.
11. ALL CONDUITS SHALL HAVE A PULL STRING INSTALLED FOR PULLING OF CABLE. CLEARLY LABEL AS "PULL STRING" INDICATING OPPOSITE END LOCATION.
12. ALL SPARE CONDUITS OR CONDUITS FILLED WITH LESS THAN THE MAXIMUM ALLOWED FILL RATIO SHALL HAVE A PULL STRING INSTALLED AND LEFT FOR FUTURE PULLING OF CABLE. CLEARLY LABEL AS "PULL STRING" INDICATING OPPOSITE END LOCATION.

TECHNOLOGY FLOOR PLAN KEYED NOTES

1. (1) 2-INCH EMT CONDUIT SLEEVE ABOVE ACCESSIBLE CEILING WITH NYLON BUSHING ON EACH END AND SECURED TO WALL. CONDUIT SLEEVE SHALL BE USED FOR LOW VOLTAGE TECHNOLOGY CABLE ONLY.
2. (2) 2-INCH EMT CONDUIT SLEEVES ABOVE ACCESSIBLE CEILING WITH NYLON BUSHING ON EACH END AND SECURED TO WALL. CONDUIT SLEEVES SHALL BE USED FOR LOW VOLTAGE TECHNOLOGY CABLE ONLY.
3. (3) 2-INCH EMT CONDUIT SLEEVES ABOVE ACCESSIBLE CEILING WITH NYLON BUSHING ON EACH END AND SECURED TO WALL. CONDUIT SLEEVES SHALL BE USED FOR LOW VOLTAGE TECHNOLOGY CABLE ONLY.
4. (4) 4-INCH EMT CONDUIT SLEEVES ABOVE ACCESSIBLE CEILING WITH NYLON BUSHINGS ON EACH END AND SECURED TO WALL. CONDUIT SLEEVES SHALL BE USED FOR LOW VOLTAGE TECHNOLOGY CABLE ONLY.
5. (4) 4-INCH EZ-PATH SLEEVES ABOVE ACCESSIBLE CEILING WITH NYLON BUSHING ON EACH END AND SECURED TO WALL. CONDUIT SLEEVES SHALL BE PROPERLY SEALED ON THE EXTERIOR AND INTERIOR TO RETURN WALL BACK TO ORIGINAL RATING. IF THE WALL IS NOT RATED, THE EZ PATH SLEEVES SHALL BE PROPERLY SEALED ON THE EXTERIOR AND INTERIOR TO REDUCE NOISE TRAVELING THROUGH PENETRATIONS. CONDUIT SLEEVES SHALL BE USED FOR LOW VOLTAGE DATA, VOICE, VIDEO, AND SECURITY CABLE ONLY. (BY DIV. 26)
6. 18-INCH WIDE X 4-INCH HIGH WIRE BASKET TYPE CABLE TRAY ABOVE ACCESSIBLE CEILING AND SUSPENDED FROM THE STRUCTURE USING A TRAPEZE CONFIGURATION. CONTRACTOR SHALL COORDINATE WITH THE GC AND OTHER TRADES TO EXACT PLACEMENT OF THE CABLE TRAY THROUGH THE CORRIDORS PRIOR TO INSTALLATION. (BY DIV 26)
7. DATA CABLE WITH 20-FEET OF SLACK NEATLY COILED AND STORED ON J-HOOK ABOVE ACCESSIBLE CEILING FOR OWNER PROVIDED / CONTRACTOR INSTALLED CEILING MOUNTED WIRELESS ACCESS POINT. CONTRACTOR SHALL PLACE A GREEN ADHESIVE DOT AND A LABEL MIRRORING THE LABEL ON THE SURFACE MOUNTED BOX ON THE CEILING GRID DIRECTLY BELOW THE OUTLET LOCATION FOR FUTURE IDENTIFICATION OF THE OUTLET LOCATION. (BY DIV 27)
8. DATA CABLE FOR OWNER PROVIDED / CONTRACTOR INSTALLED INTERIOR WALL MOUNTED WIRELESS ACCESS POINT WHERE THERE IS AN ACCESSIBLE CEILING. DATA CABLE SHALL BE TERMINATED WITH A SURFACE MOUNTED BOX LOCATED INSIDE THE WIRELESS ACCESS POINT ROUGH-IN. (BY DIV 26)
9. DATA CABLE WITH 20-FEET OF SLACK NEATLY COILED AND STORED ON J-HOOK ABOVE ACCESSIBLE CEILING FOR OWNER PROVIDED / CONTRACTOR INSTALLED EXTERIOR WALL MOUNTED WIRELESS ACCESS POINT WHERE THERE IS AN ACCESSIBLE CEILING. CONTRACTOR SHALL PLACE A GREEN ADHESIVE DOT AND A LABEL MIRRORING THE LABEL ON THE SURFACE MOUNTED BOX ON THE CEILING GRID DIRECTLY BELOW THE OUTLET LOCATION FOR FUTURE IDENTIFICATION OF THE OUTLET LOCATION. (BY DIV 27)
10. DATA CABLE FOR OWNER PROVIDED / CONTRACTOR INSTALLED EXTERIOR WALL MOUNTED WIRELESS ACCESS POINT WHERE THERE IS AN ACCESSIBLE CEILING. DATA CABLE SHALL BE TERMINATED WITH A SURFACE MOUNTED BOX LOCATED INSIDE THE WIRELESS ACCESS POINT ROUGH-IN. CONTRACTOR SHALL PROVIDE AND INSTALL OBERON MODEL NUMBER 1020 RAB PROTECTIVE COVER FOR THE WIRELESS ACCESS POINT. (BY DIV 27)
11. DATA CABLE WITH 20-FEET OF SLACK NEATLY COILED AND STORED ON J-HOOK ABOVE ACCESSIBLE CEILING FOR OWNER PROVIDED / CONTRACTOR INSTALLED CEILING MOUNTED VIDEO SURVEILLANCE CAMERA. CONTRACTOR SHALL PLACE A YELLOW ADHESIVE DOT AND A LABEL MIRRORING THE LABEL ON THE SURFACE MOUNTED BOX ON THE CEILING GRID DIRECTLY BELOW THE OUTLET LOCATION FOR FUTURE IDENTIFICATION OF THE OUTLET LOCATION. REFER TO SECURITY DRAWINGS FOR EXACT LOCATION AND CONDUIT ROUGH-IN REQUIREMENTS. (BY DIV 26)
12. DATA CABLE WITH 20-FEET OF SLACK NEATLY COILED AND STORED ON J-HOOK ABOVE ACCESSIBLE CEILING FOR EXTERIOR WALL MOUNTED VIDEO SURVEILLANCE CAMERA WHERE THERE IS AN ACCESSIBLE CEILING. CONTRACTOR SHALL PLACE A YELLOW ADHESIVE DOT AND A LABEL MIRRORING THE LABEL ON THE SURFACE MOUNTED BOX ON THE CEILING GRID DIRECTLY BELOW THE OUTLET LOCATION FOR FUTURE IDENTIFICATION OF THE OUTLET LOCATION. REFER TO SECURITY DRAWINGS FOR EXACT LOCATION AND CONDUIT ROUGH-IN REQUIREMENTS. (BY DIV 27)
13. DATA CABLE FOR EXTERIOR WALL MOUNTED VIDEO SURVEILLANCE CAMERA WHERE THERE IS NOT AN ACCESSIBLE CEILING. DATA CABLE SHALL BE TERMINATED WITH A SURFACE MOUNTED BOX LOCATED INSIDE THE CAMERA ROUGH-IN. REFER TO SECURITY DRAWINGS FOR EXACT LOCATION AND CONDUIT ROUGH-IN REQUIREMENTS.
14. DATA CABLE FOR OWNER PROVIDED / CONTRACTOR INSTALLED INTERIOR WALL MOUNTED VIDEO SURVEILLANCE CAMERA WHERE THERE IS NOT AN ACCESSIBLE CEILING. DATA CABLE SHALL BE TERMINATED WITH A SURFACE MOUNTED BOX LOCATED INSIDE THE CAMERA ROUGH-IN. REFER TO SECURITY DRAWINGS FOR EXACT LOCATION AND CONDUIT ROUGH-IN REQUIREMENTS. (BY DIV 26)
15. DATA CABLES FOR CONTRACTOR PROVIDED / CONTRACTOR INSTALLED ACCESS CONTROL SECURITY PANEL. REFER TO SECURITY DRAWINGS FOR EXACT LOCATION AND CONDUIT ROUGH-IN REQUIREMENTS. (BY DIV 26)
16. DATA CABLE FOR VENDING MACHINES, COORDINATE WITH OWNER FOR EXACT LOCATION.
17. DATA CABLE FOR MECHANICAL CONTROLS. COORDINATE EXACT LOCATION FOR CONDUIT ROUGH-IN AND TERMINATION REQUIREMENTS WITH THE MECHANICAL CONTRACTOR PRIOR TO INSTALLATION. CONDUIT SHALL BE HOME RUN TO IDF ROOM 2.127. (BY DIV 26)
18. VOICE CABLE FOR ELEVATOR EMERGENCY TELEPHONE. COORDINATE EXACT LOCATION FOR CONDUIT ROUGH-IN AND TERMINATION REQUIREMENTS WITH THE ELEVATOR CONTRACTOR PRIOR TO INSTALLATION. REFERENCE ARCHITECTURAL, MECHANICAL AND ELECTRICAL DRAWINGS FOR EXACT CONDUIT ROUGH-IN LOCATION, HEIGHT AND TERMINATION REQUIREMENTS. (BY DIV 26)
19. DATA CABLE FOR ELEVATOR CONTROLS. (1) CABLE FOR ELEVATOR E-PHONE, (1) CABLE FOR BAS AND (1) CABLE FOR BACKUP. COORDINATE EXACT LOCATION FOR CONDUIT ROUGH-IN AND TERMINATION REQUIREMENTS WITH THE ELEVATOR CONTRACTOR PRIOR TO INSTALLATION. REFERENCE ARCHITECURAL, MECHANICAL AND ELECTRICAL DRAWINGS FOR EXACT CONDUIT ROUGH-IN LOCATION, HEIGHT AND TERMINATIONS. (BY DIV 26)
20. VOICE CABLE FOR FIRE ALARM PANEL. COORDINATE EXACT LOCATION FOR CONDUIT ROUGH-IN AND TERMINATION REQUIREMENTS WITH THE FIRE ALARM CONTRACTOR PRIOR TO INSTALLATION. REFERENCE ARCHITECURAL, MECHANICAL AND ELECTRICAL DRAWINGS FOR EXACT CONDUIT ROUGH-IN LOCATION, HEIGHT AND TERMINATIONS. (BY DIV 26)
21. DATA CABLE FOR OWNER PROVIDED OWNER INSTALLED WALL MOUNTED FLAT PANEL DISPLAY. (BY DIV 27)
22. FLOOR BOX AS SPECIFIED BY DIVISION 26. PROVIDE (1) 2- INCH CONDUIT DEDICATED FOR DATA CABLE AND (1) 1 ¼- INCH CONDUIT DEDICATED FOR AUDIO VISUAL CABLE FROM THE POKE THROUGH TO ABOVE ACCESSIBLE CEILING IN THE SAME ROOM WHERE THE FLOOR BOX IS LOCATED. REFER TO ARCHITECTURAL AND ELECTRICAL DRAWINGS FOR EXACT LOCATION AND ADDITIONAL CONDUIT ROUGH-IN REQUIREMENTS PRIOR TO INSTALLATION.(BY DIV 26)
23. DATA CABLE WITH 20-FEET OF SLACK NEATLY COILED AND STORED ON J-HOOK ABOVE ACCESSIBLE CEILING FOR OWNER PROVIDED / OWNER INSTALLED CEILING MOUNTED PROJECTOR. CONTRACTOR SHALL PLACE A PURPLE ADHESIVE DOT AND A LABEL MIRRORING THE LABEL ON THE SURFACE MOUNTED BOX ON THE CEILING GRID DIRECTLY BELOW THE OUTLET LOCATION FOR FUTURE IDENTIFICATION OF THE OUTLET LOCATION. REFER TO AUDIO | VISUAL DRAWINGS FOR EXACT LOCATION AND CONDUIT ROUGH-IN REQUIREMENTS. (BY DIV 27)
24. DATA CABLE FOR IRRIGATION CONTROLS. REFER TO LANDSCAPE DRAWINGS FOR EXACT LOCATION AND CONDUIT ROUGH-IN REQUIREMENTS. (BY DIV 26)
25. APPROXIMATE LOCATION OF CONTRACTOR PROVIDED CONTRACTOR INSTALLED POWERED PROJECTOR SCREEN. THE MEP DESIGNER SHALL PROVIDE THE DESIGN FOR POWER AND PROJECTOR CONTROLS. (BY OTHERS)
26. APPROXIMATE LOCATION OF PROJECTOR SCREEN CONTROL SWITCH. (BY OTHERS)
27. DATA CABLE FOR SHARK METER. COORDINATE EXACT LOCATION FOR CONDUIT ROUGH-IN AND TERMINATION REQUIREMENTS WITH THE MECHANICAL CONTRACTOR PRIOR TO INSTALLATION. CONDUIT SHALL BE HOME RUN TO THE MDF ROOM. (BY DIV 26)
28. EMPTY ROUGH IN FOR OWNER PROVIDED OWNER INSTALLED CONTROL PANEL. (BY DIV 26)
29. DATA CABLE FOR OWNER PROVIDED / OWNER INSTALLED TIME CLOCK. (BY DIV 26)
30. DTA ROUGH IN FOR AUDIO VISUAL RACK. CONTRACTOR SHALL PROVIDE CHIEF PART NUMBER PAC526FCW AT THIS LOCATION. (BY DIV 26)
31. DATA CABLE FOR SIGN. COORDINATE EXACT LOCATION FOR CONDUIT ROUGH-IN AND TERMINATION REQUIREMENTS WITH THE COFFE BAR OPERATOR PRIOR TO INSTALLATION. (BY DIV 26)
32. DATA CABLE FOR OWNER PROVIDED / OWNER INSTALLED COPIER. (BY DIV 26)
33. DATA CABLE FIRE ALARM PANEL. COORDINATE EXACT LOCATION FOR CONDUIT ROUGH-IN AND TERMINATION REQUIREMENTS WITH THE FIRE ALARM CONTRACTOR PRIOR TO INSTALLATION. CONDUIT SHALL BE HOME RUN TO THE MDF ROOM. (BY DIV 26)
34. DATA CABLE FAWC PANEL. COORDINATE EXACT LOCATION FOR CONDUIT ROUGH-IN AND TERMINATION REQUIREMENTS WITH THE FIRE ALARM CONTRACTOR PRIOR TO INSTALLATION. CONDUIT SHALL BE HOME RUN TO THE MDF ROOM. (BY DIV 26)
35. DATA CABLE E-MON METER. COORDINATE EXACT LOCATION FOR CONDUIT ROUGH-IN AND TERMINATION REQUIREMENTS WITH THE MECHANICAL CONTRACTOR PRIOR TO INSTALLATION. CONDUIT SHALL BE HOME RUN TO THE MDF ROOM. (BY DIV 26)

muñoz & company
1017 NORTH MAIN SUITE 300
SAN ANTONIO, TEXAS 78212
O. 210.349.1163 F. 210.525.1038
WWW.MUNOZ-CO.COM

COMBS Consulting Group
10 years
technology & security
SAN ANTONIO
8200 IH-10 West, Ste. 103
San Antonio, Texas 78230
Phone : 210-698-7887
AUSTIN
4425 S. Mopac
Bldg. 4, Ste. 800
Austin, Texas 78735

REGISTERED COMMUNICATIONS DISTRIBUTION DESIGNER
Bicsi
BILL E HENRICH
REG. No. 191959R
EXPIRES 12-31-19
SIGNATURE
11-6-2018

UTRGV
The University of Texas Rio Grande Valley

UNIVERSITY OF TEXAS RIO GRANDE VALLEY
SCHOOL OF MEDICINE
TEAM BASED LEARNING CENTER

PROJECT NO: 903-1159
EDINBURG, TX
100% CONSTRUCTION DOCUMENTS

Issue/Revision

#	DESCRIPTION	DATE

Sheet Title
TECHNOLOGY LEVEL ONE - FLOOR PLAN

BP2

Date
NOVEMBER 08, 2018

Project Number	Drawn By	Checked By
A17021.00	PM	DR

Sheet Number
T-201

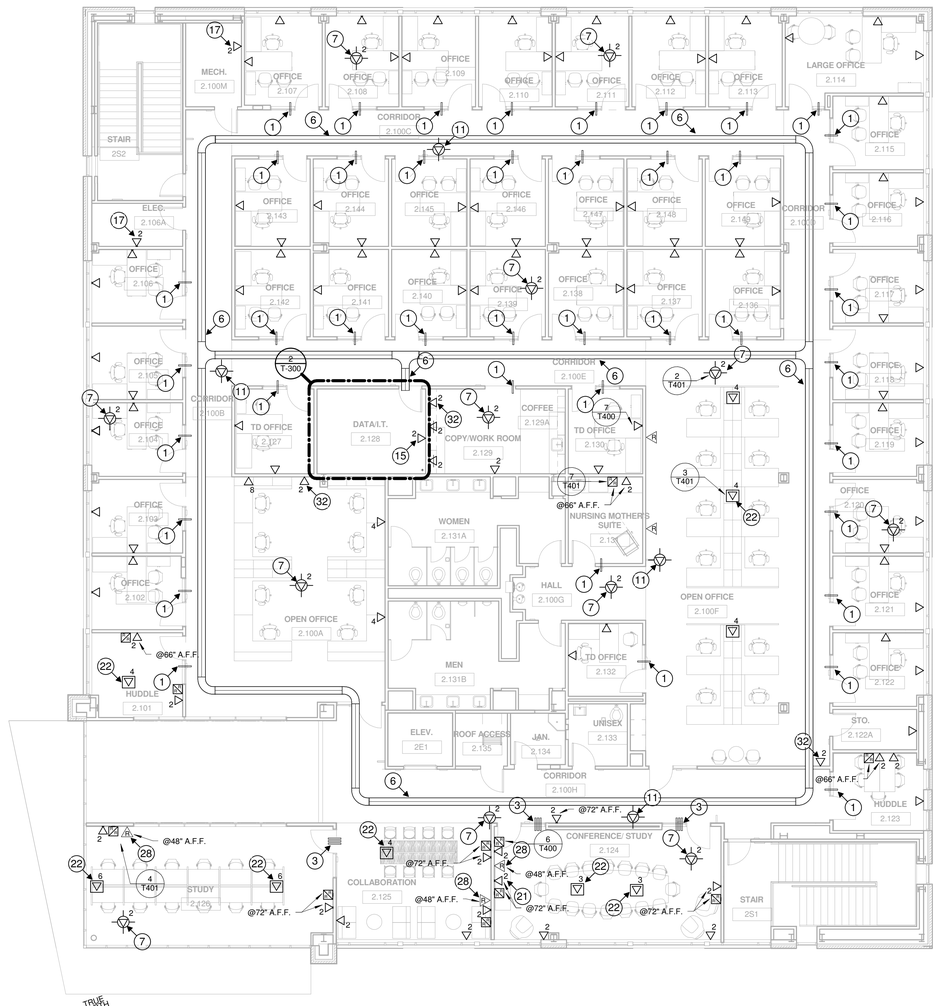

1 TECHNOLOGY LEVEL TWO - FLOOR PLAN
1/8" = 1'-0"

GENERAL NOTES

1. THE TECHNOLOGY REGION / WIRING BOUNDARIES ARE IDENTIFIED ON THE OVERALL SHEETS ONLY AND NOT ON THE ENLARGED SHEETS. CONTRACTOR SHALL REFER TO THE OVERALL SHEETS FOR ALL TECHNOLOGY REGIONS / WIRING BOUNDARIES.
2. ALL CONDUIT PATHWAYS, ROUGH-INS, BACKBOXES, FLOOR BOXES, CONDUIT SLEEVES, ETC. INDICATED ON THE TECHNOLOGY DRAWINGS ARE TO BE PROVIDED AND INSTALLED BY DIVISION 26.
3. ALL POWER INDICATED ON THE TECHNOLOGY DRAWINGS IS TO BE PROVIDED AND INSTALLED BY DIVISION 26.
4. CONTRACTOR SHALL RESTORE ALL PENETRATIONS PROVIDED THROUGH FIRE RATED WALLS/STRUCTURES FOR TECHNOLOGY CABLING BACK TO THE ORIGINAL RATING.
5. CONTRACTOR SHALL RESTORE ALL PENETRATIONS PROVIDED THROUGH NON-RATED WALLS/STRUCTURES FOR TECHNOLOGY CABLING FOR SOUND TO REDUCE NOISE TRAVELING THROUGH PENETRATIONS.
6. TECHNOLOGY CABLING SHALL BE ROUTED IN SEPARATE PATHWAYS IN J-HOOKS, CONDUITS, CONDUIT SLEEVES, CORES, ETC. THROUGHOUT THE ENTIRE PATHWAY. DIFFERENT MEDIA TYPES (DATA, VIDEO, SECURITY, ETC.) SHALL NOT SHARE THE SAME J-HOOK, CONDUIT, CONDUIT SLEEVE, CORE, ETC.
7. UNLESS NOTED OTHERWISE, ALL CONDUITS FOR TECHNOLOGY DEVICES SHALL ROUTE FROM THE DEVICE LOCATION AND TERMINATE ABOVE AN ACCESSIBLE CEILING (AN OPEN CEILING IS NOT CONSIDERED AN ACCESSIBLE CEILING) IN THE SAME ROOM WHERE THE DEVICE IS LOCATED. IF THE ROOM WHERE THE DEVICE IS LOCATED DOES NOT HAVE AN ACCESSIBLE CEILING, THE CONDUIT SHALL ROUTE TO THE NEAREST ACCESSIBLE CEILING OFF A MAIN CORRIDOR. CONDUIT PATHWAY SHALL TAKE THE SHORTEST ROUTE TO THE APPLICABLE MDF / IDF ROOM TO MINIMIZE THE CABLE LENGTH ENSURING CABLE LENGTH DOES NOT EXCEED 275FEET.
8. UNLESS NOTED OTHERWISE ALL CONDUITS SHALL BE HOMERUN FROM THE DEVICE LOCATION AND NO DAISY CHAINING OF DEVICES / ROUGH-INS SHALL BE ALLOWED.
9. CONDUIT SEGMENTS SHALL BE NO MORE THAN 100-FEET IN LENGTH WITH NO MORE THAN THE EQUIVALENT OF (2) 90 DEGREE BENDS BETWEEN PULLING POINTS.
10. CONDUITS SHALL MAINTAIN A BEND RADIUS OF 6 TIMES THE DIAMETER OF THE CONDUIT FOR CONDUITS 2-INCHES OR SMALLER AND 10 TIMES THE DIAMETER OF THE CONDUIT FOR CONDUITS GREATER THAN 2-INCHES.
11. ALL CONDUITS SHALL HAVE A PULL STRING INSTALLED FOR PULLING OF CABLE. CLEARLY LABEL AS "PULL STRING" INDICATING OPPOSITE END LOCATION.
12. ALL SPARE CONDUITS OR CONDUITS FILLED WITH LESS THAN THE MAXIMUM ALLOWED FILL RATIO SHALL HAVE A PULL STRING INSTALLED AND LEFT FOR FUTURE PULLING OF CABLE. CLEARLY LABEL AS "PULL STRING" INDICATING OPPOSITE END LOCATION.

TECHNOLOGY FLOOR PLAN KEYED NOTES

1. (1) 2-INCH EMT CONDUIT SLEEVE ABOVE ACCESSIBLE CEILING WITH NYLON BUSHING ON EACH END AND SECURED TO WALL. CONDUIT SLEEVE SHALL BE USED FOR LOW VOLTAGE TECHNOLOGY CABLE ONLY.
2. (2) 2-INCH EMT CONDUIT SLEEVES ABOVE ACCESSIBLE CEILING WITH NYLON BUSHING ON EACH END AND SECURED TO WALL. CONDUIT SLEEVES SHALL BE USED FOR LOW VOLTAGE TECHNOLOGY CABLE ONLY.
3. (3) 2-INCH EMT CONDUIT SLEEVES ABOVE ACCESSIBLE CEILING WITH NYLON BUSHING ON EACH END AND SECURED TO WALL. CONDUIT SLEEVES SHALL BE USED FOR LOW VOLTAGE TECHNOLOGY CABLE ONLY.
4. (4) 4-INCH EMT CONDUIT SLEEVES ABOVE ACCESSIBLE CEILING WITH NYLON BUSHINGS ON EACH END AND SECURED TO WALL. CONDUIT SLEEVES SHALL BE USED FOR LOW VOLTAGE TECHNOLOGY CABLE ONLY.
5. (4) 4-INCH EZ-PATH SLEEVES ABOVE ACCESSIBLE CEILING WITH NYLON BUSHING ON EACH END AND SECURED TO WALL. CONDUIT SLEEVES SHALL BE PROPERLY SEALED ON THE EXTERIOR AND INTERIOR TO RETURN WALL BACK TO ORIGINAL RATING. IF THE WALL IS NOT RATED, THE EZ PATH SLEEVES SHALL BE PROPERLY SEALED ON THE EXTERIOR AND INTERIOR TO REDUCE NOISE TRAVELING THROUGH PENETRATIONS. CONDUIT SLEEVES SHALL BE USED FOR LOW VOLTAGE DATA, VOICE, VIDEO, AND SECURITY CABLE ONLY. (BY DIV. 26)
6. 18-INCH WIDE X 4-INCH HIGH WIRE BASKET TYPE CABLE TRAY ABOVE ACCESSIBLE CEILING AND SUSPENDED FROM THE STRUCTURE USING A TRAPEZE CONFIGURATION. CONTRACTOR SHALL COORDINATE WITH THE GC AND OTHER TRADES TO EXACT PLACEMENT OF THE CABLE TRAY THROUGH THE CORRIDORS PRIOR TO INSTALLATION. (BY DIV 26)
7. DATA CABLE WITH 20-FEET OF SLACK NEATLY COILED AND STORED ON J-HOOK ABOVE ACCESSIBLE CEILING FOR OWNER PROVIDED / CONTRACTOR INSTALLED CEILING MOUNTED WIRELESS ACCESS POINT. CONTRACTOR SHALL PLACE A GREEN ADHESIVE DOT AND A LABEL MIRRORING THE LABEL ON THE SURFACE MOUNTED BOX ON THE CEILING GRID DIRECTLY BELOW THE OUTLET LOCATION FOR FUTURE IDENTIFICATION OF THE OUTLET LOCATION. (BY DIV 27)
8. DATA CABLE FOR OWNER PROVIDED / CONTRACTOR INSTALLED INTERIOR WALL MOUNTED WIRELESS ACCESS POINT WHERE THERE IS AN ACCESSIBLE CEILING. DATA CABLE SHALL BE TERMINATED WITH A SURFACE MOUNTED BOX LOCATED INSIDE THE WIRELESS ACCESS POINT ROUGH-IN. (BY DIV 26)
9. DATA CABLE WITH 20-FEET OF SLACK NEATLY COILED AND STORED ON J-HOOK ABOVE ACCESSIBLE CEILING FOR OWNER PROVIDED / CONTRACTOR INSTALLED EXTERIOR WALL MOUNTED WIRELESS ACCESS POINT WHERE THERE IS AN ACCESSIBLE CEILING. CONTRACTOR SHALL PLACE A GREEN ADHESIVE DOT AND A LABEL MIRRORING THE LABEL ON THE SURFACE MOUNTED BOX ON THE CEILING GRID DIRECTLY BELOW THE OUTLET LOCATION FOR FUTURE IDENTIFICATION OF THE OUTLET LOCATION. (BY DIV 27)
10. DATA CABLE FOR OWNER PROVIDED / CONTRACTOR INSTALLED EXTERIOR WALL MOUNTED WIRELESS ACCESS POINT WHERE THERE IS AN ACCESSIBLE CEILING. DATA CABLE SHALL BE TERMINATED WITH A SURFACE MOUNTED BOX LOCATED INSIDE THE WIRELESS ACCESS POINT ROUGH-IN. CONTRACTOR SHALL PROVIDE AND INSTALL OBERON MODEL NUMBER 1020 RAB PROTECTIVE COVER FOR THE WIRELESS ACCESS POINT. (BY DIV 27)
11. DATA CABLE WITH 20-FEET OF SLACK NEATLY COILED AND STORED ON J-HOOK ABOVE ACCESSIBLE CEILING FOR OWNER PROVIDED / CONTRACTOR INSTALLED CEILING MOUNTED VIDEO SURVEILLANCE CAMERA. CONTRACTOR SHALL PLACE A YELLOW ADHESIVE DOT AND A LABEL MIRRORING THE LABEL ON THE SURFACE MOUNTED BOX ON THE CEILING GRID DIRECTLY BELOW THE OUTLET LOCATION FOR FUTURE IDENTIFICATION OF THE OUTLET LOCATION. REFER TO SECURITY DRAWINGS FOR EXACT LOCATION AND CONDUIT ROUGH-IN REQUIREMENTS. (BY DIV 26)
12. DATA CABLE WITH 20-FEET OF SLACK NEATLY COILED AND STORED ON J-HOOK ABOVE ACCESSIBLE CEILING FOR EXTERIOR WALL MOUNTED VIDEO SURVEILLANCE CAMERA WHERE THERE IS AN ACCESSIBLE CEILING. CONTRACTOR SHALL PLACE A YELLOW ADHESIVE DOT AND A LABEL MIRRORING THE LABEL ON THE SURFACE MOUNTED BOX ON THE CEILING GRID DIRECTLY BELOW THE OUTLET LOCATION FOR FUTURE IDENTIFICATION OF THE OUTLET LOCATION. REFER TO SECURITY DRAWINGS FOR EXACT LOCATION AND CONDUIT ROUGH-IN REQUIREMENTS. (BY DIV 27)
13. DATA CABLE FOR EXTERIOR WALL MOUNTED VIDEO SURVEILLANCE CAMERA WHERE THERE IS NOT AN ACCESSIBLE CEILING. DATA CABLE SHALL BE TERMINATED WITH A SURFACE MOUNTED BOX LOCATED INSIDE THE CAMERA ROUGH-IN. REFER TO SECURITY DRAWINGS FOR EXACT LOCATION AND CONDUIT ROUGH-IN REQUIREMENTS.
14. DATA CABLE FOR OWNER PROVIDED / CONTRACTOR INSTALLED INTERIOR WALL MOUNTED VIDEO SURVEILLANCE CAMERA WHERE THERE IS NOT AN ACCESSIBLE CEILING. DATA CABLE SHALL BE TERMINATED WITH A SURFACE MOUNTED BOX LOCATED INSIDE THE CAMERA ROUGH-IN. REFER TO SECURITY DRAWINGS FOR EXACT LOCATION AND CONDUIT ROUGH-IN REQUIREMENTS. (BY DIV 26)
15. DATA CABLES FOR CONTRACTOR PROVIDED / CONTRACTOR INSTALLED ACCESS CONTROL SECURITY PANEL. REFER TO SECURITY DRAWINGS FOR EXACT LOCATION AND CONDUIT ROUGH-IN REQUIREMENTS. (BY DIV 26)
16. DATA CABLE FOR VENDING MACHINES, COORDINATE WITH OWNER FOR EXACT LOCATION.
17. DATA CABLE FOR MECHANICAL CONTROLS. COORDINATE EXACT LOCATION FOR CONDUIT ROUGH-IN AND TERMINATION REQUIREMENTS WITH THE MECHANICAL CONTRACTOR PRIOR TO INSTALLATION. CONDUIT SHALL BE HOME RUN TO IDF ROOM 2.127. (BY DIV 26)
18. VOICE CABLE FOR ELEVATOR EMERGENCY TELEPHONE. COORDINATE EXACT LOCATION FOR CONDUIT ROUGH-IN AND TERMINATION REQUIREMENTS WITH THE ELEVATOR CONTRACTOR PRIOR TO INSTALLATION. REFERENCE ARCHITECTURAL, MECHANICAL AND ELECTRICAL DRAWINGS FOR EXACT CONDUIT ROUGH-IN LOCATION, HEIGHT AND TERMINATION REQUIREMENTS. (BY DIV 26)
19. DATA CABLE FOR ELEVATOR CONTROLS. (1) CABLE FOR ELEVATOR E-PHONE, (1) CABLE FOR BAS AND (1) CABLE FOR BACKUP. COORDINATE EXACT LOCATION FOR CONDUIT ROUGH-IN AND TERMINATION REQUIREMENTS WITH THE ELEVATOR CONTRACTOR PRIOR TO INSTALLATION. REFERENCE ARCHITECURAL, MECHANICAL AND ELECTRICAL DRAWINGS FOR EXACT CONDUIT ROUGH-IN LOCATION, HEIGHT AND TERMINATIONS. (BY DIV 26)
20. VOICE CABLE FOR FIRE ALARM PANEL. COORDINATE EXACT LOCATION FOR CONDUIT ROUGH-IN AND TERMINATION REQUIREMENTS WITH THE FIRE ALARM CONTRACTOR PRIOR TO INSTALLATION. REFERENCE ARCHITECURAL, MECHANICAL AND ELECTRICAL DRAWINGS FOR EXACT CONDUIT ROUGH-IN LOCATION, HEIGHT AND TERMINATIONS. (BY DIV 26)
21. DATA CABLE FOR OWNER PROVIDED OWNER INSTALLED WALL MOUNTED FLAT PANEL DISPLAY. (BY DIV 27)
22. FLOOR BOX AS SPECIFIED BY DIVISION 26. PROVIDE (1) 2- INCH CONDUIT DEDICATED FOR DATA CABLE AND (1) 1 1/4- INCH CONDUIT DEDICATED FOR AUDIO VISUAL CABLE FROM THE POKE THROUGH TO ABOVE ACCESSIBLE CEILING IN THE SAME ROOM WHERE THE FLOOR BOX IS LOCATED. REFER TO ARCHITECTURAL AND ELECTRICAL DRAWINGS FOR EXACT LOCATION AND ADDITIONAL CONDUIT ROUGH-IN REQUIREMENTS PRIOR TO INSTALLATION.(BY DIV 26)
23. DATA CABLE WITH 20-FEET OF SLACK NEATLY COILED AND STORED ON J-HOOK ABOVE ACCESSIBLE CEILING FOR OWNER PROVIDED / OWNER INSTALLED CEILING MOUNTED PROJECTOR. CONTRACTOR SHALL PLACE A PURPLE ADHESIVE DOT AND A LABEL MIRRORING THE LABEL ON THE SURFACE MOUNTED BOX ON THE CEILING GRID DIRECTLY BELOW THE OUTLET LOCATION FOR FUTURE IDENTIFICATION OF THE OUTLET LOCATION. REFER TO AUDIO) VISUAL DRAWINGS FOR EXACT LOCATION AND CONDUIT ROUGH-IN REQUIREMENTS. (BY DIV 27)
24. DATA CABLE FOR IRRIGATION CONTROLS. REFER TO LANDSCAPE DRAWINGS FOR EXACT LOCATION AND CONDUIT ROUGH-IN REQUIREMENTS. (BY DIV 26)
25. APPROXIMATE LOCATION OF CONTRACTOR PROVIDED CONTRACTOR INSTALLED POWERED PROJECTOR SCREEN. THE MEP DESIGNER SHALL PROVIDE THE DESIGN FOR POWER AND PROJECTOR CONTROLS. (BY OTHERS)
26. APPROXIMATE LOCATION OF PROJECTOR SCREEN CONTROL SWITCH. (BY OTHERS)
27. DATA CABLE FOR SHARK METER. COORDINATE EXACT LOCATION FOR CONDUIT ROUGH-IN AND TERMINATION REQUIREMENTS WITH THE MECHANICAL CONTRACTOR PRIOR TO INSTALLATION. CONDUIT SHALL BE HOME RUN TO THE MDF ROOM. (BY DIV 26)
28. EMPTY ROUGH IN FOR OWNER PROVIDED OWNER INSTALLED CONTROL PANEL. (BY DIV 26)
29. DATA CABLE FOR OWNER PROVIDED / OWNER INSTALLED TIME CLOCK. (BY DIV 26)
30. DTA ROUGH IN FOR AUDIO VISUAL RACK. CONTRACTOR SHALL PROVIDE CHIEF PART NUMBER PAC526FCW AT THIS LOCATION. (BY DIV 26)
31. DATA CABLE FOR SIGN. COORDINATE EXACT LOCATION FOR CONDUIT ROUGH-IN AND TERMINATION REQUIREMENTS WITH THE COFFE BAR OPERATOR PRIOR TO INSTALLATION. (BY DIV 26)
32. DATA CABLE FOR OWNER PROVIDED / OWNER INSTALLED COPIER. (BY DIV 26)
33. DATA CABLE FIRE ALARM PANEL. COORDINATE EXACT LOCATION FOR CONDUIT ROUGH-IN AND TERMINATION REQUIREMENTS WITH THE FIRE ALARM CONTRACTOR PRIOR TO INSTALLATION. CONDUIT SHALL BE HOME RUN TO THE MDF ROOM. (BY DIV 26)
34. DATA CABLE FAWC PANEL. COORDINATE EXACT LOCATION FOR CONDUIT ROUGH-IN AND TERMINATION REQUIREMENTS WITH THE FIRE ALARM CONTRACTOR PRIOR TO INSTALLATION. CONDUIT SHALL BE HOME RUN TO THE MDF ROOM. (BY DIV 26)
35. DATA CABLE E-MON METER. COORDINATE EXACT LOCATION FOR CONDUIT ROUGH-IN AND TERMINATION REQUIREMENTS WITH THE MECHANICAL CONTRACTOR PRIOR TO INSTALLATION. CONDUIT SHALL BE HOME RUN TO THE MDF ROOM. (BY DIV 26)

muñoz & company
1017 NORTH MAIN SUITE 300
SAN ANTONIO, TEXAS 78212
O. 210.349.1163 F. 210.525.1038
WWW.MUNOZ-CO.COM

COMBS Consulting Group
10 years
technology & security
SAN ANTONIO
8200 IH-10 West, Ste. 103
San Antonio, Texas 78230
Phone : 210-698-7887
AUSTIN
4425 S. Mopac
Bldg. 4, Ste. 800
Austin, Texas 78735

REGISTERED COMMUNICATIONS DISTRIBUTION DESIGNER
Bicsi
BILL E HENRICH
REG. No. 191959R
EXPIRES 12-31-19
SIGNATURE
11-6-2018

UTRGV
The University of Texas Rio Grande Valley

UNIVERSITY OF TEXAS RIO GRANDE VALLEY
SCHOOL OF MEDICINE
TEAM BASED LEARNING CENTER

PROJECT NO: 903-1159
EDINBURG, TX
100% CONSTRUCTION DOCUMENTS

Issue/Revision

#	DESCRIPTION	DATE

Sheet Title
TECHNOLOGY LEVEL TWO - FLOOR PLAN

BP2

Date
NOVEMBER 08, 2018

Project Number	Drawn By	Checked By
A17021.00	PM	DR

Sheet Number
T-202

SECURITY ROOM 1.112 KEYED NOTES

1. 4-FEET X 8-FEET X ¾-INCH BC GRADE FIRE RATED PLYWOOD INSTALLED VERTICALLY STARTING AT 24-IN ABOVE FINISHED FLOOR. PAINT WITH (2) COATS OF FIRE RETARDANT PAINT. PAINT COLOR SHALL BE APPROVED BY THE ARCHITECT/ENGINEER PRIOR TO PAINTING. CONTRACTOR SHALL INSTALL THE 1ST SHEET NEAR THE DOOR WITH THE STAMP SHOWING. ALL OTHER SHEETS SHALL HAVE THE STAMP NOT SHOWING. CONTRACTOR SHALL INSTALL THE PLYWOOD WITH THE SMMOTHEST SIDE FACING INBOARD. (BY DIV. 27)
2. 18-INCH LADDER RACK MOUNTED AT 86-INCHES ABOVE FINISHED FLOOR. (BY DIV. 27)
3. (4) 4-INCH EZ-PATH SLEEVES TO CORRIDOR ABOVE CEILING SPACE EZ-PATH SLEEVE SHALL BE PROPERLY SEALED ON THE EXTERIOR AND INTERIOR TO RETURN WALL BACK TO ORIGINAL RATING. IF THE WALL IS NOT RATED, THE EZ-PATH SLEEVE SHALL BE PROPERLY SEALED ON THE EXTERIOR AND INTERIOR TO REDUCE NOISE TRAVELING THROUGH PENETRATIONS. EZ-PATH SLEEVE SHALL BE USED FOR LOW VOLTAGE DATA, VOICE, AND SECURITY CABLE ONLY. CONTRACTOR SHALL GROUND ALL EZ-PATH SLEEVES TO THE PRIMARY GROUND BAR FOR THE ROOM (BY DIV. 26)
4. 20 AMP CIRCUIT WITH QUAD RECEPTACLE NEMA 5-20R FLUSH MOUNTED TO THE FINISHED WALL SURFACE AT 18-INCHES ABOVE FINISHED FLOOR. (BY DIV. 26)
5. DEDICATED 20 AMP CIRCUIT HARDWIRED TO CONTRACTOR PROVIDED / CONTRACTOR INSTALLED ACCESS CONTROL SYSTEM PANEL. COORDINATE EXACT LOCATION AND TERMINATION REQUIREMENTS WITH OWNER PRIOR TO INSTALLATION. (BY DIV. 26).
6. 48-INCHES X 84-INCHES RESERVED FOR ACCESS CONTROL WIRING FIELD. (BY DIV. 27 / 28)
7. (4) 4-INCH EMT CONDUIT SLEEVES TO 2ND FOOR IDF ROOM 2.124 WITH NYLON BUSHING ON EACH END AND SECURED TO WALL. CONDUIT SLEEVES SHALL BE PROPERLY SEALED ON THE EXTERIOR AND INTERIOR TO RETURN WALL BACK TO ORIGINAL RATING. IF WALL IS NOT RATED, CONDUIT SLEEVE SHALL BE PROPERLY SEALED ON THE EXTERIOR AND INTERIOR TO REDUCE NOISE TRAVELING THROUGH PENETRATIONS. CONDUIT SLEEVES SHALL HAVE GROUNDING COLLARS. CONDUIT SLEEVE SHALL BE USED FOR LOW VOLTAGE BACKBONE AND SECURITY CABLE ONLY. CONTRACTOR SHALL USE GROUND COLLARS AND GROUND ALL SLEEVES TO THE PRIMARY GROUND BAR FOR THE ROOM (BY DIV. 26)
8. (3) NEW 4-INCH CONDUITS FROM THE NEW TELECOMMUNICATION HAND HOLE STUBBED UP INTO THE NEW 30-INCH X 30-INCH X 8-INCH DEEP WALL MOUNTED PULL BOX. CONTRACTOR SHALL ALSO STUB (3) 4-INCH PROVIDE CONDUITS FROM THE 30-INCH X 30-INCH X 8-INCH DEEP PULL BOX 4-INCHES AFF INTO THE 2ND FLOOR IDF ROOM. PROVIDE CONDUITS WITH PULL STRING AND NYLON BUSHINGS AND CAPS ON EACH END. CONTRACTOR SHALL PROVIDE AND INSTALL GROUND COLLARS ON ALL CONDUITS SLEEVES AND GROUND ALL SLEEVES TO THE PRIMARY GROUND BAR FOR THE ROOM (BY DIV. 26)
9. (1) 30-INCH X 30-INCH X 8-INCH DEEP WALL MOUNTED PULL BOX WITH LOCKABLE COVER. (BY DIV 26)
10. GROUND BUS BAR MOUNTED AT 18-INCHES ABOVE FINISHED FLOOR. (BY DIV. 27)
11. APPROXIMATE LOCATION OF NEW VERTICAL LADDER RACK RUNNING UP THE WALL TO SUPPORT THE DRESSIGN OF THE HORIZONTAL CABLES. LADDER RACK SHALL EXTEND THE WIDTH OF THE CONDUITS AND THE ENTRIE DISTANCE UP THE WALL TO SUPPORT THE CABLE BUNDLES. (BY DIV 27)

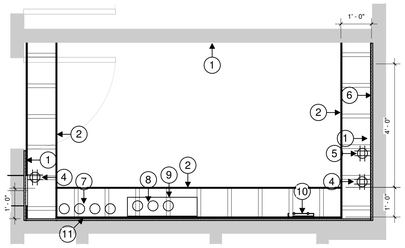

1 SECURITY 1.112 ROOM LAYOUT
1/2" = 1'-0"

DATAIT ROOM 2.127 KEYED NOTES

1. 19-INCH X 84-INCH EQUIPMENT RACK (BY DIV. 27)
2. DOUBLE-SIDED VERTICAL CABLE MANAGER (BY DIV. 27)
3. STARLINE BUS SYSTEM TO NORMAL POWER (BY DIV 26)
4. 3 RU FIBER ENCLOSURE (BY DIV 27)
5. 48 PORT CAT 6 PATCH PANEL (BY DIV 27)
6. 2 RU DOUBLES SIDED HORIZONTAL WIRE MANAGER (BY DIV 27)
7. 48 PORT NETWORK SWITCH (BY OTHERS)
8. POWER STRIP WITH AMP METER (BY DIV 27)
9. 24 PORT CAT 5 PATCH PANEL FOR VOICE CABLING (BY DIV 27)
10. UNINTERUPTABLE POWER SUPPLY/ UPS (BY OTHERS)
11. 4-FEET X 8-FEET X ¾-INCH BC GRADE FIRE RATED PLYWOOD INSTALLED VERTICALLY STARTING AT 24-IN ABOVE FINISHED FLOOR. PAINT WITH (2) COATS OF FIRE RETARDANT PAINT. PAINT COLOR SHALL BE APPROVED BY THE ARCHITECT/ENGINEER PRIOR TO PAINTING. CONTRACTOR SHALL INSTALL THE 1ST SHEET NEAR THE DOOR WITH THE STAMP SHOWING. ALL OTHER SHEETS SHALL HAVE THE STAMP NOT SHOWING. CONTRACTOR SHALL INSTALL THE PLYWOOD WITH THE SMMOTHEST SIDE FACING INBOARD. (BY DIV. 27)
12. 19-INCH X 84-INCH EQUIPMENT RACK WITH VERTICAL CABLE MANAGERS. (BY DIV. 27)
13. 18-INCH LADDER RACK MOUNTED AT 86-INCHES ABOVE FINISHED FLOOR. (BY DIV. 27)
14. (4) 4-INCH EMT CONDUIT SLEEVES TO 1ST FLOOR SECURITY ROOM WITH NYLON BUSHING ON EACH END AND SECURED TO THE FLOOR. CONDUIT SLEEVE SHALL BE PROPERLY SEALED ON THE EXTERIOR AND INTERIOR TO RETURN WALL BACK TO ORIGINAL RATING. IF WALL IS NOT RATED, CONDUIT SLEEVE SHALL BE PROPERLY SEALED ON THE EXTERIOR AND INTERIOR TO REDUCE NOISE TRAVELING THROUGH PENETRATIONS. CONDUIT SLEEVES SHALL HAVE GROUNDING COLLARS. CONDUIT SLEEVE SHALL BE USED FOR LOW VOLTAGE VOICE, DATA AND SECURITY CABLE ONLY. CONTRACTOR SHALL USE GROUND COLLARS AND GROUND ALL SLEEVES TO THE PRIMARY GROUND BAR FOR THE ROOM (BY DIV. 26)
15. GROUND BUS BAR MOUNTED AT 18-INCHES ABOVE FINISHED FLOOR. (BY DIV. 27)
16. STARLINE BUS MOUNTED ABOVE THE EQUIPMENT RACKS ON A 50A BREAKER ON "NORMAL" POWER INITIALLY PROVIDED WITH (1) 208V/20A CIRCUIT BREAKER TERMINATED IN 8- FOOT L620C PIGTAIL. (BY DIV 26)
17. 20 AMP CIRCUIT WITH QUAD RECEPTACLE NEMA 5-20R FLUSH MOUNTED TO THE FINISHED WALL SURFACE AT 18-INCHES ABOVE FINISHED FLOOR. (BY DIV. 26)
18. BUILDING ENTRANCE TERMINAL (BET). (BY DIV 27)
19. 110 WIRING BLOCK FOR CROSS CONNECT. (BY DIV 27)
20. (4) 4-INCH EZ-PATH SLEEVES TO CORRIDOR ABOVE CEILING SPACE. EZ-PATH SLEEVE SHALL BE PROPERLY SEALED ON THE EXTERIOR AND INTERIOR TO RETURN WALL BACK TO ORIGINAL RATING. IF WALL IS NOT RATED, EZ-PATH SLEEVE SHALL BE PROPERLY SEALED ON THE EXTERIOR AND INTERIOR TO REDUCE NOISE TRAVELING THROUGH PENETRATIONS. EZ-PATH SLEEVES SHALL BE USED FOR LOW VOLTAGE DATA, VOICE, AND SECURITY CABLE ONLY. CONTRACTOR SHALL GROUND ALL EZ-PATH SLEEVES TO THE PRIMARY GROUND BAR FOR THE ROOM. (BY DIV. 26)
21. OPEN 2 RU SPACE FOR FUTURE USE BY THE OWNER. (BY DIV 27)
22. APPROXIMATE LOCATION OF ENTRANCE POINT FOR BASKET TRAY. BASKET TRAY OPENING SHALL BE PROPERLY SEALED ON THE EXTERIOR AND INTERIOR WITH FIRE PILLOWS TO RETURN WALL BACK TO ORIGINAL RATING. IF WALL IS NOT RATED, FIRE PILLOWS SHALL BE PROPERLY SEALED ON THE EXTERIOR AND INTERIOR TO REDUCE NOISE TRAVELING THROUGH PENETRATIONS. BASKET TRAY SHALL BE USED FOR LOW VOLTAGE DATA, VOICE, AND SECURITY CABLE ONLY. CONTRACTOR SHALL GROUND ALL BASKET TRAY TO THE PRIMARY GROUND BAR FOR THE ROOM. (BY DIV. 26)
23. (2) 4-INCH EMT CONDUIT SLEEVES TO 1ST FLOOR SECURITY ROOM WITH NYLON BUSHING ON EACH END AND SECURED TO THE FLOOR. CONDUIT SLEEVE SHALL BE PROPERLY SEALED ON THE EXTERIOR AND INTERIOR TO RETURN WALL BACK TO ORIGINAL RATING. IF WALL IS NOT RATED, CONDUIT SLEEVE SHALL BE PROPERLY SEALED ON THE EXTERIOR AND INTERIOR TO REDUCE NOISE TRAVELING THROUGH PENETRATIONS. CONDUIT SLEEVES SHALL HAVE GROUNDING COLLARS. CONDUIT SLEEVES SHALL BE USED FOR LOW VOLTAGE VOICE, DATA AND SECURITY CABLE ONLY. CONTRACTOR SHALL USE GROUND COLLARS AND GROUND ALL SLEEVES TO THE PRIMARY GROUND BAR FOR THE ROOM (BY DIV. 26)
24. APPROXIMATE LOCATION OF NEW VERTICAL LADDER RACK RUNNING UP THE WALL TO SUPPORT THE DRESSING OF THE HORIZONTAL CABLES. LADDER RACK SHALL EXTEND THE WIDTH OF THE CONDUITS AND THE ENTIRE DISTANCE UP THE WALL TO SUPPORT THE CABLE BUNDLES. (BY DIV 27)

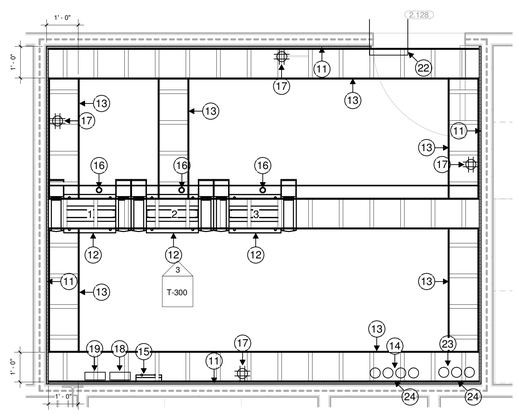

2 DATA/I.T. 2.127 ROOM LAYOUT
1/2" = 1'-0"

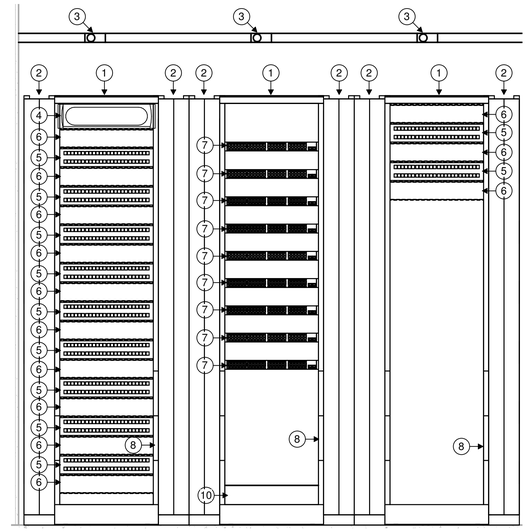

3 DATA/I.T. 2.127 RACK ELEVATION
1" = 1'-0"

muñoz & company
1017 NORTH MAIN SUITE 300
SAN ANTONIO, TEXAS 78212
O. 210.349.1163 F. 210.525.1038
W W W . M U N O Z - C O . C O M

COMBS Consulting Group
10 years
technology & security
SAN ANTONIO
8200 IH-10 West, Ste. 103
San Antonio, Texas 78230
Phone : 210-698-7887
AUSTIN
4425 S. Mopac
Bldg. 4, Ste. 800
Austin, Texas 78735

REGISTERED COMMUNICATIONS DISTRIBUTION DESIGNER
Bicsi
BILL E HENRICH
REG. No. 191959R
EXPIRES 12-31-19
SIGNATURE
11-6-2018

UTRGV
The University of Texas Rio Grande Valley

UNIVERSITY OF TEXAS RIO GRANDE VALLEY
SCHOOL OF MEDICINE
TEAM BASED LEARNING CENTER
PROJECT NO: 903-1159
EDINBURG, TX
100% CONSTRUCTION DOCUMENTS

Issue/Revision

#	DESCRIPTION	DATE

Sheet Title
TECHNOLOGY ROOM LAYOUTS AND RACK ELEVATIONS

BP2

Date
NOVEMBER 08, 2018

Project Number	Drawn By	Checked By
A17021.00	PM	DR

Sheet Number
T-300

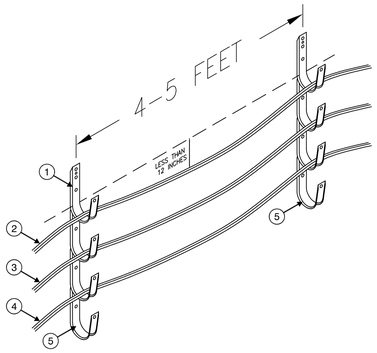

1. J-HOOK ABOVE ACCESSIBLE CEILING (BY DIV 27)
2. DATA CABLE ABOVE ACCESSIBLE CEILING (BY DIV 27)
3. A/V CABLE ABOVE ACCESSIBLE CEILING (BY DIV 27)
4. SECURITY CABLE ABOVE ACCESSIBLE CEILING (BY DIV 28)
5. SPARE J-HOOK (BY DIV 27)

1/T-400 TYPICAL J-HOOK CABLE PATHWAY DETAIL

SCALE: N.T.S.

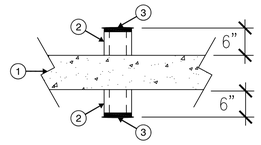

1. SCHEDULED FLOOR OR DECK
2. CONDUIT SLEEVE (BY DIV 26)
3. NYLON BUSHING (BY DIV 26)

2/T-400 TYPICAL CONDUIT SLEEVE GOING THRU FLOOR OR DECK

SCALE: N.T.S.

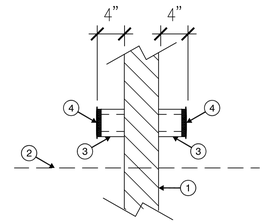

1. SCHEDULED WALL
2. SCHEDULED CEILING
3. CONDUIT SLEEVE (BY DIV 26)
4. NYLON BUSHING (BY DIV 26)

3/T-400 TYPICAL CONDUIT SLEEVE GOING THRU WALL

SCALE: N.T.S.

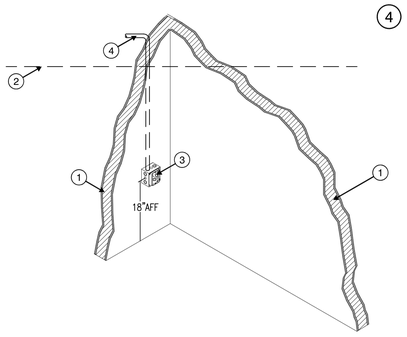

1. SCHEDULED WALL.
2. SCHEDULED CEILING.
3. 4 11/16" X 4 11/16" X 2 1/8" RECESSED DOUBLE GANG BOX WITH SINGLE GANG PLASTER RING (BY DIV 26) (BY DIV 26).
4. 1-INCH EMT CONDUIT FROM DOUBLE GANG BOX WITH 200 LBS PULL STRING AND NYLON BUSHING STUBBED OUT ABOVE ACCESSIBLE CEILING IN THE SAME ROOM WHERE THE DEVICE IS LOCATED. IF THE ROOM WHERE THE DEVICE IS LOCATED DOES NOT HAVE AN ACCESSIBLE CEILING, THE CONDUIT SHALL ROUTE TO THE NEAREST ACCESSIBLE CEILING OFF OF A MAIN CORRIDOR. CONDUIT PATHWAY SHALL TAKE THE SHORTEST ROUTE TO THE APPLICABLE MDF/IDF ROOM TO MINIMIZE THE CABLE LENGTH. (BY DIV 26)

4/T-400 TYPICAL TECHNOLOGY CONDUIT ROUGH-IN

SCALE: N.T.S.

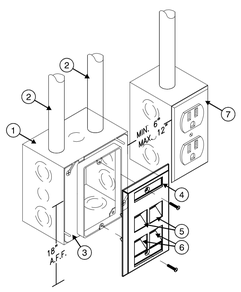

1. 4 11/16" X 4 11/16" X 2 1/8" RECESSED DOUBLE GANG BOX (BY DIV 26).
2. 1-INCH EMT CONDUIT FROM DOUBLE GANG BOX WITH 200 LBS PULL STRING AND NYLON BUSHING STUBBED OUT ABOVE ACCESSIBLE CEILING IN THE SAME ROOM WHERE THE DEVICE IS LOCATED. IF THE ROOM WHERE THE DEVICE IS LOCATED DOES NOT HAVE AN ACCESSIBLE CEILING, THE CONDUIT SHALL ROUTE TO THE NEAREST ACCESSIBLE CEILING OFF OF A MAIN CORRIDOR. CONDUIT PATHWAY SHALL TAKE THE SHORTEST ROUTE TO THE APPLICABLE MDF/IDF ROOM TO MINIMIZE THE CABLE LENGTH. (BY DIV 26)
3. SINGLE GANG PLASTER RING (BY DIV 26)
4. SINGLE GANG WALL PLATE (BY DIV 27)
5. RJ-45 INSERT (BY DIV 27)
6. BLANK INSERT (BY DIV 27)
7. ELECTRICAL RECEPTACLE, GANG BOX AND CONDUIT SHOWN FOR REFERENCE ONLY (REFER TO DIV 26)

5/T-400 TYPICAL DUAL DATA WORKSTATION CONFIGURATION

SCALE: N.T.S.

1. 4 11/16" x 4 11/16" x 2 1/8" RECESSED DOUBLE GANG BOX (BY DIV 26)
2. 1-INCH EMT CONDUIT FROM DOUBLE GANG BOX WITH 200 LBS PULL STRING AND NYLON BUSHING STUBBED OUT ABOVE ACCESSIBLE CEILING IN THE SAME ROOM WHERE THE DEVICE IS LOCATED. IF THE ROOM WHERE THE DEVICE IS LOCATED DOES NOT HAVE AN ACCESSIBLE CEILING, THE CONDUIT SHALL ROUTE TO THE NEAREST ACCESSIBLE CEILING OFF OF A MAIN CORRIDOR. CONDUIT PATHWAY SHALL TAKE THE SHORTEST ROUTE TO THE APPLICABLE MDF/IDF ROOM TO MINIMIZE THE CABLE LENGTH. (BY DIV 26)
3. SINGLE GANG PLASTER RING (BY DIV 26)
4. SINGLE GANG WALL PLATE (BY DIV 27)
5. RJ-45 INSERT (BY DIV 27)
6. BLANK SINGLE GANG WALL PLATE (BY DIV 27)
7. ELECTRICAL RECEPTACLE, GANG BOX AND CONDUIT SHOWN FOR REFERENCE ONLY (REFER TO DIV 26)
8. ELECTRICAL RECEPTACLE, GANG BOX AND CONDUIT SHOWN FOR REFERENCE ONLY (REFER TO DIV 26)

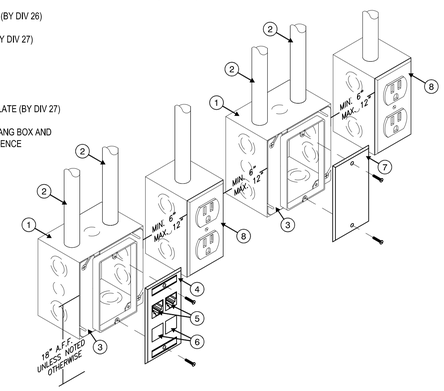

6/T-400 TYPICAL MULTIMEDIA WORKSTATION CONFIGURATION

SCALE: N.T.S.

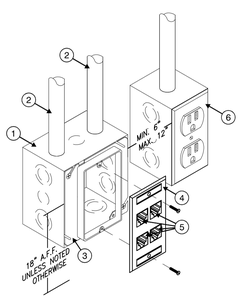

1. 4 11/16" x 4 11/16" x 2 1/8" RECESSED DOUBLE GANG BOX (BY DIV 26)
2. 1-INCH EMT CONDUIT FROM DOUBLE GANG BOX WITH 200 LBS PULL STRING AND NYLON BUSHING STUBBED OUT ABOVE ACCESSIBLE CEILING IN THE SAME ROOM WHERE THE DEVICE IS LOCATED. IF THE ROOM WHERE THE DEVICE IS LOCATED DOES NOT HAVE AN ACCESSIBLE CEILING, THE CONDUIT SHALL ROUTE TO THE NEAREST ACCESSIBLE CEILING OFF OF A MAIN CORRIDOR. CONDUIT PATHWAY SHALL TAKE THE SHORTEST ROUTE TO THE APPLICABLE MDF/IDF ROOM TO MINIMIZE THE CABLE LENGTH. (BY DIV 26)
3. SINGLE GANG PLASTER RING (BY DIV 26)
4. SINGLE GANG WALL PLATE (BY DIV 27)
5. RJ-45 INSERT (BY DIV 27)
6. ELECTRICAL RECEPTACLE, GANG BOX AND CONDUIT SHOWN FOR REFERENCE ONLY (REFER TO DIV 26)

7/T-400 TYPICAL QUAD DATA WORKSTATION CONFIGURATION

SCALE: N.T.S.

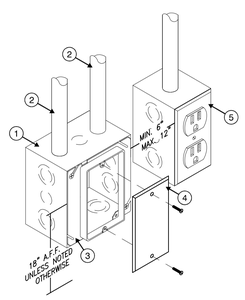

1. 4 11/16" x 4 11/16" x 2 1/8" RECESSED DOUBLE GANG BOX (BY DIV 26)
2. 1-INCH EMT CONDUIT FROM DOUBLE GANG BOX WITH 200 LBS PULL STRING AND NYLON BUSHING STUBBED OUT ABOVE ACCESSIBLE CEILING IN THE SAME ROOM WHERE THE DEVICE IS LOCATED. IF THE ROOM WHERE THE DEVICE IS LOCATED DOES NOT HAVE AN ACCESSIBLE CEILING, THE CONDUIT SHALL ROUTE TO THE NEAREST ACCESSIBLE CEILING OFF OF A MAIN CORRIDOR. CONDUIT PATHWAY SHALL TAKE THE SHORTEST ROUTE TO THE APPLICABLE MDF/IDF ROOM TO MINIMIZE THE CABLE LENGTH. (BY DIV 26)
3. SINGLE GANG PLASTER RING (BY DIV 26)
4. BLANK SINGLE GANG WALL PLATE (BY DIV 27)
5. ELECTRICAL RECEPTACLE, GANG BOX AND CONDUIT SHOWN FOR REFERENCE ONLY (REFER TO DIV 26)

8/T-400 TYPCIAL EMPTY ROUGH-IN CONFIGURATION

SCALE: N.T.S.

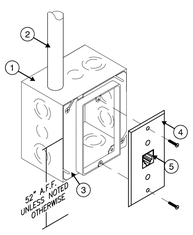

1. 4 11/16" x 4 11/16" x 2 1/8" RECESSED DOUBLE GANG BOX (BY DIV 26)
2. 1-INCH EMT CONDUIT FROM DOUBLE GANG BOX WITH 200 LBS PULL STRING AND NYLON BUSHING STUBBED OUT ABOVE ACCESSIBLE CEILING IN THE SAME ROOM WHERE THE DEVICE IS LOCATED. IF THE ROOM WHERE THE DEVICE IS LOCATED DOES NOT HAVE AN ACCESSIBLE CEILING, THE CONDUIT SHALL ROUTE TO THE NEAREST ACCESSIBLE CEILING OFF OF A MAIN CORRIDOR. CONDUIT PATHWAY SHALL TAKE THE SHORTEST ROUTE TO THE APPLICABLE MDF/IDF ROOM TO MINIMIZE THE CABLE LENGTH. (BY DIV 26)
3. SINGLE GANG PLASTER RING (BY DIV 26)
4. SINGLE GANG WALL PHONE PLATE (BY DIV 27)
5. RJ-45 INSERT (BY DIV 27)

9/T-400 TYPICAL WALL MOUNTED PHONE CONFIGURATION

SCALE: N.T.S.

muñoz & company
1017 NORTH MAIN SUITE 300
SAN ANTONIO, TEXAS 78212
O. 210.349.1163 F. 210.525.1038
W W W . M U N O Z - C O . C O M

COMBS Consulting Group
10 years technology & security
SAN ANTONIO
8200 IH-10 West, Ste. 103
San Antonio, Texas 78230
Phone : 210-698-7887
AUSTIN
4425 S. Mopac
Bldg. 4, Ste. 800
Austin, Texas 78735

REGISTERED COMMUNICATIONS DISTRIBUTION DESIGNER
Bicsi
BILL E HENRICH
REG. No. 191959R
EXPIRES 12-31-19
SIGNATURE
11-6-2018

UTRGV
The University of Texas Rio Grande Valley

UNIVERSITY OF TEXAS RIO GRANDE VALLEY
SCHOOL OF MEDICINE
TEAM BASED LEARNING CENTER
PROJECT NO: 903-1159
EDINBURG, TX
100% CONSTRUCTION DOCUMENTS

Issue/Revision

#	DESCRIPTION	DATE

Sheet Title
TECHNOLOGY TYPICAL DETAILS

BP2

Date
NOVEMBER 08, 2018

Project Number	Drawn By	Checked By
A17021.00	PM	DR

Sheet Number
T-400

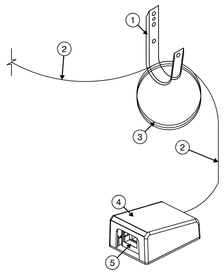

1. J-HOOK ABOVE ACCESSIBLE CEILING (BY DIV 27)
2. DATA CABLE ABOVE ACCESSIBLE CEILING (BY DIV 27)
3. 20 FOOT SERVICE LOOP ABOVE ACCESSIBLE CEILING NEATLY COILED AND SECURED TO J-HOOK (BY DIV 27)
4. SURFACE MOUNT BOX ABOVE ACCESSIBLE CEILING AND SECURED TO BUILDING STRUCTURE (BY DIV 27)
5. RJ-45 INSERT (BY DIV 27)

1/T-401 TYPICAL ABOVE ACCESSIBLE CEILING DATA OUTLET

SCALE: N.T.S.

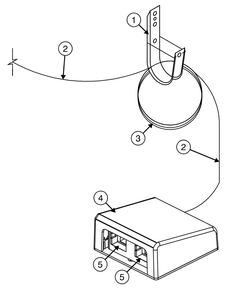

1. J-HOOK ABOVE ACCESSIBLE CEILING (BY DIV 27)
2. DATA CABLE ABOVE ACCESSIBLE CEILING (BY DIV 27)
3. 20 FOOT SERVICE LOOP ABOVE ACCESSIBLE CEILING NEATLY COILED AND SECURED TO J-HOOK (BY DIV 27)
4. SURFACE MOUNT BOX ABOVE ACCESSIBLE CEILING AND SECURED TO BUILDING STRUCTURE (BY DIV 27)
5. RJ-45 INSERT (BY DIV 27)

2/T-401 TYPICAL ABOVE ACCESSIBLE CEILING DUAL DATA OUTLET

SCALE: N.T.S.

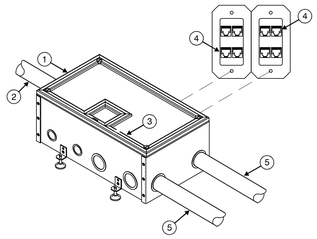

1. FSR FL-500 P-8-B, 8- INCH DEEP FLOOR BOX. CONTRACTOR SHALL VERIFY COLOR OF COVER PLATE PRIOR TO PURCHASES. (BY DIV 26)
2. 1 1/4-INCH EMT CONDUIT WITH INSULATED THROAT FROM FLOOR BOX WITH 200 LBS PULL STRING, RUN IN COURT FLOOR, AND STUBBED OUT TO THE NEAREST ACCESSIBLE LOCATION OUTSIDE OF THE COURT. CONDUIT PATHWAY SHALL TAKE THE SHORTEST ROUTE TO THE APPLICABLE MDF/IDF ROOM TO MINIMIZE THE CABLE LENGTH (BY DIV 26).
3. FLOOR BOX COVER TO MATCH BASKETBALL COURT FLOORING (BY DIV 26).
4. DATA INSERTS IN DECORA FACEPLATE - QUANTITY AS SHOWN ON TECHNOLOGY DRAWINGS (BY DIV 27).
5. (1) 1.5- INCH EMT CONDUIT WITH INSULATED THROAT FROM FLOOR BOX WITH 200 LBS PULL STRING. RUN IN COURT FLOOR AND STUBBED OUT IN THE SAME ROOM WHERE THE DEVICE IS LOCATED. IF THE ROOM WHERE THE DEVICE IS LOCATED DOESNT NOT HAVE AN ACCESSIBLE CEILING, THE CONDUIT SHALL ROUTE TO THE NEAREST ACCESSIBLE CEILING OFF A MAIN CORRIDOR. CONDUIT PATHWAY SHALLTAKE THE SHORTEST ROUTE TO THE APPLICABLE MDF ROOM TO MINIMIZE THE CABLE DISTANCE. (BY DIV 27)

3/T-401 TYPICAL FLOOR BOX CONFIGURATION

SCALE: N.T.S.

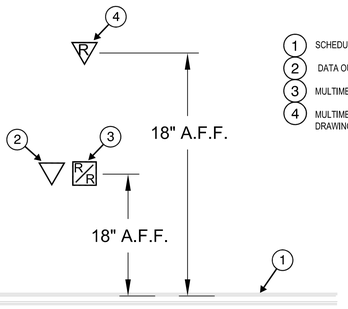

1. SCHEDULED FLOOR. (BY OTHERS)
2. DATA OUTLET AS INDICATED IN THE TECHNOLOGY DRAWINGS.
3. MULTIMEDIA INPUT ROUGH IN AS INDICATED IN THE TECHNOLOGY DRAWINGS.
4. MULTIMEDIA CONTROL PANEL ROUGH IN AS INDICATED IN THE TECHNOLOGY DRAWINGS.

4/T-401 TYPICAL MULTIMEDIA WALL ELEVATION

SCALE: N.T.S.

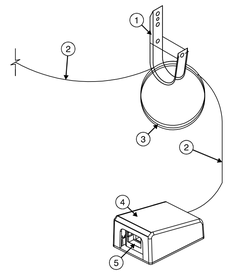

1. J-HOOK ABOVE ACCESSIBLE CEILING (BY DIV 27)
2. DATA CABLE ABOVE ACCESSIBLE CEILING (BY DIV 27)
3. 20 FOOT SERVICE LOOP ABOVE ACCESSIBLE CEILING NEATLY COILED AND SECURED TO J-HOOK (BY DIV 27)
4. SURFACE MOUNT BOX ABOVE ACCESSIBLE CEILING SECURED TO BUILDING STRUCTURE (BY DIV 27)
5. DATA INSERT (BY DIV 27)

5/T-401 TYPICAL CEILING MOUNTED CAMERA FOR AUDIO VISUAL MONITORING

SCALE: N.T.S.

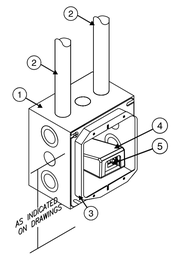

1. 4 11/16-INCH X 4 11/16-INCH X 2 1/8-INCH RECESSED DOUBLE GANG BOX (BY DIV 26).
2. 1-INCH EMT CONDUIT FROM DOUBLE GANG BOX WITH 200 LBS PULL STRING AND NYLON BUSHING STUBBED OUT ABOVE ACCESSIBLE CEILING IN THE SAME ROOM WHERE THE DEVICE IS LOCATED. IF THE ROOM WHERE THE DEVICE IS LOCATED DOES NOT HAVE AN ACCESSIBLE CEILING, THE CONDUIT SHALL ROUTE TO THE NEAREST ACCESSIBLE CEILING OFF OF A MAIN CORRIDOR. CONDUIT PATHWAY SHALL TAKE THE SHORTEST ROUTE TO THE APPLICABLE MDF/IDF ROOM TO MINIMIZE THE CABLE LENGTH (BY DIV 26).
3. DOUBLE GANG PLASTER RING (BY DIV 26).
4. SURFACE MOUNT BOX INSIDE THE 4 11/16-INCH X 4 11/16-INCH X 2 1/8-INCH DOUBLE GANG BOX (BY DIV 27).
5. RJ-45 INSERT (BY DIV 27).

6/T-401 TYPICAL WALL-MOUNTED WIRELESS ACCESS POINT

SCALE: N.T.S.

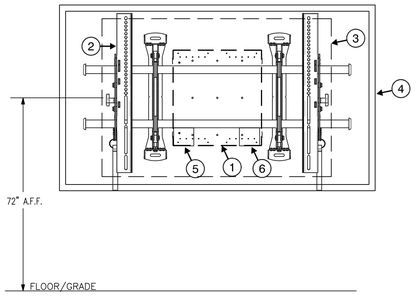

1. RECESSED BACK BOX FOR FLAT PANEL DISPLAY - CHIEF PAC526FCW. REFER TO DRAWINGS AND SPECIFICATIONS FOR ADDITIONAL INFORMATION. COORDINATE FINISH WITH ARCHITECT. (BY DIV 26)
2. OWNER PROVIDED / OWNER INSTALLED FLAT PANEL DISPLAY MOUNTING BRACKET- MANUFACTURE/MODEL NUMBER AS SPECIFIED BY OWNER.
3. IN WALL BLOCKING FOR FLAT PANEL MOUNTING. BLOCKING TO BE PRESENT ON ALL SIDES OF RECESSED BACK BOX. PROVIDE 10-INCHES OF BLOCKING ABOVE AND BELOW RECESSED BACK BOX AND 16-INCHES OF BLOCKING TO THE LEFT AND RIGHT OF BACK BOX. (BY DIV 26)
4. OWNER PROVIDED / OWNER INSTALLED FLAT PANEL DISPLAY. MANUFACTURE/MODEL NUMBER AS SPECIFIED BY OWNER.
5. DUPLEX 120 POWER RECEPTICAL. (BY DIV 26)
6. SINGLE GANG DATA OUTLET ROUGH IN. (BY DIV 26)

7/T-401 TYPICAL WALL-MOUNTED FLAT PANEL DISPLAY

SCALE: N.T.S.

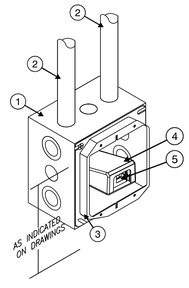

1. 4 11/16" X 4 11/16" X 2 1/8" RECESSED DOUBLE GANG BOX (BY DIV 26).
2. 1-INCH EMT CONDUIT FROM DOUBLE GANG BOX WITH 200 LBS PULL STRING AND NYLON BUSHING STUBBED OUT ABOVE ACCESSIBLE CEILING IN THE SAME ROOM WHERE THE DEVICE IS LOCATED. IF THE ROOM WHERE THE DEVICE IS LOCATED DOES NOT HAVE AN ACCESSIBLE CEILING, THE CONDUIT SHALL ROUTE TO THE NEAREST ACCESSIBLE CEILING OFF OF A MAIN CORRIDOR. CONDUIT PATHWAY SHALL TAKE THE SHORTEST ROUTE TO THE APPLICABLE MDF/IDF ROOM TO MINIMIZE THE CABLE LENGTH (BY DIV 26).
3. DOUBLE GANG PLASTER RING (BY DIV 26).
4. SURFACE MOUNT BOX INSIDE THE 4 11/16-IN X 4 11/16-IN X 2 1/8-IN DOUBLE GANG BOX (BY DIV 27).
5. RJ-45 INSERT (BY DIV 27).

8/T-401 TYPICAL CONDUIT ROUGH-IN FOR SURVEILLANCE CAMERA/ACCESS POINT WITHOUT ACCESSIBLE CEILING

SCALE: N.T.S.

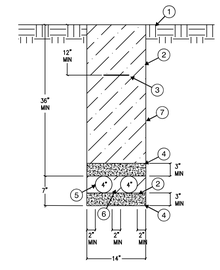

1. FINISHED GRADE (BY DIV 26).
2. SELECT COMPACTED BACKFILL (BY DIV 26).
3. DETECTABLE WARNING TAPE (BY DIV 26).
4. COMPACTED SAND (BY DIV 26).
5. COMMUNICATIONS CONDUIT (BY DIV 26).
6. DUCT SPACERS (TYPICAL BETWEEN ALL CONDUITS) (BY DIV 26).
7. CONCRETE ENCASEMENT

9/T-401 TYPICAL COMMUNICATIONS DUCT BANK DETAIL - (2) 4-INCH CONDUITS

SCALE: N.T.S.

muñoz & company
1017 NORTH MAIN SUITE 300
SAN ANTONIO, TEXAS 78212
O. 210.349.1163 F. 210.525.1038
W W W . M U N O Z - C O . C O M

COMBS Consulting Group
10 years
technology & security
SAN ANTONIO
8200 IH-10 West, Ste. 103
San Antonio, Texas 78230
Phone : 210-698-7887
AUSTIN
4425 S. Mopac
Bldg. 4, Ste. 800
Austin, Texas 78735

REGISTERED COMMUNICATIONS DISTRIBUTION DESIGNER
Bicsi
BILL E HENRICH
REG. No. 191959R
EXPIRES 12-31-19
SIGNATURE
11-6-2018

UTRGV
The University of Texas Rio Grande Valley

UNIVERSITY OF TEXAS RIO GRANDE VALLEY
SCHOOL OF MEDICINE
TEAM BASED LEARNING CENTER
PROJECT NO: 903-1159
EDINBURG, TX
100% CONSTRUCTION DOCUMENTS

Issue/Revision

#	DESCRIPTION	DATE

Sheet Title
TECHNOLOGY TYPICAL DETAILS

BP2

Date
NOVEMBER 08, 2018

Project Number	Drawn By	Checked By
A17021.00	PM	DR

Sheet Number
T-401

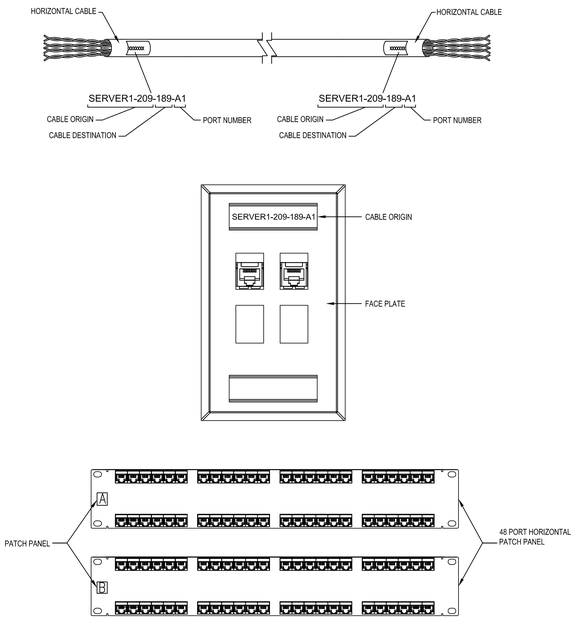

1 T-500 TYPICAL HORIZONTAL DATA CABLE LABELING SCHEME

SCALE: N.T.S.

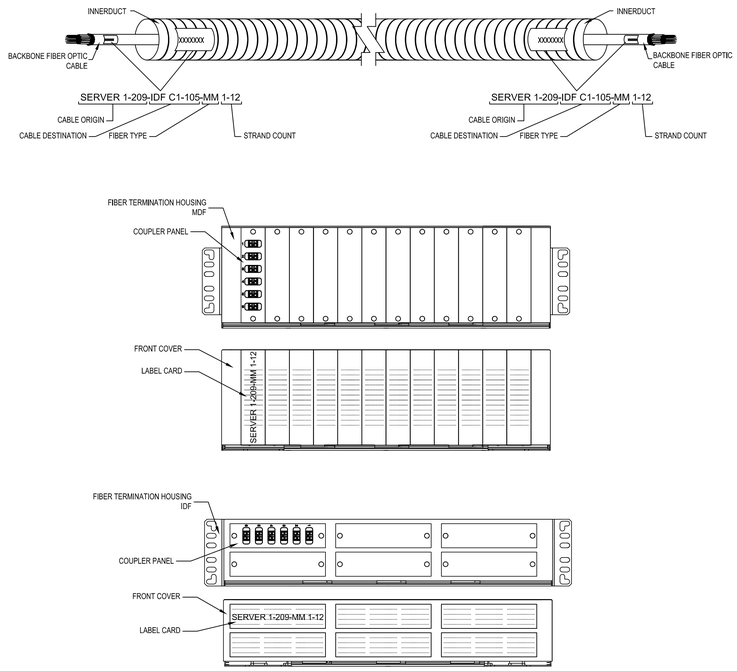

2 T-500 TYPICAL FIBER BACKBONE LABELING SCHEME

SCALE: N.T.S.

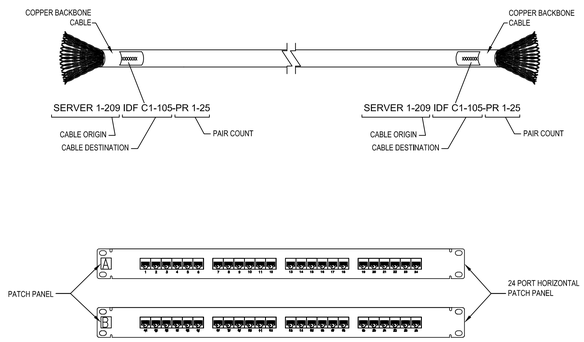

3 T-500 TYPICAL COPPER BACKBONE LABELING SCHEME

SCALE: N.T.S.

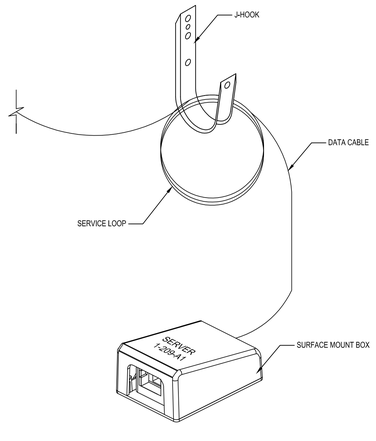

4 T-500 ABOVE ASSESSIBLE CEILING LABELING SCHEME

SCALE: N.T.S.

1. TELECOMMUNICATIONS MAIN GROUNDING BUS BAR (TMGB) (BY DIV 27)
2. TELECOMMUNICATIONS GROUNDING BUS BAR (TGB) (BY DIV 27)
3. TELECOMMUNICATIONS BONDING CONDUCTOR (TBC) (BY DIV 27)
4. CONNECT TO GROUNDED BUILDING STEEL WHEN EXPOSED IN ROOM. (BY DIV 27)
5. TELECOMMUNICATIONS BONDING BACKBONE (TBB) (BY DIV 27)
6. TELECOMMUNICATIONS BONDING CONDUCTOR (TBC) (BY DIV 26)

TBB/GE linear length m (ft)	TBB/GE size (AWG)
less than 4 (13)	6
4 – 6 (14 – 20)	4
6 – 8 (21 – 26)	3
8 – 10 (27 – 33)	2
10 – 13 (34 – 41)	1
13 – 16 (42 – 52)	1/0
16 – 20 (53 – 66)	2/0
20 – 26 (67 – 84)	3/0
26 – 32 (85 – 105)	4/0
32 – 38 (106 – 125)	250 kcmil
38 – 46 (126 – 150)	300 kcmil
46 – 53 (151 – 175)	350 kcmil
53 – 76 (176 – 250)	500 kcmil
76 – 91 (251 – 300)	600 kcmil
Greater than 91 (301)	750 kcmil

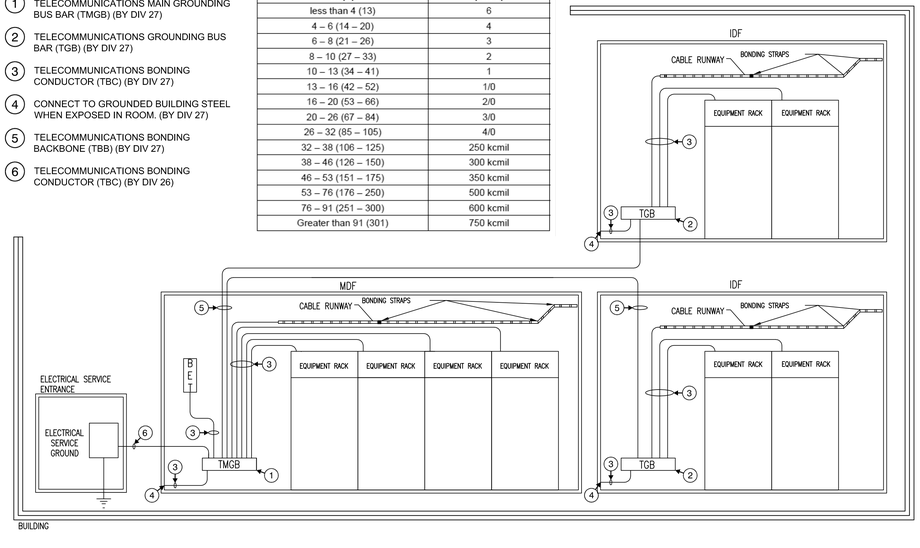

5 T-500 TYPICAL GROUNDING DIAGRAM

SCALE: N.T.S.

KEYED NOTES:

1. 4-11/16" X 4-11/16" X 2-1/8" RECESSED DOUBLE GANG BOX (BY DIV 26).
2. 1-INCH EMT CONDUIT FROM BACK BOX WITH 200 LBS PULL STRING AND NYLON BUSHING STUBBED OUT ABOVE ACCESSIBLE CEILING IN THE SAME ROOM WHERE THE DEVICE IS LOCATED (BY DIV 26).
3. SINGLE-GANG PLASTER RING - DEVICE OPENING MUST HAVE RIGHT-ANGLE CORNERS TO AVOID PHYSICAL CONFLICTS WITH DEVICE(S) (BY DIV 26).
4. KEYPAD CONTROL PANEL - MANUFACTURER/MODEL NUMBER AS SPECIFIED. REFER TO DRAWINGS, SCHEDULES AND SPECIFICATIONS FOR ADDITIONAL INFORMATION (BY DIV 27).

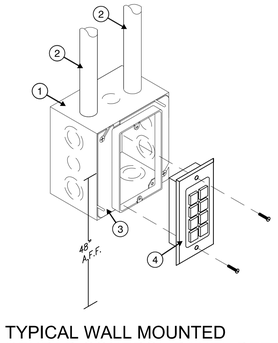

6 T-500 TYPICAL WALL MOUNTED KEYPAD CONTROL PANEL DETAIL

SCALE: N.T.S.

muñoz & company
1017 NORTH MAIN SUITE 300
SAN ANTONIO, TEXAS 78212
O. 210.349.1163 F. 210.525.1038
WWW.MUNOZ-CO.COM

COMBS Consulting Group
10 years technology & security
SAN ANTONIO
8200 IH-10 West, Ste. 103
San Antonio, Texas 78230
Phone : 210-698-7887
AUSTIN
4425 S. Mopac
Bldg. 4, Ste. 800
Austin, Texas 78735

REGISTERED COMMUNICATIONS DISTRIBUTION DESIGNER
Bicsi
BILL E HENRICH
REG. No. 191958R
EXPIRES 12-31-19
SIGNATURE
11-6-2018

UTRGV
The University of Texas Rio Grande Valley

UNIVERSITY OF TEXAS RIO GRANDE VALLEY
SCHOOL OF MEDICINE
TEAM BASED LEARNING CENTER
PROJECT NO: 903-1159
EDINBURG, TX
100% CONSTRUCTION DOCUMENTS

Issue/Revision

#	DESCRIPTION	DATE

Sheet Title
TECHNOLOGY TYPICAL DETAILS & LABELING SCHEME

BP2

Date
NOVEMBER 08, 2018

Project Number	Drawn By	Checked By
A17021.00	PM	DR

Sheet Number
T-500

SECURITY SYMBOLS & LEGEND

ACCESS CONTROL SYMBOLS

ACMW	ACCESS CONTROL MONITORING CLIENT WORKSTATION.
AD	INTERFACE TO AUTOMATIC DOOR CONTROL AND MONITORING.
BI	INTERFACE TO RETRACTABLE VEHICLE BOLLARD.
BR	PROVIDE BIOMETRIC READER MOUNTED 42" A.F.F.
CH	PROVIDE DOOR BELL ANNUNCIATOR MOUNTED 96" A.F.F.
CR	PROVIDE CARD READER MOUNTED 42" A.F.F.
CR1	PROVIDE CARD READER MOUNTED TO MULLION 42" A.F.F.
CR2	FURNISH ELEVATOR CARD READER MOUNTED IN ELEVATOR.
CR3	PROVIDE CARD READER/INTERCOM UNIT MOUNTED 42" A.F.F.
CR4	PROVIDE CARD READER/INTERCOM PEDESTRIAN PEDESTAL.
D	PROVIDE DURESS BUTTON MOUNTED IN KNEE SPACE OF DESK, TABLE OR COUNTER PROVIDE ARMORED CABLE FROM DURESS BUTTON TO JUNCTION BOX.
D	PROVIDE WALL MOUNTED DURESS BUTTON 48" A.F.F.
DB	PROVIDE DOOR BELL MOUNTED 48" A.F.F..
DC	PROVIDE CONCEALED DOOR POSITION SWITCH FLUSH MOUNTED IN HEAD OF DOOR FRAME 6" FROM STRIKE SIDE OF FRAME.
DC1	PROVIDE OVERHEAD DOOR POSITION SWITCH. PROVIDE ARMORED CABLE FROM SWITCH TO JUNCTION BOX.
DMA	PROVIDE DOOR MANAGEMENT UNIT MOUNTED 48" A.F.F.
DR	PROVIDE SINGLE DOOR RELEASE PUSHBUTTON MOUNTED IN KNEE SPACE OF DESK, TABLE OR COUNTER PROVIDE ARMORED CABLE FROM PUSHBUTTON TO JUNCTION BOX.
DR1	PROVIDE MULTIPLE DOOR RELEASE UNIT, AS INDICATED IN DETAILS, MOUNTED IN KNEE SPACE OF DESK, TABLE OR COUNTER. PROVIDE ARMORED CABLE FROM PUSHBUTTON TO JUNCTION BOX.
EI	INTERFACE TO EXIT DEVICE WITH ELECTRIC LATCH RETRACTION AND POWER TRANSFER.
EL	INTERFACE TO ELEVATOR CONTROL/MONITORING.
ES	INTERFACE TO 24VDC FAIL SECURE ELECTRIC STRIKE.
FA	INTERFACE TO FIRE ALARM SYSTEM.
GC	INTERFACE TO PARKING GATE CONTROL/MONITORING.
IC	PROVIDE INTERCOM SUBSTATION MOUNTED 48" A.F.F.
IM	PROVIDE INTERCOM MASTER STATION AS INDICATED BLOCK DIAGRAM AND/OR DETAILS.
KS	PROVIDE KEYSWITCH MOUNTED 48" A.F.F.
L1	INTERFACE TO 24VDC ELECTROMECHANICAL MORTISE LOCKSET AND POWER TRANSFER HINGE.
L2	INTERFACE TO 24VDC ELECTROMECHANICAL MORTISE LOCKSET WITH INTEGRAL DOOR POSITION SWITCH.
LD	PROVIDE LOCKDOWN BUTTON MOUNTED IN KNEE SPACE OF DESK, TABLE OR COUNTER. PROVIDE ARMORED CABLE FROM LOCKDOWN BUTTON TO JUNCTION BOX.
LD	PROVIDE LOCKDOWN BUTTON MOUNTED 48" A.F.F..
M1	INTERFACE TO 24VDC ELECTROMAGNETIC LOCK.
M2	INTERFACE TO 24VDC ELECTROMAGNETIC LOCK WITH INTEGRAL DOOR POSITION SWITCH.
MH	INTERFACE TO 24VDC MAGNETIC DOOR HOLD-OPEN.
OD	INTERFACE TO OVERHEAD DOOR CONTROL/MONITORING.
RD	INTERFACE TO MOTORIZED REVOLVING DOOR CONTROL/MONITORING.

ACCESS CONTROL SYMBOLS

REX	REQUEST-TO-EXIT IS INTEGRAL WITH ELECTRIFIED LOCKING HARDWARE.
RX	PROVIDE REQUEST-TO-EXIT MOTION SENSOR MOUNTED IN CEILING.
RX	PROVIDE REQUEST-TO-EXIT MOTION SENSOR MOUNTED TO DOOR HEADER.
SD	INTERFACE TO SLIDING DOOR CONTROL/MONITORING.
SR	SECURITY SYSTEM RISER, DATA GATHERING PANEL AND LOW VOLTAGE POWER SUPPLY DISTRIBUTION LOCATION.
VI	PROVIDE VIDEO INTERCOM SUBSTATION MOUNTED 54" A.F.F.
VM	PROVIDE DESKTOP VIDEO INTERCOM MASTER STATION.
WD	PROVIDE WIRELESS DURESS BUTTON MOUNTED IN KNEE SPACE OF DESK, TABLE, OR COUNTER.
WR	PROVIDE WIRELESS DURESS BUTTON RECEIVER ABOVE SUSPENDED CEILING.
	PROVIDE PRE-WIRE AND BLANK COVER PLATE FOR FUTURE DEVICE.

INTRUSION DETECTION SYMBOLS

AL	PROVIDE ALARM ANNUNCIATOR LIGHT MOUNTED 96" A.F.F.
AP	PROVIDE ANNUNCIATOR PANEL AS INDICATED IN BLOCK DIAGRAMS AND/OR DETAILS.
AV	PROVIDE AUDIO VISUAL ANNUNCIATOR MOUNTED 96" A.F.F.
FC	FUTURE CABLE AS SPECIFIED.
GB	PROVIDE GLASS BREAK SENSOR MOUNTED TO CEILING.
GB	PROVIDE GLASS BREAK SENSOR WALL MOUNTED 96" A.F.F.
KP	PROVIDE PERSONAL IDENTIFICATION NUMBER KEYPAD MOUNTED 48" A.F.F.
M	PROVIDE SOUND DETECTION MICROPHONE MOUNTED TO CEILING.
MD	PROVIDE 360° MOTION SENSOR MOUNTED TO CEILING.
MD	PROVIDE MOTION SENSOR MOUNTED 96" A.F.F.
MD LR	PROVIDE LONG RANGE MOTION SENSOR MOUNTED 96" A.F.F.
ST	PROVIDE STROBE LIGHT SURFACE MOUNTED TO CEILING.
ST	PROVIDE STROBE LIGHT MOUNTED 96" A.F.F.
V	PROVIDE VIBRATION DETECTOR MOUNTED 96" A.F.F.

ELECTRONIC SURVEILLANCE SYMBOLS

	WALL-MOUNTED FIXED SURVEILLANCE CAMERA, CAMERA MODEL AND MOUNTING HEIGHT AS SPECIFIED.
	CEILING-MOUNTED FIXED SURVEILLANCE CAMERA, CAMERA MODEL AND MOUNTING HEIGHT AS SPECIFIED.
	WALL-MOUNTED 180° SURVEILLANCE CAMERA, CAMERA MODEL AND MOUNTING HEIGHT AS SPECIFIED.
	CEILING-MOUNTED 180° SURVEILLANCE CAMERA, CAMERA MODEL AND MOUNTING HEIGHT AS SPECIFIED.
	WALL-MOUNTED 360° SURVEILLANCE CAMERA, CAMERA MODEL AND MOUNTING HEIGHT AS SPECIFIED.
	CEILING-MOUNTED 360° SURVEILLANCE CAMERA, CAMERA MODEL AND MOUNTING HEIGHT AS SPECIFIED.
PAN TILT ZOOM	WALL-MOUNTED PAN, TILT & ZOOM SURVEILLANCE CAMERA, CAMERA MODEL AND MOUNTING HEIGHT AS SPECIFIED.
PAN TILT ZOOM CLG	CEILING-MOUNTED PAN, TILT & ZOOM SURVEILLANCE CAMERA, CAMERA MODEL AND MOUNTING HEIGHT AS SPECIFIED.
VMW	VIDEO MONITORING CLIENT WORKSTATION.

MISCELLANEOUS SECURITY SYMBOLS

B	ALERTUS BEACON MOUNTED AT 60" A.F.F. UNLESS OTHERWISE NOTED
EAS	PROVIDE MEDICAL ALERT DEVICE MOUNTED 42" A.F.F.
EP	PROVIDE EMERGENCY PHONE.
GT	PROVIDE GUARD TOUR STATION MOUNTED 48" A.F.F.
LS	PROVIDE FLOOR MOUNTED LIQUID SENSOR. PROVIDE ARMORED CABLE FROM SENSOR TO JUNCTION BOX.
S	PROVIDE INTERCOM SPEAKER FLUSH MOUNTED IN CEILING.
	ALERTUS LED MARQUEE (SINGLE SIDED)
	ALERTUS LED MARQUEE (DOUBLE SIDED)

GENERAL SYMBOLS

# SHEET DRAWING TITLE SCALE: SCALE	DRAWING TITLE CALLOUT, # = DETAIL NUMBER.
# SHEET	DETAIL CALLOUT, # = DETAIL NUMBER.
# SHEET	SECTION CALLOUT, # = DETAIL NUMBER.
SHEET #	ELEVATION CALLOUT, # = DETAIL NUMBER.
#	KEYED NOTE.
#	REVISION TRIANGLE, # = REVISION NUMBER (PER SHEET).
TR (IDF XXX)	INDICATES TELECOMMUNICATIONS REGION

ABBREVIATIONS

A.F.F.	ABOVE FINISHED FLOOR
A.F.G.	ABOVE FINISHED GRADE
AER	AERIAL
B	BURIED
CAT.3/5	CATEGORY 3/5
CATV	COMMUNITY ANTENNA TELEVISION
CCTV	CLOSED CIRCUIT TELEVISION
CLT	CLOSET
CO	CENTRAL OFFICE
DEMARC	DEMARCATION POINT
DPDT	DOUBLE PULL DOUBLE THROW
EMT	ELECTRIC METALLIC TUBE
F.O.C.	FIBER OPTIC CABLE
GIP	GALVANIZED IRON PIPE
HE	PA/INTERCOM HEAD-END
IRC	INTERMEDIATE RIGID CONDUIT
ISP	INSIDE CABLE PLANT
IDF	INTERMEDIATE DISTRIBUTION FRAME
MDF	MAIN DISTRIBUTION FRAME
MH	MANHOLE
MM	MULTIMODE
OSP	OUTSIDE CABLE PLANT
PB	PULLBOX
PR	PAIR
PBX	PRIVATE BRANCH EXCHANGE
PVC	POLYVINYL CHLORIDE
SM	SINGLE MODE
SP	SERVICE PROVIDER
STP	SHIELDED TWISTED PAIR
TB	TERMINAL BLOCK
UTP	UNSHIELDED TWISTED PAIR

NOTES

1. CONTRACTOR SHALL REVIEW DRAWINGS AND SPECIFICATIONS THAT MAKE UP THE CONTRACT DOCUMENTS AND COMPLETE ALL WORK INCLUDED THEREIN.
2. SCALE OF SECURITY DRAWINGS IS PROVIDED FOR REFERENCE ONLY. CONTRACTOR SHALL BE RESPONSIBLE FOR PROPER CABLE LENGTHS, SIZE OF PATHWAYS, DIMENSIONS, ETC.
3. SECURITY DRAWINGS SHALL BE USED TO COMPLEMENT THE WRITTEN SPECIFICATIONS.
4. ANY DISCREPANCY OR CONFLICT WITHIN OR BETWEEN THE DRAWINGS AND SPECIFICATIONS SHALL BE BROUGHT TO THE ATTENTION OF THE ARCHITECT/ENGINEER. DISCREPANCIES OR CONFLICTS NOT BROUGHT TO THE ATTENTION OF THE ARCHITECT/ENGINEER AND SUBSEQUENTLY CLARIFIED DURING THE BIDDING OF THE PROJECT WILL BE DEEMED TO HAVE BEEN BID OR PROPOSED IN THE MORE COSTLY OR DIFFICULT MANNER, AND THE BETTER QUALITY OR GREATER QUANTITY OF WORK SHALL BE PROVIDED BY THE CONTRACTOR IN ACCORDANCE WITH THE ARCHITECT'S/ENGINEER'S INTERPRETATION.

INDEX OF DRAWINGS

TS-000	SECURITY SYMBOLS & LEGEND
TS-101	SECURITY SITE PLAN - BASE BID
TS-201	SECURITY LEVEL ONE - BASE BID FLOOR PLAN
TS-202	SECURITY LEVEL TWO - BASE BID FLOOR PLAN
TS-203	SECURITY ROOF LEVEL - BASE BID FLOOR PLAN
TS-400	SECURITY TYPICAL DETAILS
TS-401	SECURITY TYPICAL DETAILS AND SCHEDULES

muñoz & company
1017 NORTH MAIN SUITE 300
SAN ANTONIO, TEXAS 78212
O. 210.349.1163 F. 210.525.1038
WWW.MUNOZ-CO.COM

COMBS Consulting Group
10 years
technology & security
SAN ANTONIO
8200 IH-10 West, Ste. 103
San Antonio, Texas 78230
Phone : 210-698-7887
AUSTIN
4425 S. Mopac
Bldg. 4, Ste. 800
Austin, Texas 78735

REGISTERED COMMUNICATIONS DISTRIBUTION DESIGNER
Bicsi
BILL E HENRICH
REG. No. 191958R
EXPIRES 12-31-19
SIGNATURE
11-6-2018

UTRGV
The University of Texas Rio Grande Valley

UNIVERSITY OF TEXAS RIO GRANDE VALLEY
SCHOOL OF MEDICINE
TEAM BASED LEARNING CENTER
PROJECT NO: 903-1159
EDINBURG, TX
100% CONSTRUCTION DOCUMENTS

Issue/Revision

#	DESCRIPTION	DATE

Sheet Title
SECURITY SYMBOLS AND LEGEND

BP2

Date
NOVEMBER 08, 2018

Project Number	Drawn By	Checked By
A17021.00	PM	DR

Sheet Number
TS-000

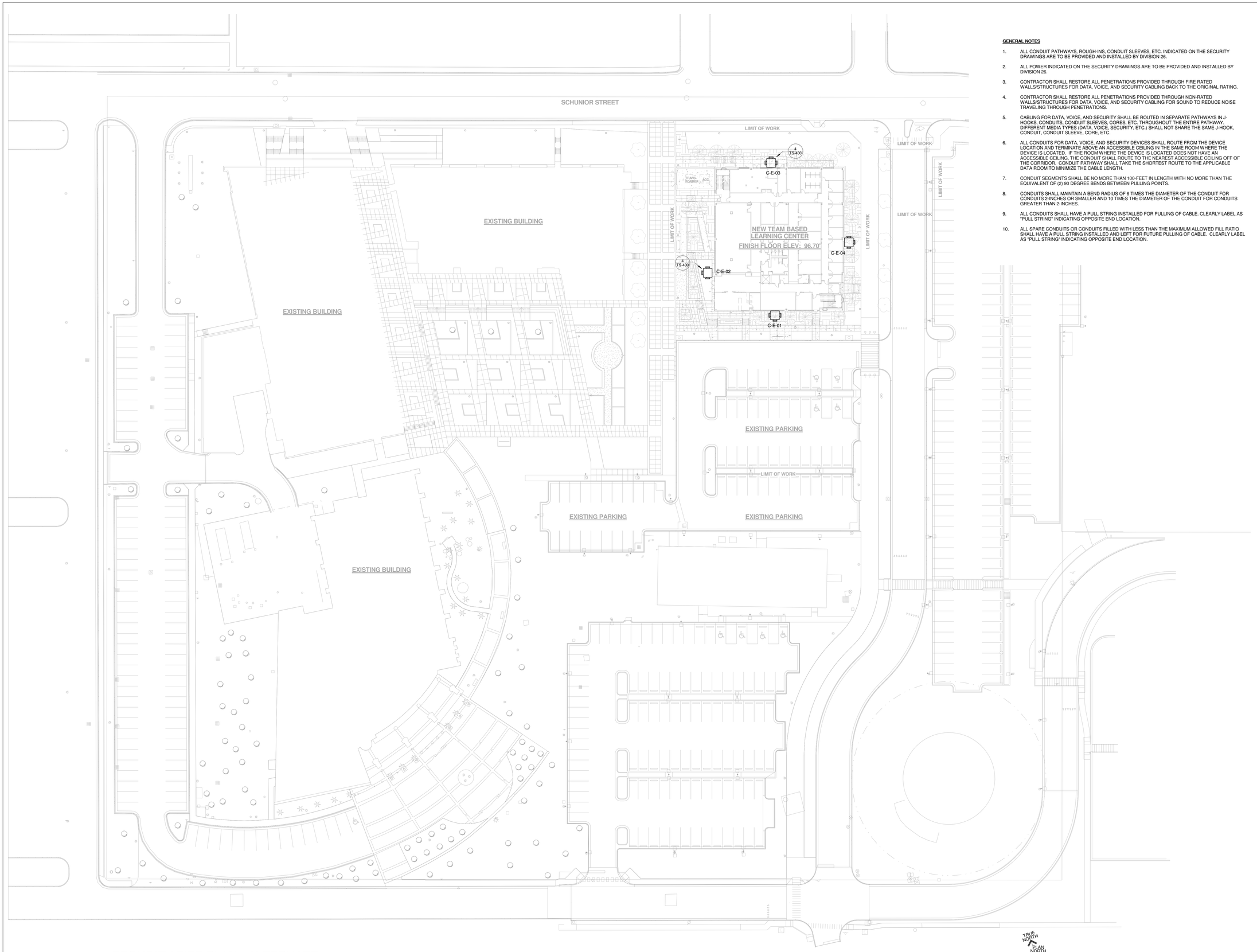

1 SECURITY SITE PLAN - ALTERNATE
1" = 30'-0"

GENERAL NOTES

1. ALL CONDUIT PATHWAYS, ROUGH-INS, CONDUIT SLEEVES, ETC. INDICATED ON THE SECURITY DRAWINGS ARE TO BE PROVIDED AND INSTALLED BY DIVISION 26.
2. ALL POWER INDICATED ON THE SECURITY DRAWINGS ARE TO BE PROVIDED AND INSTALLED BY DIVISION 26.
3. CONTRACTOR SHALL RESTORE ALL PENETRATIONS PROVIDED THROUGH FIRE RATED WALLS/STRUCTURES FOR DATA, VOICE, AND SECURITY CABLING BACK TO THE ORIGINAL RATING.
4. CONTRACTOR SHALL RESTORE ALL PENETRATIONS PROVIDED THROUGH NON-RATED WALLS/STRUCTURES FOR DATA, VOICE, AND SECURITY CABLING FOR SOUND TO REDUCE NOISE TRAVELING THROUGH PENETRATIONS.
5. CABLING FOR DATA, VOICE, AND SECURITY SHALL BE ROUTED IN SEPARATE PATHWAYS IN J-HOOKS, CONDUITS, CONDUIT SLEEVES, CORES, ETC. THROUGHOUT THE ENTIRE PATHWAY. DIFFERENT MEDIA TYPES (DATA, VOICE, SECURITY, ETC.) SHALL NOT SHARE THE SAME J-HOOK, CONDUIT, CONDUIT SLEEVE, CORE, ETC.
6. ALL CONDUITS FOR DATA, VOICE, AND SECURITY DEVICES SHALL ROUTE FROM THE DEVICE LOCATION AND TERMINATE ABOVE AN ACCESSIBLE CEILING IN THE SAME ROOM WHERE THE DEVICE IS LOCATED. IF THE ROOM WHERE THE DEVICE IS LOCATED DOES NOT HAVE AN ACCESSIBLE CEILING, THE CONDUIT SHALL ROUTE TO THE NEAREST ACCESSIBLE CEILING OFF OF THE CORRIDOR. CONDUIT PATHWAY SHALL TAKE THE SHORTEST ROUTE TO THE APPLICABLE DATA ROOM TO MINIMIZE THE CABLE LENGTH.
7. CONDUIT SEGMENTS SHALL BE NO MORE THAN 100-FEET IN LENGTH WITH NO MORE THAN THE EQUIVALENT OF (2) 90 DEGREE BENDS BETWEEN PULLING POINTS.
8. CONDUITS SHALL MAINTAIN A BEND RADIUS OF 6 TIMES THE DIAMETER OF THE CONDUIT FOR CONDUITS 2-INCHES OR SMALLER AND 10 TIMES THE DIAMETER OF THE CONDUIT FOR CONDUITS GREATER THAN 2-INCHES.
9. ALL CONDUITS SHALL HAVE A PULL STRING INSTALLED FOR PULLING OF CABLE. CLEARLY LABEL AS "PULL STRING" INDICATING OPPOSITE END LOCATION.
10. ALL SPARE CONDUITS OR CONDUITS FILLED WITH LESS THAN THE MAXIMUM ALLOWED FILL RATIO SHALL HAVE A PULL STRING INSTALLED AND LEFT FOR FUTURE PULLING OF CABLE. CLEARLY LABEL AS "PULL STRING" INDICATING OPPOSITE END LOCATION.

muñoz & company
1017 NORTH MAIN SUITE 300
SAN ANTONIO, TEXAS 78212
O. 210.349.1163 F. 210.525.1038
W W W . M U N O Z - C O . C O M

COMBS Consulting Group
10 years
technology & security
SAN ANTONIO
8200 IH-10 West, Ste. 103
San Antonio, Texas 78230
Phone : 210-698-7887
AUSTIN
4425 S. Mopac
Bldg. 4, Ste. 800
Austin, Texas 78735

REGISTERED COMMUNICATIONS DISTRIBUTION DESIGNER
Bicsi
BILL E HENRICH
REG. No. 191959R
EXPIRES 12-31-19
SIGNATURE
11-6-2018

UTRGV
The University of Texas Rio Grande Valley

UNIVERSITY OF TEXAS RIO GRANDE VALLEY
SCHOOL OF MEDICINE
TEAM BASED LEARNING CENTER
PROJECT NO: 903-1159
EDINBURG, TX
100% CONSTRUCTION DOCUMENTS

Issue/Revision

#	DESCRIPTION	DATE

Sheet Title
SECURITY SITE PLAN

BP2

Date
NOVEMBER 08, 2018

Project Number	Drawn By	Checked By
A17021.00	PM	DR

Sheet Number
TS-101

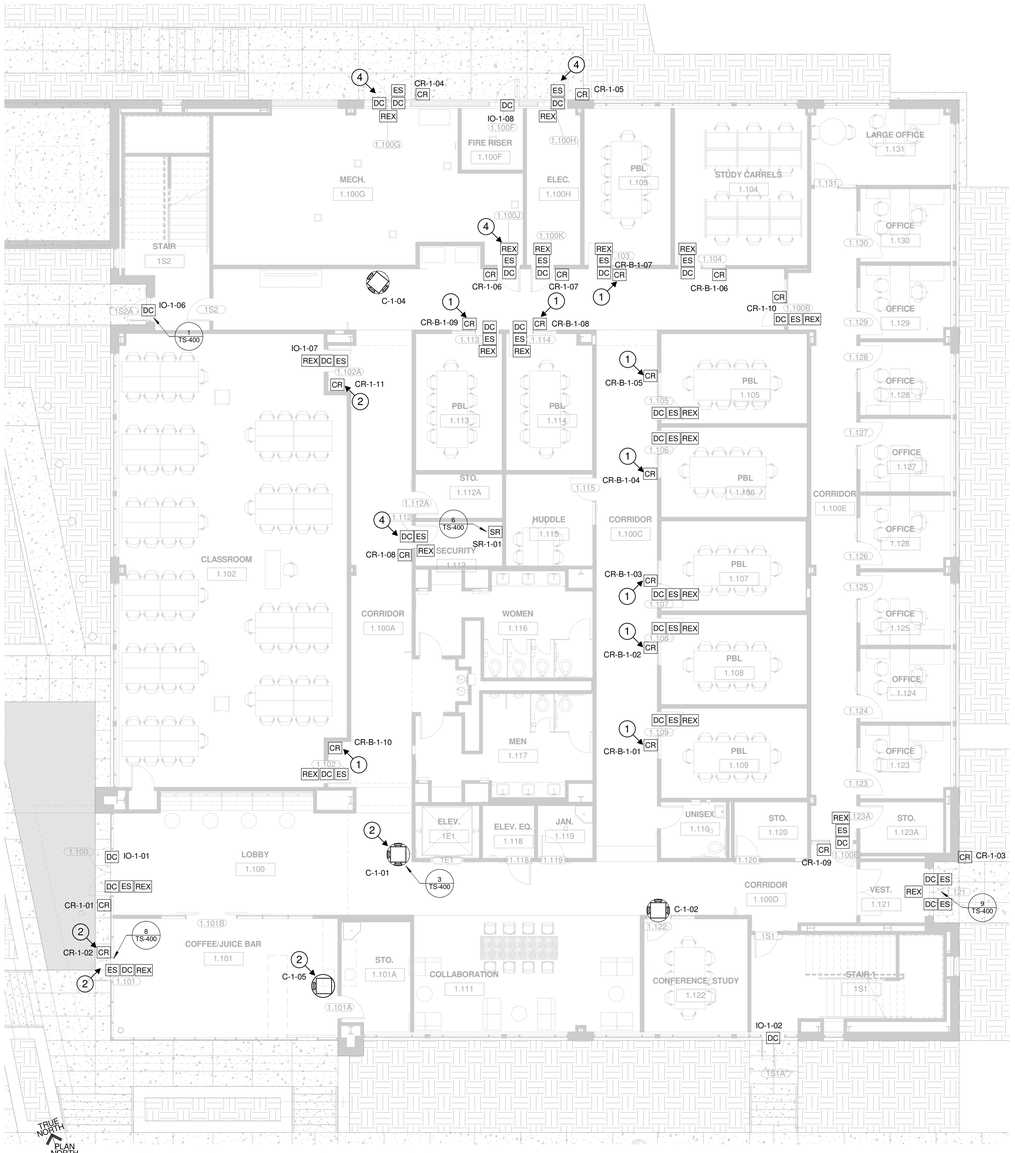

1 SECURITY LEVEL ONE - FLOOR PLAN
1/8" = 1'-0"

GENERAL NOTES

1. ALL CONDUIT PATHWAYS, ROUGH-INS, CONDUIT SLEEVES, ETC. INDICATED ON THE SECURITY DRAWINGS ARE TO BE PROVIDED AND INSTALLED BY DIVISION 26.
2. ALL POWER INDICATED ON THE SECURITY DRAWINGS ARE TO BE PROVIDED AND INSTALLED BY DIVISION 26.
3. CONTRACTOR SHALL RESTORE ALL PENETRATIONS PROVIDED THROUGH FIRE RATED WALLS/STRUCTURES FOR DATA, VOICE, AND SECURITY CABLING BACK TO THE ORIGINAL RATING.
4. CONTRACTOR SHALL RESTORE ALL PENETRATIONS PROVIDED THROUGH NON-RATED WALLS/STRUCTURES FOR DATA, VOICE, AND SECURITY CABLING FOR SOUND TO REDUCE NOISE TRAVELING THROUGH PENETRATIONS.
5. CABLING FOR DATA, VOICE, AND SECURITY SHALL BE ROUTED IN SEPARATE PATHWAYS IN J-HOOKS, CONDUITS, CONDUIT SLEEVES, CORES, ETC. THROUGHOUT THE ENTIRE PATHWAY. DIFFERENT MEDIA TYPES (DATA, VOICE, SECURITY, ETC.) SHALL NOT SHARE THE SAME J-HOOK, CONDUIT, CONDUIT SLEEVE, CORE, ETC.
6. ALL CONDUITS FOR DATA, VOICE, AND SECURITY DEVICES SHALL ROUTE FROM THE DEVICE LOCATION AND TERMINATE ABOVE AN ACCESSIBLE CEILING IN THE SAME ROOM WHERE THE DEVICE IS LOCATED. IF THE ROOM WHERE THE DEVICE IS LOCATED DOES NOT HAVE AN ACCESSIBLE CEILING, THE CONDUIT SHALL ROUTE TO THE NEAREST ACCESSIBLE CEILING OFF OF THE CORRIDOR. CONDUIT PATHWAY SHALL TAKE THE SHORTEST ROUTE TO THE APPLICABLE DATA ROOM TO MINIMIZE THE CABLE LENGTH.
7. CONDUIT SEGMENTS SHALL BE NO MORE THAN 100-FEET IN LENGTH WITH NO MORE THAN THE EQUIVALENT OF (2) 90 DEGREE BENDS BETWEEN PULLING POINTS.
8. CONDUITS SHALL MAINTAIN A BEND RADIUS OF 6 TIMES THE DIAMETER OF THE CONDUIT FOR CONDUITS 2-INCHES OR SMALLER AND 10 TIMES THE DIAMETER OF THE CONDUIT FOR CONDUITS GREATER THAN 2-INCHES.
9. ALL CONDUITS SHALL HAVE A PULL STRING INSTALLED FOR PULLING OF CABLE. CLEARLY LABEL AS "PULL STRING" INDICATING OPPOSITE END LOCATION.
10. ALL SPARE CONDUITS OR CONDUITS FILLED WITH LESS THAN THE MAXIMUM ALLOWED FILL RATIO SHALL HAVE A PULL STRING INSTALLED AND LEFT FOR FUTURE PULLING OF CABLE. CLEARLY LABEL AS "PULL STRING" INDICATING OPPOSITE END LOCATION.
11. ALL ALTERNATES SHOWN IN THE SECURITY DRAWINGS SHALL HAVE THE ROUGH INS AND PATHWAYS INSTALLED EVEN IF THE OWNER DOESN'T ACCEPT THE INSTALLATION OF THE SECURITY DEVICES. (BY DIV 26)

KEYED NOTES

1. CONTRACTOR SHALL SUBMIT PRICING FOR THESE DEVICES AS AN ADD ALTERNATE TO THE BASE BID.
2. CONTRACTOR SHALL PROVIDE ROUGH-IN ONLY AT THIS TIME, TO INCLUDE EMT AND CABLING TO DEVICE LOCATION(S) AND BACK TO TERMINATION POINT.
3. ES DEVICES (ELECTRONIC LOCKS) SHALL BE PROVIDED BY DIV 8
4. FULL CONTROL FUNCTIONS OF DOOR HARDWARE AND ACCESS CONTROL DEVICES AT THIS LOCATION SHALL BE MAINTAINED FOR UP TO 90 MINUTES IN THE EVENT OF LOSS OF POWER TO THE BUILDING. THE SECURITY CONTRACTOR IS RESPONSIBLE FOR PROVIDING BACK UP POWER FOR SECURIT DEVICES AT THESE LOCATIONS.

muñoz & company
1017 NORTH MAIN SUITE 300
SAN ANTONIO, TEXAS 78212
O. 210.349.1163 F. 210.525.1038
WWW.MUNOZ-CO.COM

COMBS Consulting Group
10 years
technology & security
SAN ANTONIO
8200 IH-10 West, Ste. 103
San Antonio, Texas 78230
Phone : 210-698-7887
AUSTIN
4425 S. Mopac
Bldg. 4, Ste. 800
Austin, Texas 78735

REGISTERED COMMUNICATIONS DISTRIBUTION DESIGNER
Bicsi
BILL E HENRICH
REG. No. 191959R
EXPIRES 12-31-19
SIGNATURE
11-6-2018

UTRGV
The University of Texas Rio Grande Valley

UNIVERSITY OF TEXAS RIO GRANDE VALLEY
SCHOOL OF MEDICINE
TEAM BASED LEARNING CENTER

PROJECT NO: 903-1159
EDINBURG, TX
100% CONSTRUCTION DOCUMENTS

Issue/Revision

#	DESCRIPTION	DATE

Sheet Title
SECURITY LEVEL ONE - FLOOR PLAN

BP2

Date
NOVEMBER 08, 2018

Project Number	Drawn By	Checked By
A17021.00	PM	DR

Sheet Number
TS-201

GENERAL NOTES

1. ALL CONDUIT PATHWAYS, ROUGH-INS, CONDUIT SLEEVES, ETC. INDICATED ON THE SECURITY DRAWINGS ARE TO BE PROVIDED AND INSTALLED BY DIVISION 26.
2. ALL POWER INDICATED ON THE SECURITY DRAWINGS ARE TO BE PROVIDED AND INSTALLED BY DIVISION 26.
3. CONTRACTOR SHALL RESTORE ALL PENETRATIONS PROVIDED THROUGH FIRE RATED WALLS/STRUCTURES FOR DATA, VOICE, AND SECURITY CABLING BACK TO THE ORIGINAL RATING.
4. CONTRACTOR SHALL RESTORE ALL PENETRATIONS PROVIDED THROUGH NON-RATED WALLS/STRUCTURES FOR DATA, VOICE, AND SECURITY CABLING FOR SOUND TO REDUCE NOISE TRAVELING THROUGH PENETRATIONS.
5. CABLING FOR DATA, VOICE, AND SECURITY SHALL BE ROUTED IN SEPARATE PATHWAYS IN J-HOOKS, CONDUITS, CONDUIT SLEEVES, CORES, ETC. THROUGHOUT THE ENTIRE PATHWAY. DIFFERENT MEDIA TYPES (DATA, VOICE, SECURITY, ETC.) SHALL NOT SHARE THE SAME J-HOOK, CONDUIT, CONDUIT SLEEVE, CORE, ETC.
6. ALL CONDUITS FOR DATA, VOICE, AND SECURITY DEVICES SHALL ROUTE FROM THE DEVICE LOCATION AND TERMINATE ABOVE AN ACCESSIBLE CEILING IN THE SAME ROOM WHERE THE DEVICE IS LOCATED. IF THE ROOM WHERE THE DEVICE IS LOCATED DOES NOT HAVE AN ACCESSIBLE CEILING, THE CONDUIT SHALL ROUTE TO THE NEAREST ACCESSIBLE CEILING OFF OF THE CORRIDOR. CONDUIT PATHWAY SHALL TAKE THE SHORTEST ROUTE TO THE APPLICABLE DATA ROOM TO MINIMIZE THE CABLE LENGTH.
7. CONDUIT SEGMENTS SHALL BE NO MORE THAN 100-FEET IN LENGTH WITH NO MORE THAN THE EQUIVALENT OF (2) 90 DEGREE BENDS BETWEEN PULLING POINTS.
8. CONDUITS SHALL MAINTAIN A BEND RADIUS OF 6 TIMES THE DIAMETER OF THE CONDUIT FOR CONDUITS 2-INCHES OR SMALLER AND 10 TIMES THE DIAMETER OF THE CONDUIT FOR CONDUITS GREATER THAN 2-INCHES.
9. ALL CONDUITS SHALL HAVE A PULL STRING INSTALLED FOR PULLING OF CABLE. CLEARLY LABEL AS "PULL STRING" INDICATING OPPOSITE END LOCATION.
10. ALL SPARE CONDUITS OR CONDUITS FILLED WITH LESS THAN THE MAXIMUM ALLOWED FILL RATIO SHALL HAVE A PULL STRING INSTALLED AND LEFT FOR FUTURE PULLING OF CABLE. CLEARLY LABEL AS "PULL STRING" INDICATING OPPOSITE END LOCATION.
11. ALL ALTERNATES SHOWN IN THE SECURITY DRAWINGS SHALL HAVE THE ROUGH INS AND PATHWAYS INSTALLED EVEN IF THE OWNER DOESN'T ACCEPT THE INSTALLATION OF THE SECURITY DEVICES. (BY DIV 26)

KEYED NOTES

1. CONTRACTOR SHALL SUBMIT PRICING FOR THESE DEVICES AS AN ADD ALTERNATE TO THE BASE BID.
2. CONTRACTOR SHALL PROVIDE ROUGH-IN ONLY AT THIS TIME, TO INCLUDE EMT AND CABLING TO DEVICE LOCATION(S) AND BACK TO TERMINATION POINT.
3. ES DEVICES (ELECTRONIC LOCKS) SHALL BE PROVIDED BY DIV 8
4. FULL CONTROL FUNCTIONS OF DOOR HARDWARE AND ACCESS CONTROL DEVICES AT THIS LOCATION SHALL BE MAINTAINED FOR UP TO 90 MINUTES IN THE EVENT OF LOSS OF POWER TO THE BUILDING. THE SECURITY CONTRACTOR IS RESPONSIBLE FOR PROVIDING BACK UP POWER FOR SECURIT DEVICES AT THESE LOCATIONS.

1 SECURITY LEVEL TWO - FLOOR PLAN
1/8" = 1'-0"

muñoz & company
1017 NORTH MAIN SUITE 300
SAN ANTONIO, TEXAS 78212
O. 210.349.1163 F. 210.525.1038
WWW.MUNOZ-CO.COM

COMBS Consulting Group
10 years
technology & security
SAN ANTONIO
8200 IH-10 West, Ste. 103
San Antonio, Texas 78230
Phone : 210-698-7887
AUSTIN
4425 S. Mopac
Bldg. 4, Ste. 800
Austin, Texas 78735

REGISTERED COMMUNICATIONS DISTRIBUTION DESIGNER
Bicsi
BILL E HENRICH
REG. No. 191959R
EXPIRES 12-31-19
SIGNATURE
11-6-2018

UTRGV
The University of Texas Rio Grande Valley

UNIVERSITY OF TEXAS RIO GRANDE VALLEY
SCHOOL OF MEDICINE
TEAM BASED LEARNING CENTER

PROJECT NO: 903-1159
EDINBURG, TX
100% CONSTRUCTION DOCUMENTS

Issue/Revision

#	DESCRIPTION	DATE

Sheet Title
SECURITY LEVEL TWO - FLOOR PLAN

BP2

Date
NOVEMBER 08, 2018

Project Number	Drawn By	Checked By
A17021.00	PM	DR

Sheet Number
TS-202

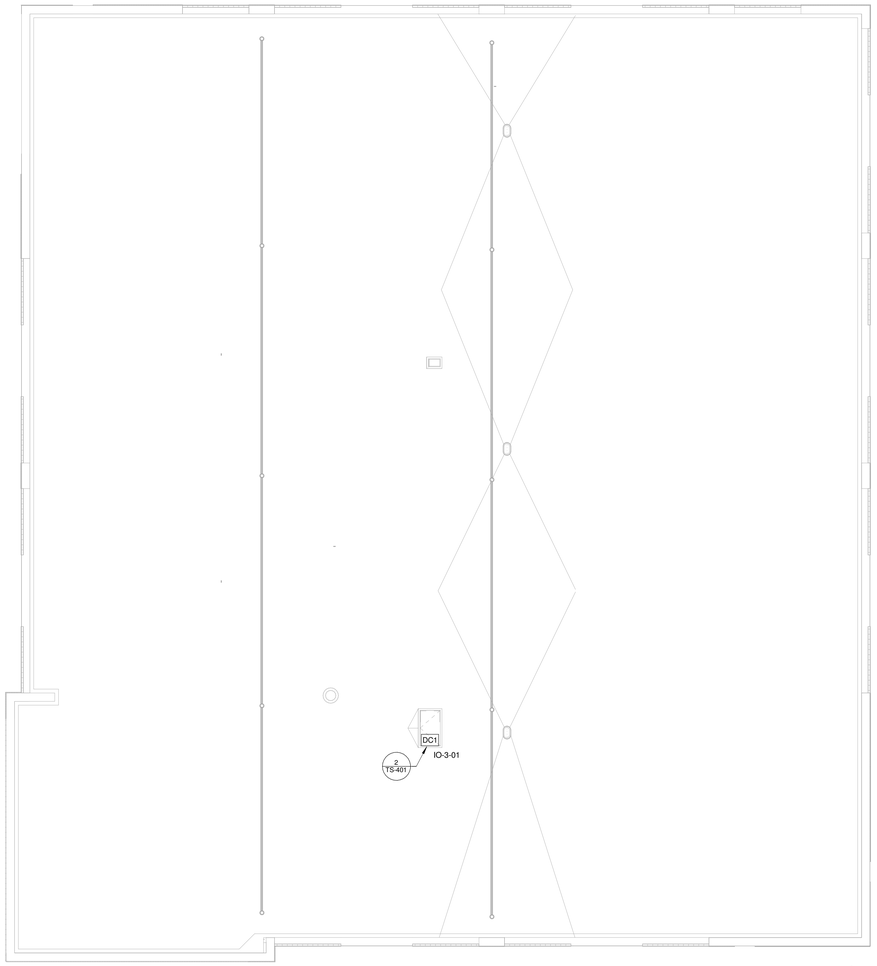

1 SECURITY ROOF LEVEL - ALTERNATE BID FLOOR PLAN
1/8" = 1'-0"

GENERAL NOTES

1. ALL CONDUIT PATHWAYS, ROUGH-INS, CONDUIT SLEEVES, ETC. INDICATED ON THE SECURITY DRAWINGS ARE TO BE PROVIDED AND INSTALLED BY DIVISION 26.
2. ALL POWER INDICATED ON THE SECURITY DRAWINGS ARE TO BE PROVIDED AND INSTALLED BY DIVISION 26.
3. CONTRACTOR SHALL RESTORE ALL PENETRATIONS PROVIDED THROUGH FIRE RATED WALLS/STRUCTURES FOR DATA, VOICE, AND SECURITY CABLING BACK TO THE ORIGINAL RATING.
4. CONTRACTOR SHALL RESTORE ALL PENETRATIONS PROVIDED THROUGH NON-RATED WALLS/STRUCTURES FOR DATA, VOICE, AND SECURITY CABLING FOR SOUND TO REDUCE NOISE TRAVELING THROUGH PENETRATIONS.
5. CABLING FOR DATA, VOICE, AND SECURITY SHALL BE ROUTED IN SEPARATE PATHWAYS IN J-HOOKS, CONDUITS, CONDUIT SLEEVES, CORES, ETC. THROUGHOUT THE ENTIRE PATHWAY. DIFFERENT MEDIA TYPES (DATA, VOICE, SECURITY, ETC.) SHALL NOT SHARE THE SAME J-HOOK, CONDUIT, CONDUIT SLEEVE, CORE, ETC.
6. ALL CONDUITS FOR DATA, VOICE, AND SECURITY DEVICES SHALL ROUTE FROM THE DEVICE LOCATION AND TERMINATE ABOVE AN ACCESSIBLE CEILING IN THE SAME ROOM WHERE THE DEVICE IS LOCATED. IF THE ROOM WHERE THE DEVICE IS LOCATED DOES NOT HAVE AN ACCESSIBLE CEILING, THE CONDUIT SHALL ROUTE TO THE NEAREST ACCESSIBLE CEILING OFF OF THE CORRIDOR. CONDUIT PATHWAY SHALL TAKE THE SHORTEST ROUTE TO THE APPLICABLE DATA ROOM TO MINIMIZE THE CABLE LENGTH.
7. CONDUIT SEGMENTS SHALL BE NO MORE THAN 100-FEET IN LENGTH WITH NO MORE THAN THE EQUIVALENT OF (2) 90 DEGREE BENDS BETWEEN PULLING POINTS.
8. CONDUITS SHALL MAINTAIN A BEND RADIUS OF 6 TIMES THE DIAMETER OF THE CONDUIT FOR CONDUITS 2-INCHES OR SMALLER AND 10 TIMES THE DIAMETER OF THE CONDUIT FOR CONDUITS GREATER THAN 2-INCHES.
9. ALL CONDUITS SHALL HAVE A PULL STRING INSTALLED FOR PULLING OF CABLE. CLEARLY LABEL AS "PULL STRING" INDICATING OPPOSITE END LOCATION.
10. ALL SPARE CONDUITS OR CONDUITS FILLED WITH LESS THAN THE MAXIMUM ALLOWED FILL RATIO SHALL HAVE A PULL STRING INSTALLED AND LEFT FOR FUTURE PULLING OF CABLE. CLEARLY LABEL AS "PULL STRING" INDICATING OPPOSITE END LOCATION.
11. ALL ALTERNATES SHOWN IN THE SECURITY DRAWINGS SHALL HAVE THE ROUGH INS AND PATHWAYS INSTALLED EVEN IF THE OWNER DOESN'T ACCEPT THE INSTALLATION OF THE SECURITY DEVICES. (BY DIV 26)

KEYED NOTES

1. CONTRACTOR SHALL SUBMIT PRICING FOR THESE DEVICES AS AN ADD ALTERNATE TO THE BASE BID.
2. CONTRACTOR SHALL PROVIDE ROUGH-IN ONLY AT THIS TIME, TO INCLUDE EMT AND CABLING TO DEVICE LOCATION(S) AND BACK TO TERMINATION POINT.
3. ES DEVICES (ELECTRONIC LOCKS) SHALL BE PROVIDED BY DIV 8
4. FULL CONTROL FUNCTIONS OF DOOR HARDWARE AND ACCESS CONTROL DEVICES AT THIS LOCATION SHALL BE MAINTAINED FOR UP TO 90 MINUTES IN THE EVENT OF LOSS OF POWER TO THE BUILDING. THE SECURITY CONTRACTOR IS RESPONSIBLE FOR PROVIDING BACK UP POWER FOR SECURIT DEVICES AT THESE LOCATIONS.

muñoz & company
1017 NORTH MAIN SUITE 300
SAN ANTONIO, TEXAS 78212
O. 210.349.1163 F. 210.525.1038
WWW.MUNOZ-CO.COM

COMBS Consulting Group
10 years
technology & security
SAN ANTONIO
8200 IH-10 West, Ste. 103
San Antonio, Texas 78230
Phone : 210-698-7887
AUSTIN
4425 S. Mopac
Bldg. 4, Ste. 800
Austin, Texas 78735

REGISTERED COMMUNICATIONS DISTRIBUTION DESIGNER
Bicsi
BILL E HENRICH
REG. No. 191959R
EXPIRES 12-31-19
SIGNATURE
11-6-2018

UTRGV
The University of Texas Rio Grande Valley

UNIVERSITY OF TEXAS RIO GRANDE VALLEY
SCHOOL OF MEDICINE
TEAM BASED LEARNING CENTER
PROJECT NO: 903-1159
EDINBURG, TX
100% CONSTRUCTION DOCUMENTS

Issue/Revision

#	DESCRIPTION	DATE

Sheet Title
SECURITY ROOF LEVEL - FLOOR PLAN

BP2

Date
NOVEMBER 08, 2018

Project Number	Drawn By	Checked By
A17021.00	PM	DR

Sheet Number
TS-203

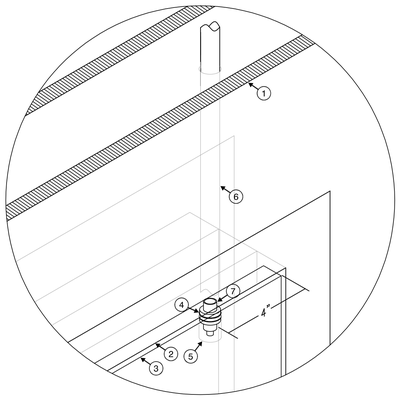

KEYED NOTES:

1. SCHEDULED PARTITION.
2. HEAD OF DOOR FRAME. PROVIDE TAB AT DOOR FRAME TO SECURE CONDUIT DIRECTLY ABOVE DOOR POSITION SWITCH.
3. SCHEDULED DOOR.
4. 15/16" DIAMETER HOLE IN THE HEAD OF FRAME FOR CONCEALED DOOR CONTACT.
5. 15/16" DIAMETER X 1 5/8" DEEP HOLE IN TOP OF DOOR FOR CONCEALED DOOR CONTACT MAGNET.
6. 1/2" CONDUIT FROM 6" X 6" X 4" JUNCTION BOX ABOVE DOOR (BY DIV 26).
7. DOOR CONTACT (REFERENCE SPECIFICATION).

DOOR CONTACT - SINGLE DOOR RECESSED

1 / TS-400

SCALE: SCALE

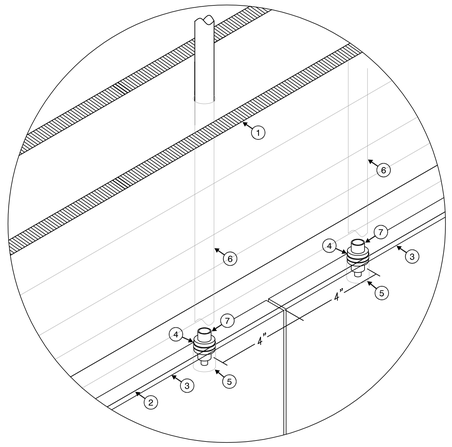

KEYED NOTES:

1. SCHEDULED PARTITION.
2. HEAD OF DOOR FRAME. PROVIDE TAB AT DOOR FRAME TO SECURE CONDUIT DIRECTLY ABOVE DOOR POSITION SWITCH.
3. SCHEDULED DOOR.
4. 15/16" DIAMETER HOLE IN THE HEAD OF FRAME FOR CONCEALED DOOR CONTACT.
5. 15/16" DIAMETER X 1 5/8" DEEP HOLE IN TOP OF DOOR FOR CONCEALED DOOR CONTACT MAGNET.
6. 1/2" CONDUIT FROM 6" X 6" X 4" JUNCTION BOX ABOVE DOOR (BY DIV 26).
7. DOOR CONTACT (REFERENCE SPECIFICATION).

DOOR CONTACT - DOUBLE DOOR RECESSED

2 / TS-400

SCALE: SCALE

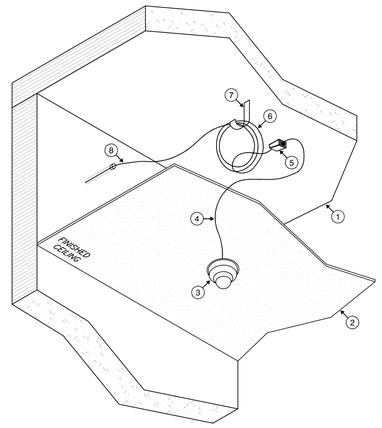

KEYED NOTES:

1. CEILING DECK AS SCHEDULED.
2. LAY-IN CEILING AS SCHEDULED.
3. CEILING MOUNTED INTERIOR IP VIDEO SURVEILLANCE DOME CAMERA (REFERENCE DIV 28 SPECIFICATIONS FOR EXACT MODEL).
4. PATCH CORD (BY DIV 27).
5. SURFACE MOUNT DATA OUTLET ABOVE ACCESSIBLE CEILING (BY DIV 27).
6. 20 FOOT SERVICE LOOP ABOVE ACCESIBLE CEILING NEATLY COILED AND SECURED TO J-HOOK (BY DIV 27).
7. J-HOOK ABOVE ACCESSIBLE CEILING (BY DIV 27).
8. DATA CABLE ABOVE ACCESSIBLE CEILING (BY DIV 27).

TYPICAL INTERIOR CEILING MOUNTED SURVEILLANCE CAMERA

3 / TS-400

SCALE: N.T.S.

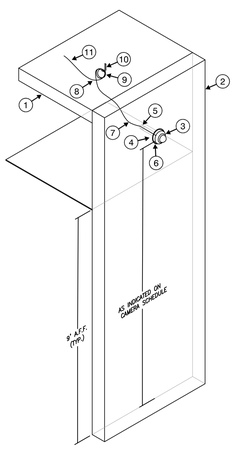

KEYED NOTES:

1. CEILING DECK AS SCHEDULED.
2. EXTERIOR WALL AS SCHEDULED.
3. EXTERIOR WALL MOUNTED IP VIDEO SURVEILLANCE DOME CAMERA (REFERENCE SPECIFICATION)
4. 4 11/16-INCH x 4 11/16-INCH x 2 1/8-INCH RECESSED DOUBLE GANG BOX (BY DIV 26).
5. 3/4-INCH EMT CONDUIT FROM DOUBLE GANG BOX WITH 200 LBS PULL STRING AND NYLON BUSHING STUBBED OUT ABOVE ACCESSIBLE CEILING (BY DIV 26).
6. WEATHERTIGHT GASKET FOR WEATHERPROOF BACKBOX (BY DIV 26).
7. PATCH CORD AS SPECIFIED.
8. SURFACE MOUNT BOX ABOVE ACCESSIBLE CEILING (BY DIV 27).
9. 20 FOOT SERVICE LOOP ABOVE ACCESSIBLE CEILING NEATLY COILED AND SECURED TO J-HOOK (BY DIV 27).
10. J-HOOK ABOVE ACCESSIBLE CEILING (BY DIV 27).
11. DATA CABLE ABOVE ACCESSIBLE CEILING (BY DIV 27).

TYPICAL EXTERIOR WALL MOUNTED SURVEILLANCE CAMERA

4 / TS-400

SCALE: N.T.S.

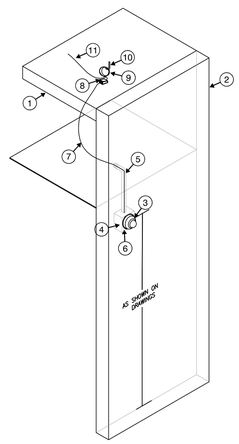

KEYED NOTES:

1. CEILING DECK AS SCHEDULED.
2. INTERIOR WALL AS SCHEDULED.
3. INTERIOR WALL MOUNTED IP VIDEO SURVEILLANCE DOME CAMERA (REFERENCE SPECIFICATION).
4. 4 11/16-INCH x 4 11/16-INCH x 2 1/8-INCH RECESSED DOUBLE GANG BOX (BY DIV 26).
5. 3/4-INCH EMT CONDUIT FROM DOUBLE GANG BOX WITH 200 LBS PULL STRING AND NYLON BUSHING STUBBED OUT ABOVE ACCESSIBLE CEILING (BY DIV 26).
6. DOUBLE GANG PLASTER RING (BY DIV 26).
7. PATCH CORD AS SPECIFIED.
8. SURFACE MOUNT BOX ABOVE ACCESSIBLE CEILING (BY DIV 27).
9. 20 FOOT SERVICE LOOP ABOVE ACCESSIBLE CEILING NEATLY COILED AND SECURED TO J-HOOK (BY DIV 27).
10. J-HOOK ABOVE ACCESSIBLE CEILING (BY DIV 27).
11. DATA CABLE ABOVE ACCESSIBLE CEILING (BY DIV 27).

TYPICAL INTERIOR WALL MOUNTED SURVEILLANCE CAMERA

5 / TS-400

SCALE: N.T.S.

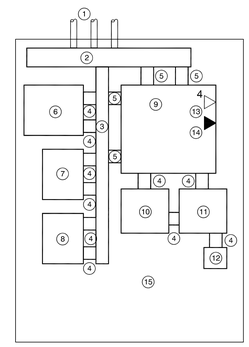

KEYED NOTES:

1. CONDUIT FEEDS FROM FIELD.
2. 8-INCH H X 8-INCH D X 4-FOOT W GUTTER RACEWAY WITH COVER.
3. 4-INCH FINGERDUCT RACEWAY WITH COVER.
4. 2-INCH METALLIC CONDUIT.
5. 4-INCH METALLIC CONDUIT.
6. ACCESS CONTROL PANEL.
7. INTRUSION DETECTION CONTROL PANEL.
8. INPUT/OUTPUT PANEL.
9. DEMARCATION ENCLOSURE.
10. DEVICE POWER SUPPLY.
11. LOCK POWER SUPPLY.
12. 120VAC EMERGENCY QUAD RECEPTACLE, NON-SITCHED, DEDICATED 20AMP.
13. NETWORK OUTLET (BY DIV. 27).
14. TELEPHONE INTERFACE (BY DIV. 27).
15. 8-FEET H X 4-FEET W X 1/2-INCH FIRE RATED PLYWOOD BACKBOARD.

TYPICAL SECURITY RISER BACKBOARD DETAIL

6 / TS-400

SCALE: N.T.S.

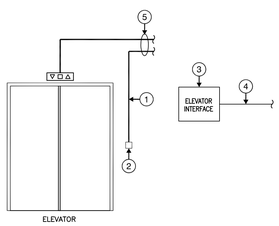

KEYED NOTES:

1. 1-INCH CONDUIT FROM THE CARD READER STUBBED OUT ABOVE ACCESSIBLE CEILING.
2. 4"X4"X2 1/8" DEEP BOX WITH SINGLE GANG DEVICE RING FLUSH MOUNTED FOR CARD READER.
3. ELEVATOR SECURITY SYSTEM INTERFACE PROVIDED, LOCATED, AND INSTALLED BY ELEVATOR CONTRACTOR.
4. 1-INCH CONDUIT FROM ELEVATOR SECURITY SYSTEM INTERFACE TO ELEVATOR EQUIPMENT. EXACT LOCATION TO BE COORDINATED WITH ELEVATOR CONTRACTOR.
5. IF CARD READER IS TO BE INSTALLED INSIDE OF ELEVATOR, THE ELEVATOR CONTRACTOR SHALL BE RESPONSIBLE FOR INSTALLING CABLE AND CARD READER PROVIDED BY THE SECURITY CONTRACTOR IN ELEVATOR SHAFT.

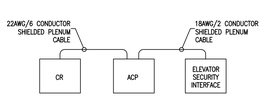

TYPICAL ELEVATOR CARD READER DIAGRAM

7 / TS-400

SCALE: N.T.S.

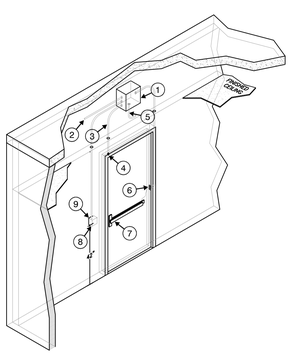

1. (1) 12-INCH WIDE X 12-INCH HIGH X 8-INCH DEEP JUNCTION BOX MOUNTED ABOVE ACCESSIBLE CEILING ON SECURE SIDE OF DOOR (BY DIV. 26).
2. (1) 1-INCH EMT CONDUIT FROM 12-INCH WIDE X 12-INCH HIGH X 8-INCH DEEP JUNCTION BOX TO ABOVE ACCESSIBLE CEILING ON SECURE SIDE OF DOOR FOR ACCESS CONTROL CABLE (BY DIV. 26).
3. (1) 1/2-INCH EMT CONDUIT FROM 12-INCH WIDE X 12-INCH HIGH X 8-INCH DEEP JUNCTION BOX TO HEAD OF DOOR FRAME FOR CONCEALED DOOR POSITION SWITCH. STUB CONDUIT INTO HEAD OF DOOR FRAME 6-INCHES FROM THE STRIKE SIDE OF THE DOOR. PROVIDE A 3-INCH BLOCKOUT FOR GROUTED DOORS (BY DIV. 26).
4. CONCEALED DOOR POSITION SWITCH (BY DIV. 28).
5. (1) 1/2-INCH EMT CONDUIT FROM 12-INCH WIDE X 12-INCH HIGH X 12-INCH DEEP JUNCTION BOX TO ACCESSIBLE CEILING ABOVE DOOR ON SECURE SIDE OF DOOR FOR REQUEST TO EXIT MOTION SENSOR (BY DIV. 28).
6. (1) 3/4-INCH EMT CONDUIT FROM 12-INCH WIDE X 12-INCH HIGH X 8-INCH DEEP JUNCTION BOX DOWN DOOR FRAME FOR POWER TRANSFER HINGE (BY DIV. 26).
7. (1) ELECTRIFIED EXIT DEVICE ON SECURE SIDE OF DOOR (BY DIV. 8).
8. (1) 3/4-INCH EMT CONDUIT FROM 12-INCH WIDE X 12-INCH HIGH X 8-INCH DEEP JUNCTION BOX TO A RECESSED DOUBLE GANG BOX WITH A SINGLE GANG PLASTER RING FOR CARD READER ON UNSECURE SIDE OF DOOR (BY DIV. 26).
9. (1) CARD READER ON UNSECURE SIDE OF DOOR (BY DIV. 28).

WALL MOUNTED CARD READER WITH ELECTRIFIED EXIT DEVICE AND CEILING MOUNTED REQUEST TO EXIT MOTION SENSOR

8 / TS-400

SCALE: N.T.S.

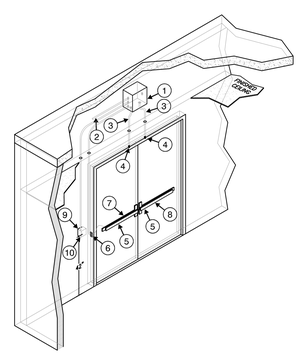

1. (1) 12-INCH WIDE X 12-INCH HIGH X 8-INCH DEEP JUNCTION BOX MOUNTED ABOVE ACCESSIBLE CEILING ON SECURE SIDE OF DOOR (BY DIV. 26).
2. (1) 1-INCH EMT CONDUIT FROM 12-INCH WIDE X 12-INCH HIGH X 8-INCH DEEP JUNCTION BOX TO ABOVE ACCESSIBLE CEILING ON SECURE SIDE OF DOOR FOR ACCESS CONTROL CABLE (BY DIV. 26).
3. (1) 1/2-INCH EMT CONDUIT FROM 12-INCH WIDE X 12-INCH HIGH X 8-INCH DEEP JUNCTION BOX TO HEAD OF DOOR FRAME FOR CONCEALED DOOR POSITION SWITCH. STUB CONDUIT INTO HEAD OF DOOR FRAME 6-INCHES FROM THE STRIKE SIDE OF THE DOOR. PROVIDE A 3-INCH BLOCKOUT FOR GROUTED DOORS (BY DIV. 26).
4. CONCEALED DOOR POSITION SWITCH (BY DIV. 28).
5. (1) REQUEST TO EXIT MOTION SENSOR ON SECURE SIDE OF DOOR (BY DIV. 28).
6. (1) 3/4-INCH EMT CONDUIT FROM 12-INCH WIDE X 12-INCH HIGH X 8-INCH DEEP JUNCTION BOX DOWN DOOR FRAME FOR POWER TRANSFER HINGE (BY DIV. 26).
7. (1) ELECTRIFIED EXIT DEVICE ON SECURE SIDE OF DOOR (BY DIV. 8).
8. (1) MECHANICAL EXIT DEVICE ON SECURE SIDE OF DOOR (BY DIV. 8).
9. (1) 3/4-INCH EMT CONDUIT FROM 12-INCH WIDE X 12-INCH HIGH X 8-INCH DEEP JUNCTION BOX TO A RECESSED DOUBLE GANG BOX WITH A SINGLE GANG PLASTER RING FOR CARD READER ON UNSECURE SIDE OF DOOR (BY DIV. 26).
10. (1) CARD READER ON UNSECURE SIDE OF DOOR (BY DIV. 28).

WALL MOUNTED CARD READER WITH SINGLE ELECTRIFIED EXIT DEVICE AND REQUEST TO EXIT INTEGRAL SWITCH

9 / TS-400

SCALE: N.T.S.

muñoz & company
1017 NORTH MAIN SUITE 300
SAN ANTONIO, TEXAS 78212
O. 210.349.1163 F. 210.525.1038
WWW.MUNOZ-CO.COM

COMBS Consulting Group
10 years technology & security
SAN ANTONIO
8200 IH-10 West, Ste. 103
San Antonio, Texas 78230
Phone : 210-698-7887
AUSTIN
4425 S. Mopac
Bldg. 4, Ste. 800
Austin, Texas 78735

REGISTERED COMMUNICATIONS DISTRIBUTION DESIGNER
Bicsi
BILL E HENRICH
REG. No. 191959R
EXPIRES 12-31-19
SIGNATURE
11-6-2018

UTRGV
The University of Texas Rio Grande Valley

UNIVERSITY OF TEXAS RIO GRANDE VALLEY
SCHOOL OF MEDICINE
TEAM BASED LEARNING CENTER
PROJECT NO: 903-1159
EDINBURG, TX
100% CONSTRUCTION DOCUMENTS

Issue/Revision

#	DESCRIPTION	DATE

Sheet Title
SECURITY TYPICAL DETAILS

BP2

Date
NOVEMBER 08, 2018

Project Number	Drawn By	Checked By
A17021.00	PM	DR

Sheet Number
TS-400

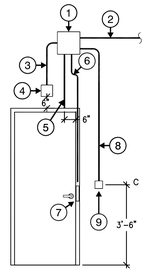

SINGLE DOOR

1. 12" X 12" X 12" JUNCTION BOX ABOVE ACCESSIBLE CEILING AT DOOR (SECURED SIDE). (BY DIV. 26)
2. 1" EMT CONDUIT TO NEAREST ACCESSIBLE CEILING (SECURED SIDE). (BY DIVISION 26)
3. 3/4" EMT CONDUIT FROM 12" X 12" X 12" JUNCTION BOX TO A RECESSED SINGLE GANG BOX INSTALLED HORIZONTALLY ABOVE DOOR FOR REQUEST-TO-EXIT / MOTION SENSOR DEVICE (SECURED SIDE). (BY. DIV. 26)
4. RECESSED SINGLE GANG BOX INSTALLED HORIZONTALLY FOR REQUEST TO EXIST / MOTION SENSOR DEVICE (SECURED SIDE). (BY DIV. 26).
5. 3/4" EMT CONDUIT FROM 12" X 12" X 12" JUNCTION BOX TO HEAD OF DOOR FRAME FOR DOOR POSITION SWITCH. STUB CONDUIT INTO HEAD OF DOOR FRAME 6" FROM STRIKE SIDE OF DOOR. PROVIDE 3" BLOCKOUT FOR GROUTED FRAMES. (BY DIV. 26)
6. 3/4" EMT CONDUIT FROM 12" X 12" X 12" JUNCTION BOX DOWN DOOR FRAME FOR ELECTRIC STRIKE LOCK POWER. (BY DIV. 26)
7. ELECTRIC STRIKE (BY DIVISION 8)
8. 3/4" EMT CONDUIT FROM 12" X 12" X 12" JUNCTION BOX TO RECESSED DOUBLE GANG BOX WITH A SINGLE GANG PLASTER RING FOR CARD READER. (BY DIV. 26)
9. RECESSED DOUBLE GANG BOX WITH SINGLE GANG PLASTER RING FOR CARD READER (UNSECURED SIDE). (BY DIV. 26)

1 / TS-401 TYPICAL CARD READER ROUGH-IN - ELECTRICK STRIKE

SCALE: N.T.S.

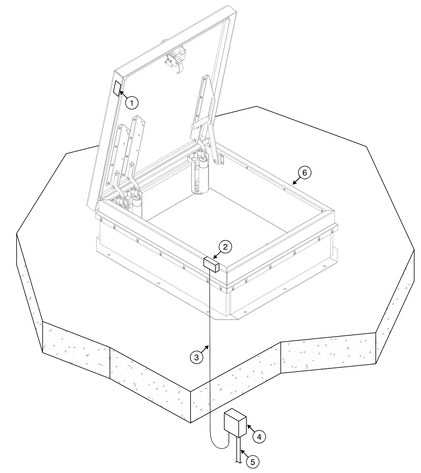

KEYED NOTES:

1. ROOF HATCH MAGNET ATTACHED TO ROOF HATCH.
2. SURFACE MOUNT ROOF HATCH POSITION SWITCH.
3. ARMORED CABLE WITH STRAPS FROM ROOF HATCH POSITION SWITCH TO JUNCTION BOX (BY DIV. 28).
4. (1) 4-INCH WIDE X 4-INCH HIGH X 2 1/8" DEEP JUNCTION BOX SURFACE MOUNTED 1'-6" FROM ROOF HATCH OPENING ON SECURE SIDE OF HATCH (BY DIV. 26).
5. 1-INCH EMT CONDUIT FROM DOUBLE GANG BOX WITH 200 LBS PULL STRING AND NYLON BUSHING STUBBED TO NEAREST ACCESSIBLE CEILING (BY DIV. 26).
6. ROOF HATCH AS SCHEDULED.

2 / TS-401 DOOR CONTACT - ROOF HATCH

SCALE: N.T.S.

University of Texas Rio Grande Valley
School of Medicine SURVEILLANCE SYSTEM

Camera No.	Mounting Height	Cable Type	Termination point	Power	Camera Type
C-E-01	11 FT - 0 IN AFG (FIELD VERIFY MOUNTING HEIGHTS)	CAT6A	Security Room 1.112	POE	180 Deg Fixed /Exterior
C-E-02	11 FT - 0 IN AFG (FIELD VERIFY MOUNTING HEIGHTS)	CAT6A	Security Room 1.112	POE	180 Deg Fixed /Exterior
C-E-03	11 FT - 0 IN AFG (FIELD VERIFY MOUNTING HEIGHTS)	CAT6A	Security Room 1.112	POE	180 Deg Fixed /Exterior
C-E-04	11 FT - 0 IN AFG (FIELD VERIFY MOUNTING HEIGHTS)	CAT6A	Security Room 1.112	POE	180 Deg Fixed /Exterior
C-1-01	CEILING (ROUGH-IN ONLY)	CAT6A	Security Room 1.112	POE	180 Deg Fixed /Interior
C-1-02	CEILING	CAT6A	Security Room 1.112	POE	180 Deg Fixed /Interior
C-1-04	CEILING	CAT6A	Security Room 1.112	POE	180 Deg Fixed /Interior
C-1-05	CEILING (ROUGH-IN ONLY)	CAT6A	Security Room 1.112	POE	180 Deg Fixed /Interior
C-2-01	CEILING	CAT6A	Data/IT 2.127	POE	180 Deg Fixed /Interior
C-2-05	CEILING	CAT6A	Data/IT 2.127	POE	180 Deg Fixed /Interior
C-2-06	CEILING	CAT6A	Data/IT 2.127	POE	180 Deg Fixed /Interior

University of Texas Rio Grande Valley
School of Medicine ACCESS CONTROL SCHEDULE

Card Reader No.	Location	Backup power required	Door Type	Cable Type	Termination Point
CR-1-01	DOOR 1.100		Single Door	(1) Plenum Rated Composite Multi-conductor Cable	Security Room 1.112
CR-1-02	DOOR 1.101		Single Door	(1) Plenum Rated Composite Multi-conductor Cable (ROUGH-IN ONLY)	Security Room 1.112
CR-1-03	DOOR 1.121		Double Door	(1) Plenum Rated Composite Multi-conductor Cable	Security Room 1.112
CR-1-04	DOOR 1.100G	YES	Double Door	(1) Plenum Rated Composite Multi-conductor Cable	Security Room 1.112
CR-1-05	DOOR 1.100H	YES	Double Door	(1) Plenum Rated Composite Multi-conductor Cable	Security Room 1.112
CR-1-06	DOOR INTO MECH RM 1.100G	YES	Single Door	(1) Plenum Rated Composite Multi-conductor Cable	Security Room 1.112
CR-1-07	DOOR INTO ELEC RM		Single Door	(1) Plenum Rated Composite Multi-conductor Cable	Security Room 1.112
CR-1-08	DOOR 1.112	YES	Single Door	(1) Plenum Rated Composite Multi-conductor Cable	Security Room 1.112
CR-1-09	DOOR 1.100E		Single Door	(1) Plenum Rated Composite Multi-conductor Cable	Security Room 1.112
CR-1-10	DOOR 1.100B		Single Door	(1) Plenum Rated Composite Multi-conductor Cable	Security Room 1.112
CR-1-11	DOOR 1.102A		Single Door	(1) Plenum Rated Composite Multi-conductor Cable (ROUGH-IN ONLY)	Security Room 1.112
CR-B-01 ALTERNATE	DOOR 1.109		Single Door	(1) Plenum Rated Composite Multi-conductor Cable	Security Room 1.112
CR-B-02 ALTERNATE	DOOR 1.108		Single Door	(1) Plenum Rated Composite Multi-conductor Cable	Security Room 1.112
CR-B-03 ALTERNATE	DOOR 1.107		Single Door	(1) Plenum Rated Composite Multi-conductor Cable	Security Room 1.112
CR-B-04 ALTERNATE	DOOR 1.106		Single Door	(1) Plenum Rated Composite Multi-conductor Cable	Security Room 1.112
CR-B-05 ALTERNATE	DOOR 1.105		Single Door	(1) Plenum Rated Composite Multi-conductor Cable	Security Room 1.112
CR-B-06 ALTERNATE	DOOR 1.104		Single Door	(1) Plenum Rated Composite Multi-conductor Cable	Security Room 1.112
CR-B-07 ALTERNATE	DOOR 1.103		Single Door	(1) Plenum Rated Composite Multi-conductor Cable	Security Room 1.112
CR-B-08 ALTERNATE	DOOR 1.114		Single Door	(1) Plenum Rated Composite Multi-conductor Cable	Security Room 1.112
CR-B-09 ALTERNATE	DOOR 1.113		Single Door	(1) Plenum Rated Composite Multi-conductor Cable	Security Room 1.112
CR-B-10 ALTERNATE	DOOR 1.102		Single Door	(1) Plenum Rated Composite Multi-conductor Cable	Security Room 1.112
CR-2-01	DOOR 2.100A		Single Door	(1) Plenum Rated Composite Multi-conductor Cable	Data/IT 2.128
CR-2-02	DOOR 2.100N		Single Door	(1) Plenum Rated Composite Multi-conductor Cable	Data/IT 2.128
CR-2-03	DOOR 2.130		Single Door	(1) Plenum Rated Composite Multi-conductor Cable	Data/IT 2.128
CR-2-04	DOOR 2.128	YES	Single Door	(1) Plenum Rated Composite Multi-conductor Cable	Data/IT 2.128
CR-2-05	DOOR 2S2		Single Door	(1) Plenum Rated Composite Multi-conductor Cable	Data/IT 2.128
CR-2-06	DOOR 2.100M		Single Door	(1) Plenum Rated Composite Multi-conductor Cable	Data/IT 2.128
CR-2-07	DOOR 2.106A		Single Door	(1) Plenum Rated Composite Multi-conductor Cable	Data/IT 2.128
CR-2-08	DOOR 2.135		Single Door	(1) Plenum Rated Composite Multi-conductor Cable	Data/IT 2.128
CR-2-09	DOOR 2.126		Single Door	(1) Plenum Rated Composite Multi-conductor Cable	Data/IT 2.128

University of Texas Rio Grande Valley
School of Medicine INPUT SCHEDULE

Device Point Number	Device Type	LOCATION	Termination Room Number	Cable Type
IO-1-01	DOOR CONTACT	DOOR 1.100A	Security Room 1.112	22AWG, 4 conductor Plenum Rated
IO-1-02	DOOR CONTACT	DOOR 1S1A	Security Room 1.112	22AWG, 4 conductor Plenum Rated
IO-1-06	DOOR CONTACT	DOOR 1S2A	Security Room 1.112	22AWG, 4 conductor Plenum Rated
IO-1-07	DOOR CONTACT	DOOR 1.102A	Security Room 1.112	22AWG, 4 conductor Plenum Rated
IO-1-08	DOOR CONTACT	DOOR 1.100F	Security Room 1.112	22AWG, 4 conductor Plenum Rated
IO-3-01	OVERHEAD DOOR CONTACT	ROOF HATCH	Data/IT 2.127	22AWG, 4 conductor Plenum Rated

muñoz & company
1017 NORTH MAIN SUITE 300
SAN ANTONIO, TEXAS 78212
O. 210.349.1163 F. 210.525.1038
WWW.MUNOZ-CO.COM

COMBS Consulting Group
10 years
technology & security
SAN ANTONIO
8200 IH-10 West, Ste. 103
San Antonio, Texas 78230
Phone : 210-698-7887
AUSTIN
4425 S. Mopac
Bldg. 4, Ste. 800
Austin, Texas 78735

REGISTERED COMMUNICATIONS DISTRIBUTION DESIGNER
Bicsi
BILL E HENRICH
REG. No. 191959R
EXPIRES 12-31-19
SIGNATURE
11-6-2018

UTRGV
The University of Texas Rio Grande Valley

UNIVERSITY OF TEXAS RIO GRANDE VALLEY
SCHOOL OF MEDICINE
TEAM BASED LEARNING CENTER
PROJECT NO: 903-1159
EDINBURG, TX
100% CONSTRUCTION DOCUMENTS

Issue/Revision

#	DESCRIPTION	DATE

Sheet Title
SECURITY TYPICAL DETAILS AND SCHEDULES

BP2

Date
NOVEMBER 08, 2018

Project Number	Drawn By	Checked By
A17021.00	PM	DR

Sheet Number
TS-401