SOFTBALL FIELD FACILITIES
MUNICIPAL PARK
McAllen, Texas

ENGINEER:

CIVIL ENGINEER
HALFF ASSOCIATES, INC.
5000 WEST MILITARY HWY, ST. 100
McALLEN, TX. 78503
CONTACT: ROBERT L. SAENZ, PE
EMAIL: RSAENZ@HALFF.COM
TEL: (956) 664-0286

ELECTRICAL ENGINEER
HALFF ASSOCIATES, INC.
5000 WEST MILITARY HWY, ST. 100
McALLEN, TX. 78503
CONTACT: TOM DEARMIN, PE
EMAIL: TDEARMIN@HALFF.COM
TEL: (956) 664-0286

MECHANICAL/PLUMBING ENGINEER
HALFF ASSOCIATES, INC.
5000 WEST MILITARY HWY, ST. 100
McALLEN, TX. 78503
CONTACT: HUGO AVILA, PE
EMAIL: HAVILA@HALFF.COM
TEL: (956) 664-0286

STRUCTURAL ENGINEER
CHANIN ENGINEERING
400 NOLANA, SUITE H2
McALLEN, TX 78504
CONTACT: MIGUEL CHANIN, PE
EMAIL: MIGUEL@CHANINENGINEERING.COM
TEL: (956) 687-9421

LANDSCAPE ARCHITECT:

HALFF ASSOCIATES, INC.
14800 ST. MARY'S LANE SUITE 160
HOUSTON, TEXAS 77079-2943
CONTACT: TIMOTHY W. MAY, PLA
EMAIL: TMAY@HALFF.COM
TEL: (713) 588-2484

IRRIGATION:

CITY OF McALLEN
PARKS & RECREATION
1000 S WARE ROAD
McALLEN, TX 78501
CONTACT: GERARDO GARCIA
EMAIL: GERARDO.GARCIA@MCALLEN.NET
TEL: (956) 681-3325

ARCHITECT:

BSG ARCHITECTS
3301 N MCCOLL ROAD
McALLEN, TX. 78501
CONTACT: ROBERT SIMPSON
EMAIL: BOBS@BSGARCHITECTS.COM
TEL: (956) 630-9494

OWNER:

CITY OF McALLEN
PARKS & RECREATION
1000 S WARE ROAD
McALLEN, TX 78501
CONTACT: MIKE HERNANDEZ
EMAIL: MHERNANDEZ@MCALLEN.NET
TEL: (956) 681-3333

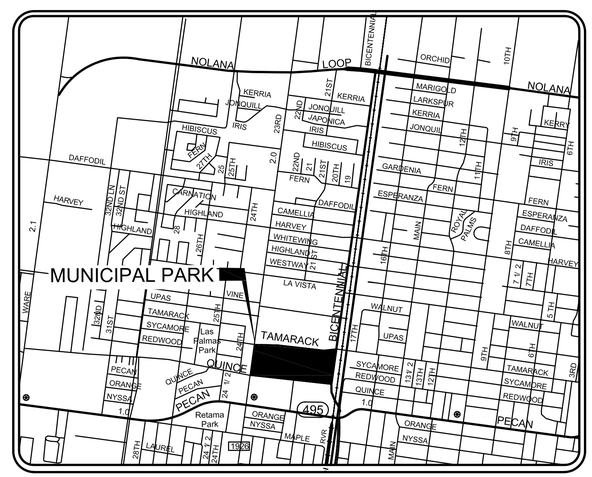

LOCATION MAP
NOT TO SCALE

TDLR NO. EABPRJB8816289

HALFF
5000 WEST MILITARY HWY, SUITE 100
McALLEN, TX 78503
TEL (956) 664-0286
FAX (956) 664-0282
TBPE FIRM #F-312

AVO: 33348.001 DATE: JULY 2018

INDEX TO DRAWINGS

COVER SHEET

CIVIL
C0.01 KEY MAP
C0.02 GENERAL NOTES
C0.03 DEMOLITION PLAN (FOR INFORMATION ONLY)
C0.04 DEMOLITION PLAN (FOR INFORMATION ONLY)
C1.01 PAVING & DIMENSION CONTROL PLAN
C1.02 PAVING & DIMENSION CONTROL PLAN
C2.01 GRADING PLAN
C2.02 GRADING PLAN
C3.01 DRAINAGE PLAN
C3.02 DRAINAGE PLAN
C4.01 DRAINAGE AREA MAP
C4.02 DRAINAGE AREA MAP
C5.01 UTILITY PLAN
C6.00 SUGGESTED EROSION CONTROL PLAN
C7.00 SUGGESTED EROSION CONTROL DETAILS
C8.00 PAVING DETAILS
C8.01 PAVING DETAILS
C9.00 WATER DETAILS
C10.00 SEWER DETAILS
C11.00 STORM DETAILS
C11.01 STORM DETAILS
C11.02 STORM DETAILS

ARCHITECTURE
A2.1 FLOOR PLAN & REFLECTED CLG. PLAN
A2.2 ENLARGED PLANS
A2.3 INTERIOR ELEVATIONS
A3.1 EXT. ELEVATIONS & ROOF PLAN
A4.1 WALL SECTIONS
A4.2 WALL SECTIONS
A4.3 WALL SECTIONS
A5.1 WALL DETAILS

STRUCTURAL
S1.00 GENERAL NOTES
S1.01 GENERAL NOTES
S1.02 EXCAVATION PLAN
S1.03 COMPONENTS AND CLADDING
S2.00 TYPICAL DETAILS
S2.01 TYPICAL DETAILS
S2.02 TYPICAL DETAILS
S3.00 FOUNDATION/CMU WALL PLANS
S4.00 FRAMING PLANS
S5.00 DETAILS
S5.01 DETAILS

MECHANICAL
M0.01 MECHANICAL GENERAL NOTES
M1.01 MECHANICAL PLAN
M2.01 MECHANICAL SCHEDULE

ELECTRICAL
E0.01 ELECTRICAL LEGEND & NOTES
ED1.00 EXISTING ELECTRICAL DEMOLITION SITE PLAN
E1.00 ELECTRICAL SITE PLAN - AREA 1
E1.01 ELECTRICAL SITE PLAN - AREA 2
E1.02 SECURITY SITE PLAN - AREA 1
E1.03 SECURITY SITE PLAN - AREA 2
E1.04 CONCESSION BUILDING ELECTRICAL PLANS
E2.01 ELECTRICAL RISER DIAGRAM
E3.01 ELECTRICAL SCHEDULES
E3.02 ELECTRICAL SCHEDULES
E3.03 ELECTRICAL SCHEDULES
E3.04 ELECTRICAL SCHEDULES
E4.01 ELECTRICAL DETAILS
E4.02 ELECTRICAL DETAILS

PLUMBING
P0.01 PLUMBING GENERAL LEGEND AND OVERALL SITE PLAN
P1.01 PLUMBING PARTIAL SITE PLAN AND SANITARY SEWER PLAN
P1.02 PLUMBING DOMESTIC WATER PLAN
P2.01 PLUMBING DETAILS
P2.02 PLUMBING RISER SCHEMATIC DIAGRAMS
P3.01 PLUMBING SCHEDULES

LANDSCAPE ARCHITECTURE
L1.01 RELOCATION PLAN
L2.00 KEY MAP
L2.01 FLATWORK LAYOUT PLAN
L2.02 FLATWORK LAYOUT PLAN
L2.03 FLATWORK LAYOUT PLAN
L2.04 FLATWORK LAYOUT PLAN
L3.00 KEY MAP
L3.01 SITE PLAN
L3.02 SITE PLAN
L3.03 SITE PLAN
L3.04 SITE PLAN
L4.01 SITE DETAILS
L4.02 SITE DETAILS
L4.03 SITE DETAILS
L4.04 SITE DETAILS
L4.05 SITE DETAILS
L4.06 SITE DETAILS
L4.07 SITE DETAILS
L5.00 OVERALL PLANTING PLAN AND NOTES
L5.01 PLANTING PLAN
L5.02 PLANTING PLAN
L5.03 PLANTING PLAN
L5.04 PLANTING PLAN

IRRIGATION
I1.00 OVERALL IRRIGATION PLAN
I1.00.1 OVERALL IRRIGATION PLAN (W/O) COVERAGE)
I1.01 IRRIGATION NOTES
I1.1 IRRIGATION WEST SIDE PLAN
I1.1.1 IRRIGATION WEST SIDE PLAN (W/O COVERAGE)
I1.2 IRRIGATION EAST SIDE PLAN
I1.2.1 IRRIGATION EAST SIDE PLAN (W/O COVERAGE)
I5.0 IRRIGATION DETAILS
I5.1 IRRIGATION DETAILS

100% CONSTRUCTION DOCUMENTS

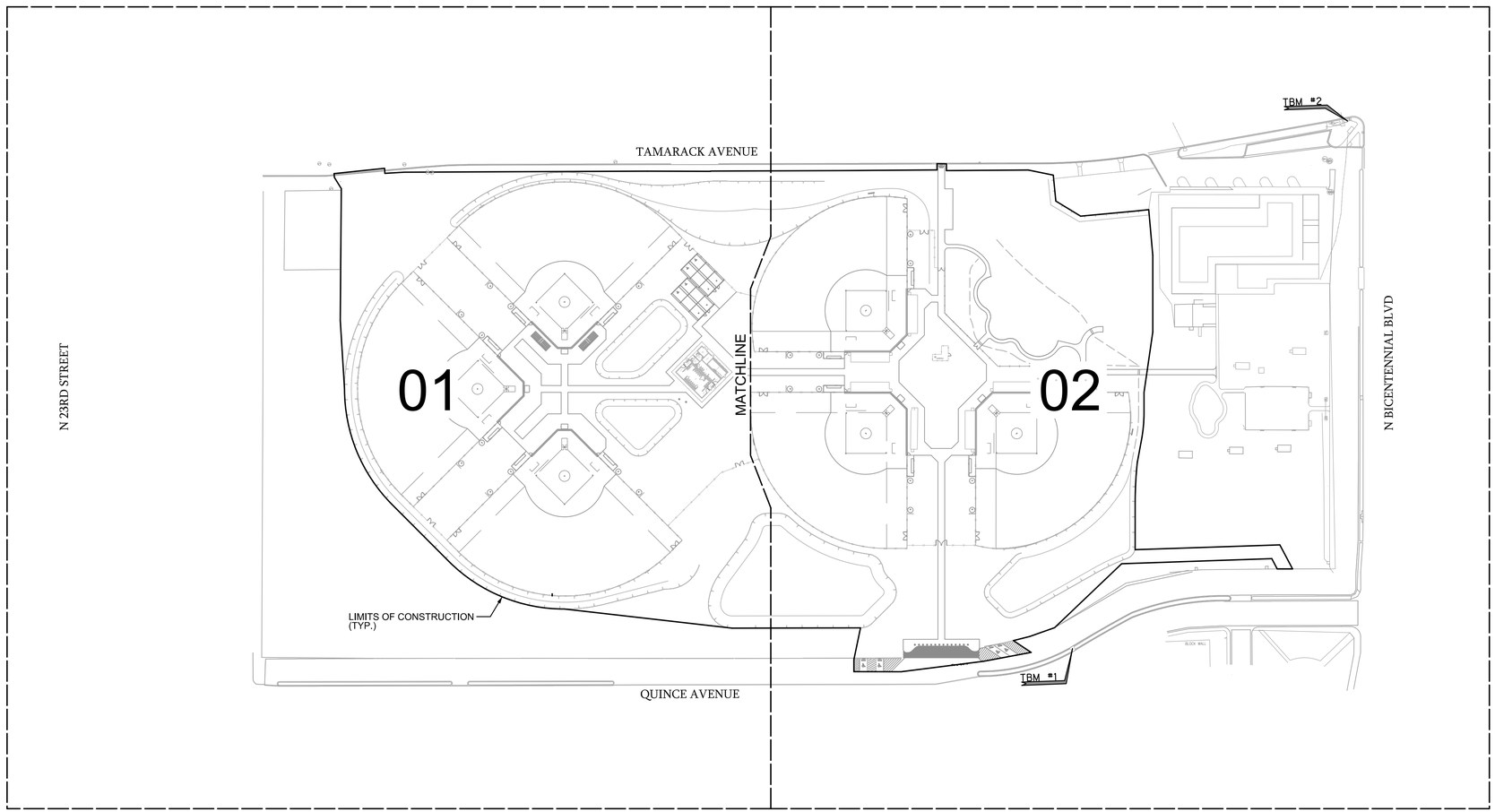

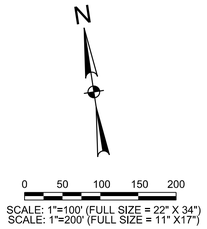

BENCHMARKS PROVIDED BY CITY OF McALLEN

TBM #1

SET ON CURB INLET WITHIN PARK'S PARKING LOT LIMITS , APPROXIMATELY 450' WEST OF THE INTERSECTION OF QUINCE ST. AND N. BICENTENNIAL BLVD.
ELEVATION= 115.16 (NAVD88)
N= 16605622.31
E= 1070065.94
(NAD83)

TBM #2

SET ON CURB INLET AT THE SOUTHWEST CORNER OF TAMARACK AVENUE AND N. BICENTENNIAL BLVD.
ELEVATION= 115.80 (NAVD88)
N= 16606328.72
E= 1070579.89
(NAD83)

CITY OF McALLEN
SOFTBALL FIELD FACILITIES
MUNICIPAL PARK
McALLEN, TEXAS

McALLEN Parks & Recreation

HALFF
5000 WEST MILITARY HWY. SUITE 100
McALLEN, TX 78503
TEL (956) 664-0286
FAX (956) 664-0282
TBPE FIRM #F-312

Revision		
No.	Date	Description
.	.	.
.	.	.
.	.	.
.	.	.
.	.	.
.	.	.
.	.	.

STATE OF TEXAS
ROBERT L. SAENZ
82072
REGISTERED PROFESSIONAL ENGINEER
7-11-2018

100% CONSTRUCTION DOCUMENTS

Project No.:	33348.001
Issued:	07/11/2018
Drawn By:	FC
Checked By:	RM
Scale:	AS NOTED

Sheet Title

KEY MAP

C0.01

Sheet Number

GENERAL CONSTRUCTION NOTES:

1) ALL IMPROVEMENTS TO BE IN ACCORDANCE WITH CITY OF McALLEN CODES.

2) CONTRACTOR TO VERIFY LOCATION AND ELEVATION OF EXISTING FACILITIES PRIOR TO CONSTRUCTION. ANY

3) CONTRACTOR TO PLAN AND PERFORM HIS WORK IN A MANNER THAT WILL PERMIT SAFE PUBLIC TRAFFIC MOVEMENT ON ALL STREETS.

4) TEMPORARY TRAFFIC CONTROL DURING CONSTRUCTION TO BE IN ACCORDANCE WITH SPECIFICATIONS AND AS REQUIRED BY THE CITY OF McALLEN (NO SEPARATE PAY).

5) CONTRACTOR SHALL PROVIDE PROTECTIVE DEVICES SUCH AS SIGNS, LIGHTS, AND SIGNALS FOR THE SAFETY OF THE PUBLIC AND WORKERS, AS REQUIRED. (NO SEPARATE PAY)

6) CONTRACTOR TO BE RESPONSIBLE FOR PROTECTION AND/OR SAFETY OF THE WORK SITE, WORKERS, SUBCONTRACTORS, MATERIALS AND/OR EQUIPMENT.

7) CONSTRUCTION STAKING SHALL BE PROVIDED BY THE CONTRACTOR AND AT CONTRACTOR'S EXPENSE. ALL DIMENSIONS ARE TO FACE OF CURBS UNLESS SHOWN OTHERWISE.

8) MATERIAL TESTING SHALL BE PROVIDED BY THE OWNER. RE-TEST TO BE AT CONTRACTOR'S EXPENSE.

9) CONTRACTOR SHALL SUBMIT A TRAFFIC CONTROL PLAN (IF REQUIRED), FOR APPROVAL BY THE CITY ENGINEERING OFFICE PRIOR TO CONSTRUCTION.

10) CONTRACTOR SHALL BE RESPONSIBLE FOR OBTAINING ALL PERMITS REQUIRED AND AT CONTRACTOR'S EXPENSE.

11) ANY DAMAGES TO EXISTING STRUCTURES SHALL BE REPAIRED TO PRE-CONSTRUCTION CONDITION OR BETTER AT THE CONTRACTORS EXPENSE. EXISTING STRUCTURES MAY INCLUDE BUT ARE NOT LIMITED TO ANY DAMAGE TO EXISTING PAVEMENT, DRAINAGE OR EXISTING STRUCTURES SHALL BE REPAIRED TO PRE-CONSTRUCTION CONDITION AT CONTRACTOR'S EXPENSE.

12) "THESE PLANS DO NOT EXTEND TO OR INCLUDE DESIGN OR SYSTEMS PERTAINING TO THE SAFETY OF THE CONSTRUCTION CONTRACTOR OR ITS EMPLOYEES, AGENTS OR REPRESENTATIVES IN THE PERFORMANCE OF THE WORK. THE SEAL OF HALFF ASSOCIATES, INC. REGISTERED PROFESSIONAL ENGINEER (S) HEREON DOES NOT EXTEND TO ANY SUCH SAFETY SYSTEMS THAT MAY NOW OR HEREAFTER BE INCORPORATED IN THESE PLANS. THE CONSTRUCTION CONTRACTOR SHALL PREPARE OR OBTAIN THE APPROPRIATE SAFETY SYSTEMS, INCLUDING THE PLANS AND SPECIFICATIONS REQUIRED BY THE HOUSE BILLS 662 AND 665 ENACTED BY THE TEXAS LEGISLATURE IN THE 70TH LEGISLATURE REGULAR SESSION."

13) CONTRACTOR SHALL GIVE NOTICE TO ALL AUTHORIZED INSPECTORS, SUPERINTENDENTS, OR PERSONS IN CHARGE OF PRIVATE AND PUBLIC UTILITIES AFFECTED BY HIS OPERATIONS PRIOR TO COMMENCEMENT OF WORK. NOTIFY TEXAS ONE CALL FOR UTILITY LOCATIONS PRIOR TO ANY & ALL EXCAVATIONS.

14) CONTRACTOR TO COORDINATE WITH THE CITY OF McALLEN ON WORK SCHEDULES, TESTING, GENERAL INSPECTION, AND EXISTING LINES.

15) CONTRACTOR TO EXERCISE CAUTION WHEN WORKING NEAR EXISTING FACILITIES AND/OR UTILITIES. ALL DAMAGE TO BE REPAIRED AT CONTRACTOR'S EXPENSE. ALL COSTS FOR INTERRUPTION OF GAS, ELECTRICAL, COMMUNICATIONS AND/OR WATER SERVICE DUE TO CONTRACTOR'S WORK SHALL BE BORNE BY THE CONTRACTOR.

16) INFORMATION ON EXISTING UTILITIES IS FROM BEST AVAILABLE INFORMATION OF RECORD AND SPOT FIELD LOCATIONS. CONTRACTOR IS RESPONSIBLE FOR FIELD VERIFICATION AND LOCATION OF THESE UNDERGROUND UTILITIES AS REQUIRED AT NO SEPARATE PAY.

17) ALL SPOIL MATERIAL AND DEBRIS SHALL BE DISPOSED OFFSITE BY CONTRACTOR IN A LEGAL MANNER. FURNISHING AND TRANSPORTATION OF ALL OFFSITE MATERIAL TO BE AT CONTRACTOR'S EXPENSE.

18) UPON COMPLETION OF CONSTRUCTION CONTRACTOR SHALL RETURN THE SITE TO ORIGINAL CONTOURS UNLESS DIFFERENT FINISHED ELEVATIONS ARE SHOWN ON PLANS. CONTRACTOR TO INSURE NO AREAS OF PONDING ARE PRESENT.

19) CONCRETE NOTES:
   A) ALL CONCRETE WORK TO BE FORMED, UNLESS OTHERWISE APPROVED.
   B) ALL CONCRETE TO BE 3000-PSI MINIMUM AT 28 DAYS, UNLESS OTHERWISE SHOWN. STRENGTH TO BE DETERMINED BY CYLINDER BREAK TEST.
   C) ALL REINFORCING STEEL TO BE ASTM A-615, GRADE 60, UNLESS OTHERWISE SHOWN.
   D) ALL EXPOSED CONCRETE WORK TO BE CHAMFERED.

20) CONTRACTOR TO INSURE SAME DAY ACCESS TO ALL RESIDENCES AND BUSINESSES ADJACENT TO CONSTRUCTION.

21) DEMOLITION, REMOVAL & DISPOSAL OF ALL EXCESS CONCRETE, CURBS, RUBBLE, ETC. TO BE DONE IN A LEGAL MANNER AT CONTRACTOR'S EXPENSE.

22) ALL TRAFFIC CONTROL / TRAFFIC SAFETY SHALL BE IN ACCORDANCE WITH THE MANUAL OF UNIFORM TRAFFIC CONTROL DEVICES (MUTCD) CRITERIA.

23) CONTRACTOR TO PROVIDE ALL NECESSARY PERMITS AS REQUIRED TO COMPLETE PROJECT AT THE CONTRACTOR'S EXPENSE.

PAVING CONSTRUCTION NOTES:

1) HOT MIX ASPHALT CONCRETE TO BE IN ACCORDANCE WITH TXDOT SPECIFICATION TYPE "D"

2) SUBGRADE EXCAVATION AND RECOMPACTION TO BE INCLUDED IN PRICE BID PER SQUARE YARD FOR "LIME TREATED SUBGRADE."

3) CONTRACTOR TO FILL BEHIND CURBS AND WALKS AND SHAPE TO ENSURE PROPER DRAINAGE.

4) CONTRACTOR SHALL " LAY DOWN" CURB SECTION AT DRIVEWAYS LOCATIONS SHOWN ON DRAWINGS. CONTRACTOR SHALL BE REQUIRED TO GRADE FROM EXISTING DRIVES AND PARKING AREAS TO MATCH GRADES AND ALLOW SMOOTH TRANSITIONS AND PROPER DRAINAGE. (NO SEPARATE PAY)

5) CONSTRUCTION JOINTS TO EXISTING PAVEMENT SHALL BE MADE BY EITHER CUTTING BACK EXISTING TO PRODUCE A SLIGHTLY BEVELED EDGE FOR THE FULL THICKNESS OF THE WEARING COURSE OR A SUITABLE LAP JOINT SHALL BE MADE. SAW CUTTING REQUIRED.

6) NO TRAFFIC SHALL BE ALLOWED ON THE FINISHED WEARING SURFACE UNTIL AT LEAST 12 HOURS AFTER COMPLETION OF ROLLING.

7) WHEN TYING INTO EXISTING CURB, EXPOSE REBAR AND FORM EXPANSION JOINT PER DETAIL.

8) ANY SETTLEMENT UNDER PAVEMENT DUE TO INADEQUATE COMPACTION OF UTILITY LINE BACKFILL SHALL BE CAUSE FOR RECOMPACTION OF TRENCH AND REPLACEMENT OF PAVEMENT SECTION AT CONTRACTOR'S EXPENSE.

9) HOT MIX ASPHALT CONCRETE TRANSPORT TRUCKS TO BE EQUIPPED WITH CANVAS COVERS TO BE UTILIZED DURING MATERIAL HAULING. MATERIAL DELIVERED TO SITE AT IMPROPER TEMPERATURE SHALL BE REJECTED. HOT MIX SHALL BE LAID AT A MINIMUM TEMPERATURE OF 225°F

STORM DRAINAGE LINE CONSTRUCTION NOTES:

1) CONTRACTOR TO PROVIDE POSITIVE OUTFLOW FOR DRAINAGE BASIN AT ALL TIMES. IN THE CASE OF A STORM EVENT, CAPACITY FOR STORM WATER RUNOFF SHALL BE PROVIDED ON SITE AS A TEMPORARY DETENTION FACILITY TO MINIMIZE ADJACENT LOCAL FLOODING.

2) CONTRACTOR SHALL PROVIDE A SEQUENCE OF WORK FOR STORM DRAINAGE TIE INS THAT PROVIDES POSITIVE OUTFLOW AT ALL TIMES.

3) CONTRACTOR TO FIELD VERIFY THE LOCATION OF EXISTING UTILITIES & FACILITIES PRIOR TO CONSTRUCTION.

4) ALL REINFORCED CONCRETE STORM PIPES SHALL BE CLASS III WITH RUBBER GASKET SEALED JOINTS, UNLESS OTHERWISE NOTED ON PLANS.

5) ALL HIGH DENSITY POLYETHYLENE (HDPE) STORM PIPES SHALL HAVE WATERTIGHT JOINTS.

WATERLINE CONSTRUCTION NOTES:

1) ALL WATER LINES TO BE C-900 CLASS 150 PVC UNLESS OTHERWISE NOTED.

2) DOUBLE CHECK VALVE WILL BE REQUIRED WHEN FILLING NEW WATERLINE FOR PRESSURE TESTING.

3) ALL WATER & WASTEWATER COLLECTION LINE CROSSING TO BE CONSTRUCTED IN ACCORDANCE WITH TCEQ REGULATION, CHAPTER 290 & 217.

4) CONTRACTOR TO FIELD LOCATE EXISTING METERS & PROPOSED SERVICE CONNECTION LOCATIONS PRIOR TO CONSTRUCTION OF MAIN.

5) CONTRACTOR TO VERIFY THE LOCATION OF ALL EXISTING LINES TO BE TIED IN TO NEW MAIN PRIOR TO SETTING LOCATION OF TIE-IN TEE & VALVE ON MAIN.

6) WATERLINE MAINS TO BE HYDROSTATICALLY & BACTERIOLOGICALLY TESTED PER CITY OF McALLEN REQUIREMENTS PRIOR TO TIE-INS. CITY OF McALLEN APPROVAL OF TESTING IS REQUIRED.

7) CONTRACTOR SHALL NOTIFY McALLEN PUBLIC UTILITY TO OPERATE ALL LIVE WATER MAIN VALVES NEEDED TO COMPLETE NEW WORK.

8) CONTRACTOR SHALL MAINTAIN AS MINIMUMS 10 FEET HORIZONTAL AND 2 FEET VERTICAL SEPARATION BETWEEN WATER LINES AND ANY OTHER SEWER.

9) NO WATER JETTING ALLOWED, MECHANICAL COMPACTION REQUIRED.

10) FIRE HYDRANTS SHALL BE PLACED 3.0 FEET BEHIND BACK OF CURB AND FLANGE SHALL BE 6 INCHES ABOVE GRADE.

11) CONTRACTOR SHALL MAINTAIN A MINIMUM OF 3.0 FEET OF COVER ON ALL WATER LINES.

12) FITTINGS TO BE USED ON DEFLECTIONS AS NEEDED.

13) CONTRACTOR IS RESPONSIBLE FOR INSTALLING VALVES, FITTINGS, AND ALL INCIDENTALS AS NEEDED FOR A COMPLETE IN PLACE SYSTEM AND SHALL BE SUBSIDIARY TO PIPE INSTALLATION.

14) CONTRACTOR IS RESPONSIBLE FOR INSTALLATION OF ANY PIPING, VAVLES, FITTINGS, ETC, AS NEEDED FOR ANY TEMPORARY WATER SERVICES.

WASTEWATER COLLECTION LINE CONSTRUCTION NOTES:

1) ALL PROPOSED SEWER LINES WILL BE SDR 26 PIPE MATERIAL (UNLESS OTHERWISE NOTED).

2) CONTRACTOR TO PROVIDE DEFLECTION TEST IN ACCORDANCE WITH TCEQ CHAPTER 217.57 (b). MANDRAL TO BE PULLED IN BOTH DIRECTIONS

3) CONTRACTOR TO PROVIDE LOW PRESSURE AIR TEST IN ACCORDANCE WITH TCEQ CHAPTER 217.57 (a), (1). 30 DAYS AFTER INSTALLATION. NO WATER TEST ALLOWED.

4) CONTRACTOR TO FIELD VERIFY THE LOCATION OF EXISTING UTILITIES & FACILITIES PRIOR TO CONSTRUCTION.

5) ALL CROSSING OF WASTEWATER COLLECTION LINES AND WATERLINES CONSTRUCTED IN ACCORDANCE WITH TCEQ REGULATIONS CHAPTER 290 AND 217.

6) CONTRACTOR TO PROVIDE LEAKAGE TEST FOR MANHOLE IN ACCORDANCE WITH TCEQ CHAPTER 217.58 (a), (b) OF THE STATE WASTEWATER CODE NO WATER TEST ALLOWED.

7) NO WATER JETTING ALLOWED, MECHANICAL COMPACTION REQUIRED.

8) ALL STRUCTURES TO BE ADJUSTED BY THE CONTRACTOR TO MEET FINAL GRADES, A MAXIMUM OF 2 FEET OF THROAT RINGS WILL BE ALLOWED.

UTILITY GENERAL NOTES:

1) CONTRACTOR TO CONTACT ALL UTILITY COMPANIES IN THE AREA FOR FIELD VERIFICATION OF EXISTING FACILITIES. UTILITY COMPANIES TO INCLUDE BUT NOT LIMITED TO THE FOLLOWING :

McALLEN PUBLIC UTILITY (MPU)	(956) 681-1600
CITY OF McALLEN PUBLIC WORKS	(956) 681-4000
TEXAS ONE CALL	(800) 344-8377
DIG TESS	(800) DIG-TESS
TEXAS GAS SERVICE	(800) 700-2443
AT&T TEXAS	(800) 288-2020
TIME WARNER CABLE	(800) 222-5355
AEP TEXAS	(800) 344-8377
CITY OF MCALLEN ENGINEERING DEPARTMENT	(956) 681-1150
CITY OF MCALLEN WATERLINE MAINTENANCE	(956) 681-1660
CITY OF MCALLEN WASTE WATER SYSTEMS	(956) 681-1750
CITY OF MCALLEN TRAFFIC OPS (CITY FIBER)	(956) 681-2700

2) CONTRACTOR TO EXPOSE ANY EXISTING UTILITY THAT MAY BE IN CONFLICT PRIOR TO START OF EXCAVATION.

3) ALL EXISTING UTILITIES SHOWN ARE FROM BEST INFORMATION AVAILABLE. NEITHER THE ENGINEER NOR THE CITY TAKE RESPONSIBILITY FOR ACCURACY OF LOCATION.

4) CONTRACTOR SHALL AT ALL TIMES ALLOW ACCESS TO EXISTING DRIVEWAY OR PROVIDE/MAINTAIN ALTERNATIVE ALL-WEATHER ROUTES.

5) ANY DAMAGES TO FENCES, WALKS, OR PRIVATE PROPERTY SHALL BE REPAIRED BY THE CONTRACTOR AT HIS EXPENSE.

6) ALL CONSTRUCTION MATERIALS TESTING WILL BE COORDINATED THROUGH THE OWNER.

7) WORK REQUIRED TO BE INSPECTED BY THE CITY SHALL OCCUR DURING REGULAR WORKING HOURS, MONDAY THROUGH FRIDAY. NO WORK TO OCCUR DURING CITY HOLIDAYS, NON-WORKING HOURS, MONDAY THROUGH FRIDAY, AND WEEKENDS UNLESS APPROVED BY THE CITY. INSPECTION OVERTIME COSTS TO BE PAID BY CONTRACTOR.

8) USE CLASS 'B' EMBEDMENT FOR UTILITY TRENCHES UNDER PAVEMENT.

9) IT SHALL BE THE CONTRACTOR'S RESPONSIBILITY TO REMOVE ALL EXCAVATED MATERIAL AND DEBRIS FROM THE SITE.

10) McALLEN PUBLIC UTILITY (MPU) NOTE- ALL EXISTING WATER MAINS AND FIRE HYDRANTS ARE TO REMAIN ACTIVE UNTIL PROPOSED WATER IMPROVEMENTS ARE COMPLETE AND READY FOR CONNECTION. NIGHT TIME CONNECTIONS WILL BE REQUIRED.

11) McALLEN PUBLIC UTILITY (MPU) NOTE- CONTRACTOR IS RESPONSIBLE FOR COORDINATING WITH MPU REGARDING REMOVAL OF EXISTING WATER METERS PRIOR TO COMMENCEMENT OF ANY REMOVED WORK.

12) McALLEN PUBLIC UTILITY (MPU) NOTE- EXISTING SEWER MAINS ARE TO REMAIN ACTIVE UNTIL PROPOSED SECTIONS ARE COMPLETE AND READY FOR CONNECTION.

13) CONTRACTOR IS RESPONSIBLE FOR ALL MPU FEES AS REQUIRED INCLUDING BUT NOT LIMITED TO TAPPING AND METER FEES.

BENCHMARK AND TOPOGRAPHY NOTES:

TEMPORARY BENCHMARKS (TBM) AND TOPOGRAPHIC SURVEY INFORMATION WAS PROVIDED BY THE CITY OF MCALLEN UNDER SEPERATE CONTRACT:

1) TBM #1: SET ON CURB INLET WITHIN PARK'S PARKING LOT LIMITS, APPROXIMATELY 450' WEST OF THE INTERSECTION OF QUINCE ST. AND N. BICENTENNIAL BLVD.
ELEVATION= 115.16 (NAVD88)
N= 16605622.31
E= 1070065.94
(NAD83)

1) TBM #2: SET ON CURB INLET AT THE SOUTHWEST CORNER OF TAMARACK AVENUE AND N. BICENTENNIAL BLVD.
ELEVATION= 115.80 (NAVD88)
N= 16606328.72
E= 1070579.89
(NAD83)

BENCHMARKS PROVIDED BY CITY OF McALLEN
TBM #1
SET ON CURB INLET WITHIN PARK'S PARKING LOT LIMITS , APPROXIMATELY 450' WEST OF THE INTERSECTION OF QUINCE ST. AND N. BICENTENNIAL BLVD. ELEVATION= 115.16 (NAVD88) N= 16605622.31 E= 1070065.94 (NAD83)
TBM #2
SET ON CURB INLET AT THE SOUTHWEST CORNER OF TAMARACK AVENUE AND N. BICENTENNIAL BLVD. ELEVATION= 115.80 (NAVD88) N= 16606328.72 E= 1070579.89 (NAD83)

CITY OF McALLEN
SOFTBALL FIELD FACILITIES
MUNICIPAL PARK
McALLEN, TEXAS

McALLEN Parks & Recreation

HALFF
5000 WEST MILITARY HWY, SUITE 100
McALLEN, TX 78503
TEL (956) 664-0286
FAX (956) 664-0282
TBPE FIRM #F-312

Revision		
No.	Date	Description

STATE OF TEXAS
ROBERT L. SAENZ
82072
REGISTERED PROFESSIONAL ENGINEER
7-11-2018

100% CONSTRUCTION DOCUMENTS

Project No.:	33348.001
Issued:	07/11/2018
Drawn By:	FC
Checked By:	RM
Scale:	AS NOTED

Sheet Title
GENERAL NOTES

C0.02
Sheet Number

FOR INFORMATIONAL PURPOSES ONLY (BY OTHERS)

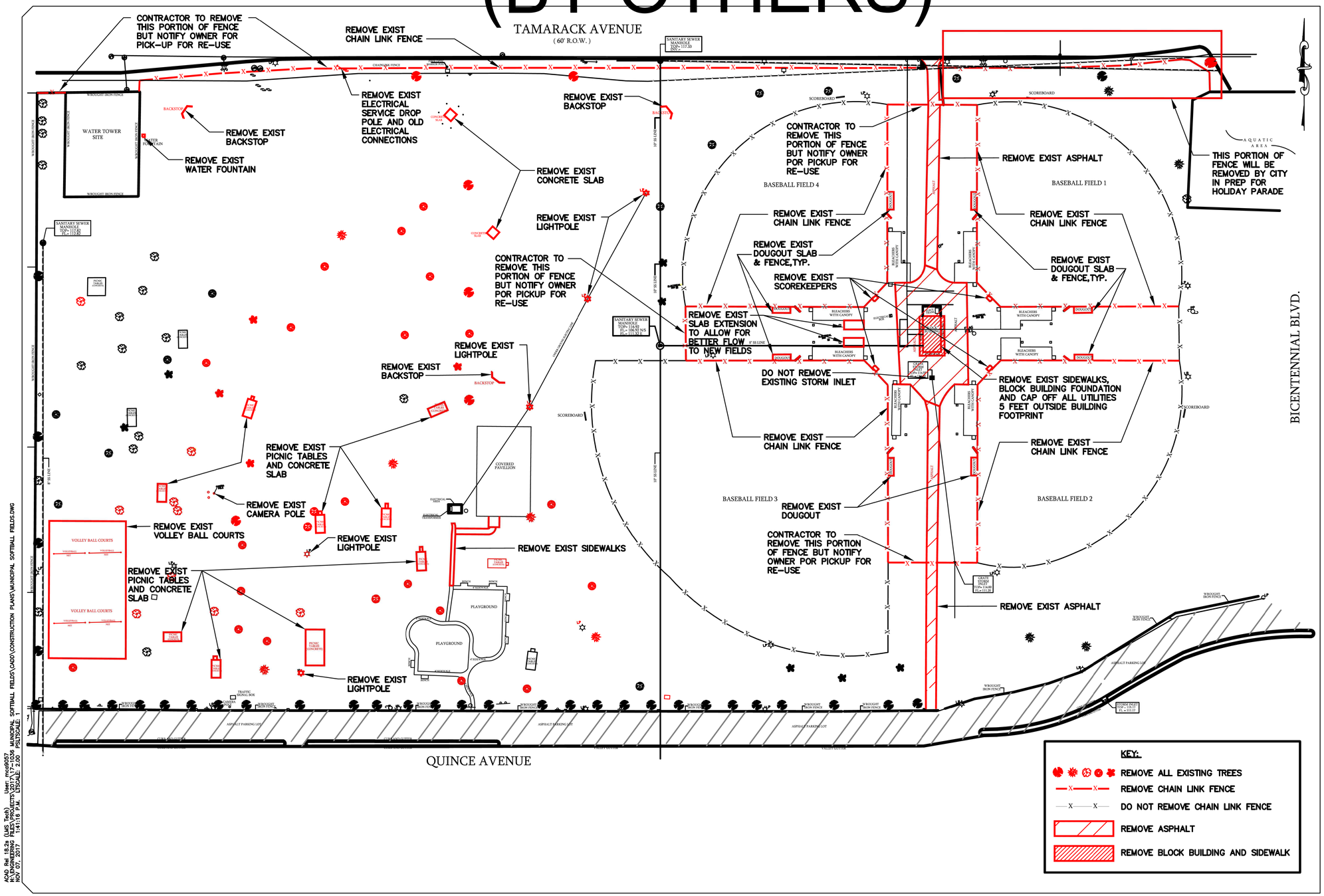

FILE NAME:	
DATE:	
SURVEYED BY:	
DESIGNED BY:	
DRAWN BY:	
CHECKED BY:	
PROJECT NO:	

TITLE: MUNICIPAL SOFTBALL FIELDS DEMOLITION PLAN

CITY OF McALLEN

CITY OF McALLEN ENGINEERING DEPARTMENT

SCALE: HOR: 1/8"=1' VERT: 1/8"=1'

REVISIONS:

SEAL:

DATE:

SHEET NO.: D-1

CITY OF McALLEN
SOFTBALL FIELD FACILITIES
MUNICIPAL PARK
McALLEN, TEXAS

McALLEN Parks & Recreation

HALFF
5000 WEST MILITARY HWY. SUITE 100
McALLEN, TX 78503
TEL (956) 682-0286
FAX (956) 664-0282
TBPE FIRM #F-312

Revision No.	Date	Description

Project No.:	33348.001
Issued:	07/11/2018
Drawn By:	FC
Checked By:	RM
Scale:	AS NOTED
Sheet Title	DEMOLITION PLAN (FOR INFORMATION ONLY)

C0.03
Sheet Number

AREA OF DEMOLITION

NOTES:

1. ALL MATERIAL CALLED OUT TO BE REMOVED BY THE CONTRACTOR SHALL BE DISPOSED IN A LEGAL MANNER AT THE CONTRACTOR'S EXPENSE.
2. PAVEMENT REMOVAL IS INCLUDING, BUT NOT LIMITED TO, ASPHALT PAVEMENT , BASE MATERIAL, SUBGRADE, CURB & GUTTER, WHEEL STOPS AND CONCRETE SIDEWALK AS REQUIRED.
3. POLES AND BASES TO BE REMOVED. SIGNS TO BE SALVAGED AND REUSED.
4. DURING CONSTRUCTION THE CONTRACTOR MAY ENCOUNTER BURIED CONCRETE FOUNDATIONS WITH REBAR. THE CONTRACTOR WILL BE RESPONSIBLE FOR REMOVAL AND DISPOSAL OF SAID FOUNDATIONS TO A DEPTH OF FIVE (5) FEET. BIDDERS SHALL PROVIDE A UNIT COST (PER TON) FOR THIS ITEM. THE OWNER WILL REQUIRE THE CONTRACTOR TO PROVIDE CERTIFIED WEIGHT TICKETS FOR PAYMENT OF THIS ITEM.
5. COORDINATE WITH LANDSCAPE PLANS FOR ADDITIONAL TREES THAT MAY NEED REMOVAL
6. COORDINATE WITH IRRIGATION PLANS FOR ADDITIONAL IRRIGATION INFORMATION.

LEGEND

WATER VALVE	SIGN	DRAINAGE MANHOLE
FRESNO TREE	WATER VALVE MARKER	LAMP POST
MESQUITE TREE	TELEPHONE MARKER	JUNCTION BOX
ALAMO TREE	FIRE HYDRANT	GAS METER
EBONY TREE		
PALM TREE	CONTROL VALVE	WATER LINE
DOWN GUY	TRAFFIC SIGN	GAS LINE
LIGHT POLE	POWER POLE	SAN. SEW. LINE
ELECTRICAL BOX	TRAFFIC SIGNAL BOX	DRAINAGE LINE
WATER METER	FIELD DRAIN/GRATED INLET	TELEPHONE LINE
SPRINKLER	TV CABLE BOX	IRRIGATION LINE
MANHOLE DRAIN	TRANSFORMER	FENCE LINE
INLET	SANITARY SEWER MANHOLE	WROUGH IRON FENCE

N

0 25 50 75 100

SCALE: 1"=50' (22 X 34)
SCALE 1"=100' (11 X 17)

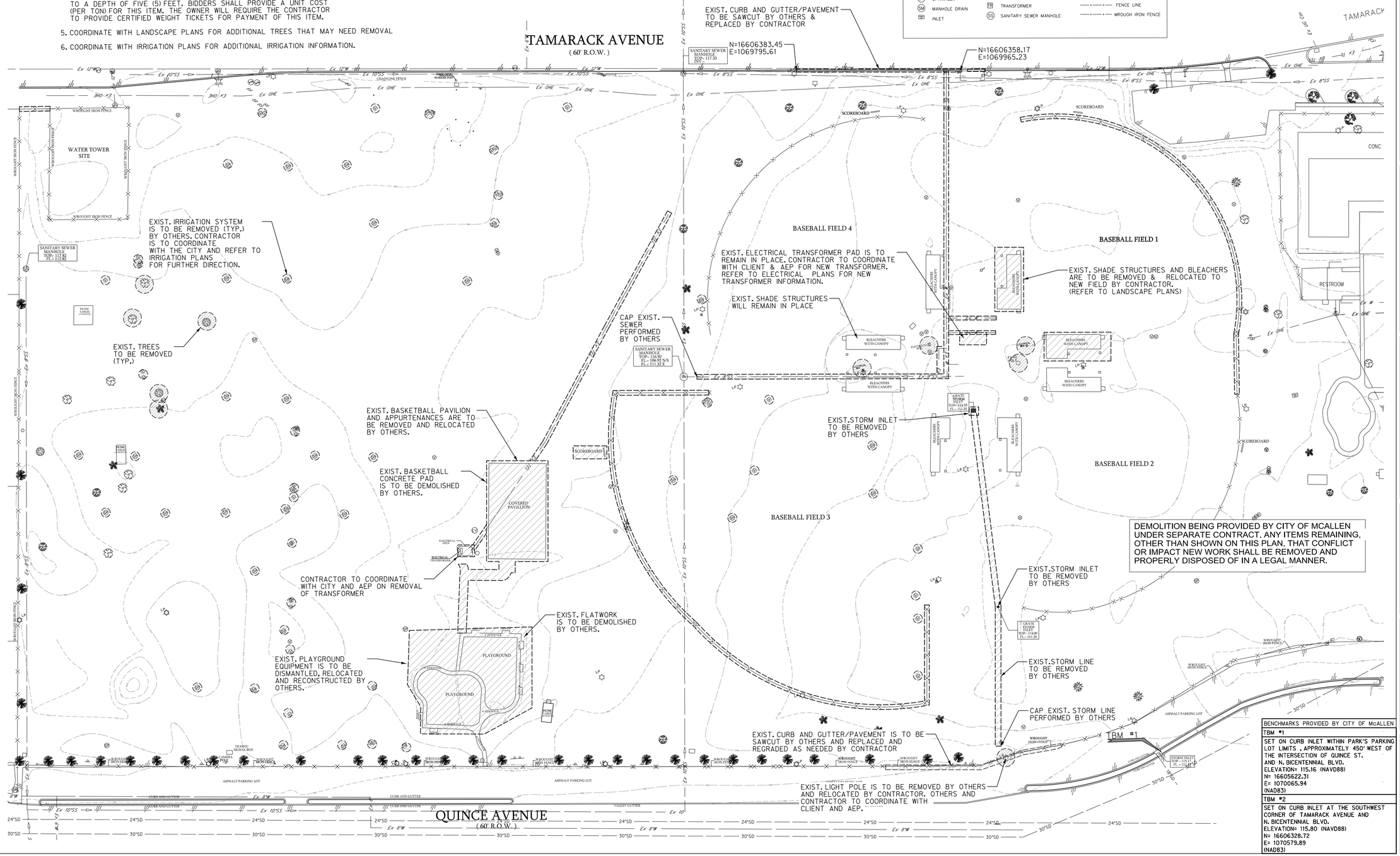

BENCHMARKS PROVIDED BY CITY OF McALLEN

TBM #1
SET ON CURB INLET WITHIN PARK'S PARKING LOT LIMITS , APPROXIMATELY 450' WEST OF THE INTERSECTION OF QUINCE ST. AND N. BICENTENNIAL BLVD.
ELEVATION= 115.16 (NAVD88)
N= 16605622.31
E= 1070065.94
(NAD83)

TBM #2
SET ON CURB INLET AT THE SOUTHWEST CORNER OF TAMARACK AVENUE AND N. BICENTENNIAL BLVD.
ELEVATION= 115.80 (NAVD88)
N= 16606328.72
E= 1070579.89
(NAD83)

CITY OF McALLEN
SOFTBALL FIELD FACILITIES
MUNICIPAL PARK
McALLEN, TEXAS

McALLEN Parks & Recreation

HALFF
5000 WEST MILITARY HWY. SUITE 100
McALLEN, TX 78503
TEL (956) 682-0286
FAX (956) 664-0282
TBPE FIRM #F-312

Revision	
No.	Date	Description

STATE OF TEXAS
ROBERT L. SAENZ
82072
REGISTERED PROFESSIONAL ENGINEER
7-11-2018

100% CONSTRUCTION DOCUMENTS

Project No.:	33348.001
Issued:	07/11/2018
Drawn By:	FC
Checked By:	RM
Scale:	AS NOTED

Sheet Title

DEMOLITION PLAN (FOR INFORMATION ONLY)

C0.04

Sheet Number

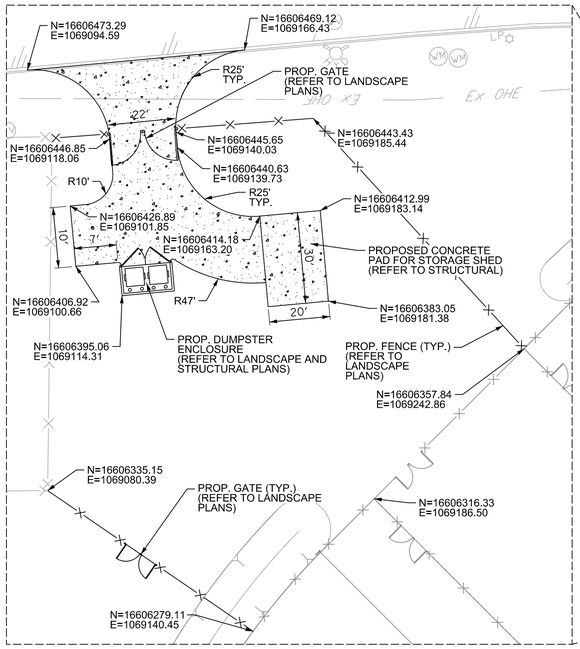

ALTERNATE #1

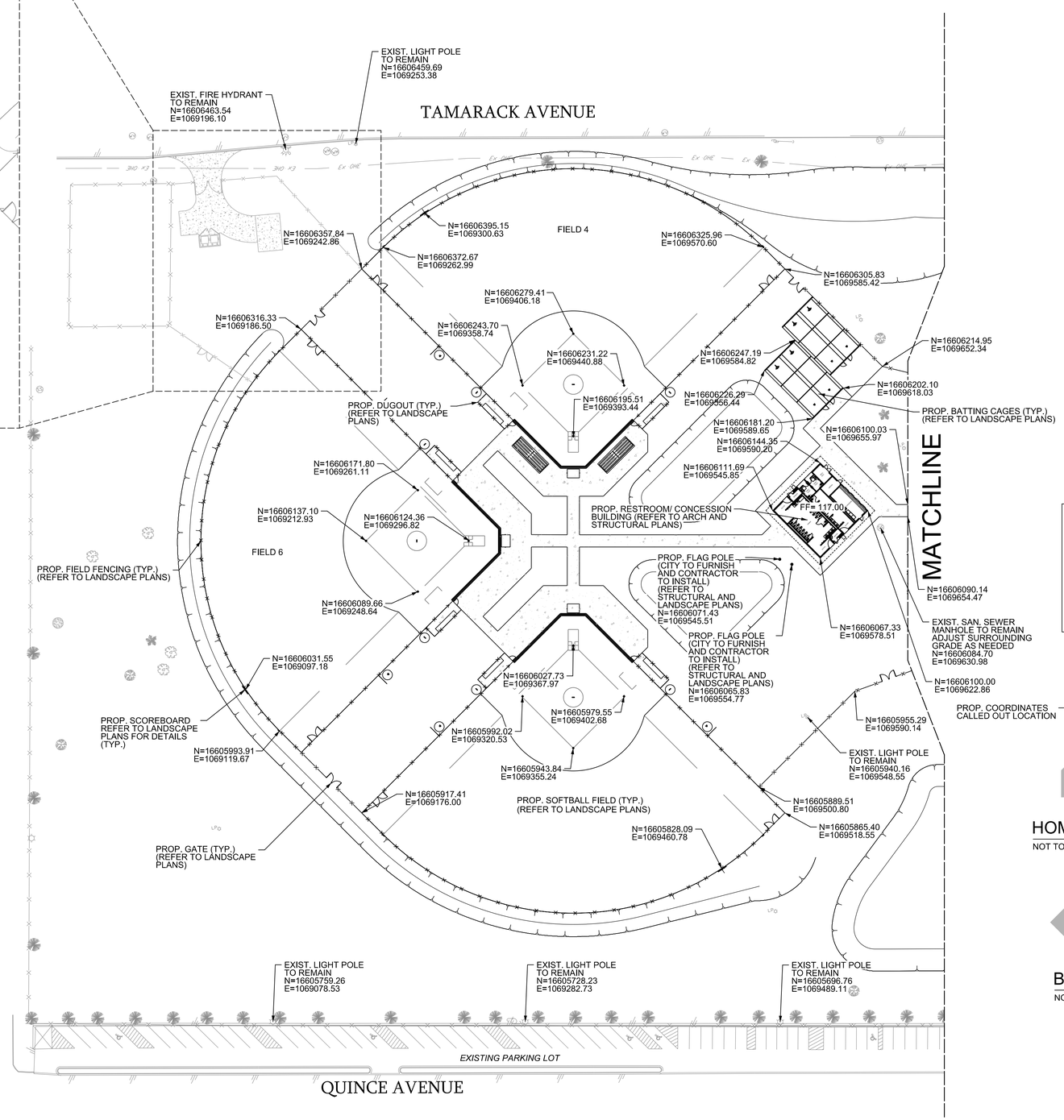

N

0 25 50 75 100

SCALE: 1"=50' (22 X 34)
SCALE 1"=100' (11 X 17)

LEGEND

PROPOSED	EXISTING	
	CI	INLET
	GI	GRATE INLET
	MH	MANHOLE
	WV	GATE VALVE & BOX
	WM	WATER METER
	FH	FIRE HYDRANT
	EX 6"SS	SAN. SEWER
W	EX 6"W	WATER
FIRE	Ex FIRE	FIRE PROTECTION
	36"SD	STORM SEWER
		ASPHALT PAVEMENT
		CONCRETE
		CAUTION UTILITY CROSSING

NOTES:
1. FOR INTERNAL PLAZA AND SOFTBALL FIELDS PAVING & DIMENSIONAL CONTROL REFER TO LANDSCAPE PLANS.
2. MUSCO LIGHTING LOCATION ARE TO BE IDENTIFIED BY OTHERS. CONTRACTOR TO COORDIANTE WITH CLIENT AND MUSCO.
3. CONTRACTOR TO COORDINATE WITH CITY AND AEP ON THE LIGHTPOLE RELOCATION AT PRIMARY ENTRANCE. REFER TO ELECTRICAL PLANS.

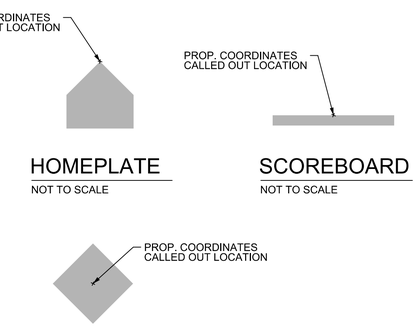

HOMEPLATE
NOT TO SCALE

SCOREBOARD
NOT TO SCALE

BASES
NOT TO SCALE

BENCHMARKS PROVIDED BY CITY OF McALLEN
TBM #1
SET ON CURB INLET WITHIN PARK'S PARKING LOT LIMITS , APPROXIMATELY 450' WEST OF THE INTERSECTION OF QUINCE ST. AND N. BICENTENNIAL BLVD. ELEVATION= 115.16 (NAVD88) N= 16605622.31 E= 1070065.94 (NAD83)
TBM #2
SET ON CURB INLET AT THE SOUTHWEST CORNER OF TAMARACK AVENUE AND N. BICENTENNIAL BLVD. ELEVATION= 115.80 (NAVD88) N= 16606328.72 E= 1070579.89 (NAD83)

CITY OF McALLEN
SOFTBALL FIELD FACILITIES
MUNICIPAL PARK
McALLEN, TEXAS

McALLEN Parks & Recreation

HALFF
5000 WEST MILITARY HWY. SUITE 100
McALLEN, TX 78503
TEL (956) 682-0286
FAX (956) 664-0282
TBPE FIRM #F-312

Revision	
No.	Date	Description

STATE OF TEXAS
ROBERT L. SAENZ
82072
REGISTERED PROFESSIONAL ENGINEER
7.11.2018

100% CONSTRUCTION DOCUMENTS

Project No.:	33348.001
Issued:	07/11/2018
Drawn By:	FC
Checked By:	RM
Scale:	AS NOTED

Sheet Title
PAVING & DIMENSION CONTROL PLAN

C1.01
Sheet Number

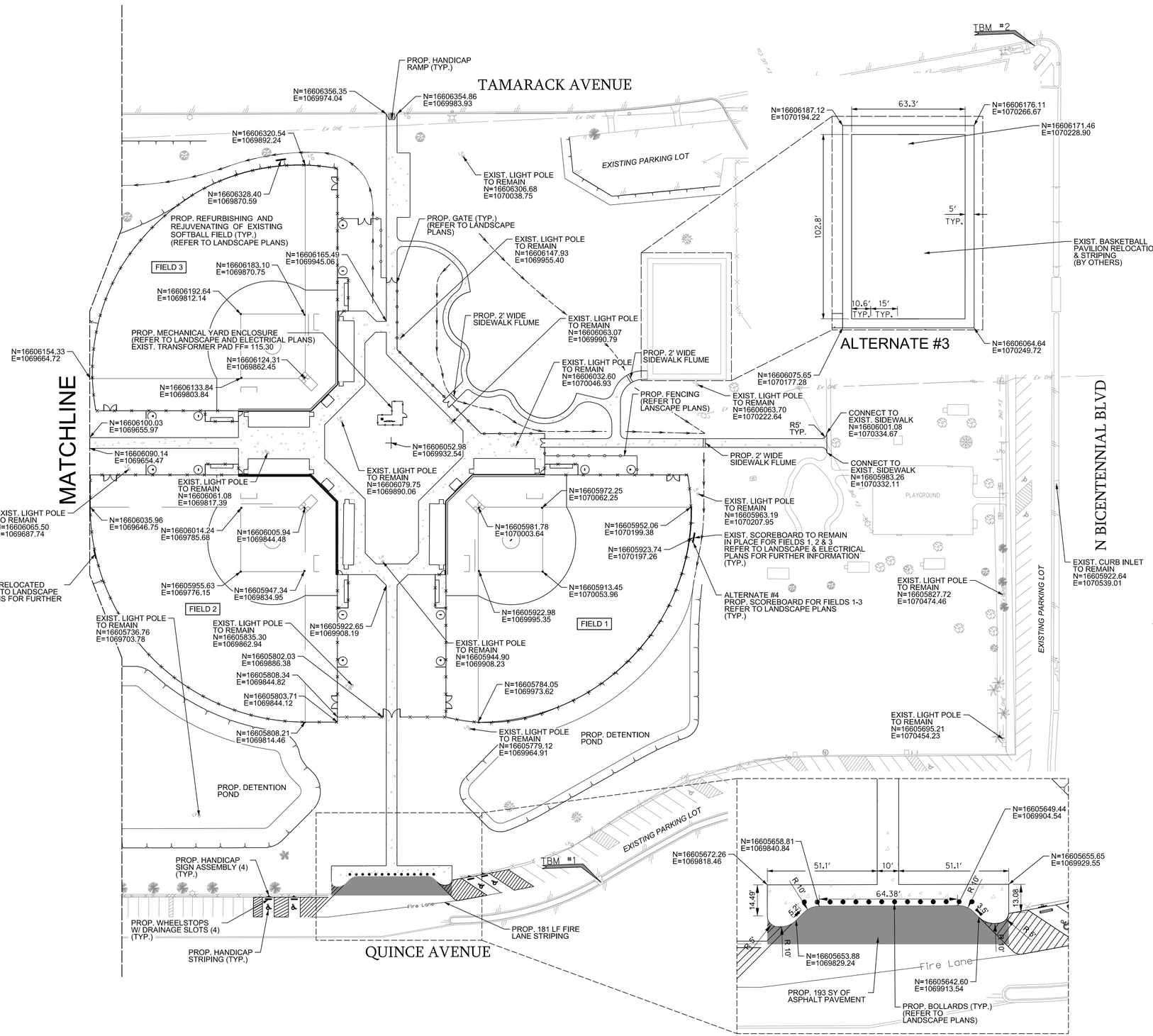

N

0 25 50 75 100

SCALE: 1"=50' (22 X 34)
SCALE 1"=100' (11 X 17)

LEGEND

PROPOSED	EXISTING	
	CI	INLET
	GI	GRATE INLET
	MH	MANHOLE
	WV	GATE VALVE & BOX
	WM	WATER METER
	FH	FIRE HYDRANT
	EX 6"SS	SAN. SEWER
W	EX 6"W	WATER
FIRE	Ex FIRE	FIRE PROTECTION
	36"SD	STORM SEWER
		ASPHALT PAVEMENT
		CONCRETE
		CAUTION UTILITY CROSSING

NOTES:
1. FOR INTERNAL PLAZA AND SOFTBALL FIELDS PAVING & DIMENSIONAL CONTROL REFER TO LANDSCAPE PLANS.
2. MUSCO LIGHTING LOCATION ARE TO BE IDENTIFIED BY OTHERS. CONTRACTOR TO COORDIANTE WITH THE CITY AND MUSCO.
3. CONTRACTOR TO COORDINATE WITH CITY AND AEP ON THE LIGHTPOLE RELOCATION AT PRIMARY ENTRANCE. REFER TO ELECTRICAL PLANS.
4. ALTERNATE #3. PROP. BASKETBALL GOAL, RIM, POST, AND BACKBOARD TO BE FURNISHED BY THE CITY AND INSTALLED BY THE CITY. CONTRACTOR IS TO ONLY POUR CONCRETE PAD

PROP. COORDINATES CALLED OUT LOCATION

HOMEPLATE

NOT TO SCALE

FURNISHED AND INSTALLED BY OTHERS

PROP. COORDINATES CALLED OUT LOCATION

SCOREBOARD

NOT TO SCALE

PROP. COORDINATES CALLED OUT LOCATION

BASES

NOT TO SCALE

FURNISHED AND INSTALLED BY OTHERS

BENCHMARKS PROVIDED BY CITY OF McALLEN
TBM #1 SET ON CURB INLET WITHIN PARK'S PARKING LOT LIMITS , APPROXIMATELY 450' WEST OF THE INTERSECTION OF QUINCE ST. AND N. BICENTENNIAL BLVD. ELEVATION= 115.16 (NAVD88) N= 16605622.31 E= 1070065.94 (NAD83)
TBM #2 SET ON CURB INLET AT THE SOUTHWEST CORNER OF TAMARACK AVENUE AND N. BICENTENNIAL BLVD. ELEVATION= 115.80 (NAVD88) N= 16606328.72 E= 1070579.89 (NAD83)

CITY OF McALLEN
SOFTBALL FIELD FACILITIES
MUNICIPAL PARK
McALLEN, TEXAS

McALLEN Parks & Recreation

HALFF
5000 WEST MILITARY HWY. SUITE 100
McALLEN TX 78503
TEL (956) 682-0285
FAX (956) 664-0282
TBPE FIRM #F-312

Revision		
No.	Date	Description

STATE OF TEXAS
ROBERT L. SAENZ
82072
REGISTERED PROFESSIONAL ENGINEER
7-11-2018

100% CONSTRUCTION DOCUMENTS

Project No.:	33348.001
Issued:	07/11/2018
Drawn By:	FC
Checked By:	RM
Scale:	AS NOTED

Sheet Title

PAVING & DIMENSION CONTROL PLAN

C1.02

Sheet Number

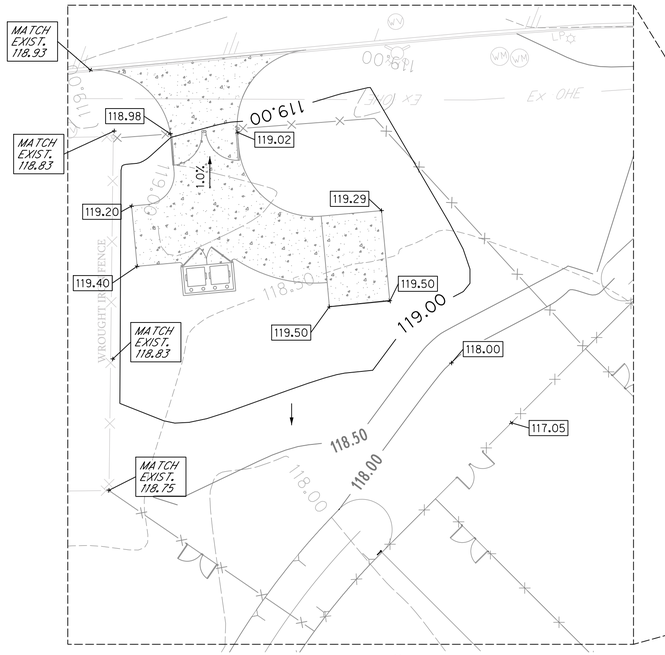

ALTERNATE #1

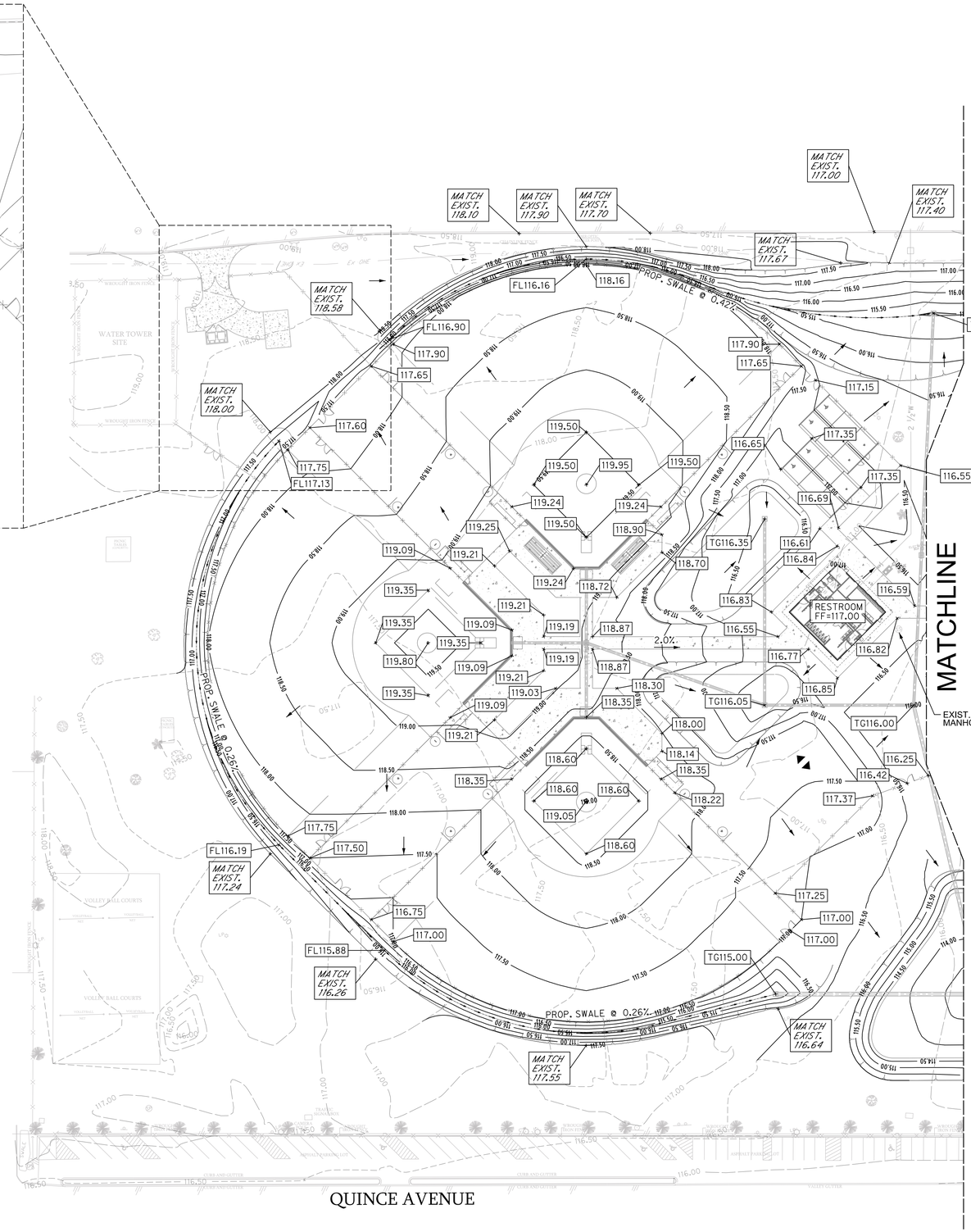

MATCHLINE

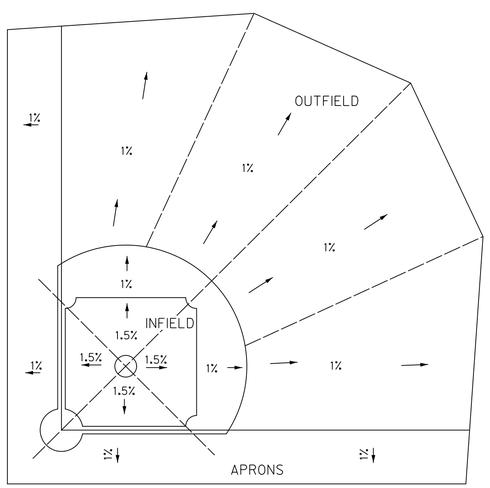

TYPICAL BASEBALL AND SOFTBALL FIELD GRADES
SCALE: NTS

N

0 25 50 75 100
SCALE: 1"=50' (22 X 34)
SCALE 1"=100' (11 X 17)

LEGEND

PROPOSED	EXISTING	
—100.00—	- -100.00- -	CONTOUR
→		DRAINAGE FLOW ARROW
+ FL100.00		FLOW LINE
+ TG100.00		TOP OF GRATE
+ 100.00		FINISHED GRADE

EARTHWORK QUANTITIES

TOTAL CUT = 5,536 CY
TOTAL FILL = 7,807 CY
BALANCE = -2,271 CY

NOTES:
1. EARTHWORK QUANTITIES WERE CALCULATED FROM EXISTING GRADE TO PROPOSED GRADES, WITH THE ASSUMPTION THAT ALL EXISTING DIRTWORK WILL BE UTILIZED AS FILL MATERIAL. CONTRACTOR TO COORDINATE WITH THE CITY FOR DIRTWORK TREATMENT.

2. ALL QUANITITIES ARE IN PLACE AND NO SHRINKAGE OR SWELLING WAS TAKEN INTO ACCOUNT.

3. EARTHWORK QUANTITIES WERE CALCULATED FROM EXISTING GRADE TO PROPOSED GRADES, 4" OF TOPSOIL AT FIELDS AND 2" OF TOPSOIL AT DISTURBED AREA INCLUDED.

4. ALL PROP. SIDEWALK CROSS SLOPES SHALL NOT EXCEED 2%.

5. ALL PROP. SIDEWALK RUNNING SLOPES SHALL NOT EXCEED 5%.

6. ALL PROP. CURB RAMP SIDE SLOPES SHALL NOT EXCEED 2%.

7. ALL PROP. SIDEWALK RUNNING SLOPES SHALL NOT EXCEED 8.33%.

GEOTECH REPORT BY:
TERRACON CONSULTANTS, INC.
PROJECT NO. 88175150
DATE: SEPTEMBER 18, 2017

BENCHMARKS PROVIDED BY CITY OF McALLEN

TBM #1
SET ON CURB INLET WITHIN PARK'S PARKING LOT LIMITS , APPROXIMATELY 450' WEST OF THE INTERSECTION OF QUINCE ST. AND N. BICENTENNIAL BLVD.
ELEVATION= 115.16 (NAVD88)
N= 16605622.31
E= 1070065.94
(NAD83)

TBM #2
SET ON CURB INLET AT THE SOUTHWEST CORNER OF TAMARACK AVENUE AND N. BICENTENNIAL BLVD.
ELEVATION= 115.80 (NAVD88)
N= 16606328.72
E= 1070579.89
(NAD83)

CITY OF McALLEN
SOFTBALL FIELD FACILITIES
MUNICIPAL PARK
McALLEN, TEXAS

McALLEN Parks & Recreation

HALFF
5000 WEST MILITARY HWY. SUITE 100
McALLEN, TX 78503
TEL (956) 682-0286
FAX (956) 664-0282
TBPE FIRM #F-312

Revision	
No.	Date	Description

STATE OF TEXAS
ROBERT L. SAENZ
82072
REGISTERED PROFESSIONAL ENGINEER
7.11.2018

100% CONSTRUCTION DOCUMENTS

Project No.:	33348.001
Issued:	07/11/2018
Drawn By:	FC
Checked By:	RM
Scale:	AS NOTED

Sheet Title
GRADING PLAN

C2.01
Sheet Number

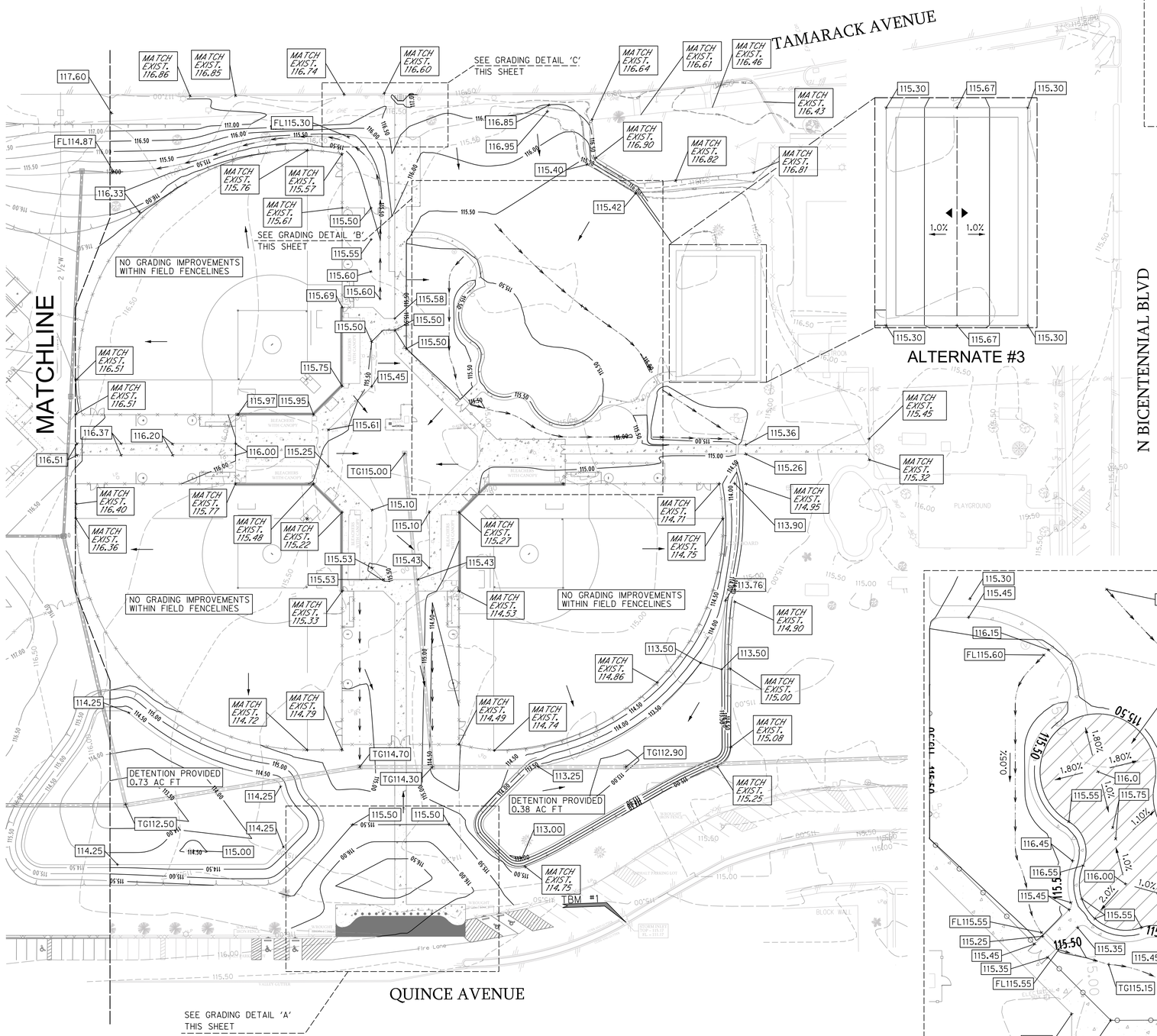

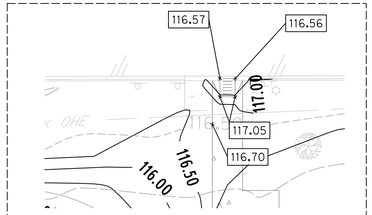

GRADING DETAIL 'C'
SCALE: NTS

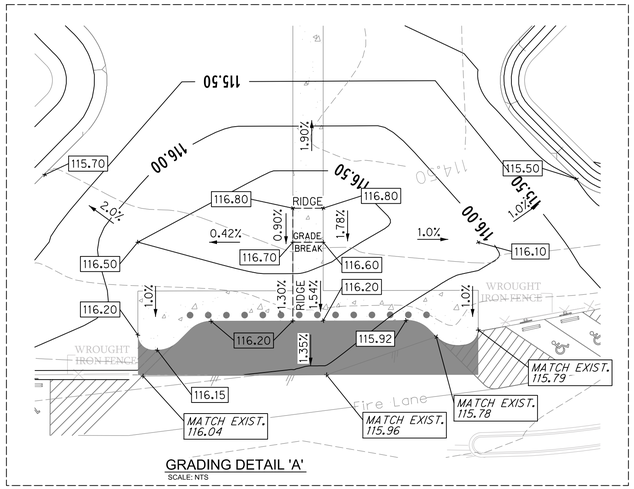

GRADING DETAIL 'A'
SCALE: NTS

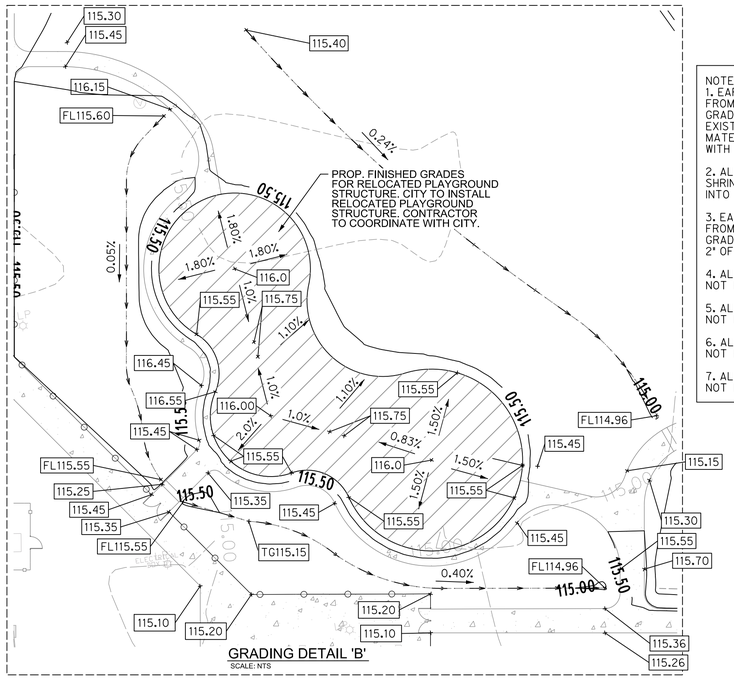

GRADING DETAIL 'B'
SCALE: NTS

N

0 25 50 75 100

SCALE: 1"=50' (22 X 34)
SCALE 1"=100' (11 X 17)

LEGEND

PROPOSED	EXISTING	
—100.00—	- -100.00- -	CONTOUR
→		DRAINAGE FLOW ARROW
+ FL100.00		FLOW LINE
+ TG100.00		TOP OF GRATE
+ 100.00		FINISHED GRADE

EARTHWORK QUANTITIES

TOTAL CUT = 5,536 CY
TOTAL FILL = 7,807 CY
BALANCE = -2,271 CY

NOTES:

1. EARTHWORK QUANTITIES WERE CALCULATED FROM EXISTING GRADE TO PROPOSED GRADES, WITH THE ASSUMPTION THAT ALL EXISTING DIRTWORK WILL BE UTILIZED AS FILL MATERIAL. CONTRACTOR TO COORDINATE WITH THE CITY FOR DIRTWORK TREATMENT.
2. ALL QUANITITIES ARE IN PLACE AND NO SHRINKAGE OR SWELLING WAS TAKEN INTO ACCOUNT.
3. EARTHWORK QUANTITIES WERE CALCULATED FROM EXISTING GRADE TO PROPOSED GRADES, 4" OF TOPSOIL AT FIELDS AND 2" OF TOPSOIL AT DISTURBED AREA INCLUDED.
4. ALL PROP. SIDEWALK CROSS SLOPES SHALL NOT EXCEED 2%.
5. ALL PROP. SIDEWALK RUNNING SLOPES SHALL NOT EXCEED 5%.
6. ALL PROP. CURB RAMP SIDE SLOPES SHALL NOT EXCEED 2%.
7. ALL PROP. SIDEWALK RUNNING SLOPES SHALL NOT EXCEED 8.33%.

GEOTECH REPORT BY:
TERRACON CONSULTANTS, INC.
PROJECT NO. 88175150
DATE: SEPTEMBER 18, 2017

BENCHMARKS PROVIDED BY CITY OF McALLEN

TBM #1
SET ON CURB INLET WITHIN PARK'S PARKING LOT LIMITS , APPROXIMATELY 450' WEST OF THE INTERSECTION OF QUINCE ST. AND N. BICENTENNIAL BLVD.
ELEVATION= 115.16 (NAVD88)
N= 16605622.31
E= 1070065.94
(NAD83)

TBM #2
SET ON CURB INLET AT THE SOUTHWEST CORNER OF TAMARACK AVENUE AND N. BICENTENNIAL BLVD.
ELEVATION= 115.80 (NAVD88)
N= 16606328.72
E= 1070579.89
(NAD83)

CITY OF McALLEN
SOFTBALL FIELD FACILITIES
MUNICIPAL PARK
McALLEN, TEXAS

McALLEN Parks & Recreation

HALFF
5000 WEST MILITARY HWY, SUITE 100
McALLEN, TX 78503
TEL (956) 664-0088
FAX (956) 664-0282
TBPE FIRM #F-312

Revision	
No.	Date	Description

STATE OF TEXAS
ROBERT L. SAENZ
82072
REGISTERED PROFESSIONAL ENGINEER
7.11.2018

100% CONSTRUCTION DOCUMENTS

Project No.:	33348.001
Issued:	07/11/2018
Drawn By:	FC
Checked By:	RM
Scale:	AS NOTED

Sheet Title
GRADING PLAN

C2.02
Sheet Number

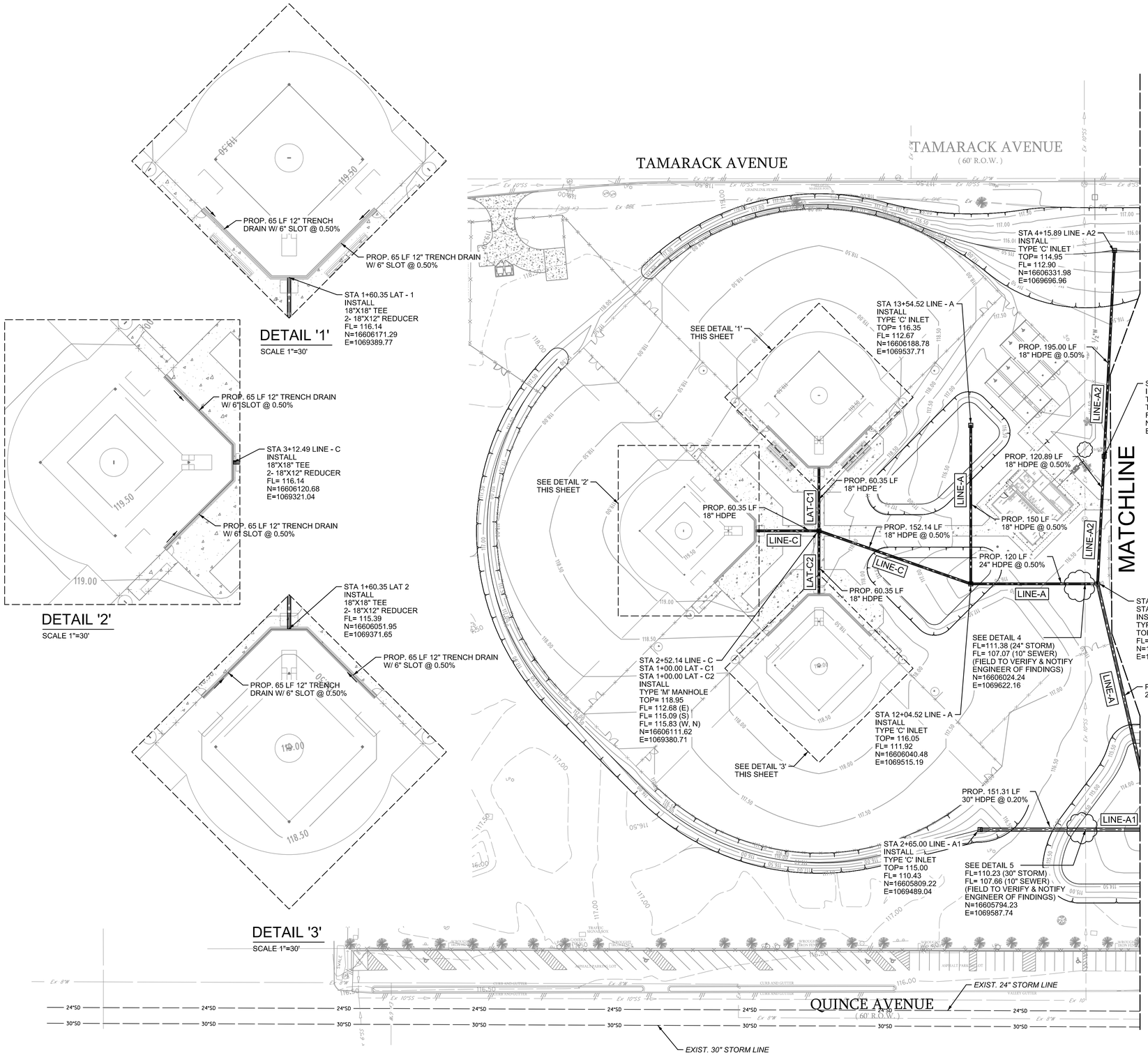

N

0 25 50 75 100

SCALE: 1"=50' (22 X 34)
SCALE 1"=100' (11 X 17)

LEGEND

PROPOSED	EXISTING	
	CI	INLET
	GI	GRATE INLET
	MH	MANHOLE
	WV	GATE VALVE & BOX
	WM	WATER METER
	FH	FIRE HYDRANT
	EX 6"SS	SAN. SEWER
W	EX 6"W	WATER
FIRE	Ex FIRE	FIRE PROTECTION
	36"SD	STORM SEWER
		ASPHALT PAVEMENT
		CONCRETE
		CAUTION UTILITY CROSSING

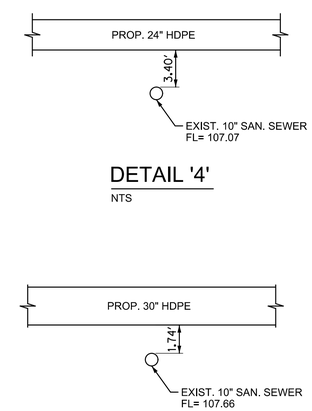

CITY OF McALLEN
SOFTBALL FIELD FACILITIES
MUNICIPAL PARK
McALLEN, TEXAS

McALLEN Parks & Recreation

HALFF
5000 WEST MILITARY HWY. SUITE 100
McALLEN, TX 78503
TEL (956) 682-3085
FAX (956) 664-0282
TBPE FIRM #F-312

Revision		
No.	Date	Description

STATE OF TEXAS
ROBERT L. SAENZ
82072
REGISTERED PROFESSIONAL ENGINEER
7-11-2018

100% CONSTRUCTION DOCUMENTS

BENCHMARKS PROVIDED BY CITY OF McALLEN
TBM #1
SET ON CURB INLET WITHIN PARK'S PARKING LOT LIMITS , APPROXIMATELY 450' WEST OF THE INTERSECTION OF QUINCE ST. AND N. BICENTENNIAL BLVD. ELEVATION= 115.16 (NAVD88) N= 16605622.31 E= 1070065.94 (NAD83)
TBM #2
SET ON CURB INLET AT THE SOUTHWEST CORNER OF TAMARACK AVENUE AND N. BICENTENNIAL BLVD. ELEVATION= 115.80 (NAVD88) N= 16606328.72 E= 1070579.89 (NAD83)

Project No.:	33348.001
Issued:	07/11/2018
Drawn By:	FC
Checked By:	RM
Scale:	AS NOTED
Sheet Title	DRAINAGE PLAN
Sheet Number	C3.01

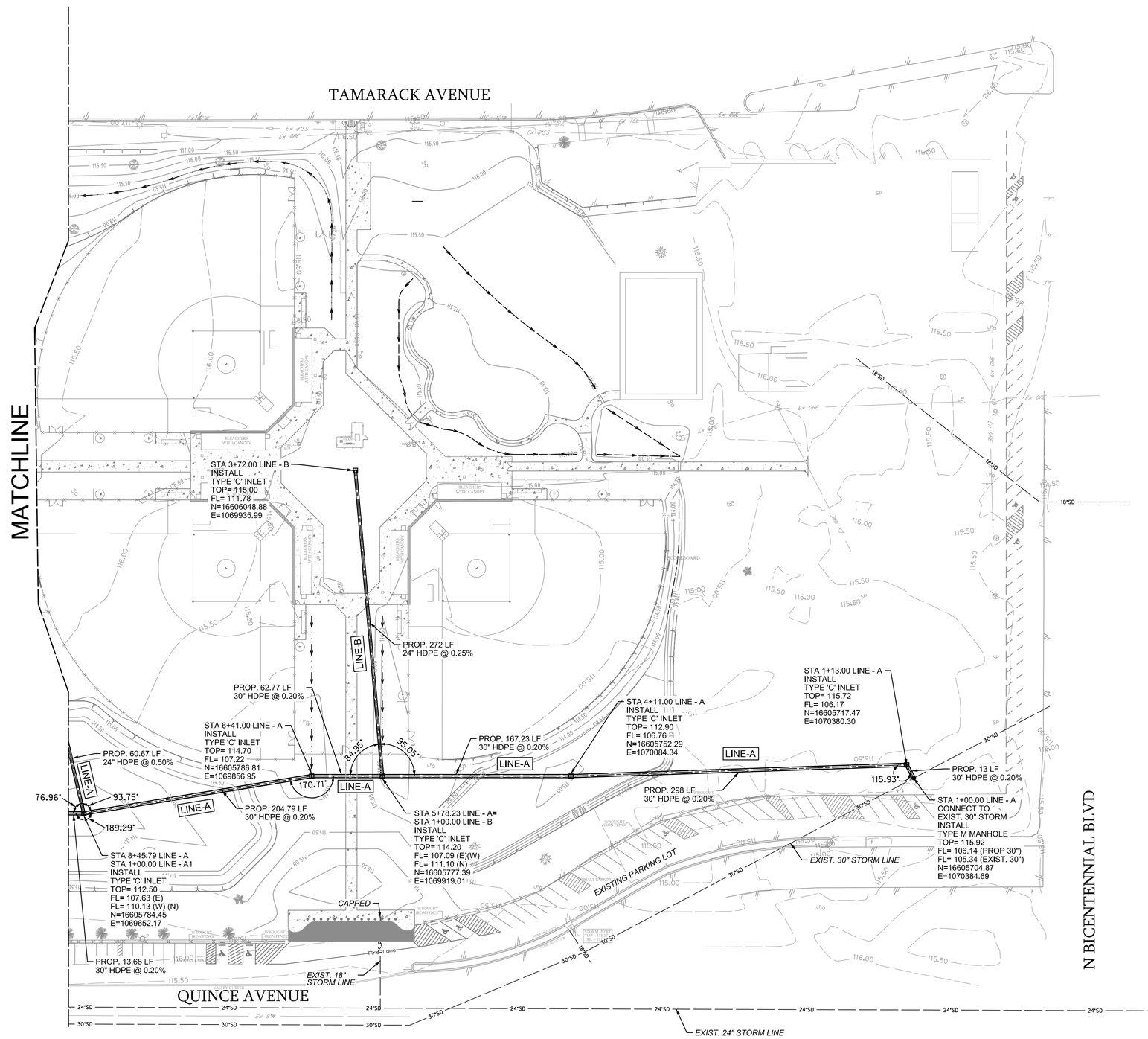

N

0 25 50 75 100

SCALE: 1"=50' (22 X 34)
SCALE 1"=100' (11 X 17)

LEGEND

PROPOSED	EXISTING	
■	CI	INLET
▥	GI	GRATE INLET
●	MH	MANHOLE
	WV	GATE VALVE & BOX
	WM	WATER METER
	FH	FIRE HYDRANT
	EX 6"SS	SAN. SEWER
W	EX 6"W	WATER
FIRE	Ex FIRE	FIRE PROTECTION
	36"SD	STORM SEWER
		ASPHALT PAVEMENT
		CONCRETE
		CAUTION UTILITY CROSSING

CITY OF McALLEN
SOFTBALL FIELD FACILITIES
MUNICIPAL PARK
McALLEN, TEXAS

McALLEN Parks & Recreation

HALFF
5000 WEST MILITARY HWY. SUITE 100
McALLEN, TX 78503
TEL (956) 682-0286
FAX (956) 664-0282
TBPE FIRM #F-312

Revision No.	Date	Description

STATE OF TEXAS
ROBERT L. SAENZ
82072
REGISTERED PROFESSIONAL ENGINEER
7.11.2018

100% CONSTRUCTION DOCUMENTS

Project No.:	33348.001
Issued:	07/11/2018
Drawn By:	FC
Checked By:	RM
Scale:	AS NOTED
Sheet Title	

DRAINAGE PLAN

C3.02
Sheet Number

BENCHMARKS PROVIDED BY CITY OF McALLEN

TBM #1
SET ON CURB INLET WITHIN PARK'S PARKING LOT LIMITS , APPROXIMATELY 450' WEST OF THE INTERSECTION OF QUINCE ST. AND N. BICENTENNIAL BLVD.
ELEVATION= 115.16 (NAVD88)
N= 16605622.31
E= 1070065.94
(NAD83)

TBM #2
SET ON CURB INLET AT THE SOUTHWEST CORNER OF TAMARACK AVENUE AND N. BICENTENNIAL BLVD.
ELEVATION= 115.80 (NAVD88)
N= 16606328.72
E= 1070579.89
(NAD83)

EIA
EX0JANDOC077

LAYER: LAYR_PLOTTABLE_BL
PAPER: LAYR_PLOTTABLE_BL
Date: 7/11/2018 8:35:52 AM
Login: HALFF
File: P:\33348001\CADD\Sheets\C3.02-DPA-33348.dgn

DETENTION CALCULATIONS

EXISTING DATA

TOTAL DISTURBED AREA= 17.47 ACRES
COMPUTED RUNOFF COEFFICIENT= 0.23
CALCULATED TIME OF CONCENTRATION= 30 MIN.
INTENSITY OF RAINFALL= 4.45 IN/HR (10 YR EVENT)
EXISTING Q= 18.09 CFS

PROPOSED DATA

COMPUTED RUNOFF COEFFICIENT= 0.31
PROPOSED TIME OF CONCENTRATION= 20
PROPOSED INTENSITY OF RAINFALL= 7.66 IN/HR (50 YR EVENT)
PROPOSED Q= 41.10 CFS

DETENTION

REQUIRED DETENTION= 0.58 ACRE FT.
PROVIDED DETENTION= 1.11 ACRE FT.

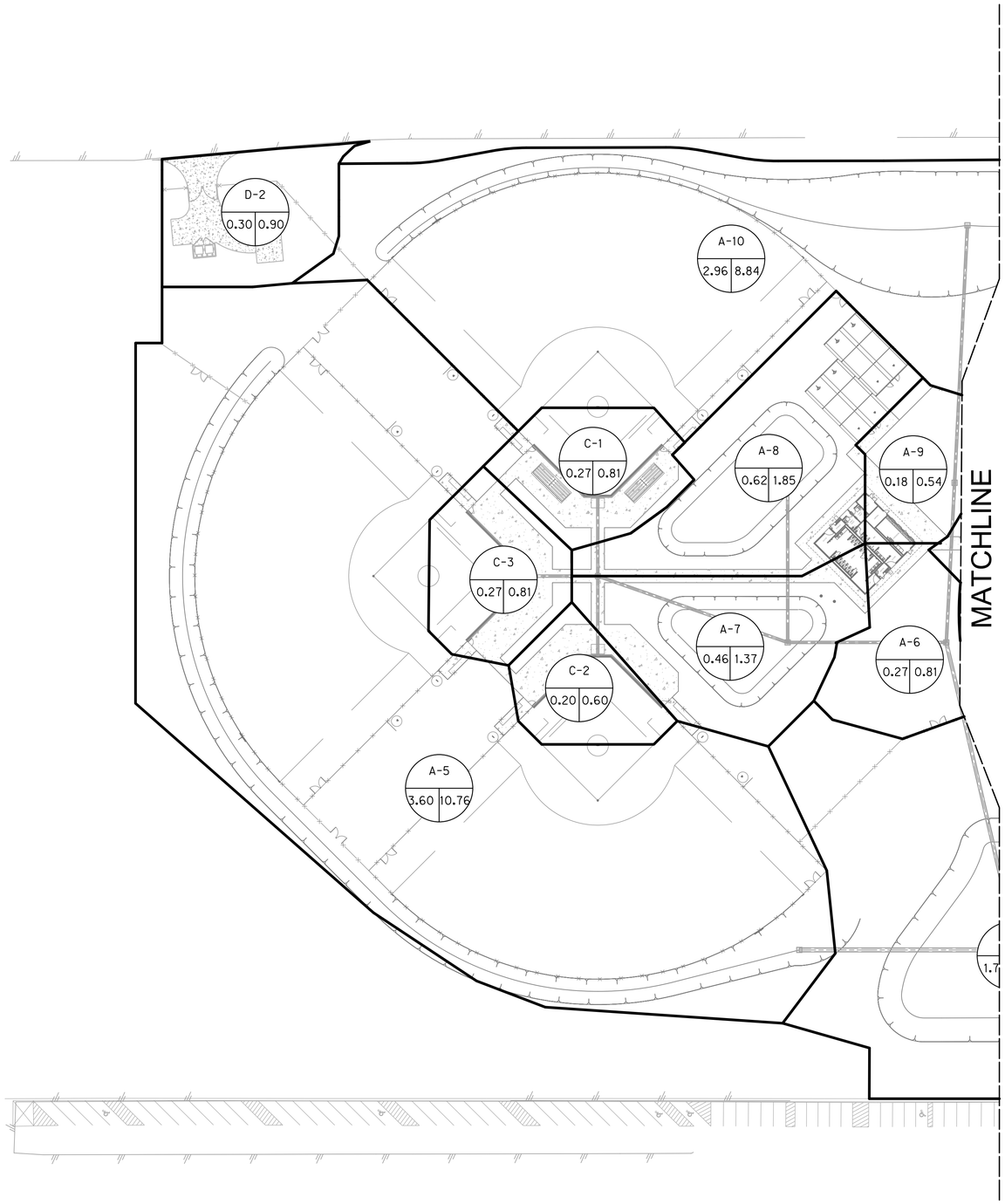

N

0 25 50 75 100

SCALE: 1"=50' (22 X 34)
SCALE 1"=100' (11 X 17)

LEGEND

PROPOSED	EXISTING	
	CI	INLET
	GI	GRATE INLET
	MH	MANHOLE
	WV	GATE VALVE & BOX
	WM	WATER METER
	FH	FIRE HYDRANT
	EX 6"SS	SAN. SEWER
W	EX 6"W	WATER
FIRE	Ex FIRE	FIRE PROTECTION
	36"SD	STORM SEWER
		ASPHALT PAVEMENT
		CONCRETE
		CAUTION UTILITY CROSSING

X-1 — AREA IDENTIFICATION
AC — ACREAGE (ACRES)
Q_{10} — 10-YEAR INLET FLOW (CFS)

Q = CIA
C = TABLE
Tc = TABLE
I(10yr) = TABLE

BENCHMARKS PROVIDED BY CITY OF McALLEN

TBM #1
SET ON CURB INLET WITHIN PARK'S PARKING LOT LIMITS , APPROXIMATELY 450' WEST OF THE INTERSECTION OF QUINCE ST. AND N. BICENTENNIAL BLVD.
ELEVATION= 115.16 (NAVD88)
N= 16605622.31
E= 1070065.94
(NAD83)

TBM #2
SET ON CURB INLET AT THE SOUTHWEST CORNER OF TAMARACK AVENUE AND N. BICENTENNIAL BLVD.
ELEVATION= 115.80 (NAVD88)
N= 16606328.72
E= 1070579.89
(NAD83)

CITY OF McALLEN
SOFTBALL FIELD FACILITIES
MUNICIPAL PARK
McALLEN, TEXAS

McALLEN Parks & Recreation

HALFF
5000 WEST MILITARY HWY, SUITE 100
McALLEN, TX 78503
TEL (956) 682-0286
FAX (956) 664-0282
TBPE FIRM #F-312

Revision		
No.	Date	Description

STATE OF TEXAS
ROBERT L. SAENZ
82072
REGISTERED PROFESSIONAL ENGINEER
7.11.2018

100% CONSTRUCTION DOCUMENTS

Project No.:	33348.001
Issued:	07/11/2018
Drawn By:	FC
Checked By:	RM
Scale:	AS NOTED

Sheet Title
DRAINAGE AREA MAP

C4.01
Sheet Number

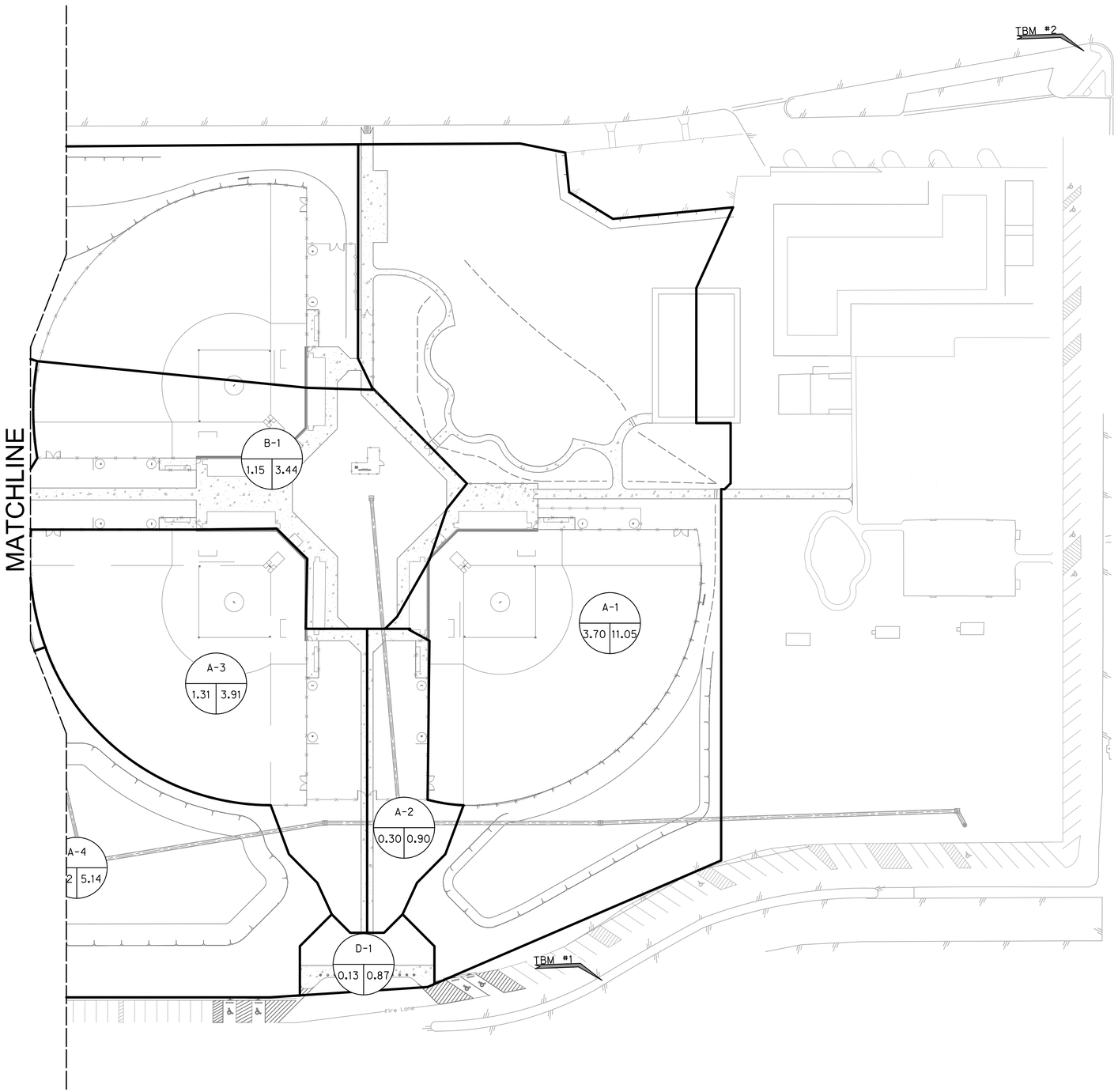

N

0 25 50 75 100

SCALE: 1"=50' (22 X 34)
SCALE 1"=100' (11 X 17)

LEGEND

PROPOSED	EXISTING	
	CI	INLET
	GI	GRATE INLET
	MH	MANHOLE
	WV	GATE VALVE & BOX
	WM	WATER METER
	FH	FIRE HYDRANT
	EX 6"SS	SAN. SEWER
W	EX 6"W	WATER
FIRE	Ex FIRE	FIRE PROTECTION
	36"SD	STORM SEWER
		ASPHALT PAVEMENT
		CONCRETE
		CAUTION UTILITY CROSSING

X-1 — AREA IDENTIFICATION

AC — ACREAGE (ACRES)

Q_{10} — 10-YEAR INLET FLOW (CFS)

Q = CIA
C = TABLE
Tc = TABLE
I(10yr) = TABLE

BENCHMARKS PROVIDED BY CITY OF McALLEN

TBM #1

SET ON CURB INLET WITHIN PARK'S PARKING LOT LIMITS , APPROXIMATELY 450' WEST OF THE INTERSECTION OF QUINCE ST. AND N. BICENTENNIAL BLVD.
ELEVATION= 115.16 (NAVD88)
N= 16605622.31
E= 1070065.94
(NAD83)

TBM #2

SET ON CURB INLET AT THE SOUTHWEST CORNER OF TAMARACK AVENUE AND N. BICENTENNIAL BLVD.
ELEVATION= 115.80 (NAVD88)
N= 16606328.72
E= 1070579.89
(NAD83)

CITY OF McALLEN
SOFTBALL FIELD FACILITIES
MUNICIPAL PARK
McALLEN, TEXAS

McALLEN Parks & Recreation

HALFF
5000 WEST MILITARY HWY. SUITE 100
McALLEN, TX 78503
TEL (956) 664-0286
FAX (956) 664-0282
TBPE FIRM #F-312

Revision No.	Date	Description

STATE OF TEXAS
ROBERT L. SAENZ
82072
REGISTERED PROFESSIONAL ENGINEER
7.11.2018

100% CONSTRUCTION DOCUMENTS

Project No.:	33348.001
Issued:	07/11/2018
Drawn By:	FC
Checked By:	RM
Scale:	AS NOTED

Sheet Title

DRAINAGE AREA MAP

C4.02

Sheet Number

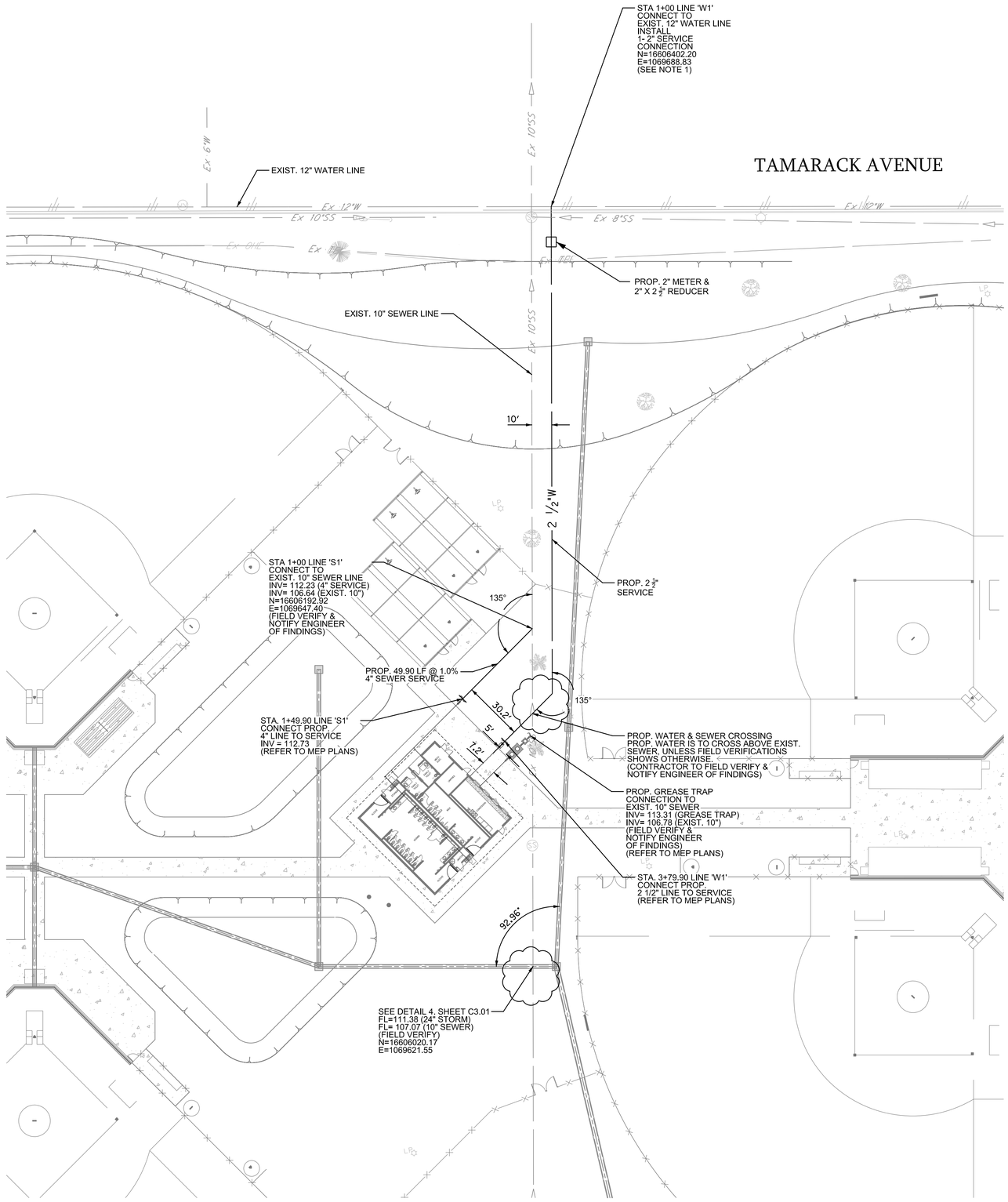

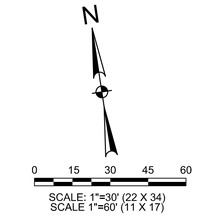

LEGEND

PROPOSED	EXISTING	
	CI	INLET
	GI	GRATE INLET
	MH	MANHOLE
	WV	GATE VALVE & BOX
	WM	WATER METER
	FH	FIRE HYDRANT
	EX 6"SS	SAN. SEWER
W	EX 6"W	WATER
FIRE	EX FIRE	FIRE PROTECTION
	36"SD	STORM SEWER
		ASPHALT PAVEMENT
		CONCRETE
		CAUTION UTILITY CROSSING

NOTES:
1. SAW CUTTING OF EXIST. PAVEMENT MAY BE REQUIRED TO CONNECT TO EXIST. 12" WATER. FIELD TO VERIFY. IF REQUIRED, IT'S THE CONTRACTOR'S RESPONSIBILITY TO REPLACE DISTURBED PAVEMENT AND CURB & GUTTER.

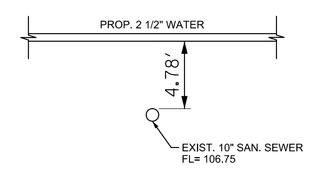

DETAIL '1'

NTS

BENCHMARKS PROVIDED BY CITY OF McALLEN
TBM #1
SET ON CURB INLET WITHIN PARK'S PARKING LOT LIMITS , APPROXIMATELY 450' WEST OF THE INTERSECTION OF QUINCE ST. AND N. BICENTENNIAL BLVD. ELEVATION= 115.16 (NAVD88) N= 16605622.31 E= 1070065.94 (NAD83)
TBM #2
SET ON CURB INLET AT THE SOUTHWEST CORNER OF TAMARACK AVENUE AND N. BICENTENNIAL BLVD. ELEVATION= 115.80 (NAVD88) N= 16606328.72 E= 1070579.89 (NAD83)

CITY OF McALLEN
SOFTBALL FIELD FACILITIES
MUNICIPAL PARK
McALLEN, TEXAS

McALLEN Parks & Recreation

HALFF
5000 WEST MILITARY HWY, SUITE 100
McALLEN, TX 78503
TEL (956) 664-0286
FAX (956) 664-0282
TBPE FIRM #F-312

Revision		
No.	Date	Description

STATE OF TEXAS
ROBERT L. SAENZ
82072
REGISTERED PROFESSIONAL ENGINEER
7.11.2018

100% CONSTRUCTION DOCUMENTS

Project No.:	33348.001
Issued:	07/11/2018
Drawn By:	FC
Checked By:	RM
Scale:	AS NOTED
Sheet Title	UTILITY PLAN

C5.01
Sheet Number

EROSION CONTROL LEGEND:

CURB/GRATE INLET PROTECTION

SF SILT FENCE

NOTE: THIS IS NOT A STORM WATER POLLUTION PREVENTION PLAN. CONTRACTOR MUST ADD HIS OPERATION SPECIFIC INFORMATION PER THE PERMIT REQUIREMENTS & INCLUDE ALL DOCUMENTATION & CERTIFICATES AS REQUIRED BY THE PERMIT.

NOTE:
STABILIZED CONSTRUCTION EXIT LOCATION TO BE DETERMINED BY CONTRACTOR.

N

0 50 100 150 200

SCALE: 1"=100'

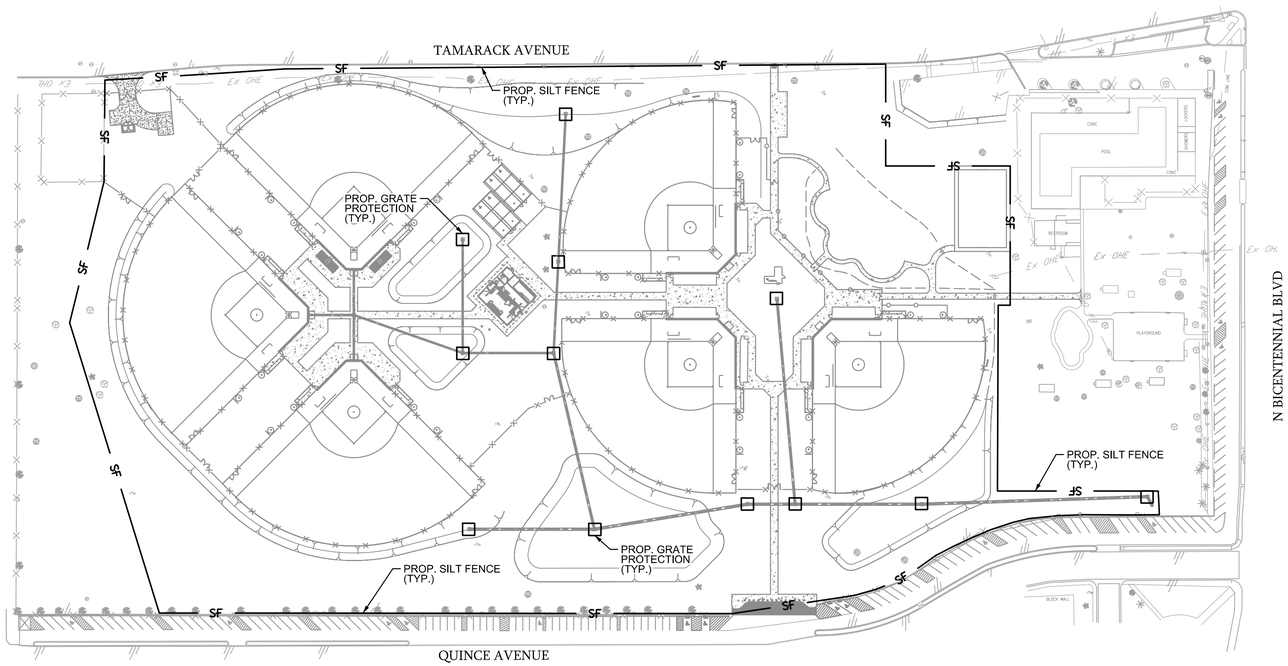

BENCHMARKS PROVIDED BY CITY OF McALLEN
TBM #1
SET ON CURB INLET WITHIN PARK'S PARKING LOT LIMITS , APPROXIMATELY 450' WEST OF THE INTERSECTION OF QUINCE ST. AND N. BICENTENNIAL BLVD. ELEVATION= 115.16 (NAVD88) N= 16605622.31 E= 1070065.94 (NAD83)
TBM #2
SET ON CURB INLET AT THE SOUTHWEST CORNER OF TAMARACK AVENUE AND N. BICENTENNIAL BLVD. ELEVATION= 115.80 (NAVD88) N= 16606328.72 E= 1070579.89 (NAD83)

CITY OF McALLEN
SOFTBALL FIELD FACILITIES
MUNICIPAL PARK
McALLEN, TEXAS

McALLEN Parks & Recreation

HALFF
5000 WEST MILITARY HWY, SUITE 100
McALLEN, TX 78503
TEL (956) 664-0285
FAX (956) 664-0282
TBPE FIRM #F-312

Revision		
No.	Date	Description
.	.	.
.	.	.
.	.	.
.	.	.
.	.	.
.	.	.
.	.	.

STATE OF TEXAS
ROBERT L. SAENZ
82072
REGISTERED PROFESSIONAL ENGINEER
7-11-2018

100% CONSTRUCTION DOCUMENTS

Project No.:	33348.001
Issued:	07/11/2018
Drawn By:	FC
Checked By:	RM
Scale:	AS NOTED

Sheet Title

SUGGESTED EROSION CONTROL PLAN

C6.00

Sheet Number

Date: 7/11/2018 8:55:58 AM
Drawing: I:\2018\33348001\CAD\Sheets\C6.00-EC-G33348.dgn
User: HALFF
Plot Date: Wed, Jul 11, 2018 8:55:58 AM
Plot Scale: 1:1
Plot Driver: PDF_Adobe_PS_Color.pdf

EROSION GENERAL NOTES

1. IT IS THE INTENT OF THIS SUGGESTED EROSION CONTROL PLAN AND WITHIN THE SPECIFICATIONS TO BE USED AS THE GENERAL GUIDELINES OF THE STORM WATER POLLUTION PREVENTION PLAN FOR THIS PROJECT TO ESTABLISH A MINIMUM BASIS OF COMPLIANCE WITH FEDERAL REGULATIONS. CONTRACTOR SHALL PREPARE AND SUBMIT A NOTICE OF INTENT PER THE REQUIREMENTS IN THE NPDES GENERAL PERMIT. THE CONTRACTOR SHALL PREPARE THE STORM WATER POLLUTION PREVENTION PLAN AND BE SOLELY RESPONSIBLE FOR ITS IMPLEMENTATION.
   THE STORM WATER POLLUTION PREVENTION PLAN SHALL MEET THE REQUIREMENTS SET FORTH IN THE TEXAS COMISSION ON ENVIRONMENTAL QUAILITY (TCEQ) TPDES GENERAL PERMIT FOR REGION 6 FOR STORM WATER DISCHARGES FROM CONSTRUCTION SITES.

2. THE STORM WATER POLLUTION PREVENTION PLAN SHOULD ADDRESS THREE GOALS:
   A) DIVERSION OF UPSLOPE WATER AROUND DISTURBED AREAS OF THE SITE;
   B) LIMITS THE EXPOSURE OF DISTURBED AREAS TO THE SHORTEST DURATION POSSIBLE; AND
   C) REMOVAL OF SEDIMENT FROM STORM WATER BEFORE IT LEAVES THE SITE.

3. THE CONTRACTOR SHALL MAKE THE STORM WATER POLLUTION PREVENTION PLAN AVAILABLE, UPON REQUEST, TO TCEQ.

4. THE CONTRACTOR MUST AMEND PLANS WHENEVER THERE IS A CHANGE IN DESIGN, CONSTRUCTION, OPERATION, OR MAINTENANCE OF THE PLAN, OR WHEN THE EXISTING PLAN PROVES INEFFECTIVE. MODIFICATIONS INCLUDING DESIGN AND ALL ADDITIONAL MATERIALS AND WORK SHALL BE ACCOMPLISHED BY THE CONTRACTOR AT NO ADDITIONAL EXPENSE TO THE OWNER.

5. STABILIZATION MEASURES ARE TO BE INSPECTED AT A MINIMUM OF ONCE EVERY 14 DAYS AND WITHIN 24 HOURS AFTER ANY STORM EVENT GREATER THAN 0.5 INCHES. REPAIRS AND INADEQUACIES REVEALED BY THE INSPECTION MUST BE IMPLEMENTED WITHIN 7 CALENDAR DAYS FOLLOWING THE INSPECTION.

6. AN INSPECTION REPORT THAT SUMMARIZES INSPECTION ACTIVITIES AND IMPLEMENTATION OF THE STORM WATER POLLUTION PREVENTION PLAN SHALL BE RETAINED AND MADE PART OF THE PLAN.

7. ALL CONTRACTORS AND SUBCONTRACTORS IDENTIFIED IN THE PLAN MUST CERTIFY AS TO AN UNDERSTANDING OF THE NPDES GENERAL PERMIT BEFORE CONDUCTING ANY ACTIVITY IDENTIFIED IN THE POLLUTION PREVENTION PLAN.

8. THE CONTRACTOR SHALL ADOPT APPROPRIATE CONSTRUCTION SITE MANAGEMENT PRACTICES TO PREVENT THE DISCHARGE OF OILS, GREASE, PAINTS, GASOLINE, AND OTHER POLLUTANTS TO STORM WATER. APPROPRIATE PRACTICES CAN INCLUDE:

   DESIGNATING AREAS FOR EQUIPMENT MAINTENANCE AND REPAIR;
   REGULAR COLLECTION OF WASTE;
   CONVENIENTLY LOCATED WASTE RECEPTACLES; AND
   DESIGNATING AND CONTROLLING EQUIPMENT WASHDOWN.

9. THE CONTRACTOR SHALL AMEND OR MODIFY THIS PLAN AS REQUIRED BY CONSTRUCTION MEANS, METHODS AND SEQUENCE. MODIFICATIONS SHALL NOT COMPROMISE THE INTENT OF THE REQUIREMENTS OF LAW AND THIS PLAN. MODIFICATIONS SHALL NOT BE BASIS FOR ADDITIONAL COST TO THE OWNER.

10. AREAS OF CONSTRUCTION ELSEWHERE ON THE JOB SITE SHALL CONFORM TO THE DETAILS SHOWN ON THE PLANS.

11. BORROW AREAS, IF EXCAVATED, SHALL BE PROTECTED AND STABILIZED UTILIZING THE PLAN DETAILS. ALL WORK SHALL CONFORM TO GOVERNMENTAL REQUIREMENTS AND BECOME PART OF THE STORM WATER POLLUTION PREVENTION PLAN (SWP3). THE WORK SHALL BE DONE BY THE CONTRACTOR AT NO ADDITIONAL EXPENSE TO THE OWNER.

12. ALL NON-PAVED AREAS SHALL BE MULCHED AND SEEDED WITH EROSION PROTECTION IMMEDIATELY UPON COMPLETION OF FINAL GRADING. THIS INCLUDES ALL DITCHES AND EMBANKMENTS. THE CONTRACTOR SHALL MAINTAIN FINAL GRADING AND KEEP SEEDED AREAS WATERED UNTIL FULLY ESTABLISHED AND ACCEPTED BY THE OWNER.

13. THE CONTRACTOR SHALL CONSTRUCT A STABILIZED CONSTRUCTION EXIT AT ALL TRAFFIC EXIT POINTS PRIOR TO EXITING ONTO ANY PAVED ROADWAY.

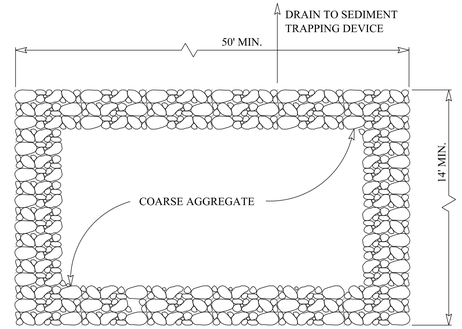

PLAN

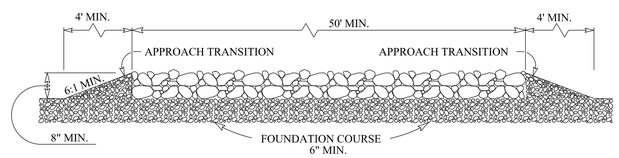

PROFILE

NOTES:

1. THE LENGTH OF THE TYPE 1 CONSTRUCTION EXIT SHALL BE AS INDICATED ON THE PLANS, BUT NOT LESS THAN 50'.
2. THE COARSE AGGREGATE SHOULD BE OPEN GRADED WITH A SIZE OF 4" TO 8".
3. THE APPROACH TRANSITIONS SHOULD BE NO STEEPER THAN 6:1 AND CONSTRUCTED AS DIRECTED BY THE ENGINEER.
4. THE CONSTRUCTION EXIT FOUNDATION COURSE SHALL BE FLEXIBLE BASE, BITUMINOUS CONCRETE, PORTLAND CEMENT CONCRETE OR OTHER MATERIAL AS APPROVED BY THE ENGINEER.
5. THE CONSTRUCTION EXIT SHALL BE GRADED TO ALLOW DRAINAGE TO A SEDIMENT TRAPPING DEVICE.
6. THE GUIDELINES SHOWN HEREON ARE SUGGESTIONS ONLY AND MAY BE MODIFIED BY THE ENGINEER.

CONSTRUCTION INGRESS/EGRESS
SEDIMENT CONTROL
TYPE 1

NTS

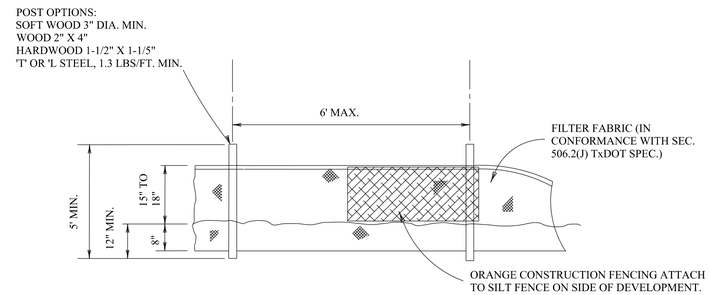

ELEVATION

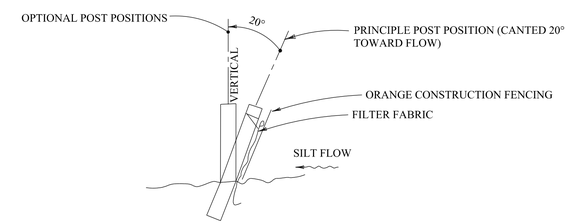

SECTION

SILT & CONSTRUCTION FENCE DETAIL

NTS

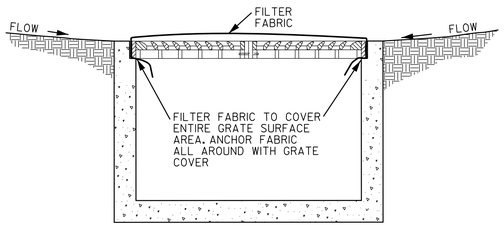

NOTE:

1.) FILTER FABRIC CURB INLET PROTECTION TO BE REMOVED WHEN SITE IS FULLY STABILIZED

2.) FILTER FABRIC TO BE CLEARED AFTER EACH RAIN EVENT AT EACH INLET

FILTER FABRIC
GRATE INLET PROTECTION

SCALE: NTS

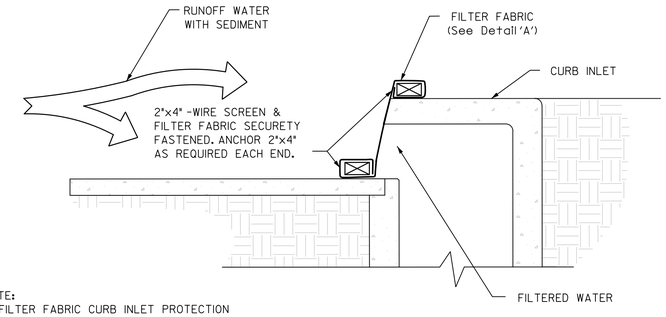

NOTE:

1.) FILTER FABRIC CURB INLET PROTECTION TO BE REMOVED WHEN SITE IS FULLY STABILIZED

2.) FILTER FABRIC TO BE CLEANED AFTER EACH RAIN EVENT

3.) 2X4 LUMBER TO BE CUT AS REQUIRED TO FIT CONTOURS OF GUTTER LINE.

4.) ALL BAGS TO BE USED FOR INLET PROTECTION TO BE U.V. RESISTANT.

FILTER FABRIC CURB
INLET PROTECTION

NTS

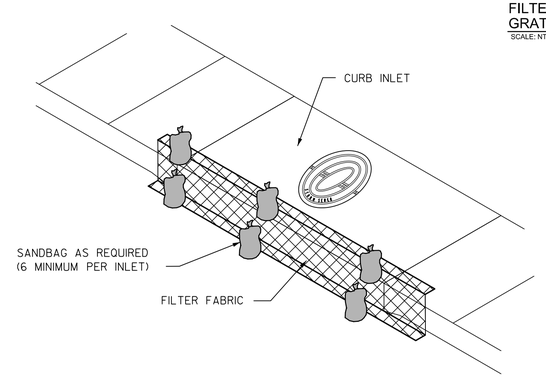

ISOMETRIC VIEW

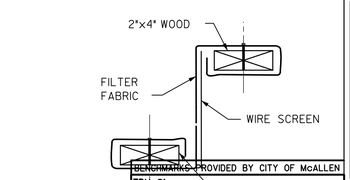

DETAIL A

NTS

BENCHMARKS PROVIDED BY CITY OF McALLEN

TBM #1

SET ON CURB INLET WITHIN PARK'S PARKING LOT LIMITS , APPROXIMATELY 450' WEST OF THE INTERSECTION OF QUINCE ST. AND N. BICENTENNIAL BLVD.
ELEVATION= 115.16 (NAVD88)
N= 16605622.31
E= 1070065.94
(NAD83)

TBM #2

SET ON CURB INLET AT THE SOUTHWEST CORNER OF TAMARACK AVENUE AND N. BICENTENNIAL BLVD.
ELEVATION= 115.80 (NAVD88)
N= 16606328.72
E= 1070579.89
(NAD83)

CITY OF McALLEN
SOFTBALL FIELD FACILITIES
MUNICIPAL PARK
McALLEN, TEXAS

McALLEN Parks & Recreation

HALFF
5000 WEST MILITARY HWY. SUITE 100
McALLEN, TX 78503
TEL (956) 682-0286
FAX (956) 684-0282
TBPE FIRM #F-312

Revision	
No.	Date	Description

STATE OF TEXAS
ROBERT L. SAENZ
82072
REGISTERED PROFESSIONAL ENGINEER
7-11-2018

100% CONSTRUCTION DOCUMENTS

Project No.:	33348.001
Issued:	07/11/2018
Drawn By:	FC
Checked By:	RM
Scale:	AS NOTED

Sheet Title

SUGGESTED EROSION CONTROL DETAILS

C7.00

Sheet Number

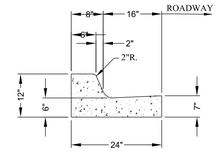

STANDARD CURB & GUTTER TYPE A

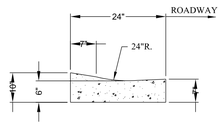

LAYDOWN CURB & GUTTER

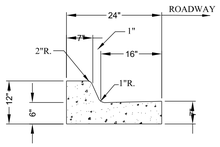

STANDARD CURB & GUTTER TYPE B

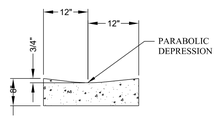

24" VALLEY GUTTER

GENERAL NOTES:

1. CURBS AND GUTTERS TO BE CONSTRUCTED OF 3000 PSI CONCRETE.
2. FOR NON-REINFORCED STANDARD CURB OR CURB & GUTTER PROVIDE SAWED CONTRACTION JOINTS 10' O.C. MAX. ALSO PROVIDE 1/2" EXPANSION JOINTS AT 30' O.C. MAX. AT POINTS OF CURVATURE, CURB INLETS, BOX CULVERTS, AT EACH SIDE OF DRIVEWAYS AND ADJACENT TO SIDEWALK.
3. FOR REINFORCED STANDARD CURB OR CURB & GUTTER PROVIDE SAWED CONTRACTION JOINTS 10' O.C. MAX AND EXPANSION JOINTS SHALL BE SPACED AT 120' O.C. MAX, AT POINTS OF CURVATURE, CURB INLETS, BOX CULVERTS, AT EACH SIDE OF DRIVEWAYS, AND ADJACENT TO SIDEWALKS.
4. EDGES NOT SPECIFIED WITH DIMENSIONS SHALL BE EDGED WITH A 3/8" EDGING TOOL.
5. A MEMBRANE CURING COMPOUND SHALL BE APPLIED TO EXPOSED CURB OR CURB & GUTTER AFTER THE SURFACE FINISH HAS BEEN COMPLETED AT A MIN. RATE OF 1 GAL/180 S.F. OF SURFACE AREA.
6. DESIGN ELEVATIONS TO BE GIVEN AT PC, PT AND MID POINT OF THE CURB RADII (FLOW OF CURB ELEVATION) AND AT INTERSECTIONS OF PROJECTED FLOWLINES (FLOWLINE ELEVATION).
7. ON UPSTREAM AND DOWNSTREAM ENDS OF THE INTERSECTION, VALLEY GUTTER CONSTRUCTION SHALL EXTEND TO THE END OF RETURNS.
8. THE VALLEY GUTTER TO BE REINFORCED WITH 6"X 6" X NO. 6 GA. WIRE MESH. OR NO. 3 @ 12" O.C.E.W. 4. INVERT OF VALLEY GUTTER TO EXTEND FROM FLOWLINE OF UPSTREAM CURB RETURN TO FLOWLINE OF DOWNSTREAM CURB RETURN.
9. FOR NEW CONSTRUCTION, VALLEY GUTTER SHALL BE CONSTRUCTED PRIOR TO ADJACENT PAVEMENT.
10. PRIOR TO CONSTRUCTION OF NEW VALLEY GUTTER ON EXISTING ACCEPTED STREETS, PAVEMENT SHALL BE REMOVED AS SHOWN ON PLANS.
11. FOR HANDICAP RAMP, SEE DETAIL.
12. EXISTING CURB OR PAVEMENT SHALL BE SAWCUT WHERE NECESSARY TO CONNECT TO PROPOSED VALLEY GUTTER.

CONCRETE CURB & GUTTER
NTS

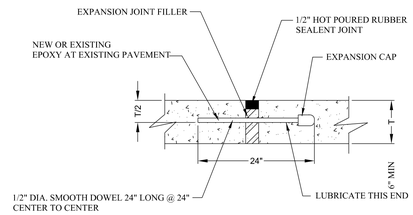

EXPANSION JOINT

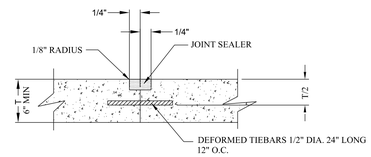

CONSTRUCTION JOINT

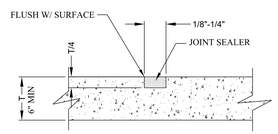

SAWED OR PREMOLDED STRIP LONGITUDINAL OR TRANSVERSE

SAWED CONTRACTION JOINT

TYPICAL CONCRETE JOINT DETAILS
NTS

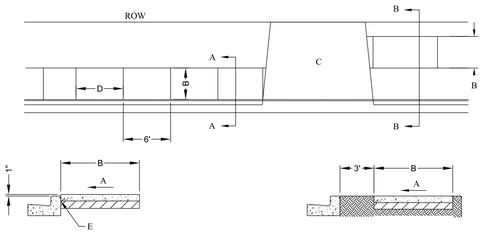

SECTION A-A
SIDEWALK ADJACENT TO CURB

SECTION B-B
SIDEWALK OFFSET 5 FT FROM CURB

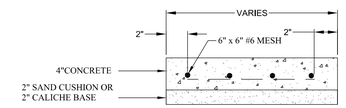

NOTE

1. CONCRETE SHALL HAVE 3000 PSI COMPRESSIVE STRENGTH AT 28 DAYS.
2. SUBGRADE SHALL BE COMPACTED TO 90% MAX DENSITY.

GENERAL NOTES:

1. DEVIATIONS FROM THESE STANDARDS SHALL BE SUBMITTED TO THE CITY ENGINEER FOR APPROVAL PRIOR TO CONSTRUCTION.
2. SIDEWALK SHALL BE CONSTRUCTED WITHIN STREET R.O.W.
3. PROVIDE 5' X 5' PASSING SPACE AT A MAXIMUM 200' INTERVALS, IF SIDEWALK IS LESS THAN 5' IN WIDTH (DRIVEWAY IS CONSIDERED A PASSING SPACE)

CONSTRUCTION NOTES:

A. CROSS-SLOPE AT 2.0% MAX.
B. SIDEWALK ALIGNMENT MUST MATCH EXISTING ALIGNMENT IN AREA OR BE SET A MINIMUM OF 3 FT FROM THE BACK OF CURB.
C. SEE DRIVEWAY APRON DETAIL.
D. CONTRACTION JOINTS EVERY 6 FT.; EXPANSION JOINT EVERY 30 FT. AND ALONG CURB AND GUTTER WHEN SIDEWALK ADJACENT TO CURB AND ALONG ANY STRUCTURE EXISTING.
E. 1/2" EXPANSION JOINT.

TYPICAL SIDEWALK DETAILS
NTS

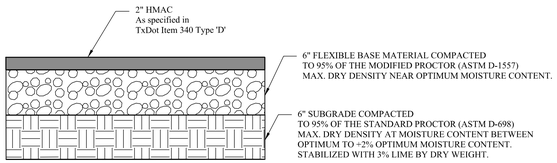

GEOTECH REPORT BY: TERRACON CONSULTANTS, INC.
PROJECT NO: 88175150 (SEPTEMBER 18,2017)

* THIS IS AN ESTIMATED RATE FOR BIDDING PURPOSES. THE ACTUAL PERCENTAGE OF LIME REQUIRED SHOULD BE DETERMINED BY APPROPRIATE LABORATORY TESTING AT THE TIME OF CONSTRUCTION.

ASPHALT PAVEMENT SECTION
NTS

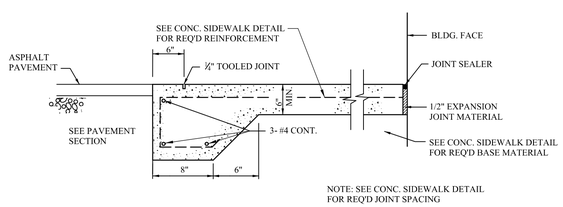

NOTE: SEE CONC. SIDEWALK DETAIL FOR REQ'D JOINT SPACING

SIDEWALK THICKENED EDGE ALONG ASPHALT PAVEMENT
NTS

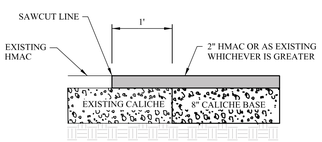

SAWCUT DETAIL
NTS

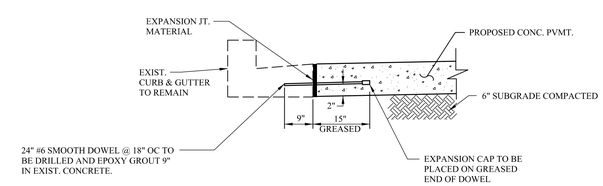

DOWEL DETAIL
NTS

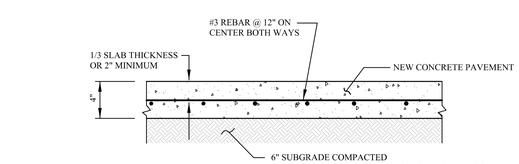

GEOTECH REPORT BY: TERRACON CONSULTANTS, INC.
PROJECT NO: 88175150 (SEPTEMBER 18,2017)

PAVEMENT SECTION: CONCRETE MIN. 3,500 PSI @28 DAYS
CONTRACTOR TO CUT 15' x 15' CONTROL JOINTS.
EXPANSION JOINTS NOT TO EXCEED 45 FT.

CONTRACTOR TO USE #6 DOWELS 14" LONG
@ 12"ON CENTER ON NEW CONSTRUCTION
JOINTS WHERE NEW PAVEMENTS ARE
POURED ON TWO SEPARATE DAYS.
(12" OF DOWEL TO BE GREASED)

PLAZA SIDEWALK
NTS

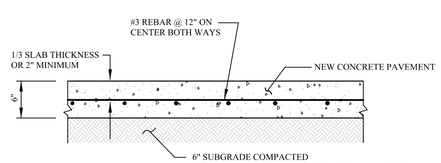

GEOTECH REPORT BY: TERRACON CONSULTANTS, INC.
PROJECT NO: 88175150 (SEPTEMBER 18,2017)

PAVEMENT SECTION: CONCRETE MIN. 3,500 PSI @28 DAYS
CONTRACTOR TO CUT 15' x 15' CONTROL JOINTS.
EXPANSION JOINTS NOT TO EXCEED 45 FT.

CONTRACTOR TO USE #6 DOWELS 14" LONG
@ 12"ON CENTER ON NEW CONSTRUCTION
JOINTS WHERE NEW PAVEMENTS ARE
POURED ON TWO SEPARATE DAYS.
(12" OF DOWEL TO BE GREASED)

ALTERNATE 2 CONCRETE DUMPSTER PAD & DRIVEWAY MAINTANCE BLDG. PAD
NTS

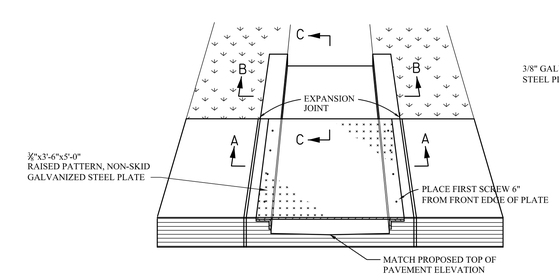

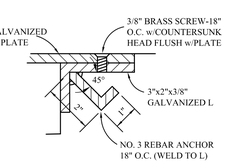

DETAIL "A"

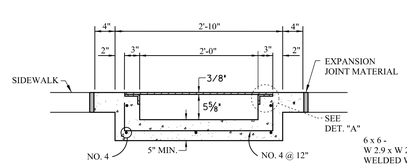

SECTION A-A

NOTE: WHERE WALK EXCEEDS 5'-0" IN WIDTH, THE PLATE MAY BE INSTALLED AS (2) SECTIONS OF EQUAL LENGTH

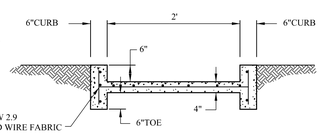

SECTION B-B

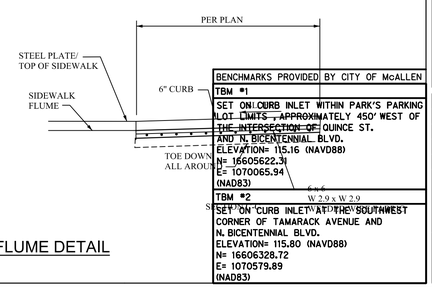

BENCHMARKS PROVIDED BY CITY OF McALLEN

TBM #1
SET ON CURB INLET WITHIN PARK'S PARKING LOT LIMITS , APPROXIMATELY 450' WEST OF THE INTERSECTION OF QUINCE ST. AND N. BICENTENNIAL BLVD.
ELEVATION= 115.16 (NAVD88)
N= 16605622.31
E= 1070065.94
(NAD83)

TBM #2
SET ON CURB INLET AT THE SOUTHWEST CORNER OF TAMARACK AVENUE AND N. BICENTENNIAL BLVD.
ELEVATION= 115.80 (NAVD88)
N= 16606328.72
E= 1070579.89
(NAD83)

CONCRETE FLUME & SIDEWALK FLUME DETAIL
NTS

CITY OF McALLEN
SOFTBALL FIELD FACILITIES
MUNICIPAL PARK
McALLEN, TEXAS

McALLEN Parks & Recreation

HALFF
5000 WEST MILITARY HWY. SUITE 100
McALLEN TX 78503
TEL (956) 682-0286
FAX (956) 664-0282
TBPE FIRM #F-312

Revision	
No.	Description

STATE OF TEXAS
ROBERT L. SAENZ
82072
REGISTERED PROFESSIONAL ENGINEER
7-11-2018

100% CONSTRUCTION DOCUMENTS

Project No.:	33348.001
Issued:	07/11/2018
Drawn By:	FC
Checked By:	RM
Scale:	AS NOTED
Sheet Title	PAVING DETAILS
Sheet Number	C8.00

* TRUNCATED DOME SURFACE
TO COMPLY WITH TAS IN
COMMERCIAL & INDSUTRIAL DRIVEWAY

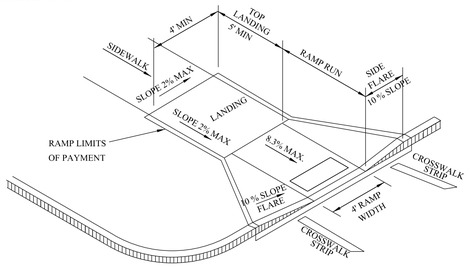

PERPENDICULAR CURB RAMP

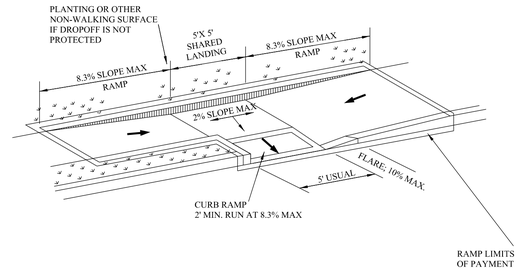

DENOTES PLANTING OR NON-WALKING SURFACE.

PARALLEL CURB RAMP
ADJACENT TO OR OFFSET FROM CURB

HANDICAP RAMP, DETAIL TYPE 20
PARALLEL CURB RAMP

NTS

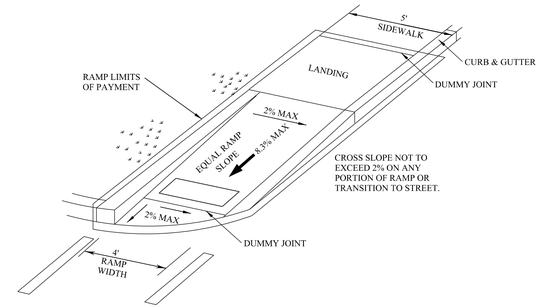

DENOTES PLANTING OR NON-WALKING SURFACE.

HANDICAP RAMP, DETAIL TYPE 10

NTS

PLANTING OR OTHER NON-WALKING SURFACE IF DROPOFF IS NOT PROTECTED

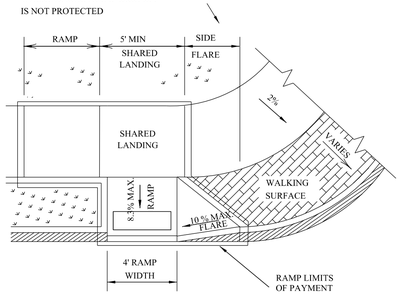

NOTES:

SEE GENERAL NOTES ON SHEET 2 OF 4 FOR MORE INFORMATION.

DENOTES PLANTING OR NON-WALKING SURFACE.

COMBINATION CURB RAMPS

HANDICAP RAMP, DETAIL TYPE 1

NTS

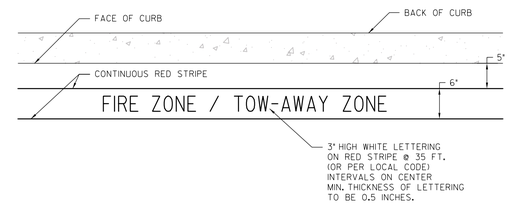

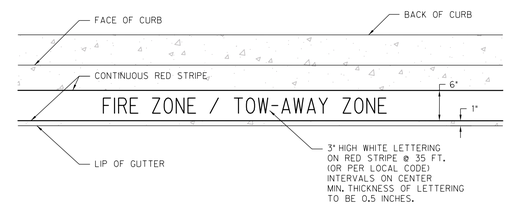

FIRE LANE DESIGNATION

NTS

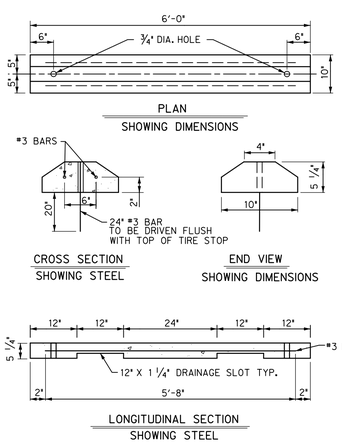

NOTE: ALL CONCRETE SHALL BE CLASS A.

CONCRETE WHEEL STOP WITH DRAINAGE SLOTS DETAIL

NTS

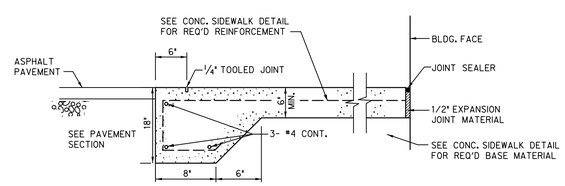

NOTE: SEE CONC. SIDEWALK DETAIL FOR REQ'D JOINT SPACING

SIDEWALK THICKENED EDGE ALONG ASPHALT PAVEMENT

NTS

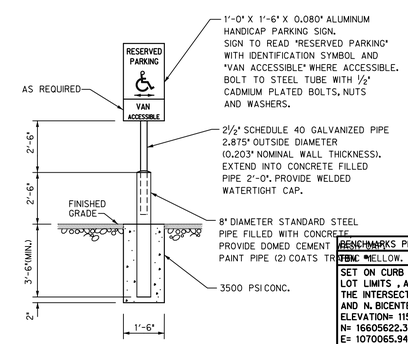

HANDICAP SIGN & SUPPORT

NTS

BENCHMARKS PROVIDED BY CITY OF McALLEN

TBM #1
SET ON CURB INLET WITHIN PARK'S PARKING LOT LIMITS , APPROXIMATELY 450' WEST OF THE INTERSECTION OF QUINCE ST. AND N. BICENTENNIAL BLVD.
ELEVATION= 115.16 (NAVD88)
N= 16605622.31
E= 1070065.94
(NAD83)

TBM #2
SET ON CURB INLET AT THE SOUTHWEST CORNER OF TAMARACK AVENUE AND N. BICENTENNIAL BLVD.
ELEVATION= 115.80 (NAVD88)
N= 16606328.72
E= 1070579.89
(NAD83)

CITY OF McALLEN
SOFTBALL FIELD FACILITIES
MUNICIPAL PARK
McALLEN, TEXAS

McALLEN Parks & Recreation

HALFF
5000 WEST MILITARY HWY. SUITE 100
McALLEN, TX 78503
TEL (956) 682-0286
FAX (956) 664-0282
TBPE FIRM #F-312

Revision		
No.	Date	Description

STATE OF TEXAS
ROBERT L. SAENZ
82072
REGISTERED PROFESSIONAL ENGINEER
7.11.2018

100% CONSTRUCTION DOCUMENTS

Project No.:	33348.001
Issued:	07/11/2018
Drawn By:	FC
Checked By:	RM
Scale:	AS NOTED

Sheet Title

PAVING DETAILS

C8.01

Sheet Number

File: K:\ENGINEERING\2018\33348001\CADD\Sheets\C8.01-PAVING DETAILS.dwg
Date: 7/11/2018 8:56:03 AM
HALFF
eICS63
Layout: 24x36_PAVING DETAILS
plotted by: FRANK CUADRA

NOTES:

1. CONTRACTOR TO CONTACT ALL UTILITIES COMPANIES IN THE AREA FOR FIELD VERIFICATION OF EXISTING FACILITIES. UTILITY COMPANY'S SHALL INCLUDE BUT NOT BE LIMITED TO THE FOLLOWING:

CITY OF McALLEN	956-681-3111
CENTRAL POWER & LIGHT CO.	800-274-2611
SOUTHERN UNION GAS CO.	800-743-2945
AT&T	800-288-2020
U.S. SPRINT CO.	956-948-3100
TIME WARNER CABLE	800-222-5355
TX. EXCAVATION SAFETY SYSTEM	800-344-8377

2. CONTRACTOR TO EXPOSE ANY EXISTING FACILITY THAT MAY BE IN CONFLICT PRIOR TO START OF CONSTRUCTION.
3. ALL EXISTING CITY UTILITIES (WATER/SEWER) SHOWN ARE FROM BEST INFORMATION AVAILABLE. NEITHER THE ENGINEER NOR THE CITY IS RESPONSIBLE FOR THE ACCURACY OF LOCATION.
4. CONTRACTOR SHALL AT ALL TIMES ALLOW ACCESS TO EXISTING DRIVEWAYS OR PROVIDE/MAINTAIN ALTERNATIVE ALL WEATHER ROUTES.
5. ALL TRAFFIC CONTROL DEVICES SHALL BE IN CONFORMANCE WITH TEXAS MANUAL OF UNIFORM TRAFFIC CONTROL DEVICES, LATEST EDITION.
6. TRENCHES OR EXCAVATIONS MAY NOT BE LEFT OPEN OVERNIGHT UNLESS AUTHORIZED IN WRITING BY THE ENGINEERING DEPARTMENT. IN SUCH CASES, THE CONTRACTOR MUST PROVIDE 1/2" STEEL PLATES OVER PLATES WITH ANCHORING AS PER SPECIFICATIONS TO BE PROVIDED BY THE CITY OF MCALLEN.
7. ANY DAMAGE TO FENCES, WALKS, OR PRIVATE PROPERTY SHALL BE REPAIRED BY THE CONTRACTOR AT HIS EXPENSE.
8. IT SHALL BE THE CONTRACTOR'S RESPONSIBILITY TO REMOVE ALL EXCAVATED MATERIAL AND DEBRIS FROM THE SITE AT NO ADDITIONAL EXPENSE TO THE OWNER.
9. THE CONTRACTOR IS RESPONSIBLE FOR SCHEDULING CONSTRUCTION MATERIALS TESTING THROUGH THE CITY'S DESIGNATED FIELD REPRESENTATIVE 24 HOURS PRIOR TO TESTING. CONTRACTOR IS RESPONSIBLE FOR ADHERING CLOSELY TO TESTING SCHEDULE AND AVOID ANY DELAYS IN THE FIELD.

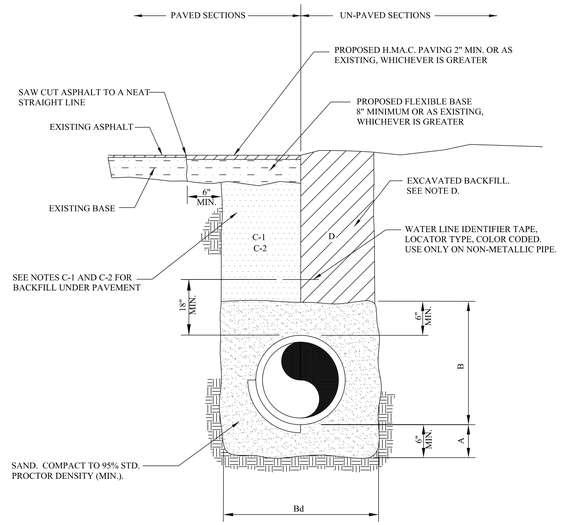

NOTES:

A. SAND BEDDING PLACED, HAND LEVELED, AND COMPACTED BEFORE PIPE IS LAID, UP TO BOTTOM OF PIPE (MIN. THICHKNESS = 6").

B. SAND BACKFILL PLACED AND COMPACTED AFTER PIPE IS LAID, FROM BOTTOM OF PIPE TO 6" ABOVE THE TOP OF PIPE. WORK IN UNDER PIPE HAUNCHES AND COMPACT BY HAND TO SPRING LINE. USE VIBRATORY-TYPE COMPACTORS FOR LIFTS ABOVE THE SPRING LINE. MAXIMUM 6" LIFTS.

Bd. MINIMUM TRENCH WIDTH: PIPE O.D. + 16" (FOR 16" PIPE AND SMALLER) OR PIPE O.D. X 1.25 + 12" (FOR 18" PIPE AND LARGER)

C-1. (CITY STREETS, PARKING AREA, AND DRIVEWAYS) SELECT EXCAVATED BACKFILL MECHANICALLY COMPACTED TO 95% STANDARD PROCTOR DENSITY IN 8" MAX. LIFTS.

C-2 (STATE MAINTAINED ROADWAY) SAND/CEMENT STABILIZED BACKFILL WITH 7% PORTLAND CEMENT COMPACTED TO 95% STANDARD PROCTOR DENSITY.

D. EXCAVATED EARTH BACKFILL MECHANICALLY COMPACTED IN 12" MAX. LIFTS. MINIMUM STANDARD PROCTOR DENSITY: 90% OUTSIDE RIGHT OF WAY; 95% INSIDE RIGHT OF WAY

EMBEDMENT SHALL BE IN ACCORDANCE WITH THE REQUIREMENTS OF ASTM D 2321. EMBEDMENT MATERIAL SHALL BE CLASS II OR III WITH < 50% PASSING A No. 200 SIEVE AND PLASTICITY INDEX < 7.

WHERE THIS STANDARD CONFLICTS WITH THE RECOMMENDATION OF ANY GEOTECHNICAL REPORT, OBTAIN WRITTEN CLARIFICATION FROM THE UTILITY ENGINEER PRIOR TO CONSTRUCTION.

FOUNDATION PREPARATION USING COBBLES, GRAVEL, CEMENT STABILIZATION, OR OTHER METHODS AS DIRECTED BY THE ENGINEER SHALL BE REQUIRED WHEN TRENCH BOTTOM IS UNSTABLE.

BACKFILLING AT STRUCTURES SHALL BE PLACED IN UNIFORM LAYERS, AND COMPACTED TO 95% STANDARD PROCTOR DENSITY IN 6" MAXIMUM LIFTS. STRUCTURE BACKFILL MATERIAL SHALL BE SAND.

WATER LINE AND SEWER
FORCEMAIN BEDDING DETAIL

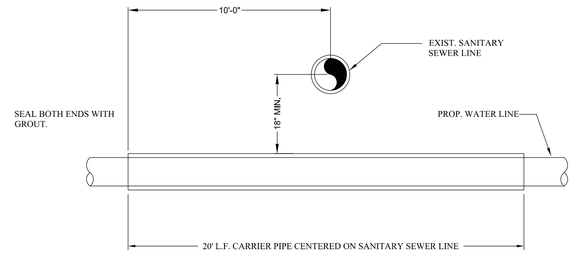

WATER LINE CROSSING
UNDER EXIST. S.S. LINE

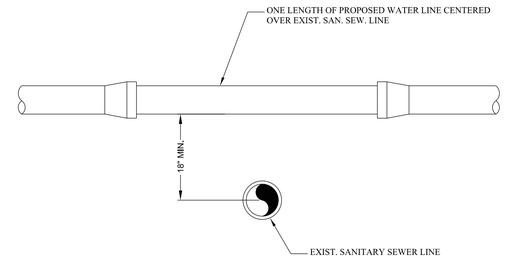

WATER LINE CROSSING
OVER EXIST. S.S. LINE

WATER LINE CROSSING
DETAIL

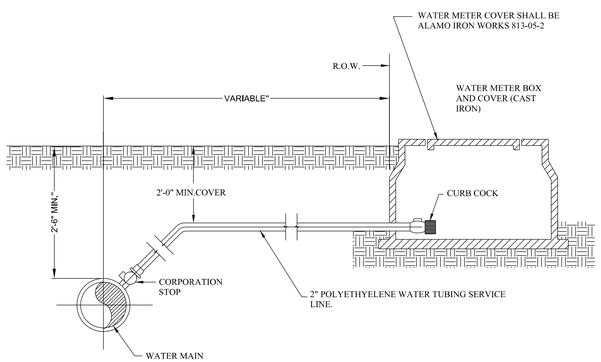

NOTES:

1. ALL SERVICE CONNECTIONS NEED TO HAVE A MIN. 2'-0" COVER FROM FINISHED GRADE.
2. WATER METER COVER SHALL BE ALAMO IRON WORKS 813-05-2.
3. ALL WATER MAINS HAVE 30 INCHES OF COVER FROM FINISHED GRADE.
4. METER BOX SHALL BE CAST IRON.
5. ALL CONCRETE TO HAVE A MIN. 28 DAYS COMPRESSIVE STRENGHT OF 3,000 P.S.I.
6. 2" GATE VALVE ONLY REQUIRED FOR 2" SERVICE.
7. POLYETHYLENE TUBING ACCEPTABLE FOR LINE SIZES 1" OR LESS, SCHEDULE 40 PVC REQUIRED FOR LINE SERVICES GREATER THAN 1".

CONSTRUCTION NOTES:

A. WATER VALVE COVER
B. CURB COCK
C. METER BOX & METER PROVIDED
D. WATER TUBING SERVICE LINE
E. CORPORATION STOP
F. WATER MAIN

TYPICAL SERVICE
CONNECTION
WITH METER BOX

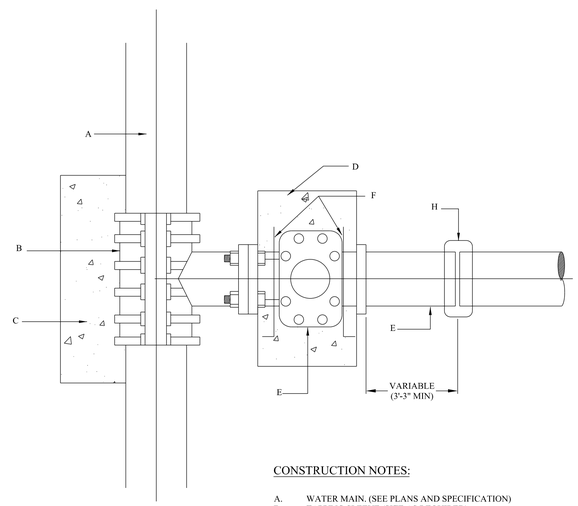

GENERAL NOTES:

1. ALL CONCRETE TO HAVE A MINIMUM OF 28 DAYS COMPRESSIVE STRENGTH OF 3,000 P.S.I.

CONSTRUCTION NOTES:

A. WATER MAIN. (SEE PLANS AND SPECIFICATION)
B. TAPPING SLEEVE (SIZE AS REQUIRED).
C. CONCRETE SUPPORT UNDER TAPPING SLEEVE AND BEHIND.
D. THRUST BLOCK AS PER SPECIFICATIONS.
E. FLANGED AND HUB ENDS "O" RING SEALS WITH 2" SQUARE WRENCH NUT GATE VALVE.
F. ANCHOR RODS.
G. PVC PIPE.
H. SIMPLEX COUPLING.

WATER TAPPING SLEEVE
& VALVE INSTALLATION

BENCHMARKS PROVIDED BY CITY OF McALLEN

TBM #1
SET ON CURB INLET WITHIN PARK'S PARKING LOT LIMITS , APPROXIMATELY 450' WEST OF THE INTERSECTION OF QUINCE ST. AND N. BICENTENNIAL BLVD.
ELEVATION= 115.16 (NAVD88)
N= 16605622.31
E= 1070065.94
(NAD83)

TBM #2
SET ON CURB INLET AT THE SOUTHWEST CORNER OF TAMARACK AVENUE AND N. BICENTENNIAL BLVD.
ELEVATION= 115.80 (NAVD88)
N= 16606328.72
E= 1070579.89
(NAD83)

CITY OF McALLEN
SOFTBALL FIELD FACILITIES
MUNICIPAL PARK
McALLEN, TEXAS

McALLEN Parks & Recreation

HALFF
5000 WEST MILITARY HWY. SUITE 100
McALLEN, TX 78503
TEL (956) 664-0088
FAX (956) 664-0282
TBPE FIRM #F-312

Revision No.	Date	Description

STATE OF TEXAS
ROBERT L. SAENZ
82072
REGISTERED PROFESSIONAL ENGINEER
7-11-2018

100%
CONSTRUCTION
DOCUMENTS

Project No.:	33348.001
Issued:	07/11/2018
Drawn By:	FC
Checked By:	RM
Scale:	AS NOTED

Sheet Title
WATER DETAILS

C9.00
Sheet Number

File: C:\Users\u33348\001\CADD\Sheets\C9.00-WATER DETAILS.dgn
HALFF
8/8/04 AM
7/11/2018

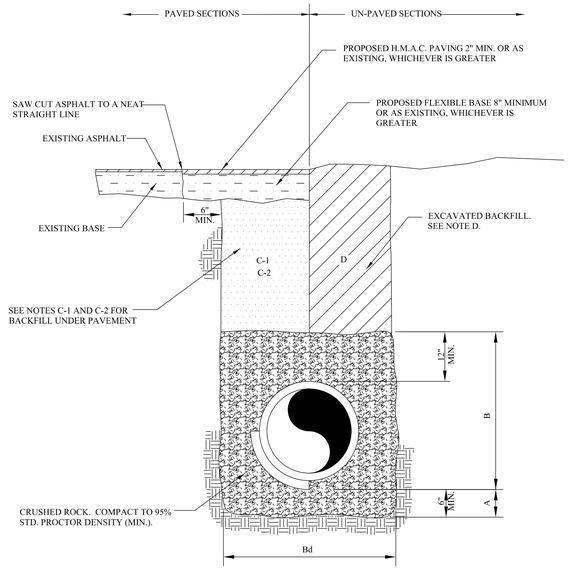

GENERAL NOTES:

A. CRUSHED ROCK BEDDING PLACED, HAND LEVELED, AND COMPACTED BEFORE PIPE IS LAID, UP TO BOTTOM OF PIPE (MIN. THICKNESS = 6").

B. CRUSHED ROCK BACKFILL PLACED AND COMPACTED AFTER PIPE IS LAID, FROM BOTTOM OF PIPE TO 12" ABOVE THE TOP OF PIPE. WORK IN UNDER PIPE HAUNCHES AND COMPACT BY HAND TO SPRING LINE. USE VIBRATORY-TYPE COMPACTORS FOR LIFTS ABOVE THE SPRING LINE. MAXIMUM 6" LIFTS.

Bd. MINIMUM TRENCH WIDTH: PIPE O.D. + 16" (FOR 16" PIPE AND SMALLER); PIPE O.D. X 1.25 + 12" (FOR 18" PIPE AND LARGER)

C-1. (CITY STREETS, PARKING AREA, AND DRIVEWAYS) SELECT EXCAVATED BACKFILL MECHANICALLY COMPACTED TO 95% STANDARD PROCTOR DENSITY IN 8" MAX. LIFTS.

C-2 (STATE MAINTAINED ROADWAY) SAND/CEMENT STABILIZED BACKFILL WITH 7% PORTLAND CEMENT COMPACTED TO 95% STANDARD PROCTOR DENSITY.

D. EXCAVATED EARTH BACKFILL MECHANICALLY COMPACTED IN 12" MAX. LIFTS. MINIMUM STANDARD PROCTOR DENSITY: 90% OUTSIDE RIGHT OF WAY; 95% INSIDE RIGHT OF WAY

EMBEDMENT SHALL BE IN ACCORDANCE WITH THE REQUIREMENTS OF ASTM D 2321. EMBEDMENT MATERIAL SHALL BE
CLASS 1A (CRUSHED ROCK) OR 1B (CRUSHED ROCK-SAND MIXTURE) WITH LESS THAN 50% PASSING A No. 4 SIEVE.
MAXIMUM ¾" SIZE FOR PIPE SIZE = 15". GREATER THAN 90% OF CRUSHED ROCK SHALL HAVE AT LEAST THREE BROKEN FACES. NO MORE THAN 2% UNBROKEN FRACTION ALLOWED.

IN SATURATED OR UNSTABLE SOILS, EMBEDMENT SHALL BE CLASS 1B ONLY (SEE SPECIFICATIONS FOR GRADATION REQUIREMENTS).

WHERE THIS STANDARD CONFLICTS WITH THE RECOMMENDATION OF ANY GEOTECHNICAL REPORT, OBTAIN WRITTEN
CLARIFICATION FROM THE UTILITY ENGINEER PRIOR TO CONSTRUCTION.

FOUNDATION PREPARATION USING COBBLES, GRAVEL, CEMENT STABILIZATION, OR OTHER METHODS AS APPROVED BY THE
ENGINEER SHALL BE REQUIRED WHEN TRENCH BOTTOM IS UNSTABLE.

BACKFILLING AT STRUCTURES SHALL BE PLACED IN UNIFORM LAYERS, AND COMPACTED TO 95% STANDARD PROCTOR
DENSITY IN 6" MAXIMUM LIFTS. STRUCTURE BACKFILL MATERIAL SHALL BE SAND.

SANITARY SEWER
(NON-FORCEMAIN)
PIPE BEDDING DETAIL

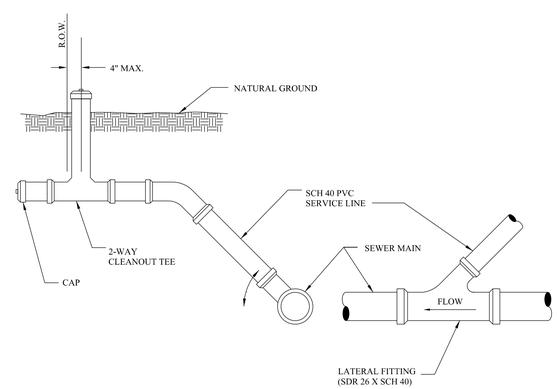

NOTES

1. INDIVIDUAL SERVICE LATERALS TO BE PROVIDED TO EACH LOT.
2. SINGLE FAMILY SERVICE SHALL BE 4" MIN. MULTI-FAMILY, COMMERCIAL, AND INDUSTRIAL SERVICE SHALL BE 6" OR GREATER AS REQUIRED.

STANDARD SERVICE
CONNECTION

BENCHMARKS PROVIDED BY CITY OF McALLEN
TBM #1
SET ON CURB INLET WITHIN PARK'S PARKING LOT LIMITS , APPROXIMATELY 450' WEST OF THE INTERSECTION OF QUINCE ST. AND N. BICENTENNIAL BLVD. ELEVATION= 115.16 (NAVD88) N= 16605622.31 E= 1070065.94 (NAD83)
TBM #2
SET ON CURB INLET AT THE SOUTHWEST CORNER OF TAMARACK AVENUE AND N. BICENTENNIAL BLVD. ELEVATION= 115.80 (NAVD88) N= 16606328.72 E= 1070579.89 (NAD83)

CITY OF McALLEN
SOFTBALL FIELD FACILITIES
MUNICIPAL PARK
McALLEN, TEXAS

McALLEN Parks & Recreation

HALFF
5000 WEST MILITARY HWY. SUITE 100
McALLEN, TX 78503
TEL (956) 664-0286
FAX (956) 664-0282
TBPE FIRM #F-312

Revision	
No.	Date	Description
.	.	.
.	.	.
.	.	.
.	.	.
.	.	.
.	.	.
.	.	.

STATE OF TEXAS
ROBERT L. SAENZ
82072
REGISTERED PROFESSIONAL ENGINEER
7-11-2018

100%
CONSTRUCTION
DOCUMENTS

Project No.:	33348.001
Issued:	07/11/2018
Drawn By:	FC
Checked By:	RM
Scale:	AS NOTED
Sheet Title	SEWER DETAILS
Sheet Number	C10.00

File: I:\2033\33348\01\CADD\Sheets\C10.00-WW-DETAILS-33348.dgn
7/11/2018 8:50:06 AM #H283 HALFF
USER: ECUNNINGHAM
LAYOUT: WW_DETAILS_TB
PLOT SCALE: 1.0000 PLOT DATE: 7/11/2018

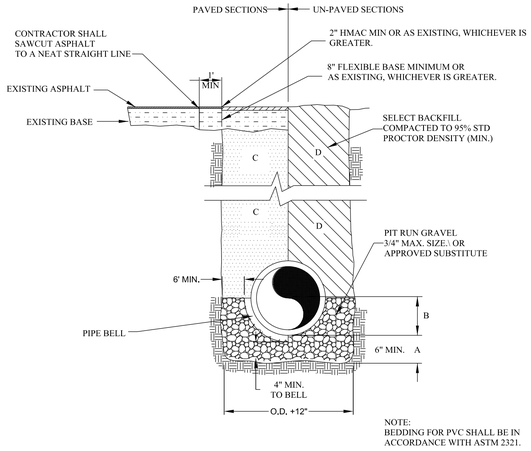

A. GRAVEL BEDDING PLACED BEFORE PIPE IS LAID UP TO FLOW LINE OF PIPE (MIN. THICKNESS=6") PIT RUN GRAVEL 3/4" MAX SIZE.

B. GRAVEL PLACED AFTER PIPE IS LAID, FROM BOTTOM OF PIPE TO THE SPRING LINE. PIT RUN GRAVEL 3/4" MAX. SIZE OR APPROVED SUBSTITUTE.

C. CITY STREETS PARKING AREA, DRIVEWAYS: SELECT EXCAVATED BACK FILL COMPACTED 95% STD, 8" LIFTS, MECHANICAL COMPACTION.

D. STATE MAINTAINED ROADWAYS: COMPACTED SAND/CEMENT STABILIZED BACK FILL 7% PORTLAND CEMENT COMPACTED AS PER ASTM D-4253 AND ASTM D-698.

E. SELECT EARTH BACKIFLL COMPACTED TO 95% STD. PROCTOR DENSITY (12" LIFTS, MECHANICAL COMPACTION) FOUNDATION PREPARATION (WELLPOINTS, GRAVEL OR CEMENT STABILIZATION, OR APPROVED SUBSTITUTE) SHALL BE REQUIRED WHEN TRENCH BOTTOM IS UNSTABLE. BACKFILLING AT STRUCTURES SHALL BE PLACED IN UNIFORM LAYERS, MOISTENED AS REQUIRED TO APPROXIMATE OPTIMUM MOISTURE CONTENT, AND COMPACTED TO 95% STD. PROCTOR DENSITY (USE RELATIVE DENSITY TEST PER ASTM D-4253 & ASTM D-698). THE THICKNESS OF EACH LOOSE LAYER SHALL NOT EXCEED 8". STRUCTURE BACK FILL MATERIAL SHALL BE SAND, EXCAVATED MATERIAL, OR OTHER APPROVED SUBSTITUTE.

TYPICAL STORM SEWER PIPE BEDDING DETAIL

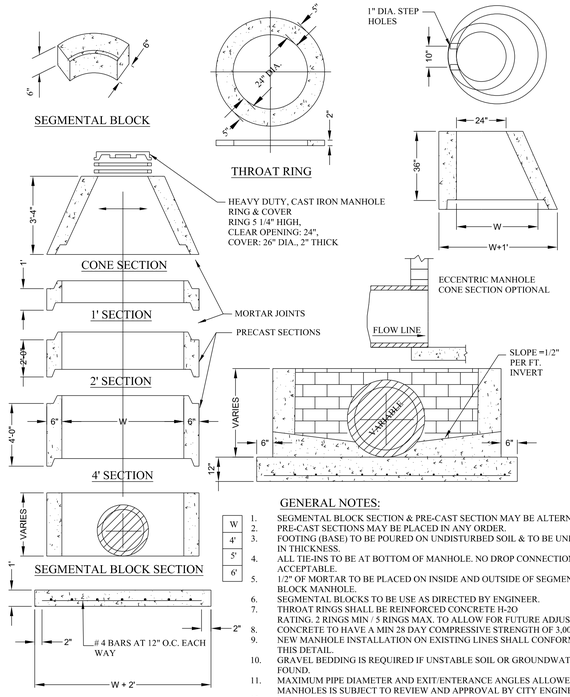

W
4'
5'
6'

GENERAL NOTES:

1. SEGMENTAL BLOCK SECTION & PRE-CAST SECTION MAY BE ALTERNATED.
2. PRE-CAST SECTIONS MAY BE PLACED IN ANY ORDER.
3. FOOTING (BASE) TO BE POURED ON UNDISTURBED SOIL & TO BE UNIFORM IN THICKNESS.
4. ALL TIE-INS TO BE AT BOTTOM OF MANHOLE. NO DROP CONNECTIONS ACCEPTABLE.
5. 1/2" OF MORTAR TO BE PLACED ON INSIDE AND OUTSIDE OF SEGMENTAL BLOCK MANHOLE.
6. SEGMENTAL BLOCKS TO BE USE AS DIRECTED BY ENGINEER.
7. THROAT RINGS SHALL BE REINFORCED CONCRETE H-2O RATING. 2 RINGS MIN / 5 RINGS MAX. TO ALLOW FOR FUTURE ADJUSTMENT. CONCRETE TO HAVE A MIN 28 DAY COMPRESSIVE STRENGTH OF 3,000 PSI.
8. NEW MANHOLE INSTALLATION ON EXISTING LINES SHALL CONFORM TO THIS DETAIL.
9. GRAVEL BEDDING IS REQUIRED IF UNSTABLE SOIL OR GROUNDWATER IS FOUND.
10. MAXIMUM PIPE DIAMETER AND EXIT/ENTERANCE ANGLES ALLOWED ON MANHOLES IS SUBJECT TO REVIEW AND APPROVAL BY CITY ENGINEER.
11. BACKFILL SHALL BE SAND COMPACTED TO 95% STANDARD PROCTOR.
12.

TYPICAL CONCRETE STORM MANHOLE

WATER TIGHT COVER AND RING FOR CITY OF McALLEN

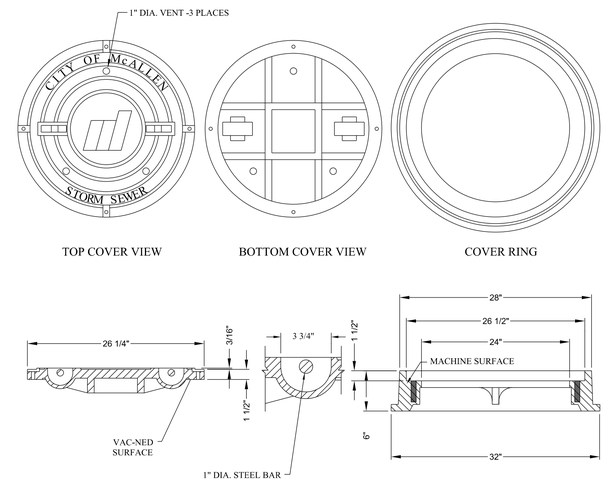

STORM SEWER MANHOLE COVER

PIPE SIZE	PART №
12"	1260-DS

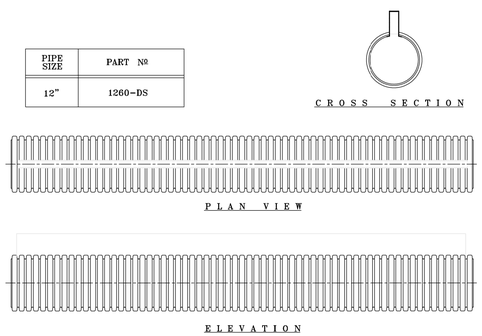

DURASLOT® Variable Height Slot Table

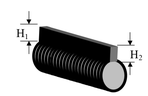

DURASLOT Number	H_1	H_2	DURASLOT Number	H_1	H_2
(Dia.) * - V1	2 1/2	3 1/8	(Dia.) * - V15	11 1/4	11 7/8
- V2	3 1/8	3 3/4	- V16	11 7/8	12 1/2
- V3	3 3/4	4 3/8	- V17	12 1/2	13 1/8
- V4	4 3/8	5	- V18	13 1/8	13 3/4
- V5	5	5 5/8	- V19	13 3/4	14 3/8
- V6	5 5/8	6 1/4	- V20	14 3/8	15
- V7	6 1/4	6 7/8	- V21	15	15 5/8
- V8	6 7/8	7 1/2	- V22	15 5/8	16 1/4
- V9	7 1/2	8 1/8	- V23	16 1/4	16 7/8
- V10	8 1/8	8 3/4	- V24	16 7/8	17 1/2
- V11	8 3/4	9 3/8	- V25	17 1/2	18 1/8
- V12	9 3/8	10	- V26	18 1/8	18 3/4
- V13	10	10 5/8	- V27	18 3/4	19 3/8
- V14	10 5/8	11 1/4	- V28	19 3/8	20

* Each piece will have a 3 or 4 digit number starting with pipe diameter.

Ex: The first piece in a line of 8" variable height slot = 8 - V1
The fourth piece in a line of 12" variable height slot = 12 - V4

12" DURASLOT WITH 6" SLOT DETAIL

NTS

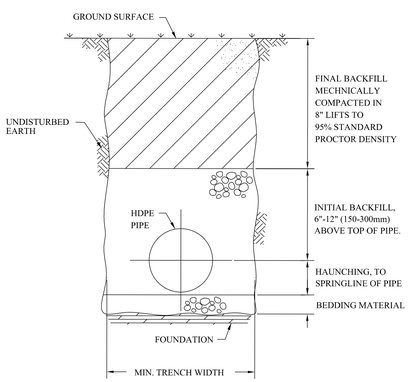

TYPICAL TRENCH CROSS-SECTION

* TOP OF PIPE TO BOTTOM OF BITUMINOUS PAVEMENT SECTION

NOTES:

1. FOUNDATION: WHERE THE TRENCH BOTTOM IS UNSTABLE, THE CONTRACTOR SHALL EXCAVATE TO A DEPTH REQUIRED BY THE ENGINEER AND REPLACE WITH A FOUNDATION OF CLASS I OR II MATERIAL AS DEFINED IN ASTM D2321, "STANDARD PRACTICE FOR INSTALLATION OF THERMOPLASTIC PIPE FOR SEWERS AND OTHER GRAVITY-FLOW APPLICATIONS," LATEST EDITION.

2. BEDDING: SUITABLE MATERIAL SHALL BE CLASS I, II OR III AND INSTALLED AS REQUIRED IN ASTM D2321, LATEST EDITION.

   UNLESS OTHERWISE SPECIFIED BY THE ENGINEER, MINIMUM BEDDING THICKNESS SHALL BE 4" (100mm) FOR 4"-24" (100-600mm) AND 42"-48"(1050-1200mm) CORRUGATED POLYETHYLENE PIPE (CPEP); 6" (150mm) FOR 30"-36" (750-900mm) CPEP.

3. HAUNCHING AND INITIAL BACKFILL: SUITABLE MATERIAL SHALL BE CLASS I, II OR III AND INSTALLED AS REQUIRED IN ASTM D2321, LATEST EDITION.

4. ALL HDPE DRAINGE SYSTEM SHALL BE WATERTIGHT PIPE WITH INTEGRAL BUILT IN BELL AND FACTORY GASKET. JOINTS MUST MEET OR EXCEED ASTM D3212 LAB TEST & ASTM F1417 WATERTIGHT FIELD TEST.

5. UNLESS OTHERWISE SPECIFIED BY THE ENGINEER, MINIMUM TRENCH WIDTHS SHALL BE AS FOLLOWS:

NOMINAL 0 in (mm)	MIN. RECOMMENDED TRENCH WIDTH, in (mm)
4 (100)	21 (530)
6 (150)	23 (580)
8 (200)	25 (630)
10 (250)	28 (710)
12 (300)	31 (790)
15 (375)	34 (860)
18 (450)	39 (990)
24 (600)	48 (1220)
30 (750)	66 (1680)
36 (900)	78 (1980)
42 (1050)	83 (2110)
48 (1200)	89 (2260)
60 (1500)	102 (2590)

6. MINIMUM COVER: MINIMUM RECOMMENDED DEPTHS OF COVER FOR VARIOUS LIVE LOADING CONDITIONS ARE SUMMARIZED IN THE FOLLOWING TABLE. UNLESS OTHERWISE NOTED, ALL DIMENSIONS ARE TAKEN FROM THE TOP OF PIPE TO THE GROUND SURFACE.

SURFACE LIVE LOADING CONDITION	* MINIMUM RECOMMENDED COVER, in (mm)
H25 (FLEXIBLE PAVEMENT)	12 (300)
H25 (RIGID PAVEMENT)	12 (300)
E80 RAILWAY	24 (610)
HEAVY CONSTRUCTION	48 (1220)

HDPE TRENCH INSTALLATION DETAIL

NTS

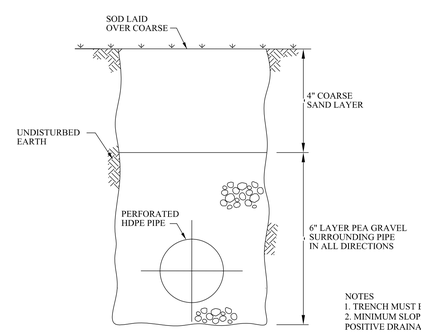

NOTES
1. TRENCH MUST BE NO LESS THAN 8" WIDE & 8" DEEP
2. MINIMUM SLOPE TO VARY AS REQUIRED TO PROVIDE POSITIVE DRAINAGE.

FRENCH DRAIN DETAIL (PERF HDPE)

NTS

BENCHMARKS PROVIDED BY CITY OF McALLEN
TBM #1
SET ON CURB INLET WITHIN PARK'S PARKING LOT LIMITS , APPROXIMATELY 450' WEST OF THE INTERSECTION OF QUINCE ST. AND N. BICENTENNIAL BLVD. ELEVATION= 115.16 (NAVD88) N= 16605622.31 E= 1070065.94 (NAD83)
TBM #2
SET ON CURB INLET AT THE SOUTHWEST CORNER OF TAMARACK AVENUE AND N. BICENTENNIAL BLVD. ELEVATION= 115.80 (NAVD88) N= 16606328.72 E= 10705579.89 (NAD83)

CITY OF McALLEN
SOFTBALL FIELD FACILITIES
MUNICIPAL PARK
McALLEN, TEXAS

McALLEN Parks & Recreation

HALFF
5000 WEST MILITARY HWY. SUITE 100
McALLEN, TX 78503
TEL (956) 682-0286
FAX (956) 664-0282
TBPE FIRM #F-312

Revision		
No.	Date	Description

STATE OF TEXAS
ROBERT L. SAENZ
82072
REGISTERED PROFESSIONAL ENGINEER
7-11-2018

100% CONSTRUCTION DOCUMENTS

Project No.:	33348.001
Issued:	07/11/2018
Drawn By:	FC
Checked By:	RM
Scale:	AS NOTED
Sheet Title	STORM DETAILS
Sheet Number	C11.00

Date: 7/11/2018 8:55:07 AM HALFF
File: C:\Users\33348001\CADD\Sheets\C11.00-STORTMS-33348.dgn
Plot Date: 7/11/2018 8:55:07 AM
Plot By: FRANCISCO CORTEZ

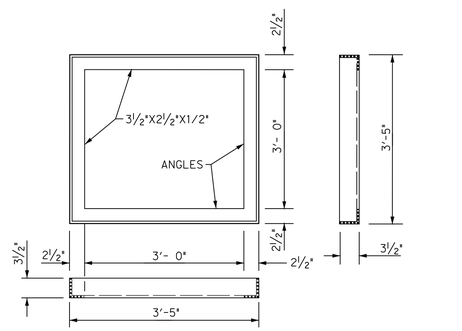

FRAME DETAIL
FRAME INLET GRATE TO BE SUBSIDIARY

GENERAL NOTES:
TY "C" INLET TO BE USED FOR PIPES LESS OR EQUAL TO 24"

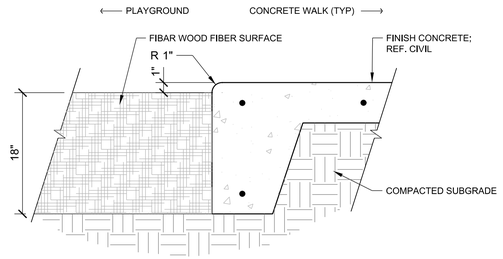

NOTES:
1. FIBAR BULK FOR PLAYGROUNDS; FIBAR PLAYGROUND SURFACES
2. LEA PARK AND PLAY, LEAPARKANDPLAY.COM; CONTACT: JONATHAN MCJUNKIN, EMAIL: JONATHAN@LEAPARKANDPLAY.COM, TEL: (830) 302-6938
3. PLACE FIBAR BULK ENGINEERED WOOD FIBER IN AREAS INDICATED ON SHEET L3.02
4. PLACE FIBAR SAFETY SURFACE IMMEDIATELY AFTER INSTALLING PLAYGROUND EQUIPMENT
5. INSTALL PER MANUFACTURER'S SPECIFICATIONS

FIBAR PLAYGROUND SURFACE
NTS

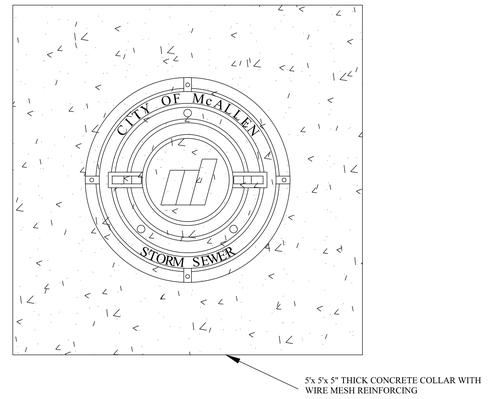

NOTES:
1. COLLAR IS REQUIRED ONLY WHEN MANHOLE IS OUT OF PAVEMENT.
2. STANDARD FRAME AND COVER SIZE SHALL BE USED.
3. A STEEL MANHOLE RISER, APPROVED HDPE ADJUSTING RINGS OR ADDITIONAL BRICKS MAY BE USED TO ELEVATE EXISTING MANHOLE COVERS TO RESURFACED GRADE (MAX. 4" HEIGHT).
4. COVER SHALL FIT FLUSH WITH THE FRAME WITH THE INFLOW PROTECTOR INSTALLED.

CONCRETE COLLAR

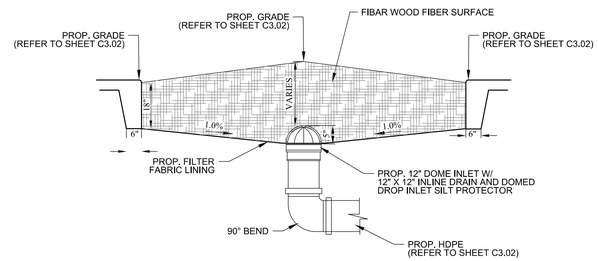

PLAYGROUND INLINE DRAIN (BY OTHERS)
NTS

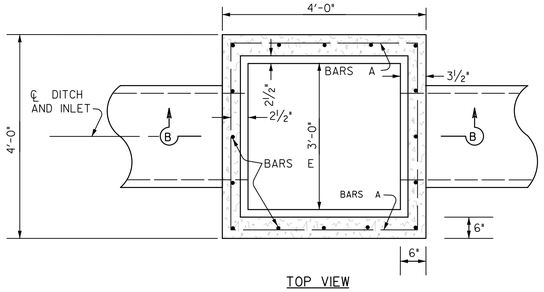

TOP VIEW

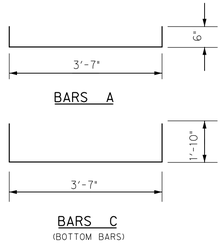

REINFORCING STEEL DETAILS
NOTE: ALL STEEL TO BE NO. 4 BARS ON 12" SPACING IN BOTH DIRECTIONS

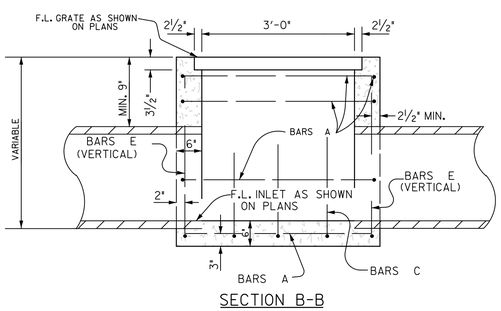

SECTION B-B

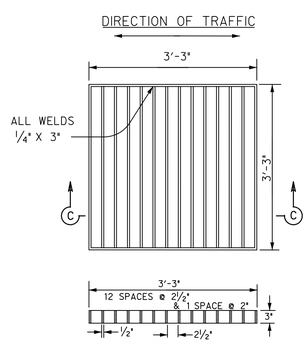

SECTION C-C

WELDED STEEL INLET GRATE

TYPE "C" PRECAST INLET
NTS

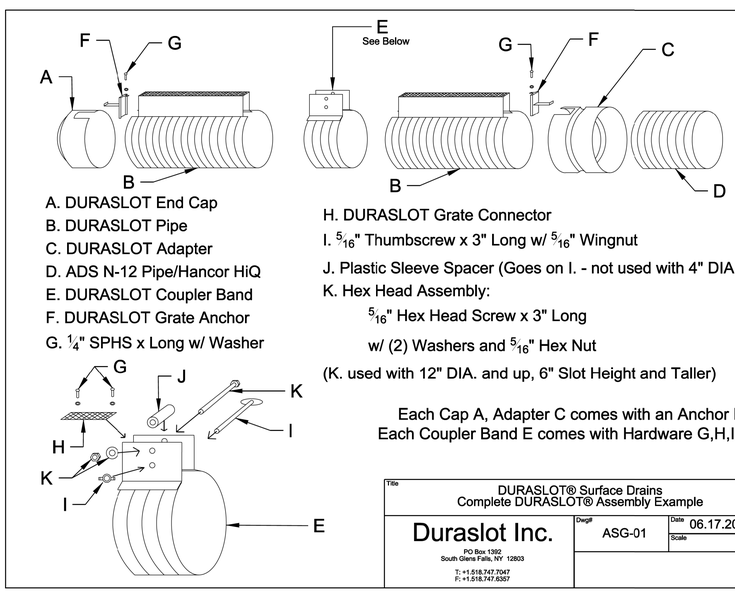

A. DURASLOT End Cap
B. DURASLOT Pipe
C. DURASLOT Adapter
D. ADS N-12 Pipe/Hancor HiQ
E. DURASLOT Coupler Band
F. DURASLOT Grate Anchor
G. 1/4" SPHS x Long w/ Washer

H. DURASLOT Grate Connector
I. 5/16" Thumbscrew x 3" Long w/ 5/16" Wingnut
J. Plastic Sleeve Spacer (Goes on I. - not used with 4" DIA.)
K. Hex Head Assembly:
5/16" Hex Head Screw x 3" Long
w/ (2) Washers and 5/16" Hex Nut
(K. used with 12" DIA. and up, 6" Slot Height and Taller)

Each Cap A, Adapter C comes with an Anchor F
Each Coupler Band E comes with Hardware G,H,I,J,K

Title	DURASLOT® Surface Drains Complete DURASLOT® Assembly Example
Duraslot Inc. PO Box 1392 South Glens Falls, NY 12803 T: +1.518.747.7047 F: +1.518.747.6357	Dwg# ASG-01 / Date 06.17.2013 / Scale

DURASLOT ASSEMBLY EXAMPLE
NTS

CITY OF McALLEN
SOFTBALL FIELD FACILITIES
MUNICIPAL PARK
McALLEN, TEXAS

McALLEN Parks & Recreation

HALFF
5000 WEST MILITARY HWY, SUITE 100
McALLEN, TX 78503
TEL (956) 682-0286
FAX (956) 664-0282
TBPE FIRM #F-312

Revision		
No.	Date	Description

STATE OF TEXAS
ROBERT L. SAENZ
82072
REGISTERED PROFESSIONAL ENGINEER
7.11.2018

100% CONSTRUCTION DOCUMENTS

Project No.:	33348.001
Issued:	07/11/2018
Drawn By:	FC
Checked By:	RM
Scale:	AS NOTED
Sheet Title	STORM DETAILS

C11.01
Sheet Number

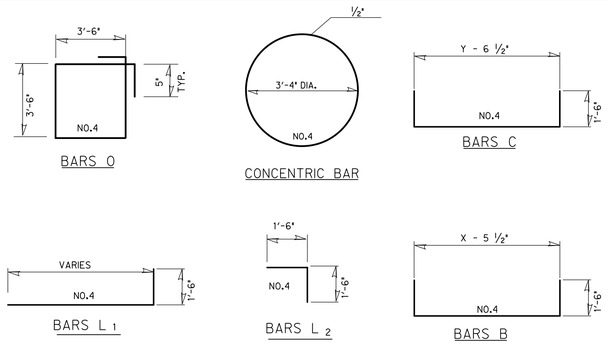

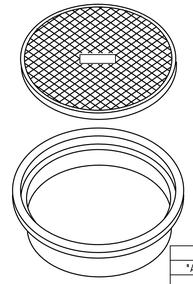

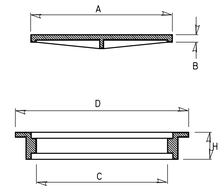

LID			RING				TOTAL WT.
"A"	"B"	WEIGHT	"C"	"D"	"H"	WEIGHT	
25⅝"	1"	125 lbs. (min)	24	32	5	185 lbs.	310 lbs.

RING & COVER DETAILS (STEEL)
(SUBSIDIARY)

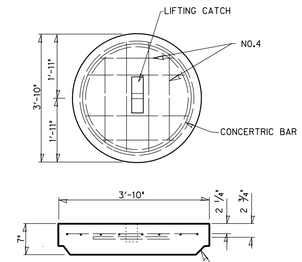

ELEVATION

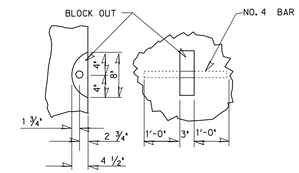

LIFTING CATCH

CONCRETE PIPE RISER COVER
OPTIONAL PRECAST CONCRETE LIFT-OFF COVER
(SUBSIDIARY)

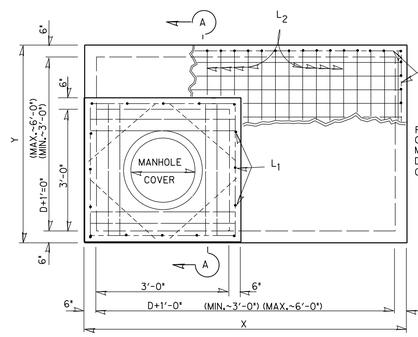

NOTE:
RISER, EITHER CAST-IN-PLACE OR CONCRETE PIPE. MAY BE LOCATED IN ANY CORNER. DISTANCE TO ROAD C IS FROM CENTER OF STRUCTURE.

PLAN

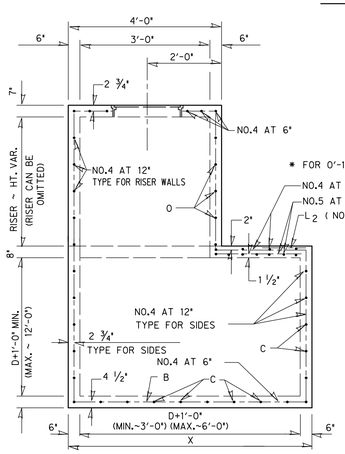

ELEVATION

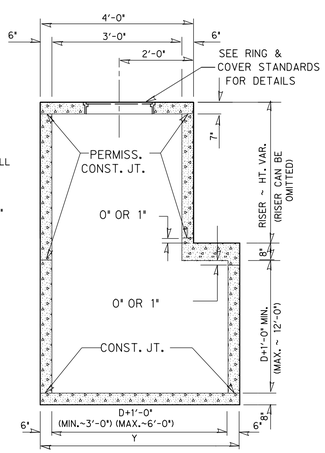

SECTION A-A

MANHOLE WITH CAST-IN-PLACE RISER

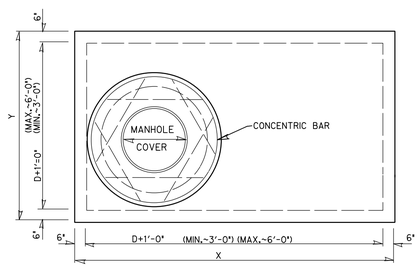

PLAN

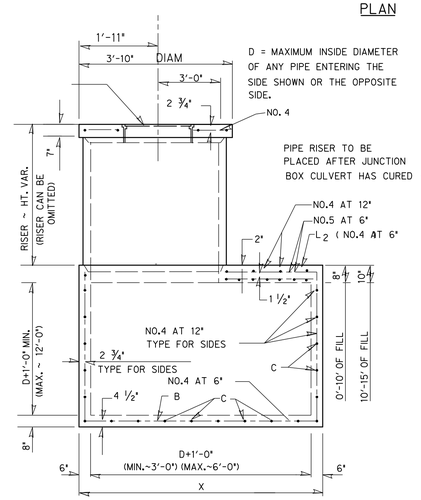

ELEVATION

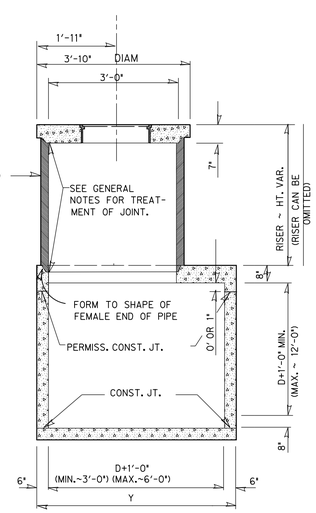

SECTION B-B

OPTIONAL MANHOLE WITH PIPE RISER

GENERAL NOTES

UNLESS OTHERWISE SHOWN IN THE PLANS. PAYMENT WILL BE MADE FOR EACH MANHOLE OF THE TYPE M.
EXPOSED EDGES SHALL BE CHAMFERED 3/4".
ALTERNATE DESIGN DRAWINGS BEARING THE SEAL OF A REGISTERED PROFESSIONAL ENGINEER WILL BE ACCEPTABLE FOR PRECAST CONSTRUCTION OF MANHOLES

SHOP DRAWINGS WILL NOT BE REQUIRED.

ALL MANHOLES LOCATED ON PAVED SURFACES WILL BE CONSTRUCTED WITH A COVER OF THE TYPE THAT WILL ENABLE IT TO BE BOLTED TO THE RING.

THE CONTRACTOR MAY WITH THE APPROVAL OF THE ENGINEER FURNISH MANHOLES OF EQUIVALENT STRUCTURAL DESIGN.

IN AREAS OF CONFLICT BETWEEN REINFORCING STEEL. BLOCK-OUTS PIPES, ANCHOR BOLTS OR OTHER REINFORCING STEEL. THE REINFORCEMENT SHALL BE BENT OR ADJUSTED TO CLEAR AS DIRECTED BY THE ENGINEER.

THE RISER MAY BE CONSTRUCTED OF REINFORCED CONCRETE AS SHOWN OR OF REINFORCED CONCRETE PIPE, CLASS III, IN ACCORDANCE WITH ASTM DESIGNATION C-76. IF PIPE IS USED, JOINTS SHALL CONFORM TO THE ITEM "REINFORCED CONCRETE PIPE CULVERTS". PRECAST CONCRETE LIFT OFF COVER MAY BE SUBSTITUTED FOR "RING AND COVER".

CONNECTING PIPES SHOULD WITHIN 10 DEG. OF NORMAL TO INLET GRATE IF NECESSARY. PIPE ELBOW OR CURBED APPROACH ALIGNMENT SHOULD BE USED TO STAY WITHIN THIS LIMIT.

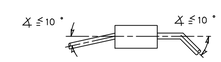

PIPES MAY ENTER ALL WALLS. THE MAXIMUM LEGTH OF PIPE THAT CAN BE ACCOMODATED IS 60". MORE THAN ONE PIPE MAY ENTER A SIDE SUBJECT TO THE MAXIMUM BOX DIMENSIONS SHOWN. THE CLEAR DISTANCE BETWEEN ADJACEMENT PIPES SHOULD BE 9" MINIMUM.

© TXDOT 2004

PHARR DISTRICT STANDARD

TEXAS DEPARTMENT OF TRANSPORTATION

TYPE "M"
MANHOLE
(JUNCTION BOX WITH ACCESS)

REV. 08/13 MANHOLE2.DGN

FED.RD. DIV.NO.	PROJECT NO.		FILE NO.			SHEET NO.
6						
STATE	STATE DIST.NO.	COUNTY	CONT.	SECT.	JOB	HIGHWAY NO.
TEXAS	21					

N.T.S.

AD-76-0

CITY OF McALLEN
SOFTBALL FIELD FACILITIES
MUNICIPAL PARK
McALLEN, TEXAS

McALLEN Parks & Recreation

HALFF
5000 WEST MILITARY HWY. SUITE 100
McALLEN TX 78503
TEL (956) 664-0286
FAX (956) 664-0282
TBPE FIRM #F-312

No.	Date	Revision Description

STATE OF TEXAS
ROBERT L. SAENZ
82072
REGISTERED PROFESSIONAL ENGINEER
7.11.2018

100% CONSTRUCTION DOCUMENTS

Project No.:	33348.001
Issued:	07/11/2018
Drawn By:	FC
Checked By:	RM
Scale:	AS NOTED
Sheet Title	STORM DETAILS

C11.02
Sheet Number

SYMBOLS LEGEND

X X'-XX"	X - DENOTES CEILING TYPE		EXHAUST AIR GRILLE
	X'-XX" - DENOTES CEILING HEIGHT		EXHAUST FAN, REF. MEP DRWGS
	1 X 4 SURFACE MOUNTED LIGHT FIXTURE, REF. ELECTRICAL		EXIT SIGN
	RECESSED CAN LIGHT, REF. ELECTRICAL		

CEILING TYPE

A		1/4" HARDIE SOFFIT PANEL CEILING, PAINTED
B		PRE-FINISHED METAL SOFFIT PANEL ON 1/2" DENS-GLASS SHEATHING BD.
C		OPEN TO STRUCTURE

FLOOR PLAN WALL LEGEND

- REINFORCED CMU - SEE STRUCTURAL - FINISHED AS SCHEDULED - BULLNOSE AT ALL OUTSIDE CORNERS
- 8 — 8" CMU - CAST STONE WAINSCOT w/ CAST STONE CAP & 8" CMU SPLIT-FACE ABOVE ON EXTERIOR FACE. SEALED & PAINTED ON INTERIOR FACE.
- 8A — 8" CMU - CAST STONE WAINSCOT w/ CAST STONE CAP & 8" CMU SPLIT-FACE ABOVE ON EXTERIOR FACE.
- 8B — 8" CMU - SEALED & PAINTED ON BOTH SIDES
- 8C — 8" CMU - SEALED & PAINTED ONE SIDE ONLY
- 8D — 8" CMU - CAST STONE WAINSCOT w/ CAST STONE CAP & 8" CMU SPLIT-FACE ABOVE ON EXTERIOR FACE. 5/8" DENSARMOR GYP. BD. (T.F.T.& PTD.) ON Z-FURRING STRIPS & 1 1/2" THERMAX SHEATHING RIGID INSULATION BD. ON INTERIOR FACE. REF. WALL SECTION: 3 / A4.3 SIM.
- 8E — 8" CMU - 5/8" DENSARMOR GYP. BD. (T.F.T.& PTD.) ON Z-FURRING STRIPS & 1 1/2" THERMAX SHEATHING RIGID INSULATION BD. SEALED & PAINTED OTHER SIDE. REF. WALL SECTION: 3 / A4.3
- RANDOM PATTERN ASHLAR CAST STONE WAINSCOT

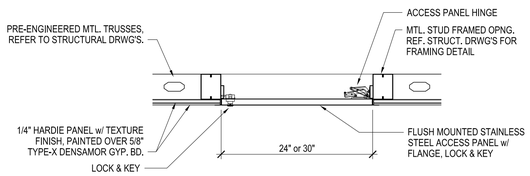

ATTIC ACCESS PANEL - SECTION (3)

SCALE: 1" = 1'-0"

REFLECTED CEILING PLAN KEY NOTES

1. 30" x 30" S.S. ACCESS PANEL w/ FLANGE & LOCK, REF. SECTION: 3 / A2.1
2. 24" x 24" S.S. ACCESS PANEL w/ FLANGE & LOCK, REF. SECTION: 3 / A2.1
3. EXHAUST FAN IN ATTIC SPACE, REF. MEP DRWG'S
4. SUPPLY FAN IN ATTIC SPACE, REF. MEP DRWG'S
5. SOFFIT MOUNTED AIR INTAKE GRILLE, REF. MEP DRWG'S
6. SURFACE MOUNTED SUPPLY AIR DIFFUSER, REF. MEP DRWG'S
7. **NOT USED**
8. EXHAUST DUCT UP TOWARDS ROOF VENT, REF. MEP DRWG'S
9. SURFACE MOUNTED RETURN GRILLE, REF. MEP DRWG'S
10. EXHAUST DUCT ROUTE IN ATTIC, REF. MEP DRWG'S
11. A/C CONDENSING UNIT WALL MOUNTED BELOW SOFFIT, REF. MEP DRWG'S
12. A/C SPLIT-SYSTEM UNIT WALL MOUNTED BELOW CEILING, REF. MEP DRWG'S
13. CMU HEADER AT OPENING, PAINTED
14. PRE-FINISHED METAL GUTTER, REF. WALL SECTIONS
15. SURFACE MOUNTED LIGHT FIXTURE, REF. ELECTRICAL LIGHTING PLAN
16. RECESS CAN LIGHT FIXTURE, REF. ELECTRICAL LIGHTING PLAN

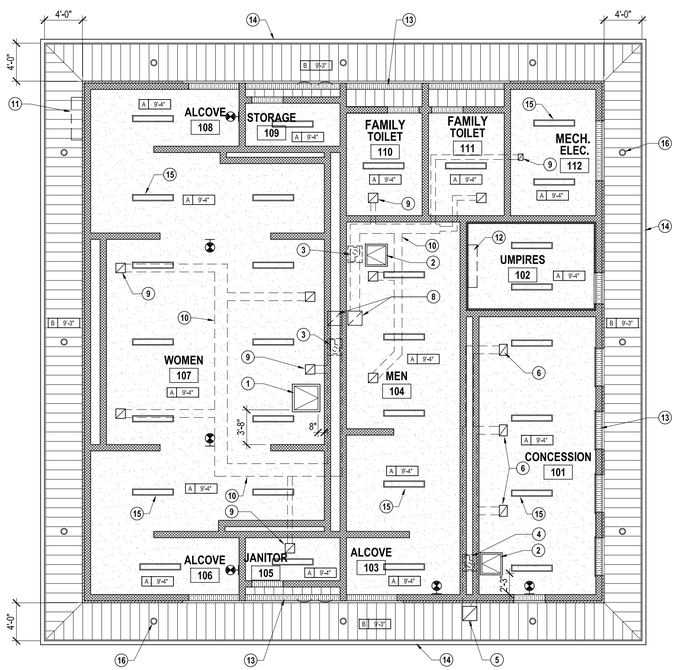

REFLECTED CEILING PLAN (2)

SCALE: 1/8" = 1'-0"

ROOM FINISH SCHEDULE

ROOM NO.	ROOM NAME	FLOOR	BASE	WALLS NORTH	WALLS EAST	WALLS WEST	WALLS SOUTH	CEILING FINISH	NOTES	ROOM NO.
101	CONCESSION	CONC	NONE	PTD	PTD	PTD	PTD	PTD		101
102	UMPIRES	CONC	NONE	PTD	PTD	PTD	PTD	PTD		102
103	ALCOVE	CONC	NONE	PTD	PTD	PTD	PTD	PTD		103
104	MEN	CONC	NONE	PTD	PTD	PTD	PTD	PTD		104
105	JANITOR	CONC	NONE	PTD	PTD	PTD	PTD	PTD		105
106	ALCOVE	CONC	NONE	PTD	PTD	PTD	PTD	PTD		106
107	WOMEN	CONC	NONE	PTD	PTD	PTD	PTD	PTD		107
108	ALCOVE	CONC	NONE	PTD	PTD	PTD	PTD	PTD		108
109	STORAGE	CONC	NONE	PTD	PTD	PTD	PTD	PTD		109
110	FAMILY TOILET	CONC	NONE	PTD	PTD	PTD	PTD	PTD		110
111	FAMILY TOILET	CONC	NONE	PTD	PTD	PTD	PTD	PTD		111
112	MECH. / ELEC.	CONC	NONE	PTD	PTD	PTD	PTD	PTD		112

ROOM FINISH NOTES

DOOR & FRAME TYPE

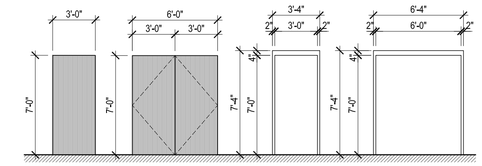

(1) EXTERIOR HOLLOW METAL INSULATED, PAINTED
(2) EXTERIOR HOLLOW METAL INSULATED, PAINTED
(A) EXTERIOR HOLLOW METAL FRAME, PAINTED
(B) EXTERIOR HOLLOW METAL FRAME, PAINTED

DOOR SCHEDULE

DOOR NO.	ROOM NAME	DOOR TYPE	DOOR LEAF	DOOR WIDTH	DOOR HEIGHT	DOOR MATERIAL	DOOR FINISH	FRAME TYPE	FRAME WIDTH	FRAME HEIGHT	FRAME MATERIAL	FRAME FINISH	HRDWR SET	KEYED NOTES	FIRE RATED MIN	DOOR NO.
101	CONCESSION	1	SINGLE	3'-0"	7'-0"	HM	PTD	A	3'-4"	7'-4"	HM	PTD				101
102	UMPIRES	1	SINGLE	3'-0"	7'-0"	HM	PTD	A	3'-4"	7'-4"	HM	PTD				102
103	JANITOR	1	SINGLE	3'-0"	7'-0"	HM	PTD	A	3'-4"	7'-4"	HM	PTD				103
104	STORAGE	1	SINGLE	3'-0"	7'-0"	HM	PTD	A	3'-4"	7'-4"	HM	PTD				104
105	FAMILY TOILET	1	SINGLE	3'-0"	7'-0"	HM	PTD	A	3'-4"	7'-4"	HM	PTD				105
106	FAMILY TOILET	1	SINGLE	3'-0"	7'-0"	HM	PTD	A	3'-4"	7'-4"	HM	PTD				106
107	MECH. / ELEC.	2	PAIR	3'-0"	7'-0"	HM	PTD	B	6'-4"	7'-4"	HM	PTD				107

KEYED NOTES

1. ALL HOLLOW METAL DOORS AND FRAMES TO BE WELDED AND PAINTED. REF SPECS. GRIND ALL EXPOSED WELDS; SMOOTH PRIOR TO APPLYING FINAL FINSH.
2. FIELD VERIFY SIZE OF ALL EXISTING OPENINGS PRIOR TO ORDERING FRAMES.
3. REFER TO WALL TYPES LEGEND AND SPECIFICTIONS FOR SPECIFIC CONSTRUCTION MATERIALS USED IN WALL CONSTRUCTION
4. ROUGH OPENING OF FRAME SHALL BE 4" MIN FROM ADJACENT WALL U.N.O.
5. REFER TO SPECIFICATION "DOOR HARDWARE" FOR DOOR HARDWARE
6. ALL DOORS SHALL HAVE DOOR STOPS
7. FIELD VERIFY MASONRY OPENING HEIGHT - COORDINATE DOOR AND DOOR FRAME WITH FIELD CONDITIONS - NOTIFY ARCHITECT OF ANY MODIFICATIONS DUE TO EXISTING CONDITIONS

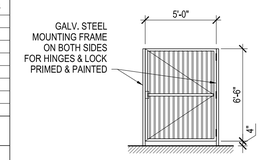

SWING GATE
GALV. STL. GATE w/ 2" SQ. FRAME & 1" SQ. STL. PICKETS SPACED @ 4" O.C.

VANDAL PROOF GATE FOR RESTROOM ENTRANCE

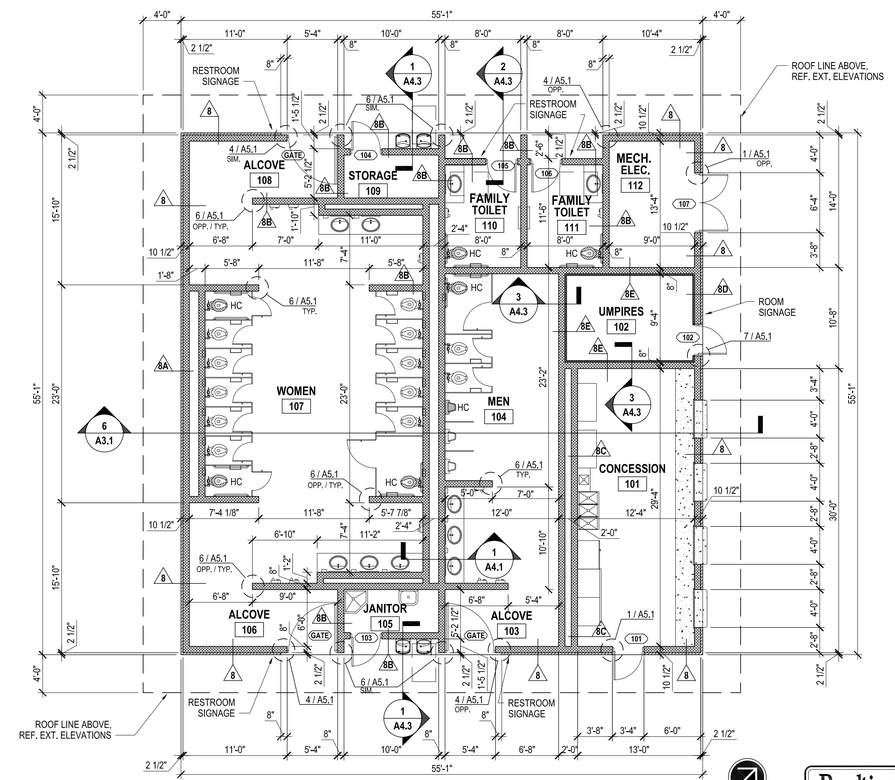

FLOOR PLAN (1)

SCALE: 1/8" = 1'-0"

Boultinghouse Simpson Gates ARCHITECTS
3301 NORTH McCOLL ROAD | McALLEN, TEXAS 78501 | 956-630-0494

CITY OF McALLEN
SOFTBALL FIELD FACILITIES
MUNICIPAL PARK
McALLEN, TEXAS

McALLEN Parks & Recreation

HALFF
5000 WEST MILITARY HWY. SUITE 100
McALLEN, TX 78503
TEL (956) 682-0286
FAX (956) 684-0282
TBPE FIRM #F-312

Revision No.	Date	Description

REGISTERED ARCHITECT ROBERT S. SIMPSON 8355-0 TEXAS
07-11-2018

100% CONSTRUCTION DOCUMENTS

Project No.:	33348.001
Issued:	07/11/2018
Drawn By:	G.Q.
Checked By:	B.S.
Scale:	AS SHOWN
Sheet Title	FLOOR PLAN & REFLECTED CLG. PLAN
Sheet Number	A2.1

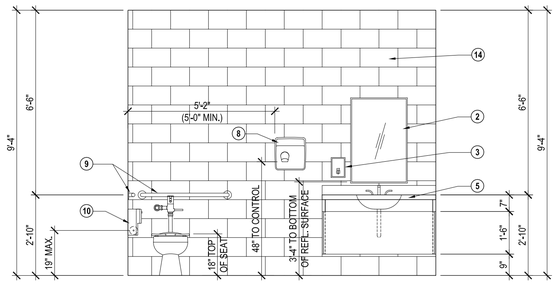

FAMILY TOILETS - 110 & 111 (OPP.) INTERIOR ELEVATION (4)

SCALE: 3/8" = 1'-0"

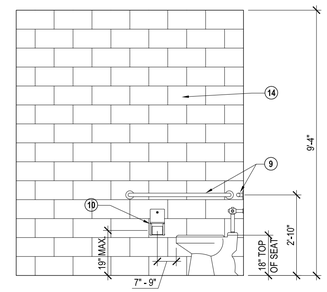

FAMILY TOILETS - 110 & 111 (OPP.) INTERIOR ELEVATION (3)

SCALE: 3/8" = 1'-0"

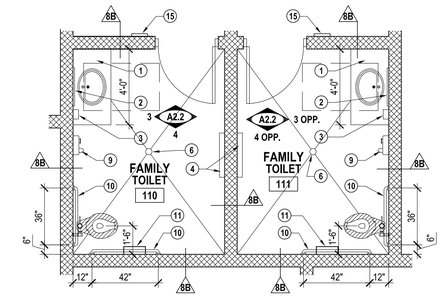

ENLARGED FAMILY TOILET PLAN (2)

SCALE: 1/4" = 1'-0"

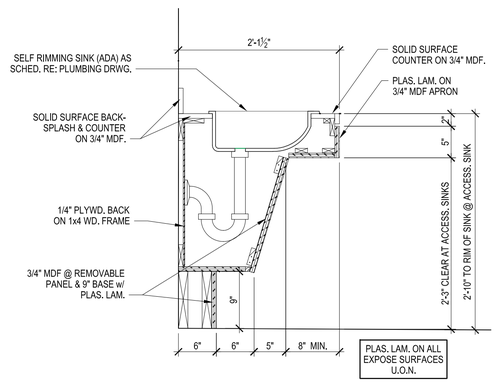

TYP. MILLWORK COUNTER @ RESTROOMS (5)

SCALE: 1" = 1'-0"

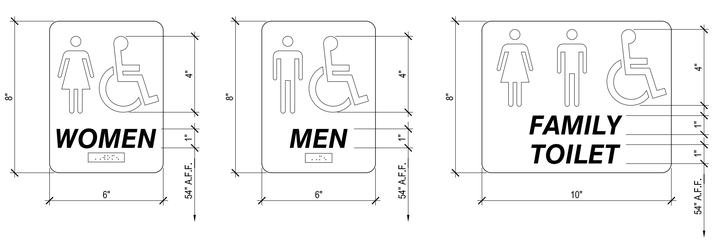

ADA COMPLIANCE RESTROOM SIGNAGE (6)

NO SCALE:

FLOOR PLAN KEY NOTES

1	SOLID SURFACE COUNTERTOP, NOSING & 4" BACK-SPLASH AS SPECIFIED REF. TYP. MILLWORK SECTION: 5 / A2.2
2	WALL-MOUNTED MIRROR - BOBRICK B-165 2436 OR EQUAL - PROVIDE BOBRICK B-293 2436 AT HC DESIGNATED LAVATORY
3	WALL-MOUNTED SOAP DISPENSER - BOBRICK B-40 OR EQUAL
4	WALL-MOUNTED BABY CHANGING STATION - KOALA KARE KB101-01 OR EQUAL
5	SELF RIMMING HAND SINK, REFER TO MEP
6	FLOOR DRAIN, REFER TO MEP
7	OVERHEAD BRACED SOLID PHENOLIC TOILET PARTITIONS - BOBRICK DURALINE SERIES 1182 OR EQUAL
8	WALL HUNG SOLID PHENOLIC URINAL SCREEN - BOBRICK DURALINE SERIES 1085 OR EQUAL
9	ADA COMPLIANT WALL-MOUNTED HAND DRYER - BOBRICK B-7128 OR EQUAL
10	ADA COMPLIANT GRAB BARS - BOBRICK B-6806 x 36 OR EQUAL BOBRICK B-6806 x 42 OR EQUAL
11	TOILET PAPER DISPENSER - BOBRICK B-2888 OR EQUAL
12	RECESSED SANITARY NAPKIN DISPOSAL - BOBRICK B-353 OR EQUAL
13	HAT AND COAT HOOK - BOBRICK B-682 OR EQUAL - MOUNT AT 48" A.F.F. MAX
14	ALL INTERIOR SMOOTH-FACED CMU WALLS TO BE SEALED & PAINTED
15	ADA COMPLIANCE RESTROOM SIGNAGE
16	30" x 30" STAINLESS STEEL ATTIC ACCESS PANEL w/ FLANGE & LOCK, REF. SECTION: 3 / A2.1
17	24" x 24" STAINLESS STEEL ATTIC ACCESS PANEL w/ FLANGE & LOCK, REF. SECTION: 3 / A2.1

FLOOR PLAN WALL LEGEND

REINFORCED CMU - SEE STRUCTURAL - FINISHED AS SCHEDULED - BULLNOSE AT ALL OUTSIDE CORNERS

8 — 8" CMU - CAST STONE WAINSCOT w/ CAST STONE CAP & 8" CMU SPLIT-FACE ABOVE ON EXTERIOR FACE. SEALED & PAINTED ON INTERIOR FACE.

8A — 8" CMU - CAST STONE WAINSCOT w/ CAST STONE CAP & 8" CMU SPLIT-FACE ABOVE ON EXTERIOR FACE.

8B — 8" CMU - SEALED & PAINTED ON BOTH SIDES

8C — 8" CMU - SEALED & PAINTED ONE SIDE ONLY

8D — 8" CMU - CAST STONE WAINSCOT w/ CAST STONE CAP & 8" CMU SPLIT-FACE ABOVE ON EXTERIOR FACE. 5/8" DENSARMOR GYP. BD. (T.F.T.& PTD.) ON Z-FURRING STRIPS & 1 1/2" THERMAX SHEATHING RIGID INSULATION BD. ON INTERIOR FACE. REF. WALL SECTION: 3 / A4.3 SIM.

8E — 8" CMU - 5/8" DENSARMOR GYP. BD. (T.F.T.& PTD.) ON Z-FURRING STRIPS & 1 1/2" THERMAX SHEATHING RIGID INSULATION BD. SEALED & PAINTED OTHER SIDE. REF. WALL SECTION: 3 / A4.3

RANDOM PATTERN ASHLAR CAST STONE WAINSCOT

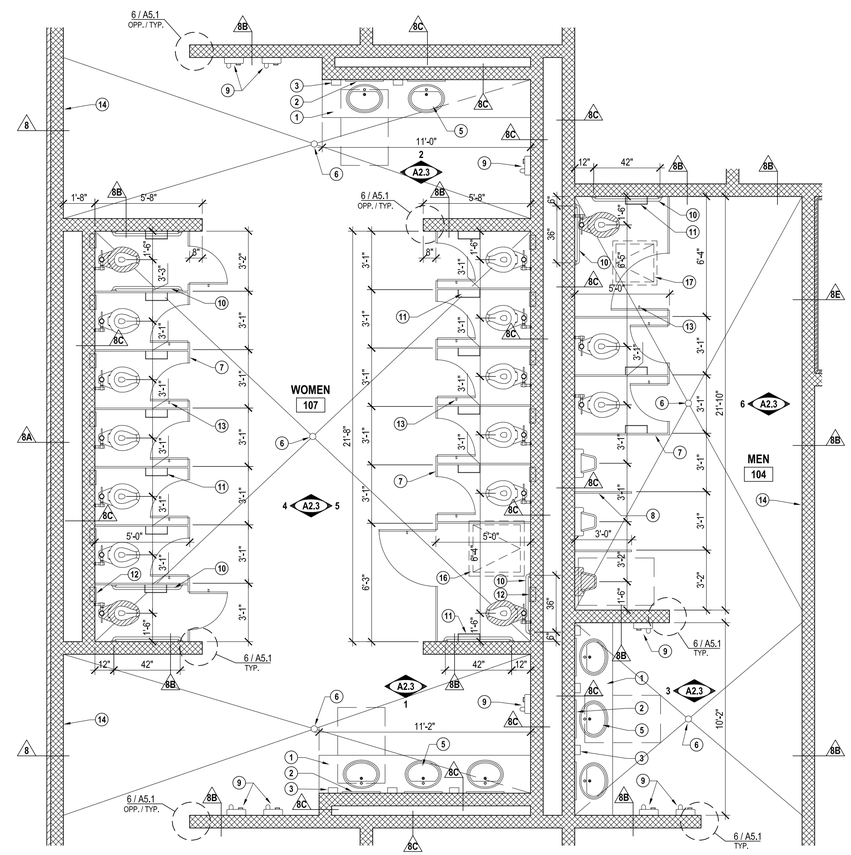

ENLARGED RESTROOM PLAN (1)

SCALE: 1/4" = 1'-0"

CITY OF McALLEN
SOFTBALL FIELD FACILITIES
MUNICIPAL PARK
McALLEN, TEXAS

McALLEN Parks & Recreation

HALFF
5000 WEST MILITARY HWY. SUITE 100
McALLEN, TX 78503
TEL (956) 682-0286
FAX (956) 684-0282
TBPE FIRM #F-312

Revision		
No.	Date	Description

REGISTERED ARCHITECT ROBERT S. SIMPSON 8355 TEXAS
07-11-2018

100% CONSTRUCTION DOCUMENTS

Project No.:	33348.001
Issued:	07/11/2018
Drawn By:	G.Q.
Checked By:	B.S.
Scale:	AS SHOWN
Sheet Title	ENLARGED PLANS
Sheet Number	A2.2

Boultinghouse Simpson Gates ARCHITECTS
3301 NORTH McCOLL ROAD | McALLEN, TEXAS 78501 | 956-630-9494

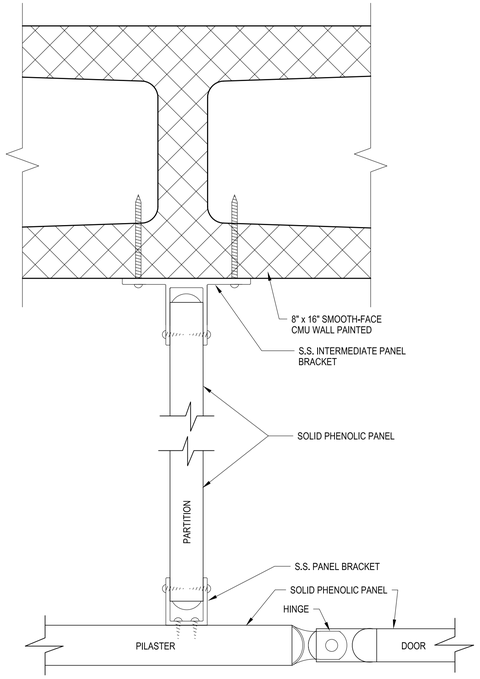

TOILET PARTITION - PLAN DETAIL (7)
NO SCALE:

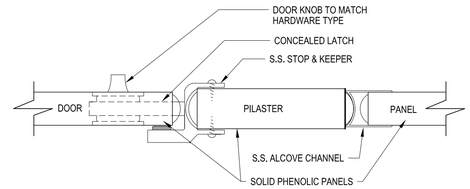

TOILET PARTITION - PLAN DETAIL (8)
NO SCALE:

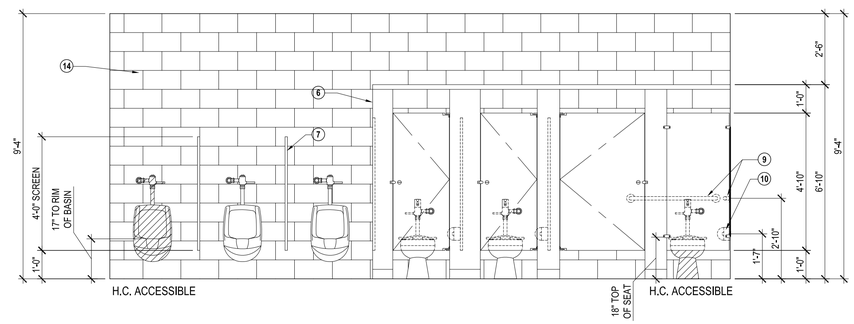

INTERIOR ELEVATION - MEN 104 (6)
SCALE: 3/8" = 1'-0"

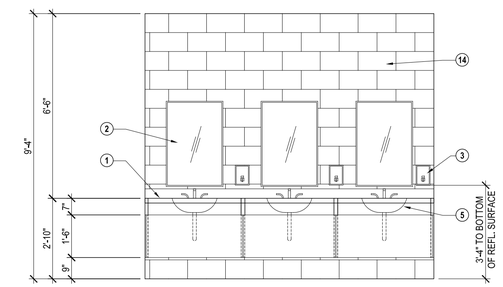

INTERIOR ELEVATION - MEN 104 (3)
SCALE: 3/8" = 1'-0"

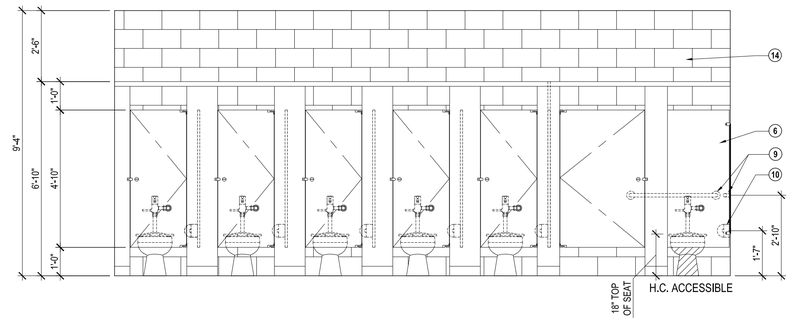

INTERIOR ELEVATION - WOMEN 107 (5)
SCALE: 3/8" = 1'-0"

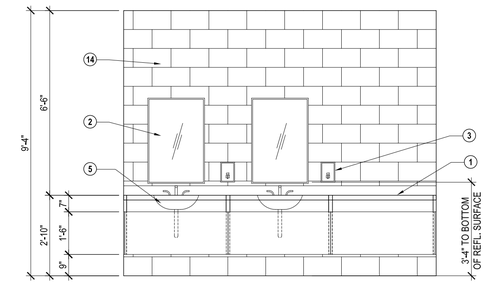

INTERIOR ELEVATION - WOMEN 107 (2)
SCALE: 3/8" = 1'-0"

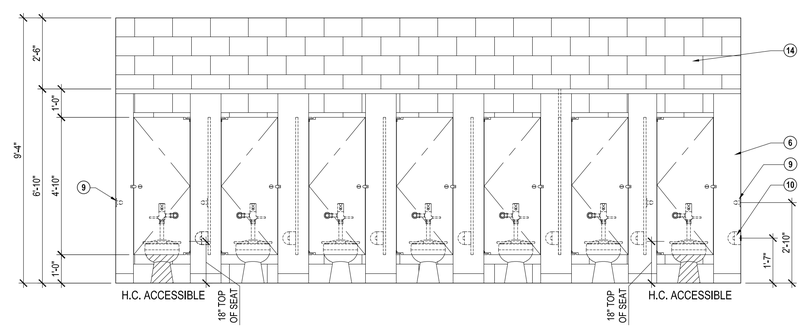

INTERIOR ELEVATION - WOMEN 107 (4)
SCALE: 3/8" = 1'-0"

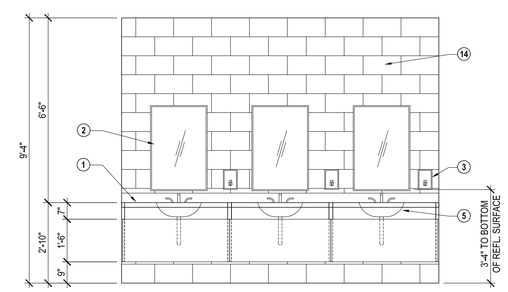

INTERIOR ELEVATION - WOMEN 107 (1)
SCALE: 3/8" = 1'-0"

FLOOR PLAN KEY NOTES

1	SOLID SURFACE COUNTERTOP, NOSING & 4" BACK-SPLASH AS SPECIFIED REF. TYP. MILLWORK SECTION: 5 / A2.2
2	WALL-MOUNTED MIRROR - BOBRICK B-165 2436 OR EQUAL - PROVIDE BOBRICK B-293 2436 AT HC DESIGNATED LAVATORY
3	WALL-MOUNTED SOAP DISPENSER - BOBRICK B-40 OR EQUAL
4	WALL-MOUNTED BABY CHANGING STATION - KOALA KARE KB101-01 OR EQUAL
5	SELF RIMMING HAND SINK, REFER TO MEP
6	FLOOR DRAIN, REFER TO MEP
7	OVERHEAD BRACED SOLID PHENOLIC TOILET PARTITIONS - BOBRICK DURALINE SERIES 1182 OR EQUAL
8	WALL HUNG SOLID PHENOLIC URINAL SCREEN - BOBRICK DURALINE SERIES 1085 OR EQUAL
9	ADA COMPLIANT WALL-MOUNTED HAND DRYER - BOBRICK B-7128 OR EQUAL
10	ADA COMPLIANT GRAB BARS - BOBRICK B-6806 x 36 OR EQUAL; BOBRICK B-6806 x 42 OR EQUAL
11	TOILET PAPER DISPENSER - BOBRICK B-2888 OR EQUAL
12	RECESSED SANITARY NAPKIN DISPOSAL - BOBRICK B-353 OR EQUAL
13	HAT AND COAT HOOK - BOBRICK B-682 OR EQUAL - MOUNT AT 48" A.F.F. MAX
14	ALL INTERIOR SMOOTH-FACE CMU WALLS TO BE SEALED & PAINTED
15	ADA COMPLIANCE RESTROOM SIGNAGE
16	30" x 30" STAINLESS STEEL ATTIC ACCESS PANEL w/ FLANGE & LOCK, REF. SECTION: 3 / A2.1

CITY OF McALLEN
SOFTBALL FIELD FACILITIES
MUNICIPAL PARK
McALLEN, TEXAS

McALLEN Parks & Recreation

HALFF
5000 WEST MILITARY HWY, SUITE 100
McALLEN, TX 78503
TEL (956) 682-0286
FAX (956) 684-0282
TBPE FIRM #F-312

Revision		
No.	Date	Description

REGISTERED ARCHITECT ROBERT S. SIMPSON 8355 TEXAS
07-11-2018

100% CONSTRUCTION DOCUMENTS

Project No.:	33348.001
Issued:	07/11/2018
Drawn By:	G.Q.
Checked By:	B.S.
Scale:	AS SHOWN
Sheet Title	INTERIOR ELEVATIONS
Sheet Number	A2.3

Boultinghouse Simpson Gates ARCHITECTS
3301 NORTH McCOLL ROAD | McALLEN, TEXAS 78501 | 956-630-9494

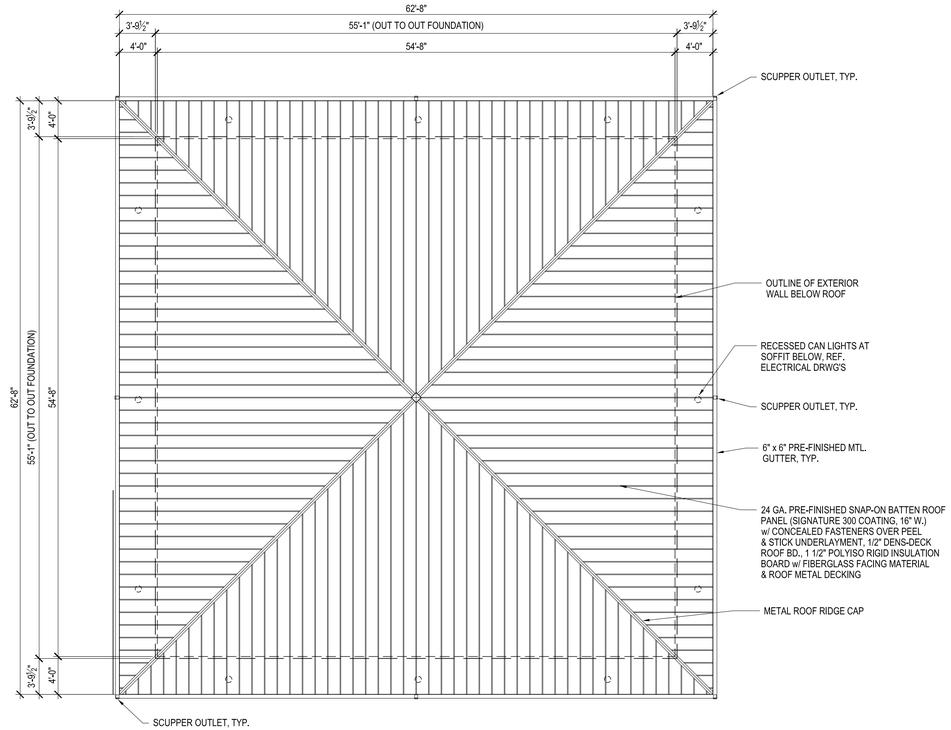

ROOF PLAN (5)
SCALE: 1/8" = 1'-0"

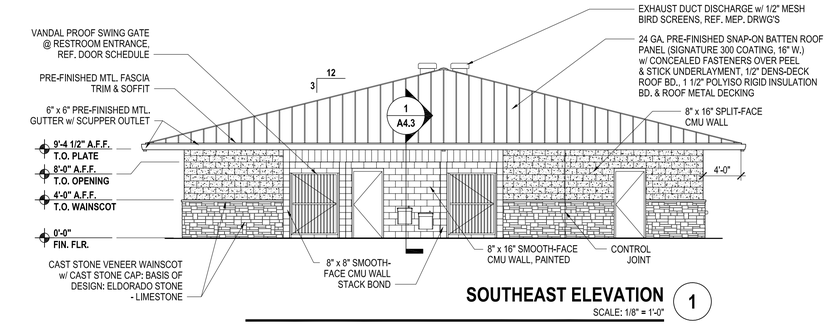

SOUTHEAST ELEVATION (1)
SCALE: 1/8" = 1'-0"

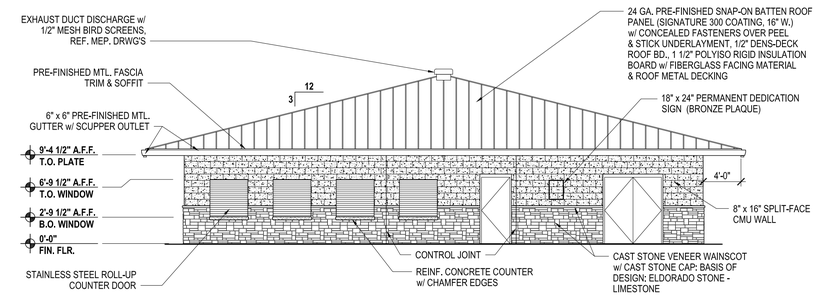

NORTHEAST ELEVATION (2)
SCALE: 1/8" = 1'-0"

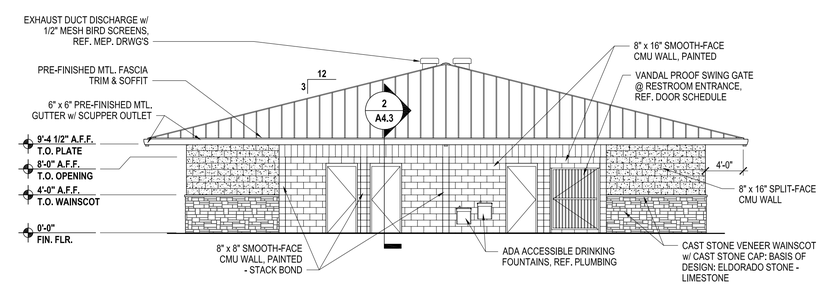

NORTHWEST ELEVATION (3)
SCALE: 1/8" = 1'-0"

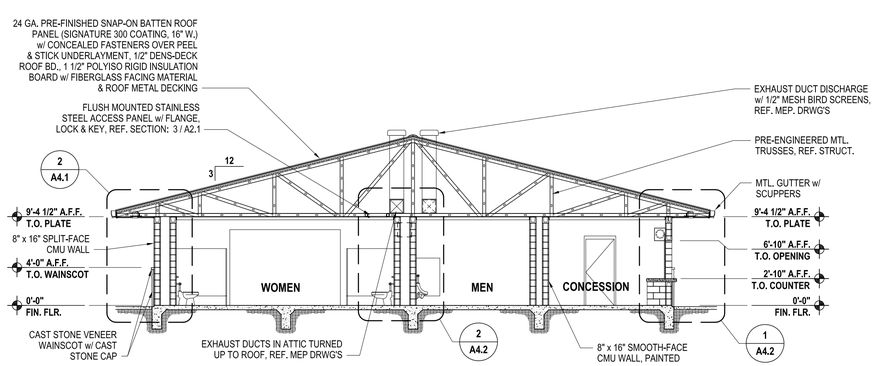

BUILDING SECTION (6)
SCALE: 1/8" = 1'-0"

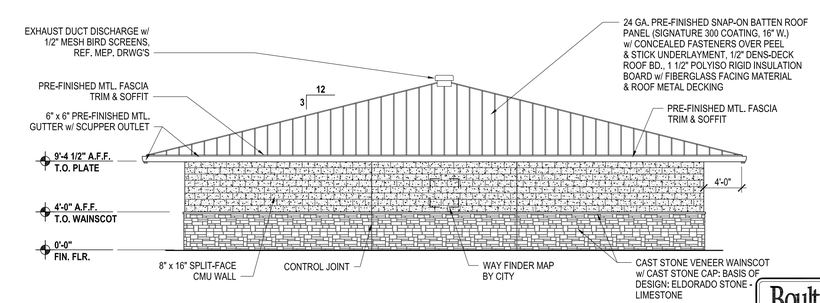

SOUTHWEST ELEVATION (4)
SCALE: 1/8" = 1'-0"

Boultinghouse Simpson Gates ARCHITECTS
3301 NORTH McCOLL ROAD | McALLEN, TEXAS 78501 | 956-630-9494

CITY OF McALLEN
SOFTBALL FIELD FACILITIES
MUNICIPAL PARK
McALLEN, TEXAS

McALLEN Parks & Recreation

HALFF
14800 ST. MARY'S LANE, SUITE 160
HOUSTON, TEXAS 77079-2943
TEL (281) 558-8700
FAX (281) 310-5259

Revision		
No.	Date	Description

REGISTERED ARCHITECT ROBERT S. SIMPSON 8355-0 TEXAS
07-11-2018

100% CONSTRUCTION DOCUMENTS

Project No.:	33348.001
Issued:	07/11/2018
Drawn By:	GQ
Checked By:	BS
Scale:	AS SHOWN
Sheet Title	EXT. ELEVATIONS & ROOF PLAN

A3.1
Sheet Number

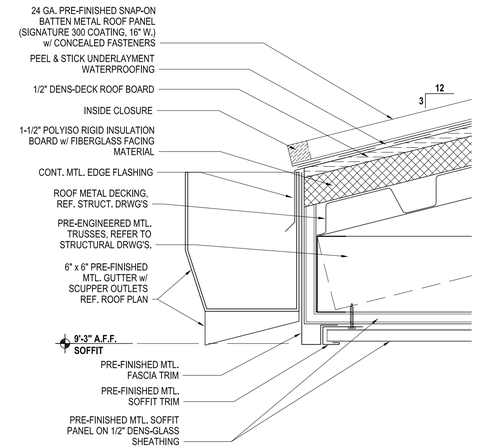

GUTTER DETAIL (4)

SCALE: 3" = 1'-0"

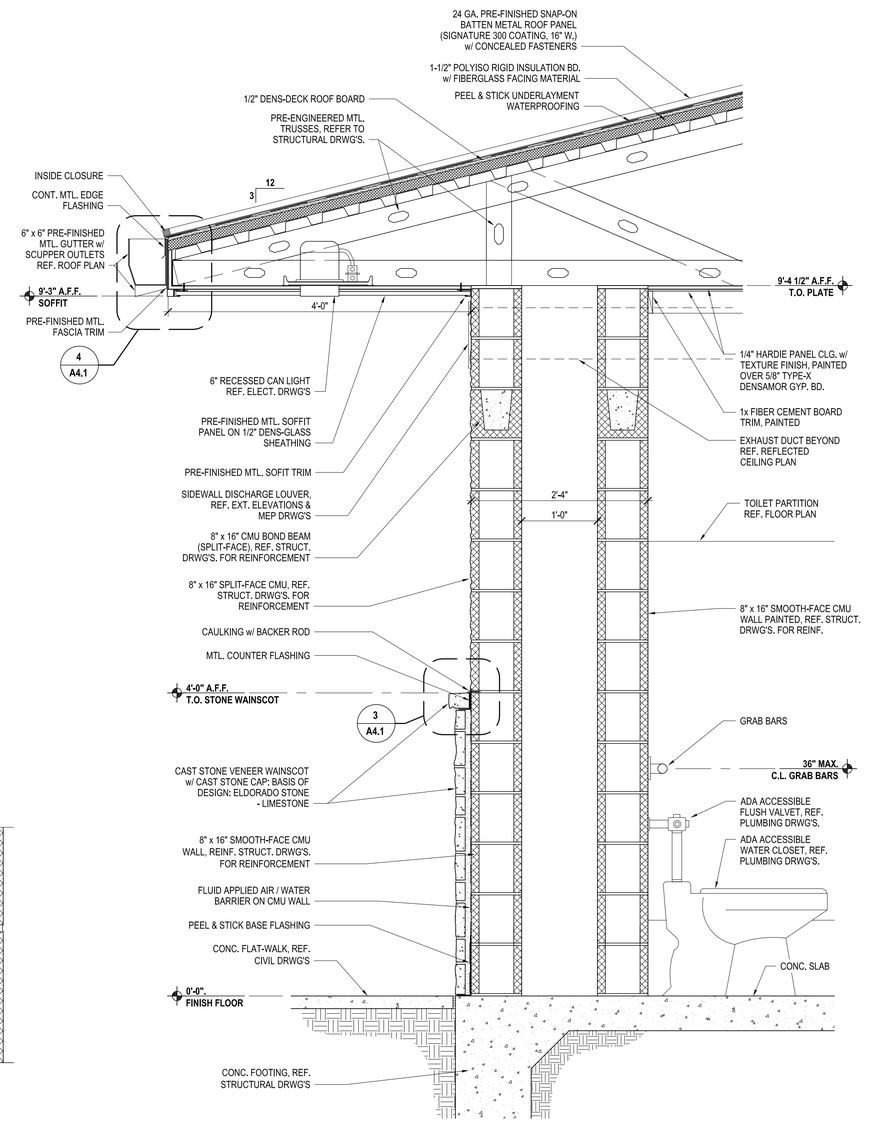

WALL SECTION (2)

SCALE: 1" = 1'-0"

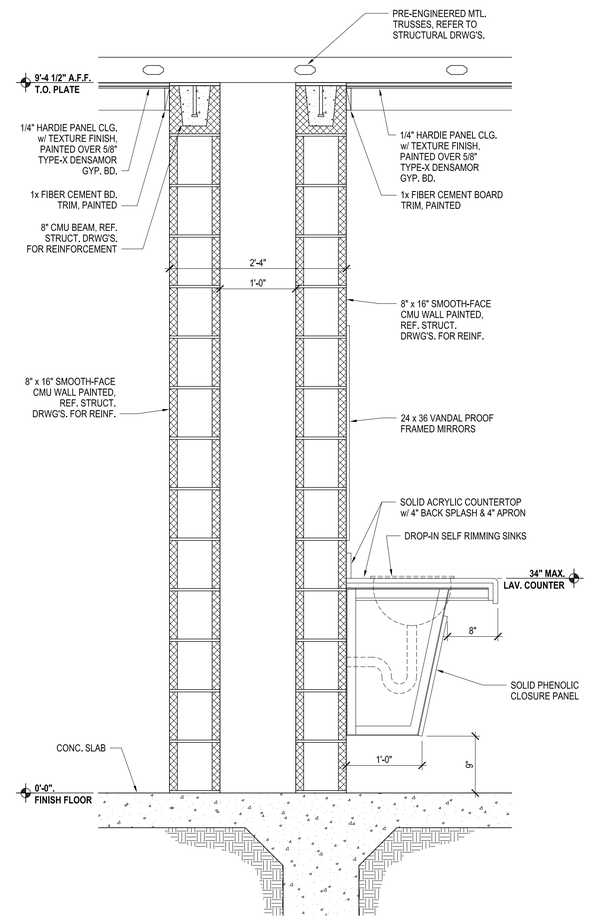

WALL SECTION (1)

SCALE: 1" = 1'-0"

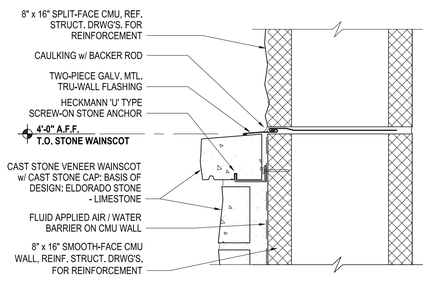

WALL DETAIL (3)

SCALE: 3" = 1'-0"

Boultinghouse Simpson Gates ARCHITECTS
3301 NORTH McCOLL ROAD | McALLEN, TEXAS 78501 | 956-630-9494

CITY OF McALLEN
SOFTBALL FIELD FACILITIES
MUNICIPAL PARK
McALLEN, TEXAS

McALLEN Parks & Recreation

HALFF
14800 ST. MARY'S LANE, SUITE 160
HOUSTON, TEXAS 77079-2943
TEL (281) 558-8700
FAX (281) 310-5259

Revision		
No.	Date	Description

REGISTERED ARCHITECT ROBERT S. SIMPSON 8355 TEXAS
07-11-2018

100% CONSTRUCTION DOCUMENTS

Project No.:	33348.001
Issued:	07/11/2018
Drawn By:	GQ
Checked By:	BS
Scale:	AS SHOWN

Sheet Title
WALL SECTIONS

A4.1
Sheet Number

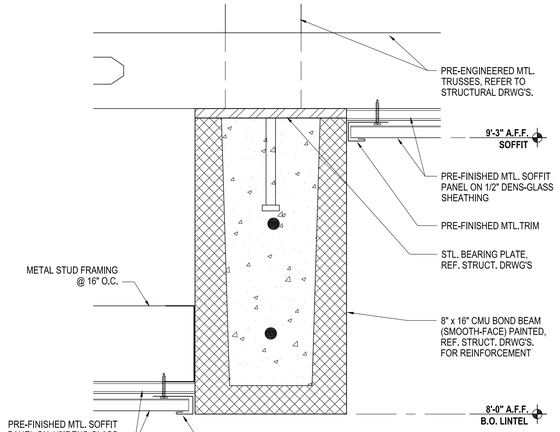

WALL DETAIL (3)
SCALE: 3" = 1'-0"

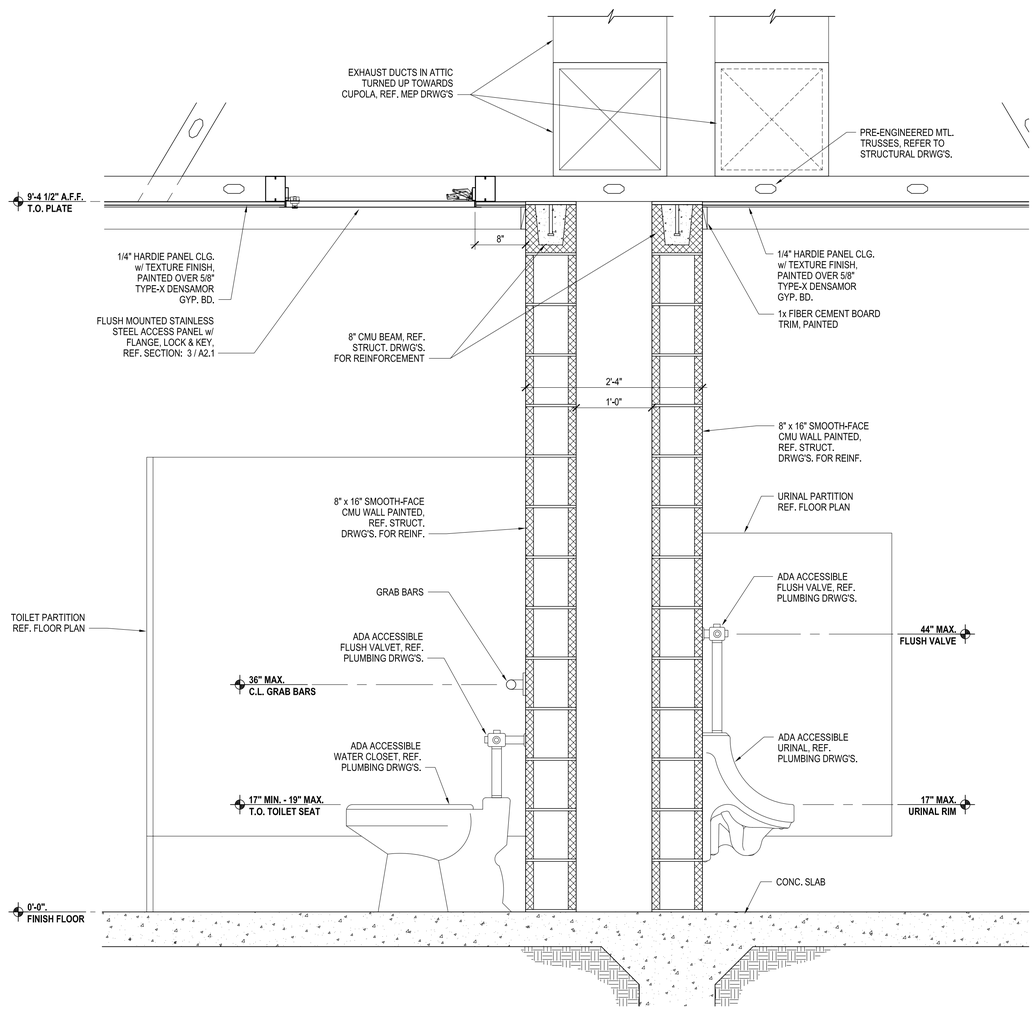

WALL SECTION (2)
SCALE: 1" = 1'-0"

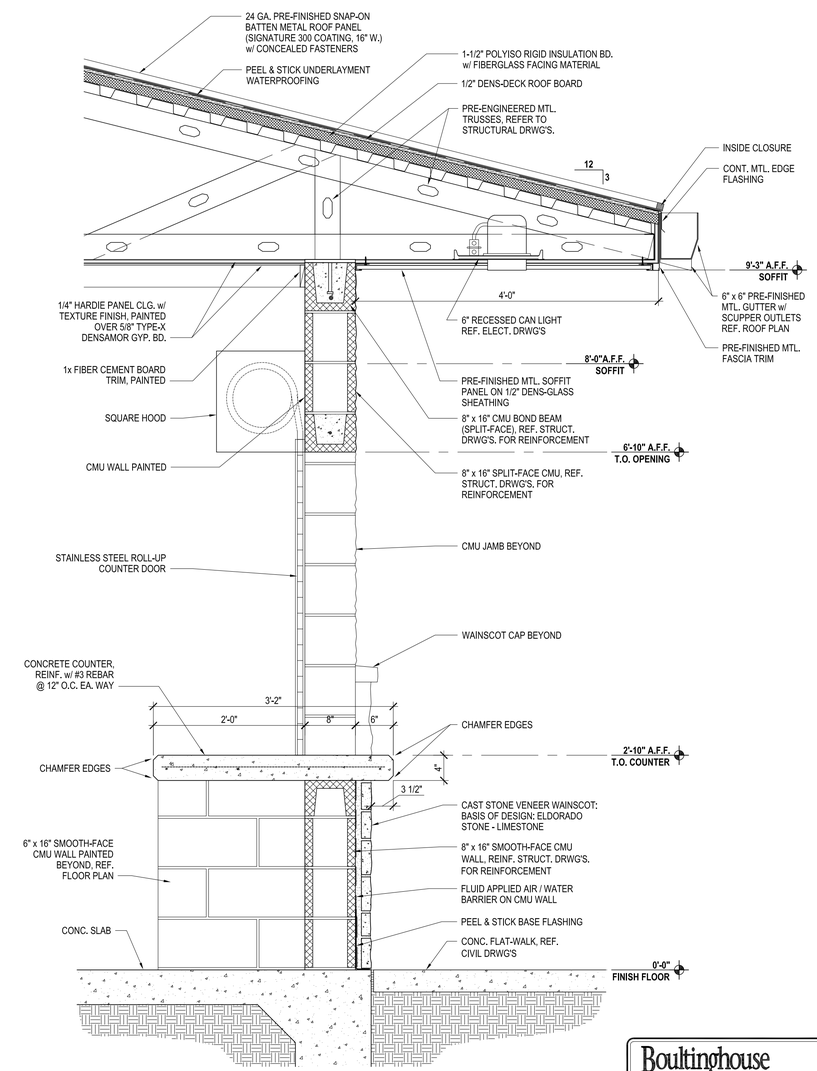

WALL SECTION (1)
SCALE: 1" = 1'-0"

CITY OF McALLEN
SOFTBALL FIELD FACILITIES
MUNICIPAL PARK
McALLEN, TEXAS

McALLEN Parks & Recreation

HALFF
14800 ST. MARY'S LANE, SUITE 160
HOUSTON, TEXAS 77079-2943
TEL (281) 558-8700
FAX (281) 310-5259

Revision		
No.	Date	Description

REGISTERED ARCHITECT ROBERT S. SIMPSON 8355 TEXAS
07-11-2018

100% CONSTRUCTION DOCUMENTS

Project No.:	33348.001
Issued:	07/11/2018
Drawn By:	GQ
Checked By:	BS
Scale:	AS SHOWN

Sheet Title
WALL SECTIONS

A4.2
Sheet Number

Boultinghouse Simpson Gates ARCHITECTS
3301 NORTH McCOLL ROAD | McALLEN, TEXAS 78501 | 956-630-9494

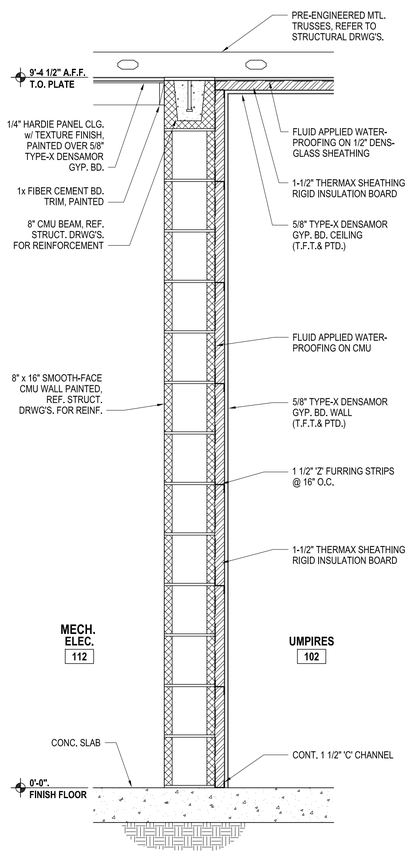

UMPIRES 102 WALL SECTION (3)
SCALE: 1" = 1'-0"

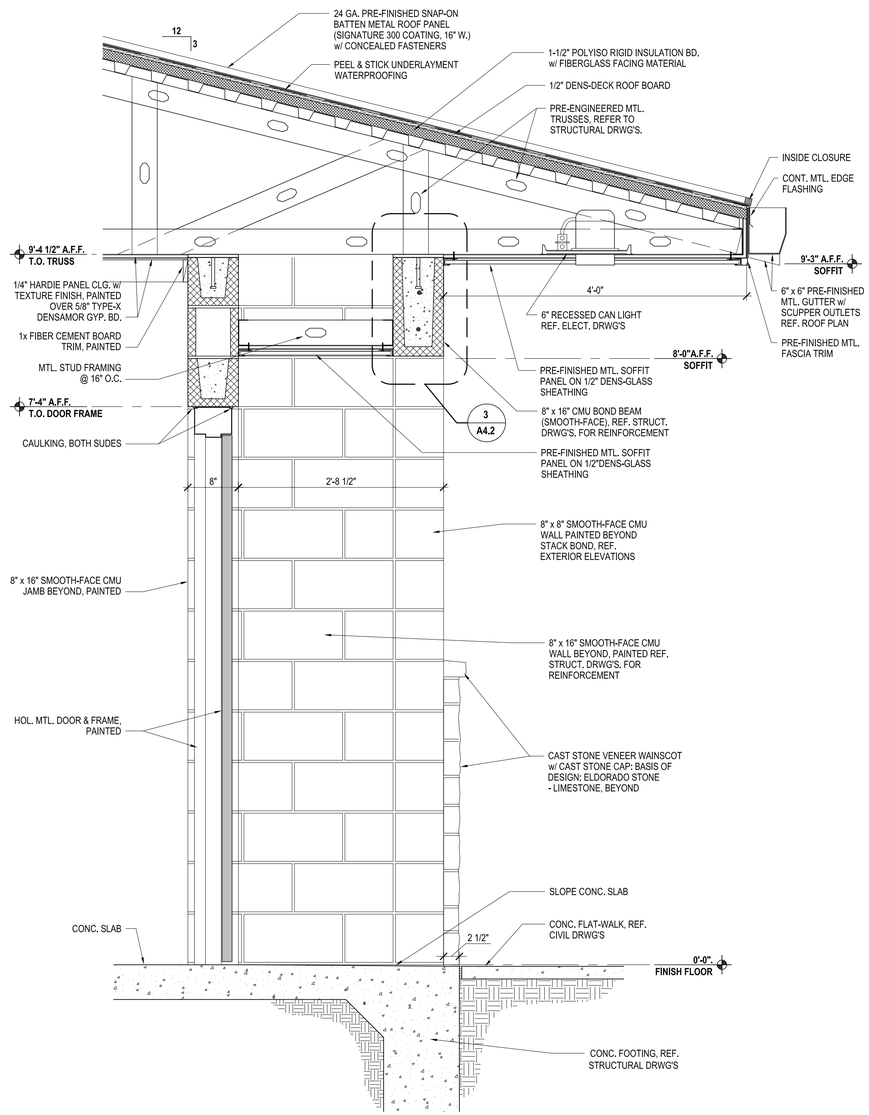

WALL SECTION (2)
SCALE: 1" = 1'-0"

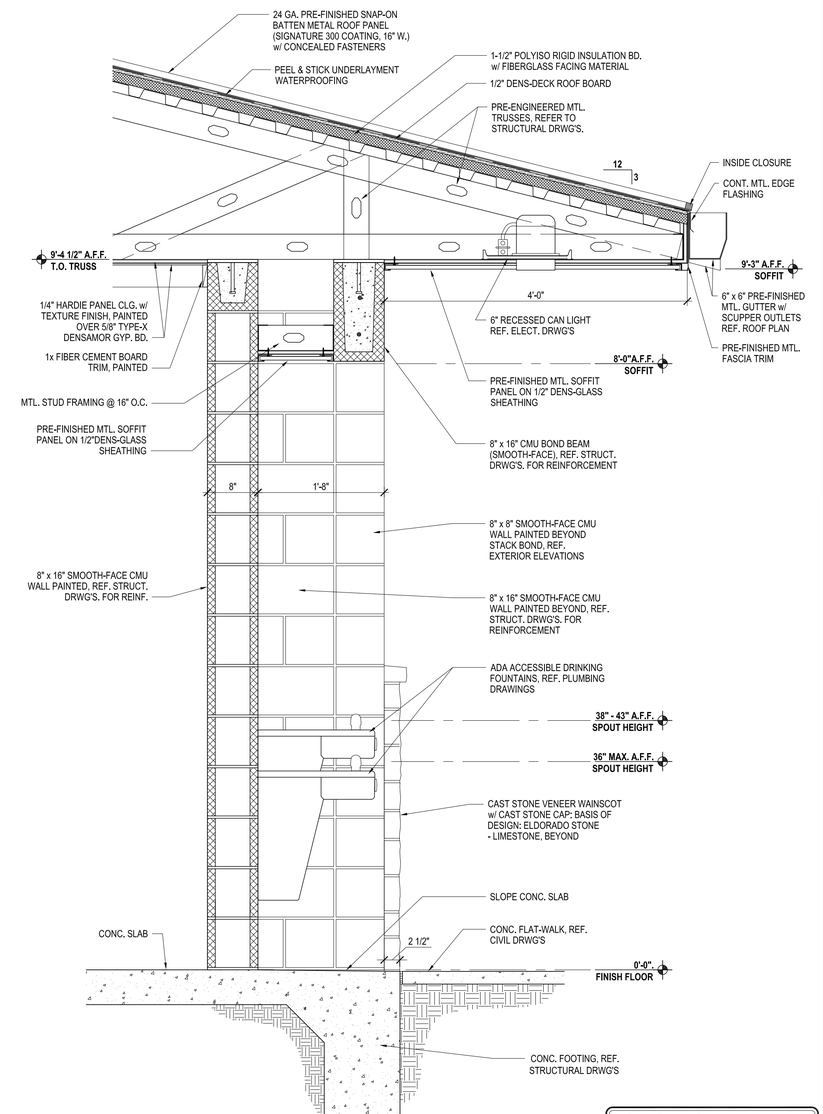

WALL SECTION (1)
SCALE: 1" = 1'-0"

Boultinghouse Simpson Gates ARCHITECTS
3301 NORTH McCOLL ROAD | McALLEN, TEXAS 78501 | 956-630-9494

CITY OF McALLEN
SOFTBALL FIELD FACILITIES
MUNICIPAL PARK
McALLEN, TEXAS

McALLEN Parks & Recreation

HALFF
14800 ST. MARY'S LANE, SUITE 160
HOUSTON, TEXAS 77079-2943
TEL (281) 558-8300
FAX (281) 310-5259

Revision		
No.	Date	Description

REGISTERED ARCHITECT ROBERT S. SIMPSON 8355 TEXAS
07-11-2018

100% CONSTRUCTION DOCUMENTS

Project No.:	33348.001
Issued:	07/11/2018
Drawn By:	GQ
Checked By:	BS
Scale:	AS SHOWN
Sheet Title	WALL SECTIONS
Sheet Number	A4.3

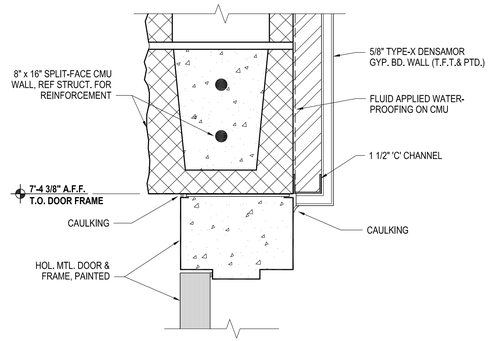

DOOR HEAD 9
SCALE: 3" = 1'-0"

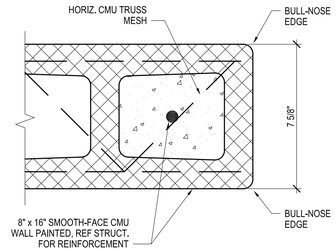

WALL DETAIL 6
SCALE: 3" = 1'-0"

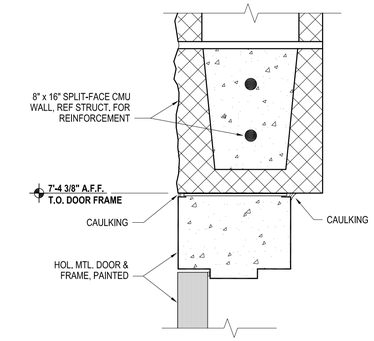

DOOR HEAD 3
SCALE: 3" = 1'-0"

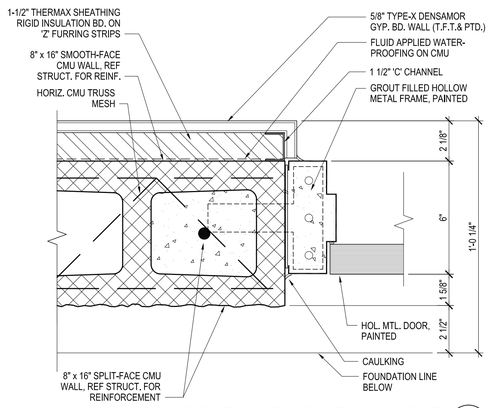

DOOR JAMB ABOVE WAINSCOT 8
SCALE: 3" = 1'-0"

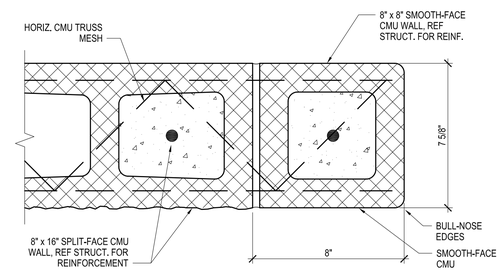

WALL DETAIL ABOVE WAINSCOT 5
SCALE: 3" = 1'-0"

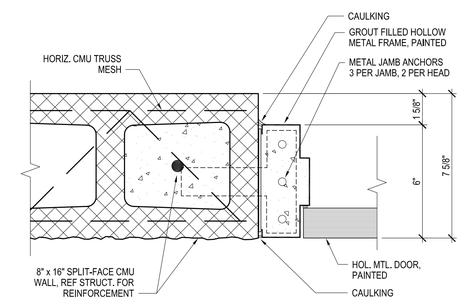

DOOR JAMB ABOVE WAINSCOT 2
SCALE: 3" = 1'-0"

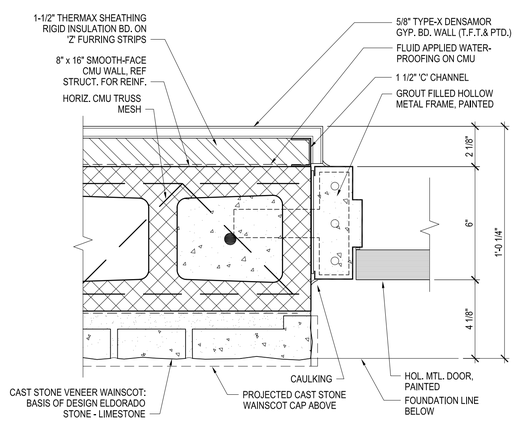

DOOR JAMB @ WAINSCOT 7
SCALE: 3" = 1'-0"

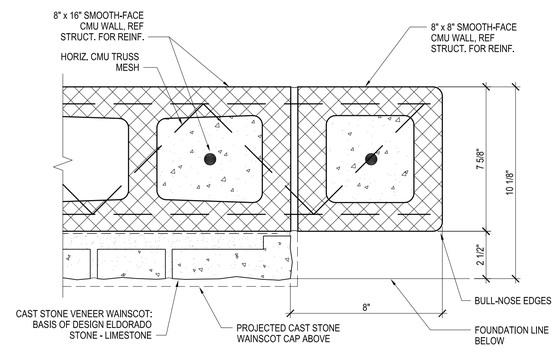

WALL DETAIL @ WAINSCOT 4
SCALE: 3" = 1'-0"

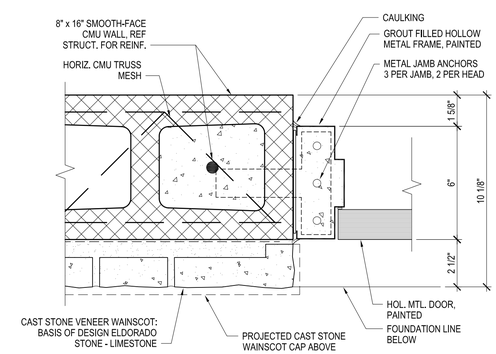

DOOR JAMB @ WAINSCOT 1
SCALE: 3" = 1'-0"

CITY OF McALLEN
SOFTBALL FIELD FACILITIES
MUNICIPAL PARK
McALLEN, TEXAS

McALLEN Parks & Recreation

HALFF
14800 ST. MARY'S LANE, SUITE 160
HOUSTON, TEXAS 77079-2943
TEL (281) 496-4400
FAX (281) 310-5259

Revision		
No.	Date	Description

REGISTERED ARCHITECT ROBERT S. SIMPSON 8355-0 TEXAS
07-11-2018

100% CONSTRUCTION DOCUMENTS

Project No.:	33348.001
Issued:	07/11/2018
Drawn By:	GQ
Checked By:	BS
Scale:	AS SHOWN
Sheet Title	WALL DETAILS
Sheet Number	A5.1

Boultinghouse Simpson Gates ARCHITECTS
3301 NORTH McCOLL ROAD | McALLEN, TEXAS 78501 | 956-630-9494

GENERAL NOTES

GENERAL

1. THE CONTRACT STRUCTURAL DRAWINGS AND SPECIFICATIONS REPRESENT THE FINISHED STRUCTURE. UNLESS OTHERWISE INDICATED, THEY DO NOT INDICATE THE METHOD OF CONSTRUCTION. THE CONTRACTOR SHALL PROVIDE ALL MEASURES NECESSARY TO PROTECT THE STRUCTURE, WORKMEN, AND OTHER PERSONS DURING CONSTRUCTION. SUCH MEASURES SHALL INCLUDE, BUT NOT BE LIMITED TO BRACING, SHORING FOR CONSTRUCTION EQUIPMENT, SHORING FOR THE BUILDING, SHORING FOR THE EARTH BANKS, FORMS, SCAFFOLDING, PLANNING, SAFETY NETS, SUPPORT AND BRACING FOR CRANES, GIN POLES, ETC. THE CONTRACTOR SHALL SUPERVISE AND DIRECT THE WORK, AND HE SHALL BE SOLELY RESPONSIBLE FOR ALL CONSTRUCTION MEANS, METHODS, TECHNIQUES, SEQUENCES, AND PROCEDURES. OBSERVATION VISITS TO THE SITE BY THE ARCHITECT OR THE ENGINEER SHALL NOT INCLUDE INSPECTION OF THE ABOVE ITEMS.

2. IT IS SOLELY THE CONTRACTOR'S RESPONSIBILITY TO FOLLOW ALL APPLICABLE SAFETY CODES AND REGULATIONS DURING ALL PHASES OF CONSTRUCTION.

3. EQUIPMENT FRAMING LOADS, OPENINGS AND STRUCTURE IN ANY WAY RELATED TO HVAC, PLUMBING, OR ELECTRICAL REQUIREMENTS ARE SHOWN FOR BIDDING PURPOSES ONLY. EXACT WEIGHTS AND LOCATIONS OF MECHANICAL EQUIPMENT SHALL BE COORDINATED BY CONTRACTOR. IF THE FINAL LOCATION VARIES FROM THAT SHOWN ON THE PLANS, CONTRACTOR TO NOTIFY ARCHITECT AND ENGINEER FOR APPROVAL BEFORE INSTALLATION.

4. SHOULD ANY OF THE DETAILED INSTRUCTIONS SHOWN ON THE PLANS CONFLICT WITH THESE STRUCTURAL NOTES, THE SPECIFICATIONS, OR WITH EACH OTHER, THE STRICTEST PROVISION SHALL GOVERN.

5. THE GENERAL CONTRACTOR SHALL VERIFY ALL DIMENSIONS AND CONDITIONS AT THE JOB SITE AND SHALL BE RESPONSIBLE FOR CONDITIONS OF ALL WORK AND MATERIALS.

6. THE CONTRACTOR SHALL REVIEW AND VERIFY ALL DIMENSIONS AND ELEVATIONS. CONTRACTOR SHALL REPORT ANY DISCREPANCIES IN WRITING TO THE ARCHITECT. ANY CONFLICT BETWEEN THE DRAWINGS AND SPECIFICATIONS OF THE VARIOUS TRADES INVOLVED SHALL BE REPORTED TO THE ARCHITECT AND ENGINEER.

7. DETAILS SHOWN ON DRAWINGS APPLY AT SIMILAR CONDITIONS.

8. ALL WORK SHALL BE DONE IN ACCORDANCE WITH LOCAL STANDARDS AND TO ALL APPLICABLE PROVISIONS OF THE GOVERNING BUILDING CODE.

9. THE ARCHITECT AND ENGINEER SHALL BE NOTIFIED IN WRITING WHEN WORK COMMENCES.

10. CONTRACTOR SUBSTITUTIONS: ANY MATERIALS OR PRODUCTS THAT ARE SUBMITTED FOR APPROVAL THAT ARE DIFFERENT FROM THE MATERIALS OR PRODUCTS SPECIFIED IN THE CONTRACT DOCUMENTS WILL ONLY BE CONSIDERED IF THE FOLLOWING CRITERIA ARE SATISFIED.
    - A) A COST SAVING TO THE OWNER IS DOCUMENTED AND SUBMITTED WITH THE REQUEST
    - B) THE MATERIAL OR PRODUCT HAS BEEN APPROVED BY THE INTERNATIONAL CONFERENCE OF BUILDING OFFICIALS (ICBO) AND THE ICBO REPORT IS SUBMITTED WITH THE REQUEST.

STRUCTURAL OBSERVATION

1. THE PROFESSIONAL ENGINEER OR HIS/HER AUTHORIZED REPRESENTATIVE SHALL CONDUCT ALL STRUCTURAL OBSERVATIONS. STRUCTURAL OBSERVATIONS SHALL BE FOR THE PURPOSE OF ASCERTAINING GENERAL COMPLIANCE WITH THE CONSTRUCTION DOCUMENTS. HOWEVER, SUCH OBSERVATION VISITS SHALL NOT RELIEVE THE CONTRACTOR FROM HIS OBLIGATIONS AND RESPONSIBILITIES TO THE CONSTRUCTION DOCUMENTS.

2. ITEMS THAT REQUIRE A STRUCTURAL OBSERVATION ARE AS FOLLOWS:
    - A. STEEL REINFORCEMENT IN SLAB OR FOUNDATION
    - B. FRAMING OF ROOF STRUCTURE BEFORE METAL DECK IS INSTALLED
    - C. EXTERIOR METAL DECK/PANEL INSTALLATION
    - D. CMU WALL REINFORCING BEFORE FILLING WITH GROUT

3. NOTIFY ENGINEER 24 HOURS IN ADVANCE WHEN A STRUCTURAL OBSERVATION IS REQUIRED.

4. WORK SHALL NOT CONTINUE AT THESE AREAS UNTIL OBSERVATION AND APPROVAL BY ENGINEER. FAILURE BY THE CONTRACTOR TO PROVIDE PROPER NOTICE FOR AN OBSERVATION VISIT AT THE REQUIRED TIME OR ADDITIONAL WORK PERFORMED WITHOUT AN OBSERVATION VISIT WILL BE DONE AT CONTRACTOR'S RISK AND MAY BE SUBJECT TO COMPLETE OR PARTIAL REMOVAL TO VERIFY COMPLIANCE OF PREVIOUS WORK.

SHOP DRAWINGS & SUBMITTALS

1. SUBMITTAL THAT WILL BE REQUIRED FOR APPROVAL INCLUDE:
    - A. CONCRETE MIX DESIGN
    - B. CURING COMPOUND FOR CONCRETE
    - C. REINFORCING STEEL (FOUNDATION AND MASONRY)
    - D. METAL STUD TRUSSES AND WALL STUDS (INCLUDING REACTIONS)
    - E. METAL DECKING/PANEL
    - F. CMU WALL COMPONENTS

2. ALLOW (2) WEEKS MINIMUM FOR REVIEW OF SHOP DRAWINGS.

3. PRIOR TO ISSUING THE SUBMITTALS TO THE ENGINEER, THE CONTRACTOR SHALL REVIEW THE SHOP DRAWINGS. CONTRACTOR MUST VERIFY ALL DIMENSION WITH ARCHITECTURAL PLANS.

4. REVIEW OF SHOP DRAWINGS BY THE ENGINEER IS FOR GENERAL CONFORMANCE TO THE STRUCTURAL DRAWINGS. APPROVAL OF THE SHOP DRAWINGS BY THE ENGINEER DOES NOT RELIEVE THE CONTRACTOR FOR ANY ERRORS IN DIMENSIONS OR MATERIAL INDICATED ON THE SHOP DRAWINGS.

CONTRACTOR NOTE

THE STRUCTURAL SYSTEM FOR THIS PROJECT SHALL NOT BE CONSTRUCTED BY USING THE STRUCTURAL DRAWINGS ALONE. THESE DRAWINGS WERE DEVELOPED FROM DATA DERIVED PRIMARILY FROM THE ARCHITECTURAL DRAWINGS AND SECONDARILY FROM MEP, CIVIL AND OTHER DISCIPLINES' DOCUMENTS. IT IS INTENDED THAT CONSTRUCTION PROCEED BY UTILIZING ALL OF THE INFORMATION CONTAINED IN THE ENTIRE SET OF CONSTRUCTION DOCUMENTS TAKEN AS A WHOLE; FAILURE TO DO SO WILL RESULT IN ERRORS WHICH SHALL BE CORRECTED AT THE CONTRACTOR'S EXPENSE.

© COPYRIGHT 2018 - ALL RIGHTS RESERVED

These drawings, as instruments of professional service, are the property of Chanin Engineering LLC for use solely with respect to this Project and shall not be reproduced for other purposes.

The Professional Engineer whose seal appears on the structural construction documents is the project Structural Engineer-of-Record (SER) who bears legal responsibility for the performance of the structural framing relating to the public health, safety and welfare. No other party, whether or not a Professional Engineer, may complete, correct, revise, delete or add to these construction documents or perform inspections of the work without the written permission of the SER.

DESIGN CRITERIA

1. DESIGN LOADS, STRUCTURAL ANALYSIS AND PREPARATION OF STRUCTURAL MEMBERS ARE BASED ON THE FOLLOWING CRITERIA:

2. CODE: ..... IBC 2012

3. VERTICAL LOADS
    - A. ROOF DEAD LOAD (BUILT-UP ROOF): ..... 25 PSF
    - B. ROOF LIVE LOAD(REDUCIBLE) : ..... 20 PSF
    - C. UPLIFT LOAD ..... SEE ROOF UPLIFT PLAN
    - D. MECHANICAL LOAD:
      THE GENERAL CONTRACTOR SHALL SUBMIT ACTUAL WEIGHTS AND LOCATIONS OF EQUIPMENT TO BE USED IN THE PROJECT TO THE STRUCTURAL ENGINEER FOR VERIFICATION OF LOADS USED IN THE DESIGN AT LEAST TWO WEEKS PRIOR TO FABRICATION AND CONSTRUCTION OF THE SUPPORTING STRUCTURE.

4. LATERAL LOADS
    - A. WIND SPEED (V-ULT): ..... 138 MPH
    - WIND SPEED (V-ASD) ..... 107 MPH
    - B. EXPOSURE CATEGORY: C
    - C. IMPORTANCE FACTOR: 1.0
    - D. BUILDING CATEGORY: III
    - E. SEISMIC DESIGN CATEGORY: ..... A
    - F. SITE CLASS: ..... D

5. GEOTECHNICAL ENGINEERING REPORT:
   PROVIDED BY: TERRACON
   PROJECT NUMBER: 88175150
   DATED: 9/18/17

   FOUNDATION DESIGN BASED ON THE FOLLOWING PARAMETERS
    - A. EFFECTIVE PI: 29
    - B. CLIMATIC RATING (CW): 15
    - C. MINIMUM BEAM DEPTH: ..... 24 IN
    - D. MINIMUM BEAM WIDTH: ..... 30 IN
    - E. ALLOWABLE BEARING CAPACITY (FOOTING) ..... 3000 PSF
    - F. EXISTING PVR: ..... 1 1/2 IN
    - G. PVR (CUT 12 IN FILL 18 IN) ..... 1 INCH

CONCRETE

1. ALL CONCRETE WORK SHALL BE EXECUTED IN ACCORDANCE WITH ACI 318 AND ACI 301 LATEST EDITION.

2. CEMENT SHALL CONFORM TO ASTM CI50 TYPE I AGGREGATE SHALL CONFORM TO ASTM C33.

3. CONCRETE SHALL HAVE A MINIMUM 28 DAYS COMPRESSIVE STRENGTH AS FOLLOWS:

MEMBER TYPE	STRENGTH	SLUMP	MAX AGG.
FOUNDATION	3000 PSI	4"-6"	1.5 IN.
PIERS	3000 PSI	4"-7"	1.5 IN.
C.I.P. BEAMS AND LINTELS	4000 PSI	4"-7"	.75 IN.

4. INSTALL 10 MIL VAPOR RETARDER UNDER SLABS ON GRADE AND ALONG SIDE OF TRENCHES IN ACCORDANCE WITH ASTM E1643. LAP JOINTS MINIMUM OF 12 INCHES.

5. PLACE CONCRETE CONTINUOUSLY BETWEEN PRE-DETERMINED EXPANSION AND CONSTRUCTION JOINTS.

6. ALL CONSTRUCTION JOINT LOCATIONS TO BE APPROVED BY ARCHITECT AND STRUCTURAL ENGINEER.

7. HORIZONTAL CONSTRUCTION JOINTS SHALL NOT BE PERMITTED.

8. CURE CONCRETE IN ACCORDANCE WITH ACI 308.1

9. REFER TO ARCHITECTURAL AND MECHANICAL PLANS FOR LOCATIONS OF ALL DEPRESSIONS, OPENINGS, ACCESSORIES, ETC.

10. CONDUIT AND PLUMBING LINES SHALL BE PLACED BELOW SLAB REINFORCING AND SHALL BE NO BIGGER THAN 1 INCH.

11. FLYASH MAY BE USED TO REPLACE A PORTION OF THE PORTLAND CEMENT. THE RATIO OF FLYASH TO THE TOTAL OF THE FLYASH AND CEMENT IN A MIX SHALL NOT EXCEED 20%. FLYASH SHALL CONFORM TO ASTM C618, TYPE C OR F.

12. ALL FLOORS SHALL BE CONSTRUCTED WITH A MINIMUM FLATNESS FF = 35 AND A MINIMUM LEVELNESS OF FL=25

13. TESTING OF CONCRETE SHALL BE DONE AS FOLLOWS:
    1) SETS SHALL CONSIST OF 5 CYLINDERS
       TWO TESTED AT 7 DAYS
       TWO TESTED AT 28 DAYS
    2) ONE SET SHALL BE TAKEN FOR EACH 150 CY AND FOR EVERY 5000 SF OF SURFACE AREA AND AT LEAST ONCE PER DAY OF POURING
    3) A MINIMUM OF 3 SETS SHALL BE TAKEN FOR EACH CLASS OF CONCRETE

14. NO WATER SHALL BE ADDED TO THE CONCRETE AT THE JOBSITE. IT SHALL BE THE RESPONSIBILITY OF THE CONTRACTOR TO COORDINATE WITH THE CONCRETE SUPPLIER TO ENSURE A PUMPABLE AND WORKABLE MIX WITHOUT THE ADDITION OF WATER AT THE JOBSITE. THE USE OF PLASTICIZERS, RETARDANTS AND OTHER ADDITIVES SHALL BE AT THE OPTION OF THE CONTRACTOR SUBJECT TO THE APPROVAL OF THE STRUCTURAL ENGINEER. FOLLOW THE RECOMMENDATIONS OF THE MANUFACTURER FOR THE PROPER USE OF ADDITIVES. THE USE OF CALCIUM CHLORIDE OR OTHER CHLORIDE BEARING SALTS SHALL NOT BE PERMITTED.

15. PLACE CONCRETE IN A MANNER SO AS TO PREVENT SEGREGATION OF THE MIX. DELAY FLOATING AND TROWELING OPERATIONS UNTIL CONCRETE HAS LOST SURFACE WATER SHEEN OR ALL FREE WATER. DO NOT SPRINKLE FREE CEMENT ON THE SLAB SURFACE. FINISHING OF SLAB SURFACES SHALL COMPLY WITH THE RECOMMENDATIONS OF AC1 302.1 AND 304.

16. UNLESS SPECIFIED, CONCRETE MUST REACH THE FOLLOWING PERCENTAGES OF ITS 28-DAY COMPRESSIVE STRENGTH (F'c), BEFORE FORMS MAY BE REMOVED.

    WALL, COLUMNS, & BEAM SIDES.....40%
    JOIST PANS & BEAM BOTTOMS (IF RESHORED).....70%
    SHORING FOR FLOOR SYSTEMS (IF NOT RESHORED).....85%

17. NO CONCRETE SHALL BE PLACED OUTSIDE OF THESE SPECIFICATIONS WITHOUT THE OWNER'S PRIOR APPROVAL. ANY ITEMS NOT IN COMPLIANCE WITH THE OUTLINED SPECIFICATION SHALL BE REPORTED TO THE OWNER AND STRUCTURAL ENGINEER WITHIN 24 HOURS.

18. CONSTRUCTION VEHICLE LOADS SHALL NOT BE PERMITTED ON ELEVATED SLABS AT ANY TIME.

19. ALL RETAINING WALLS TO BE SHORED UNTIL UPPER SLAB IS IN PLACE AND HAS REACHED 70% OF ITS DESIGN STRENGTH OR THE RETAINING WALL HAS REACHED 100% OF ITS DESIGN STRENGTH. PROVIDE GRANULAR BACKFILL AND PERFORATED DRAIN PIPE CONNECTED TO SITE DRAINAGE, RE: CIVIL PLAN.

STEEL REINFORCING

1. ALL REINFORCEMENT SHALL BE NEW BILLET STEEL CONFORMING TO ASTM A-615 GRADE 60.

2. REINFORCING STEEL SHALL BE DESIGNED, DETAILED, FABRICATED AND PLACED IN ACCORDANCE WITH THE LATEST ACI DETAILING MANUAL (SP-66) AND CSRI MANUAL OF STANDARD PRACTICE FOR DETAILING REINFORCED CONCRETE, (ACI #315) LATEST EDITIONS.

3. BARS SCHEDULED OR DETAILED "CONT" SHALL BE SPLICED ONLY WHEN UNAVOIDABLE AT POINTS OF MINIMUM STRESS AND WITH A MINIMUM LAP AS FOLLOWS:
    - A. HORIZONTAL BARS w/ MORE THAN 12" OF FRESH CONCRETE CAST BELOW LAPS.
      - #6 BARS AND SMALLER - 57 BAR DIAMETERS
      - #7 BARS AND BIGGER - 72 BAR DIAMETERS
    - B. OTHER BARS
      - #6 BARS AND SMALLER - 44 BAR DIAMETERS
      - #7 BARS AND BIGGER - 55 BAR DIAMETERS
    - C. ALL SPLICES TO BE STAGGERED A MINIMUM OF 4'-0". TOP BAR AND BOTTOM BAR SPLICES TO BE LOCATED AT MID-SPAN AND WITHIN 1/3 SPAN RESPECTIVELY.

4. CORNER REINFORCING BARS SHALL BE USED AT ALL CORNERS AND INTERSECTIONS.

5. EXTEND THE SLAB REINFORCING STEEL PERPENDICULAR TO EXTERIOR GRADE BEAM TO THE TOP OUT SIDE REINFORCING BAR OF BEAM.

6. SPACE REINFORCING BARS WITH MINIMUM CLEAR SPACING IN ACCORDANCE WITH ACI 318 OF ONE BAR DIAMETER, BUT NOT LESS THAN 1 INCH. FOR COMPRESSION MEMBERS, SPACE AT A MINIMUM OF 1.5 INCHES OR 1.5 BAR DIAMETERS, WHICHEVER IS GREATER.

7. WHERE REINFORCING BARS ARE PLACED IN MULTIPLE LAYERS, PLACE UPPER BARS DIRECTLY ABOVE LOWER BARS.

8. MAINTAIN CONCRETE COVER AROUND REINFORCEMENT IN ACCORDANCE WITH ACI 318 AND AS FOLLOWS:
    - A. FOOTING AND CONCRETE CAST AGAINST EARTH - 3 INCHES
    - B. EXPOSED TO EARTH OR WEATHER
      - #6 BARS AND BIGGER - 2 INCHES
      - #5 BARS AND SMALLER - 1.5 INCHES
    - C. BEAMS AND COLUMNS - 1.5 INCHES
    - D. SLABS AND WALLS - 1 INCH

9. REPAIR ANY DAMAGE TO VAPOR RETARDER PER MANUFACTURER SPECIFICATIONS.

10. ADDITIONAL REINFORCING TO BE PROVIDED ON SITE FOR USE AS DIRECTED BY STRUCTURAL ENGINEER.
    - #4 BARS - 100 FT.
    - #5 BARS - 100 FT.
    - #6 BARS - 100 FT.

COLD ROLLED STEEL SPECIFICATIONS (SSMA)

1. ALL STUDS, JOISTS, ROOF TRUSSES AND ACCESSORIES SHALL BE OF THE TYPE, SIZE, GAUGE AND SPACING AS REQUIRED BY A TEXAS REGISTERED PROFESSIONAL ENGINEER.

2. ALL STRUCTURAL MEMBERS AND CONNECTIONS SHALL BE DESIGNED IN ACCORDANCE WITH AMERICAN IRON AND STEEL INSTITUTE (AISI) "SPECIFICATION FOR THE DESIGN OF COLD FORMED STEEL STRUCTURAL MEMBERS". LATEST EDITION.

3. ALL STUDS, RUNNERS, JOIST AND TRUSSES SHALL BE FORMED FROM GALVANIZED STEEL, CORRESPONDING TO THE REQUIREMENTS OF ASTM A446, WITH A MINIMUM YIELD STRENGTH OF 50 KSI FOR .097, .068, .054 THICK MEMBERS AND 33 KSI FOR.043 AND .033 THICK MEMBERS AND FLAT STRAP BRACING.

4. PRIOR TO FABRICATION THE CONTRACTOR SHALL SUBMIT SIGNED AND SEALED ERECTION DRAWINGS AND STRUCTURAL CALCULATIONS TO THE STRUCTURAL ENGINEER FOR APPROVAL.

5. ALL FRAMING COMPONENTS SHALL BE CUT SQUARELY FOR ATTACHMENT TO PERPENDICULAR MEMBERS OR, AS REQUIRED, FOR AN ANGULAR FIT AGAINST ABUTTING MEMBERS.

6. AXIALLY LOADED STUDS SHALL BE INSTALLED IN A MANNER WHICH WILL ASSURE THAT THEIR ENDS ARE POSITIONED AGAINST THE INSIDE OF TRACK WEB PRIOR TO FASTENING.

7. FASTENING OF COMPONENTS SHALL BE WITH SELF-DRILLING SCREWS OR WELDS. SCREWS OR WELDS SHALL BE OF SUFFICIENT SIZE TO INSURE THE STRENGTH OF THE CONNECTION. WIRE TYING OF COMPONENTS SHALL NOT BE PERMITTED. ALL WELDS SHALL BE TOUCHED-UP WITH A ZINC-RICH PAINT.

8. RUNNERS SHALL BE SECURELY ANCHORED TO THE SUPPORTING STRUCTURE. PROPOSED CONNECTION TO BE SUBMITTED FOR APPROVAL.

9. ABUTTING LENGTHS OF TRACK SHALL EACH BE SECURELY ANCHORED TO A COMMON STRUCTURAL ELEMENT, BUTT-WELDED, OR SPLICED.

10. STUDS SHALL BE PLUMB, ALIGNED AND SECURELY ATTACHED TO FLANGES OF BOTH UPPER AND LOWER TRACKS.

11. JACK STUDS OR CRIPPLES SHALL BE INSTALLED BELOW WINDOW SILLS, ABOVE WINDOW AND DOOR HEADERS, AND WHERE NEEDED TO FURNISH SUPPORT, AND SHALL BE SECURELY ATTACHED TO CONNECTING MEMBERS.

12. RESISTANCE TO MINOR AXIS BENDING AND ROTATION SHALL BE PROVIDED BY GYPSUM BOARD OR GYPSUM SHEATHING AND BY HORIZONTAL STRAP AND BLOCKING OR COLD-ROLLED CHANNEL BRACING AT THIRD POINTS.

13. SPLICES IN AXIALLY LOADED STUDS SHALL NOT BE PERMITTED.

14. PROVIDE A MINIMUM OF (3) #12 SCREWS FOR ALL STUD TO STUD CONNECTIONS.

15. BRIDGING SHALL BE INSTALLED IMMEDIATELY AFTER JOISTS ARE ERECTED AND BEFORE CONSTRUCTION LOADS ARE APPLIED TO PREVENT FLANGE ROTATION AND TO SUPPORT FLANGES IN COMPRESSION.

16 BRIDGING SHALL CONSIST OF SOLID BLOCKING PLUS STRAP BRACING OR 1 1/2" COLD-ROLLED CHANNELS SCREW-ATTACHED OR WELDED TO BOTTOM JOIST FLANGES. BRIDGING SHALL BE INSTALLED AT MID SPAN FOR SPANS 16'-0" OR LESS AND AT 8'-0" O.C. MAX. FOR SPANS GREATER THAN 16'-0" U.N.O.

17. SOLID BLOCKING, OF FIELD-CUT TRACK OR JOIST SECTION, SHALL BE PROVIDED, WELDED OR SCREW-ATTACHED BETWEEN OUTER JOIST, OVER ALL INTERIOR SUPPORTS AND ADJACENT TO OPENINGS AT 10'-0" O.C. MAX. COLD-ROLLED CHANNELS OR STRAP BRACING OF 1 1/2" x 33 MIL. (0.033") CORROSION-RESISTANT STEEL SHALL BE SCREW-ATTACHED TO BOTTOM JOIST FLANGE BETWEEN SOLID BLOCKING. REFERENCE MANUFACTURER INSTALLATION INSTRUCTIONS.

18. DEFLECTION FOR WALL TRUSSES SHALL BE HELD TO L/600 FOR EXTERIOR BRICK, L/360 FOR EXTERIOR STUCCO, AND L/240 FOR EXTERIOR SIDING OR EIFS.

19. DEFLECTION OF ROOF TRUSSES SHALL BE HELD TO L/360.

CHANIN ENGINEERING, LLC
TBPE FIRM REG. NUMBER F-9369
PH: (956) 687-9421
FAX: (956) 687-3211
400 Nolana, Suite H2
McAllen, Texas 78504
www.chaninengineering.com

MASONRY

1. MATERIALS:
    - A. CONCRETE BLOCK: MEDIUM WEIGHT ASTM C90 (HOLLOW) ASTM C145 (SOLID) MINIMUM COMPRESSIVE STRENGTH: 1900 PSI
    - B. MORTAR: ASTM C270 TYPE S.
    - C. GROUT: MINIMUM COMPRESSIVE STRENGTH: 2000 PSI
    - D. NET AREA COMPRESSIVE STRENGTH: 1500 PSI TO BE TESTED IN ACCORDANCE TO ATSM C1314 STANDARDS.
    - E. JOINT REINFORCING: MILL GALVANIZED FINISH, 9 GAGE MINIMUM SIDE WIRES AND CROSS WIRES (DUR-O-WALL). A HOHMANN + BARNARD COMPANY.
    - F. BAR REINFORCING: ASTM A615, GRADE 60 (UNLESS NOTED OTHERWISE).
    - G. TYPICAL CMU WALL REINFORCING SHALL BE #5 (V) AT 48" O.C. AND #5 (H) AT 8'-0" O.C. U.N.O. ON DRAWINGS.

2. REINFORCED MASONRY, WHERE VERTICAL BARS ARE TO BE GROUTED INTO CORES, THE FOLLOWING REQUIREMENTS APPLY:
    - A. PROVIDE DOWELS FROM WALL, SAME SIZE AND SPACING AS WALL BARS. LAP 48 BAR DIAMETERS MINIMUM WITH WALL BAR.
    - B. PROVIDE A CONTINUOUS VERTICAL CAVITY, AT LEAST 2" x 3" IN SIZE, FREE OF MORTAR DROPPINGS.
    - C. PROVIDE REBAR ALIGNMENT DEVICES AT A MAXIMUM SPACING OF 96 BAR DIAMETERS (MINIMUM OF 2 PER BAR).
    - D. AT SPLICES IN VERTICAL BARS, PROVIDE MECHANICAL COUPLERS OR 48 BAR DIAMETER LAP.
    - E. ALL REINFORCEMENT MUST BE INSTALLED AND SECURELY ANCHORED IN PLACE PRIOR TO PLACEMENT OF GROUT.
    - F. MAXIMUM HEIGHT OF GROUT LIFT = 4'-0'. UNLESS HIGH LIFT GROUTING PROCEDURES ARE EMPLOYED IN ACCORDANCE WITH ASI 530-99

3. MISCELLANEOUS:
    - A. FILL CORE SOLID AROUND ANCHOR BOLTS.
    - B. PROVIDE SOLIDLY FILLED HOLLOW BLOCKS AT ALL EMBED ANCHOR LOCATIONS.
    - C. SET WELD PLATES IN BOND BEAMS AFTER THE GROUT IS PLACED, BUT WHILE IT IS STILL PLASTIC.
    - D. HOLLOW MASONRY UNITS TO BE LAID WITH FULL MORTAR COVERAGE ON HORIZONTAL AND VERTICAL FACE SHELLS. WEBS SHALL ALSO BE BEDDED IN ALL COURSES OF PIERS, COLUMNS, AND PILASTERS, AND IN THE STARTING COURSE ON FOOTING, AND WHEN ADJACENT TO CELLS OR CAVITIES TO BE REINFORCED OR FILLED WITH CONCRETE OR GROUT. SOLID UNITS TO BE LAID WITH FULL HEAD AND BED JOINTS.
    - E. PROVIDE JOINT REINFORCING AT 16 INCHES, EXCEPT AS NOTED.
    - F. LAP JOINT REINFORCING 6 INCHES FOR STANDARD, 15 INCHES FOR HEAVY WEIGHT.
    - G. VERTICAL CONTROL JOINTS SHALL BE PROVIDED FULL HEIGHT OF MASONRY WALLS AS LOCATED ON THE DRAWINGS. THE JOINT SHALL BE PROVIDED AS A CONTINUOUS HEAD JOINT WITH MORTAR RAKED BACK 3/4" AT BOTH FACES AND 50% OF THE HORIZONTAL JOINT REINFORCING CUT AT THE JOINT. AFTER THE MORTAR IS SET, THE JOINT SHALL BE CAULKED.
    - H. FILL ALL VOIDS AND CELLS WITHIN 12" EITHER SIDE OF CENTERLINE OF BEAM AND/OR COLUMN BEARING LOCATIONS WITH A #4 REINFORCING BAR AND GROUT U.N.O.
    - I. ALL CMU WALLS MUST HAVE SPECIAL INSPECTION PER IBC CODE 2012 SECTION 1705.4 "MASONRY CONSTRUCTION" ON CHAPTER 17-"STRUCTURAL TEST & SPECIAL INSPECTION". THE CONTRACTOR MUST PROVIDE REPORTS OF THESE "SPECIAL INSPECTIONS".
    - J. BARS SCHEDULED "CONTINUOUS" SHALL BE SPLICED AS FOLLOWS:

REINFORCING BAR SIZE	MIN. LAP SPLICE LENGTH
#5	30"
#6	36"
#7	42"
#8	48"
#9	54"
#10	MECHANICAL CONNECTOR
#11	

4. STABILITY AND BRACING:
   ALL MASONRY WALLS SHOWN ON THE CONTRACT DRAWINGS HAVE BEEN DESIGNED TO RESIST THE REQUIRED CODE VERTICAL AND LATERAL FORCES APPLIED TO THEM IN THEIR FINAL CONSTRUCTED POSITION ONLY ASSUMING FULL BRACING AT TOP, BOTTOM, AND/OR SIDES AS INDICATED. IT IS THE RESPONSIBILITY OF THE CONTRACTOR TO ENSURE THAT CONSTRUCTION RESIST ANY ERECTION VERTICAL OR LATERAL LOADS THAT COULD BE IMPOSED ON THE WALLS PRIOR TO CONSTRUCTION COMPLETION.

5. TESTING:
    - A. TESTING FREQUENCY: ONE SET OF SPECIFIED TESTS FOR EVERY 5,000 SF OF COMPLETED WALL AREA.
    - B. TESTING OF MORTAR MIX: IN ACCORDANCE WITH ASTM C780 FOR AGGREGATE RATIO AND WATER CONTENT, AIR CONTENT, CONSISTENCY, AND COMPREHENSIVE STRENGTH.
    - C. TESTING OF GROUT MIX: IN ACCORDANCE WITH ASTM C1019 FOR COMPREHENSIVE STRENGTH, AND IN ACCORDANCE WITH ASTM C143/C143M FOR SLUMP.
    - D. TEST COMPREHENSIVE STRENGTH OF MORTAR AND MASONRY TO ASTM C1314: TEST IN ACCORDANCE WITH MASONRY UNIT SECTIONS SPECIFIED.

6. GENERAL CONTRACTOR SHALL HOLD A PRE-CONSTRUCTION MEETING WITH STRUCTURAL ENGINEER AND MASONRY CONTRACTOR BEFORE MASONRY WORK COMMENCES.

METAL ROOF DECK

1. SHEET STEEL: ASTM A653 GRADE 33 STRUCTURAL QUALITY WITH G90 GALVANIZED COATING CONFORMING TO ASTM A525

2. DECK PROFILE - B
   PROFILE DEPTH - 1.5 IN.
   GAGE - 22

3. METAL DECK ATTACHMENT SHALL BE:
   AT SUPPORTS: #12 TEK SCREWS AT A 36/5 PATTERN
   AT SIDELAPS: #10 TEK SCREWS, 4 PER SPAN

4. WELDING OF METAL DECKING SHALL NOT BE ALLOWED

5. ALL METAL DECK PANELS SHALL SPAN ACROSS A MINIMUM OF FOUR JOISTS OR BEAMS

6. DECK ENDS SHALL BE LAPPED OVER SUPPORTS

CITY OF McALLEN
SOFTBALL FIELD FACILITIES
MUNICIPAL PARK
McALLEN, TEXAS

McALLEN Parks & Recreation

HALFF
14800 ST. MARY'S LANE, SUITE 160
HOUSTON, TEXAS 77079-2943
TEL (281) 496-4200
FAX (281) 310-5259

Revision		
No.	Date	Description

STATE OF TEXAS
MIGUEL CHANIN
93127
LICENSED
PROFESSIONAL ENGINEER
7-11-18

100% CONSTRUCTION DOCUMENTS

Project No.:	17325
Issued:	07/11/2018
Drawn By:	LR
Checked By:	MC
Scale:	AS SHOWN

Sheet Title
GENERAL NOTES

S1.00
Sheet Number

GENERAL NOTES

CHANIN
ENGINEERING, LLC
TBPE FIRM REG. NUMBER F-9369
PH: (956) 687-9421
FAX: (956) 687-3211
400 Nolana, Suite H2
McAllen, Texas 78504
www.chaninengineering.com

DRILLED CONCRETE PIERS

1. CONSTRUCTION PROCEDURES TO FOLLOW ACI 336.1 AND ACI 336.3R
2. PIERS NOT SPECIFICALLY DIMENSIONED ON THE PLAN SHALL BE CENTERED UNDERNEATH COLUMN OR GRADE BEAM, AS OCCURS.
3. PIERS SHALL BE DRILLED PLUMB ALONG ENTIRE LENGTH. MAXIMUM ALLOWED DEVIATION FROM POSITION AT TOP OF SHAFT IS 1" PER 10' OF DEPTH.
4. CLEAN SHAFT AND BOTTOM OF LOOSE MATERIAL. MAINTAIN SHAFTS FREE OF WATER PRIOR TO PLACING CONCRETE.
5. ELEVATION OF TOP OF PIERS IS A THE BOTTOM OF THE DEEPEST INTERSECTING BEAM, COLUMN, OR WALL SUPPORTED AT THE PIER, UNLESS NOTED OTHERWISE.
6. REINFORCING STEEL CAGE SHALL BE HELD IN PLACE BY A MINIMUM OF 3 SETS OF SPACERS AT A MAXIMUM SPACING OF 8 FT. ALONG THE ENTIRE DEPTH OF THE PIER AND AT 3" FROM THE BOTTOM.
7. CONTRACTOR TO VERIFY DEPTH OF PIER BEFORE REINFORCING STEEL IS CUT. PIER STEEL SHALL BE DELIVERED TO SITE IN STANDARD LENGTHS AND CUT AS REQUIRED. PROVIDE 75 BAR DIAMETER LAPS WHEN NEEDED.
8. PIER REINFORCING AND CONCRETE SHALL BE PLACED IMMEDIATELY AFTER DRILLING OPERATIONS ARE COMPLETE.
9. UNDER NO CONDITIONS SHALL A PIER BE DRILLED THAT CANNOT BE POURED THE SAME DAY.
10. CONTRACTOR TO COORDINATE WITH GEOTECHNICAL ENGINEER FOR INSPECTION AND VERIFICATION OF PIERS IN ORDER TO ENSURE BEARING IN CORRECT SOIL STRATUM AS RECOMMENDED IN PROJECT GEOTECHNICAL REPORT.
11. TEMPORARY STEEL CASING MAY BE REQUIRED DURING DRILLING OPERATIONS. ANY SEEPAGE WATER SHALL BE REMOVED FROM PIER HOLES PRIOR TO POURING CONCRETE.
12. STEEL CASING SHALL BE CONTINUOUSLY JOINED AND SHALL BE OF SUFFICIENT STRENGTH AND RIGIDITY TO WITHSTAND HANDLING STRESS, DRILLING STRESSES, CONCRETE PRESSURES, AND SURROUNDING EARTH AND WATER PRESSURES AND TO PERMIT ADVANCEMENT OF THE PIER THROUGH CAVING GROUND.
13. SIZE AND LENGTH OF CASING SHALL BE SUBMITTED TO THE GEOTECHNICAL ENGINEER FOR ACCEPTANCE.
14. PLACE CONCRETE IN PIER IN ONE CONTINUOUS OPERATION WITHOUT CESSATION FROM BOTTOM OF PIER TO TOP.
15. TESTING OF CONCRETE SHALL BE AT THE RATE OF ONE SET OF FIRE (5) CYLINDERS PER PIER BUT NOT MORE THAN ONE SET PER TRUCKLOAD.
16. CONTRACTOR SHALL MAKE ACCURATE RECORDS OF THE DRILLED PIER LOCATIONS, DEPTHS, BEARING STRATUM, DEPTH OF PENETRATION INTO BEARING STRATUM AND DIAMETER AND SHALL SUBMIT THIS INFORMATION TO ENGINEER.
17. MINIMUM VERTICAL REINFORCING TO BE 1% OF CROSS-SECTIONAL AREA OF PIER, WITH MINIMUM OF SIX (6) BARS, AND #3 SPIRAL, UNLESS NOTED OTHERWISE.

STRUCTURAL TESTS AND SPECIAL INSPECTION

1. THE OWNER SHALL EMPLOY A SPECIAL INSPECTOR TO PROVIDE INSPECTIONS DURING CONSTRUCTION ON THE TYPES OF WORK LISTED IN THIS SECTION.
2. THE FOLLOWING TERMS AND PHRASES SHALL HAVE THE MEANINGS SHOWN BELOW AS IT PERTAINS TO THIS SECTION,
   A. APPROVED AGENCY - AN ESTABLISHED AND RECOGNIZED AGENCY REGULARLY ENGAGED IN CONDUCTING AND FURNISHING SPECIAL INSPECTION SERVICES.
   B. APPROVED FABRICATOR - AN ESTABLISHED AND QUALIFIED FIRM APPROVED BY BUILDING OFFICIAL. SPECIAL INSPECTIONS ARE NOT REQUIRED WHEN WORK IS PERFORMED ON THE PREMISES OF AN APPROVED FABRICATOR.
   C. SPECIAL INSPECTION, CONTINUOUS - THE FULL TIME OBSERVATION OF WORK REQUIRING SPECIAL INSPECTION.
   D. SPECIAL INSPECTION, PERIODIC - THE PART TIME OR INTERMITTENT OBSERVATION OF WORK REQUIRING SPECIAL INSPECTION.
3. SPECIAL INSPECTORS SHALL KEEP RECORDS OF ALL INSPECTIONS AND SHALL FURNISH REPORTS TO THE BUILDING OFFICIAL AND TO THE REGISTERED DESIGN PROFESSIONAL IN RESPONSIBLE CHARGE. DISCREPANCIES SHALL BE BROUGHT TO THE IMMEDIATE ATTENTION OF THE CONTRACTOR FOR CORRECTION. IF THE DISCREPANCIES ARE NOT CORRECTED THEY SHALL BE BROUGHT TO THE ATTENTION OF THE REGISTERED DESIGN PROFESSIONAL IN RESPONSIBLE CHARGE.
4. THE FOLLOWING ITEMS REQUIRE SPECIAL INSPECTION.
5. SPECIAL INSPECTION FOR STRUCTURAL STEEL SHALL BE IN ACCORDANCE WITH THE QUALITY ASSURANCE INSPECTION REQUIREMENTS OF AISC 360.

TABLE 1705.3
REQUIRED VERIFICATION AND INSPECTION OF CONCRETE CONSTRUCTION

VERIFICATION AND INSPECTION	CONTINUOUS	PERIODIC	REFERENCED STANDARD[a]	IBC REFERENCE
1. INSPECTION OF REINFORCING STEEL, INCLUDING PRESTRESSING TENDONS, AND PLACEMENT.	—	X	ACI 318: 3.5, 7.1-7.7	1910.4
2. INSPECTION OF REINFORCING STEEL WELDING IN ACCORDANCE WITH TABLE 1705.2.2, ITEM 2b.	—	—	AWS D1.4 ACI 318: 3.5.2	—
3. INSPECTION OF ANCHORS CAST IN CONCRETE WHERE ALLOWABLE LOADS HAVE BEEN INCREASED OR WHERE STRENGTH DESIGN IS USED.	—	X	ACI 318: 8.1.3, 21.2.8	1908.5, 1909.1
4. INSPECTION OF ANCHORS POST-INSTALLED IN HARDENED CONCRETE MEMBERS.	—	X	ACI 318. 3.86, 8.1.3, 21.2.8	1909.1
5. VERIFYING USE OF REQUIRED DESIGN MIX.	—	X	ACI 318: Ch. 4, 5.2-5.4	1904.2, 1910.2, 1910.3
6. AT THE TIME FRESH CONCRETE IS SAMPLED TO FABRICATE SPECIMENS FOR STRENGTH TESTS, PERFORM SLUMP AND AIR CONTENT TESTS, AND DETERMINE THE TEMPERATURE OF THE CONCRETE.	X	—	ASTM C 172 ASTM C 31 ACI 318: 5.6, 5.8	1910.10
7. INSPECTION OF CONCRETE AND SHOTCRETE PLACEMENT FOR PROPER APPLICATION TECHNIQUES.	X	—	ACI 318: 5.9, 5.10	1910.6, 1910.7, 1910.8
8. INSPECTION FOR MAINTENANCE OF SPECIFIED CURING TEMPERATURE AND TECHNIQUES.	—	X	ACI 318: 5.11-5.13	1910.9
9. INSPECTION OF PRESTRESSED CONCRETE: a. APPLICATION OF PRESTRESSING FORCES. b. GROUTING OF BONDED PRESTRESSING TENDONS IN THE SEISMIC-FORCE-RESISTING SYSTEM.	X X	—	ACI 318: 18.20 ACI 318: 18.18.4	—
10. ERECTION OF PRECAST CONCRETE MEMBERS.	—	X	ACI 318: Ch.16	—
11. VERIFICATION OF IN-SITU CONCRETE STRENGTH, PRIOR TO STRESSING OF TENDONS IN POSTTENSIONED CONCRETE AND PRIOR TO REMOVAL OF SHORES AND FORMS FROM BEAMS AND STRUCTURAL SLABS.	—	X	ACI 318: 6.2	—
12. INSPECT FORMWORK FOR SHAPE, LOCATION AND DIMENSIONS OF THE CONCRETE MEMBER BEING FORMED.	—	X	ACI 318: 6.1.1	—

TABLE 1705.6
REQUIRED VERIFICATION AND INSPECTION OF SOILS

VERIFICATION AND INSPECTION TASK	CONTINUOUS DURING TASK LISTED	PERIODICALLY DURING TASK LISTED
1. VERIFY MATERIALS BELOW FOOTINGS ARE ADEQUATE TO ACHIEVE THE DESIGN BEARING CAPACITY.	—	X
2. VERIFY EXCAVATIONS ARE EXTENDED TO PROPER DEPTH AND HAVE REACHED PROPER MATERIAL.	—	X
3. PERFORM CLASSIFICATION AND TESTING OF COMPACTED FILL MATERIALS.	—	X
4. VERIFY USE OF PROPER MATERIALS, DENSITIES AND LIFT THICKNESSES DURING PLACEMENT AND COMPACTION OF COMPACTED FILL.	X	—
5. PRIOR TO PLACEMENT OF COMPACTED FILL, OBSERVE SUBGRADE AND VERIFY THAT SITE HAS BEEN PREPARED PROPERLY.	—	X

TABLE 1705.8
REQUIRED VERIFICATION AND OF CAST-IN-PLACE DEEP FOUNDATION ELEMENTS

VERIFICATION AND INSPECTION TASK	CONTINUOUS DURING TASK LISTED	PERIODICALLY DURING TASK LISTED
1. OBSERVE DRILLING OPERATIONS AND MAINTAIN COMPLETE AND ACCURATE RECORDS FOR EACH ELEMENT.	X	—
2. VERIFY PLACEMENT LOCATIONS AND PLUMBNESS CONFIRM ELEMENT DIAMETERS, BELL DIAMETERS (IF APPLICABLE), LENGTHS, EMBEDMENT INTO BEDROCK (IF APPLICABLE) AND ADEQUATE END-BEARING STRATA CAPACITY. RECORD CONCRETE OR GROUT VOLUMES.	X	—
4. VERIFY USE OF PROPER MATERIALS, DENSITIES AND LIFT THICKNESSES DURING PLACEMENT AND COMPACTION OF COMPACTED FILL.	—	—

LEVEL 1 REQUIRED VERIFICATION AND INSPECTION OF MASONRY CONSTRUCTION

INSPECTION TASK	FREQUENCY OF INSPECTION: CONTINUOUS DURING TASK LISTED	FREQUENCY OF INSPECTION: PERIODICALLY DURING TASK LISTED	REFERENCE FOR CRITERIA: IBC SECTION	REFERENCE FOR CRITERIA: ACI 530/ ASCE 5/ TMS 402[a]	REFERENCE FOR CRITERIA: ACI 530.1/ ASCE 6/ TMS 602[a]
1. AS MASONRY CONSTRUCTION BEGINS, THE FOLLOWING SHALL BE VERIFIED TO ENSURE COMPLIANCE:					
a. PROPORTIONS OF SITE-PREPARED MORTAR.	—	X	—	—	Art. 2.6A
b. CONSTRUCTION OF MORTAR JOINTS.	—	X	—	—	Art. 3.3B
c. LOCATION OF REINFORCEMENT , CONNECTORS, PRESTRESSING TENDONS AND ANCHORAGES.	—	X	—	—	Art. 3.4, 3.6A
d. PRESTRESSING TECHNIQUE.	—	X	—	—	Art. 3.6B
e. GRADE AND SIZE OF PRESTRESSING TENDONS AND ANCHORAGES.	—	X	—	—	Art. 2.4B, 2.4H
2. THE INSPECTION PROGRAM SHALL VERIFY:					
a. SIZE AND LOCATION OF STRUCTURAL ELEMENTS.	—	X	—	—	Art. 3.3G
b. TYPE, SIZE AND LOCATION OF ANCHORS, INCLUDING OTHER DETAILS OF ANCHORAGE OF MASONRY TO STRUCTURAL MEMBERS, FRAMES OR OTHER CONSTRUCTION.	—	X	—	Sec. 1.2.2(e), 2.1.4, 3.1.6	—
c. SPECIFIED SIZE, GRADE AND TYPE OF REINFORCEMENT	—	X	—	Sec. 1.13	Art. 2.4, 3.4
d. WELDING OF REINFORCING BARS.	X	—	—	Sec. 2.1.10.7.2, 3.3.3.4(b)	—
e. PROTECTION OF MASONRY DURING COLD WEATHER (TEMPERATURE BELOW 40°F) OR HOT WEATHER (TEMPERATURE ABOVE 90°F).	—	X	—	—	Art. 1.8C, 1.8D
f. APPLICATION AND MEASUREMENT OF PRESTRESSING FORCE.	—	X	—	—	Art. 3.6B
3. PRIOR TO GROUTING, THE FOLLOWING SHALL BE VERIFIED TO ENSURE COMPLIANCE:					
a. GROUT SPACE IS CLEAN.	—	X	—	—	Art. 3.2D
b. PLACEMENT OF REINFORCEMENT AND CONNECTORS AND PRESTRESSING TENDONS AND ANCHORAGES.	—	X	—	Sec. 1.13	Art. 3.4
c. PROPORTIONS OF SITE-PREPARED GROUT AND PRESTRESSING GROUT FOR BONDED TENDONS.	—	X	—	—	Art. 2.6B
d. CONSTRUCTION OF MORTAR JOINTS.	—	X	—	—	Art. 3.3B
4. GROUT PLACEMENT SHALL BE VERIFIED TO ENSURE COMPLIANCE WITH CODE AND CONSTRUCTION DOCUMENT PROVISIONS.	X	—	—	—	Art. 3.5
a. GROUTING OF PRESTRESSING BONDED TENDONS.	X	—	—	—	Art. 3.6C
5. PREPARATION OF ANY REQUIRED GROUT SPECIMENS, MORTAR SPECIMENS AND/OR PRISMS SHALL BE OBSERVED.	X	—	—	—	Art. 1.4
6. COMPLIANCE WITH REQUIRED INSPECTION PROVISIONS OF THE CONSTRUCTION DOCUMENTS AND THE APPROVED SUBMITTALS SHALL BE VERIFIED.	—	X	—	—	Art. 1.5

CITY OF McALLEN
SOFTBALL FIELD FACILITIES
MUNICIPAL PARK
McALLEN, TEXAS

McALLEN Parks & Recreation

HALFF
14800 ST. MARY'S LANE, SUITE 160
HOUSTON, TEXAS 77079-2943
TEL (281) 496-4200
FAX (281) 310-5259

Revision No.	Date	Description

STATE OF TEXAS
MIGUEL CHANIN
93127
LICENSED
PROFESSIONAL ENGINEER
7-11-18

100% CONSTRUCTION DOCUMENTS

Project No.:	17325
Issued:	07/11/2018
Drawn By:	LR
Checked By:	MC
Scale:	AS SHOWN
Sheet Title	GENERAL NOTES
Sheet Number	S1.01

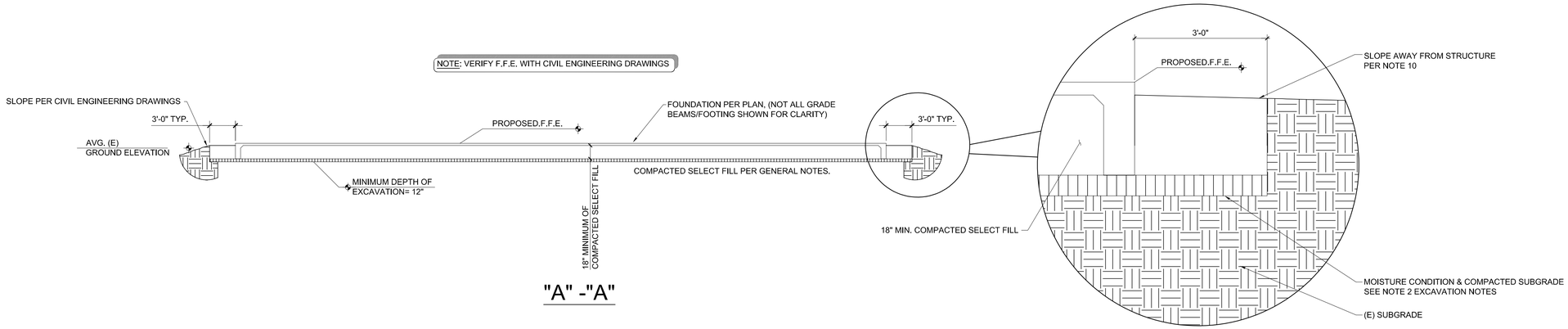

"A" -"A"

PROFILE

SCALE: NTS

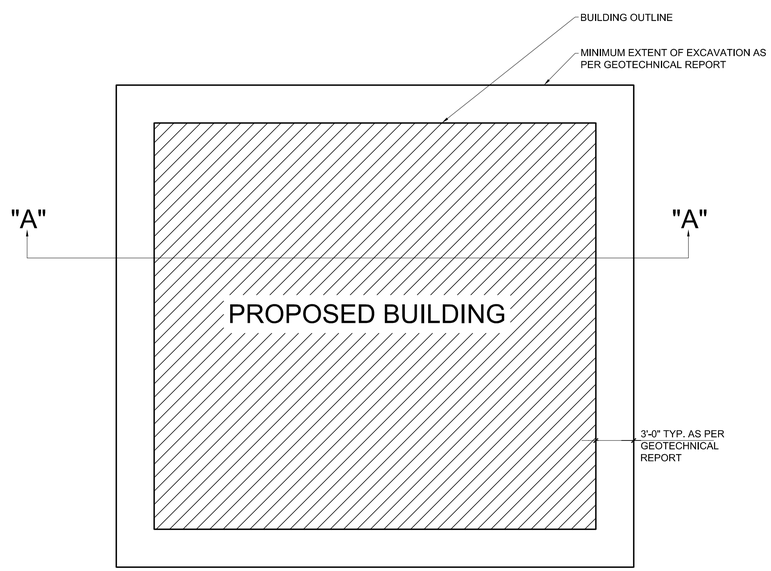

EXCAVATION NOTES

1. CONSTRUCTION AREAS REMOVE AT LEAST 12 INCHES OF TOP SOIL, VEGETATION, DEBRIS, ETC., FROM THE PROPOSED BUILDING AREA TO A DISTANCE OF 3'-0" OUTSIDE THE PROPOSED BUILDING LINE.

2. EXPOSED SUBGRADE SHOULD BE CAREFULLY PROOF ROLLED WITH A 15 TON PNEUMATIC ROLLER OR A FULLY LOADED DUMP TRUCK IN ORDER TO LOCATE AND DENSIFY ANY WEAK, COMPRESSIBLE ZONES. WEAK OR SOFT AREAS IDENTIFIED DURING PROOF ROLLING SHOULD BE REMOVED AND REPLACED WITH A SUITABLE, COMPACTED SELECT FILL IN ACCORDANCE WITH THE REQUIREMENTS BELOW. PRIOR TO FILL PLACEMENT, THE EXPOSED SUBGRADE SHOULD BE MOISTURE CONDITIONED BY SCARIFYING TO A MINIMUM DEPTH OF 8" AND RECOMPACTING TO A MINIMUM OF 95% OF THE MAXIMUM DRY DENSITY AS DETERMINED FROM THE ASTM D698 COMPACTION TEST. THE MOISTURE CONTENT SHOULD BE MAINTAINED AT OPTIMUM.

3. FILL BACK TO REQUIRED GRADE (A MINIMUM OF 18" OF SELECT FILL IS REQUIRED. REFER TO CIVIL PLANS FOR FINISHED FLOOR ELEVATION TO DETERMINE ADDITIONAL AMOUNT OF SELECT FILL NEEDED) WITH MATERIAL SELECTED AND COMPACTED IN ACCORDANCE WITH THE REQUIREMENTS BELOW.

4. SELECT FILL, WHEN PROPERLY SLAKED AND TESTED BY STANDARD LABORATORY METHODS, SHALL MEET THE FOLLOWING REQUIREMENTS:

   A. AGGREGATE BASE COURSE- TOP SIX (6) INCHES OF BUILDING PAD SHALL CONSIST OF SOILS CLASSIFIED AS SC,GC, CALICHE,CRUSHED LIMESTONE, OR CRUSHED CONCRETE BY THE USCS CLASSIFFICATION. THE CLAYEY GRAVEL AND CALICHE MATERIALS SHOULD MEET THE GRADATION REQUIREMENTS OF ITEM 247, TYPE B, GRADES 1 THROUGH 3 AS SPECIFIED IN THE 2014 TxDOT STANDARD SPECIFICATIONS MANUAL AND HAVE A PLASTICITY INDEX BETWEEN 7 AND 20. CRUSHED LIMESTONE OR CRUSHED CONCRETE MATERIAL SHOULD MEET THE REQUIREMENTS OF 2014 TxDOT ITEM 247, TYPE A OR D, GRADE 1 THROUGH 3. THE SELECT FILL MATERIALS SHOULD BE FREE OF ORGANIC MATERIAL AND DEBRIS, AND SHOULD NOT CONTAIN STONES LARGER THAN 2 INCHES IN THE MAXIMUM DIMENSION.

   B. THE FOLLOWING SOILS, AS CLASSIFIED ACCORDING TO THE USCS, MAY BE CONSIDERED SATISFACTORY FOR USE AS SELECT FILL MATERIALS AT THIS SITE: CL, SC, AND COMBINATIONS OF THESE SOILS. IN ADDITION TO THE USCS CLASSIFICATION, SELECT FILL MATERIALS SHALL HAVE A MAXIMUM LIQUID LIMIT OF 35 PERCENT, A PLASTICITY INDEX BETWEEN 7 AND 20 PERCENT, AND A MAXIMUM PARTICLE SIZE NOT EXCEEDING 2 INCHES OR ONE-HALF THE LOOSE LIFT THICKNESS, WHICHEVER IS SMALLER.

   C. ON-SITE SOIL (CL) MAY BE SUITABLE FOR USE AS SELECT FILL AS LONG AS IT MEETS THE REQUIREMENTS ABOVE.

5. SAMPLES OF PROPOSED SELECT FILL SHALL BE FURNISHED TO THE TESTING LABORATORY 7 DAYS PRIOR TO INSTALLATION TO PERMIT TIME FOR SPECIFICATION COMPLIANCE INSPECTION AND APPROVAL.

6. SELECT FILL UNDER ALL FLOORS AND WALKS SHALL BE COMPACTED IN THE FIELD IN LOOSE LIFTS OF ABOUT 8" TO 95% OF THE MAXIMUM DENSITY, AT OR 2% ABOVE OF THE OPTIMUM MOISTURE CONTENT, AS DETERMINED BY TEST METHOD ASTM D-698

7. SITE PREPARATION TESTING SHALL BE AS FOLLOWS:
   A. ATTERBERG LIMITS OF SELECT FILL MATERIAL:
      (1) ONE TEST PER 5,000 CY
   B. COMPACTION TEST:
      TO BE PERFORMED PER LIFT ON TEST PER 3,000 SF MINIMUM OF (4) FOUR TEST PER LIFT

8. GEOTECHNICAL REPORT SHALL BE CONSIDERED A PART OF THE CONSTRUCTION DOCUMENTS. CONTRACTOR TO REVIEW AND COMPLY WITH ALL EARTHWORK AND GRADING REQUIREMENT IN GEOTECHNICAL REPORT.

9. FINAL SITE GRADING TO SLOPE AWAY FROM THE STRUCTURE AND SHALL PREVENT WATER FROM PONDING IN THE AREAS ADJACENT TO THE STRUCTURE FOR A MINIMUM DISTANCE OF 10'-0". ANY PONDING CLOSE TO THE STRUCTURE MAY CREATE VOLUMETRIC CHANGES IN THE SOIL AND MAY LEAD TO LESS THAN OPTIMUM PERFORMANCE OF THE BUILDING FOUNDATION.

10. IT IS ALSO IMPORTANT TO MINIMIZE CHANGES IN MOISTURE CONTENT CREATED BY ROOF DRAINAGE, PLUMBING LEAKS, LANDSCAPING / IRRIGATION, AND DOWNSPOUT OUTFALLS. ANY PLUMBING LEAKS SHALL BE REPAIRED AS SOON AS POSSIBLE AND PROPER DRAINAGE PROVIDED AWAY FROM THE BUILDING. LARGE BUSHES AND TREES SHALL NOT BE PLACED IN AREAS DIRECTLY ADJACENT TO THE FOUNDATION AS THEIR ROOT SYSTEM MAY CREATE SUBSTANTIAL MOISTURE DIFFERENTIALS THAT MAY LEAD TO VOLUME CHANGES IN THE SOIL. LARGE BUSHES AND TREES SHOULD BE LOCATED AT A REASONABLE DISTANCE FROM THE FOUNDATION.

N
PLAN NORTH

EXCAVATION PLAN

SCALE: NTS

CHANIN ENGINEERING, LLC
TBPE FIRM REG. NUMBER F-9369
PH: (956) 687-9421
FAX: (956) 687-3211
400 Nolana, Suite H2
McAllen, Texas 78504
www.chaninengineering.com

CITY OF McALLEN
SOFTBALL FIELD FACILITIES
MUNICIPAL PARK
McALLEN, TEXAS

HALFF
14800 ST. MARY'S LANE, SUITE 160
HOUSTON, TEXAS 77079-2943
TEL (281) 556-6940
FAX (281) 310-5259

Revision		
No.	Date	Description

STATE OF TEXAS
MIGUEL CHANIN
93127
LICENSED
PROFESSIONAL ENGINEER
7-11-18

100% CONSTRUCTION DOCUMENTS

Project No.:	17325
Issued:	07/11/2018
Drawn By:	LR
Checked By:	MC
Scale:	AS SHOWN
Sheet Title	

EXCAVATION PLAN

S1.02
Sheet Number

CHANIN
ENGINEERING, LLC
TBPE FIRM REG. NUMBER F-9369
PH: (956) 687-9421
FAX: (956) 687-3211
400 Nolana, Suite H2
McAllen, Texas 78504
www.chaninengineering.com

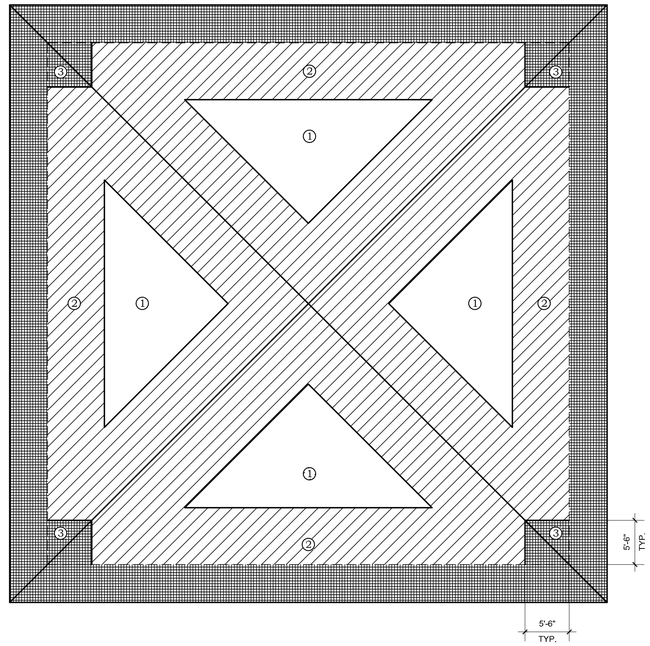

ALLOWABLE STRESS DESIGN

EFFECTIVE WIND AREA	ZONE	GROSS	NET
10	1	25.0 psf	19.0 psf
20	1	24.3 psf	18.3 psf
50	1	23.4 psf	17.4 psf
10	2	43.5 psf	37.5 psf
20	2	40.0 psf	34.0 psf
50	2	35.4 psf	29.4 psf
10	3	64.3 psf	58.3 psf
20	3	60.1 psf	54.1 psf
50	3	54.6 psf	48.6 psf

N
PLAN NORTH

ROOF UPLIFT PLAN
SCALE: NTS

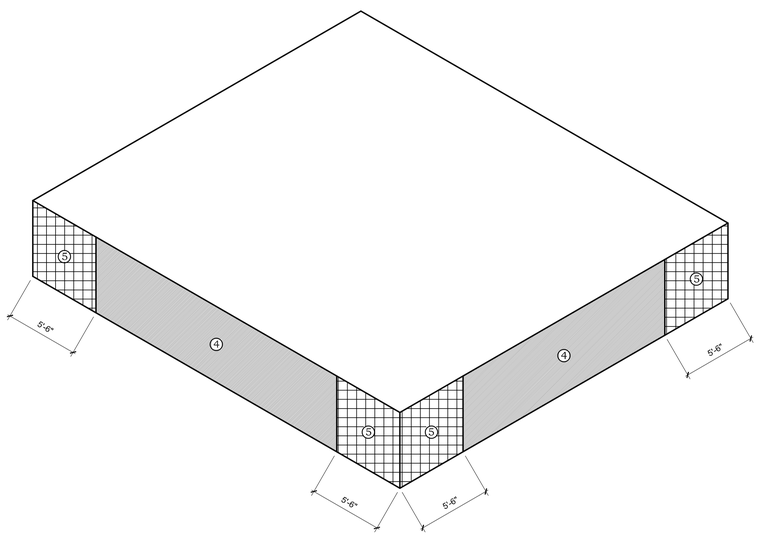

ALLOWABLE STRESS DESIGN

EFFECTIVE WIND AREA	ZONE	MAX PRESSURE
10	4	29.6 psf
20	4	28.4 psf
50	4	26.8 psf
10	5	36.5 psf
20	5	34.1 psf
50	5	30.8 psf

COMPONENTS AND CLADDING
SCALE: NTS

CITY OF McALLEN
SOFTBALL FIELD FACILITIES
MUNICIPAL PARK
McALLEN, TEXAS

McALLEN Parks & Recreation

HALFF
14800 ST. MARY'S LANE, SUITE 160
HOUSTON, TEXAS 77079-2943
TEL (281) 558-8540
FAX (281) 310-5259

Revision		
No.	Date	Description

STATE OF TEXAS
MIGUEL CHANIN
93127
LICENSED
PROFESSIONAL ENGINEER
7-11-18

100%
CONSTRUCTION
DOCUMENTS

Project No.:	17325
Issued:	07/11/2018
Drawn By:	LR
Checked By:	MC
Scale:	AS SHOWN

Sheet Title
COMPONENTS AND CLADDING

S1.03
Sheet Number

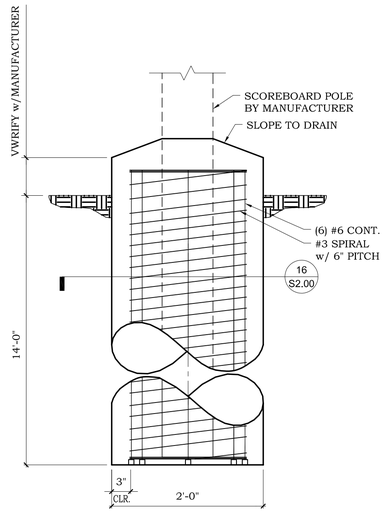

NOTE:
CONTRACTOR TO SUBMIT FINAL SCOREBOARD POLE SPECIFICATIONS FOR REVIEW. DEPTH OF PIER MAY NEED TO BE ADJUSTED UPON REVIEW.

NOTE: IF ANY GROUND WATER IS ENCOUNTERED DURING DRILLING OPERATIONS, STEEL CASING WILL BE REQUIRED

SCOREBOARD POLE DETAIL (TYP. P24)/ALTERNATE #4 | 18

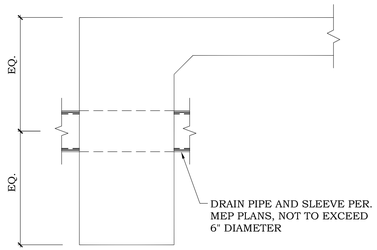

PIPE EXTERIOR FOOTING | 13

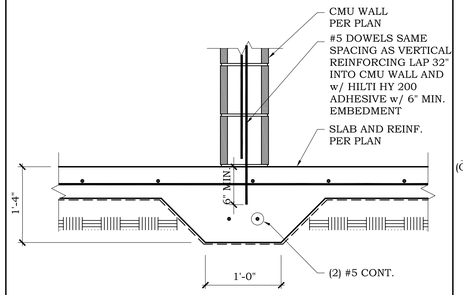

THICKENED SLAB AT NON BEARING CMU WALL | 9

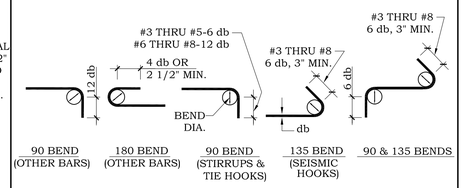

DIAMETER OF BENDS	
STIRRUPS AND TIES	4 db FOR #3 THRU #5 BARS
	6 db FOR #6 THRU #8 BARS
ALL OTHERS	6 db FOR #3 THRU #8 BARS
	8 db FOR #9 THRU #11 BARS
	10 db FOR #14 THRU #18 BARS

STANDARD HOOKS | 5

NOT USED | 1

CHANIN ENGINEERING, LLC
TBPE FIRM REG. NUMBER F-9369
PH: (956) 687-9421
FAX: (956) 687-3211
400 Nolana, Suite H2
McAllen, Texas 78504
www.chaninengineering.com

CITY OF McALLEN
SOFTBALL FIELD FACILITIES
MUNICIPAL PARK
McALLEN, TEXAS

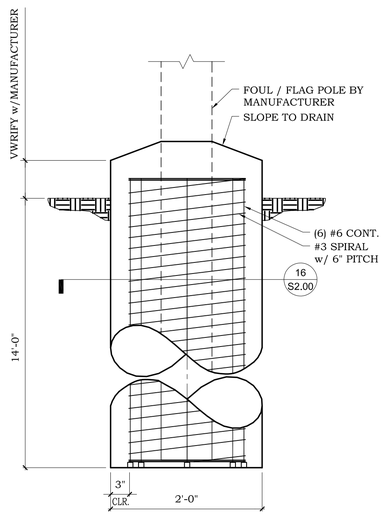

NOTE:
CONTRACTOR TO SUBMIT FINAL FOUL POLE SPECIFICATIONS FOR REVIEW. DEPTH OF PIER MAY NEED TO BE ADJUSTED UPON REVIEW.

NOTE: IF ANY GROUND WATER IS ENCOUNTERED DURING DRILLING OPERATIONS, STEEL CASING WILL BE REQUIRED

FOUL / FLAG POLE DETAIL (TYP. P24) | 15

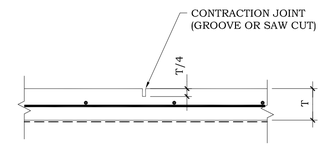

1. JOINT PATTERN SHALL BE NEARLY SQUARE
2. JOINT SPACING SHALL NOT EXCEED 15'-0"

CONTRACTION JOINT DETAIL | 10

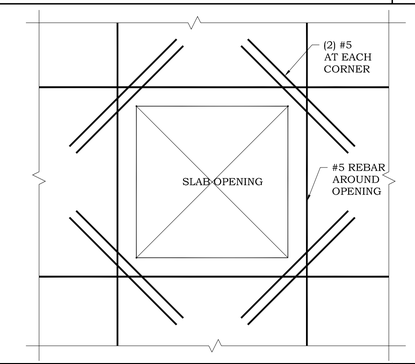

OPENINGS IN SLAB | 6

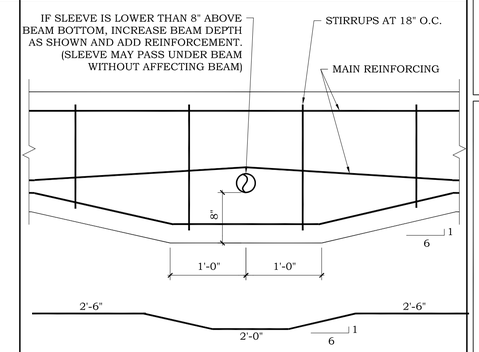

TYPICAL SLEEVE IN GRADE BEAM | 2

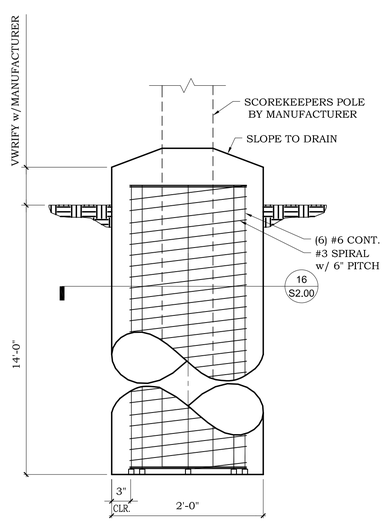

NOTE:
CONTRACTOR TO SUBMIT FINAL FOUL POLE SPECIFICATIONS FOR REVIEW. DEPTH OF PIER MAY NEED TO BE ADJUSTED UPON REVIEW.

NOTE: IF ANY GROUND WATER IS ENCOUNTERED DURING DRILLING OPERATIONS, STEEL CASING WILL BE REQUIRED

SCOREKEEPERS POLE DETAIL (TYP. P24) | 20

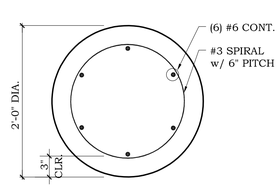

PIER DETAIL 24 | 16

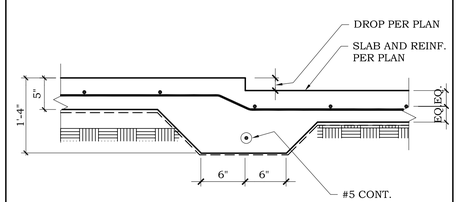

DROP AT SLAB ON GRADE | 11

FOOTING SCHEDULE AT STEEL COLUMNS			
TYPE	A	DEPTH	REBAR REINFORCEMENT
S2	2'-6"	3'-0"	#5'S @ 12" O.C. E.W. TOP & BOTTOM
S3	3'-6"	3'-0"	#5'S @ 12" O.C. E.W. TOP & BOTTOM
S3A	3'-6"	4'-0"	#5'S @ 12" O.C. E.W. TOP, MIDDLE & BOTTOM
S4	4'-6"	3'-0"	#5'S @ 12" O.C. E.W. TOP & BOTTOM
S5A	5'-6"	4'-0"	#5'S @ 12" O.C. E.W. TOP, MIDDLE & BOTTOM
S6	6'-6"	3'-0"	#5'S @ 12" O.C. E.W. TOP, MIDDLE & BOTTOM

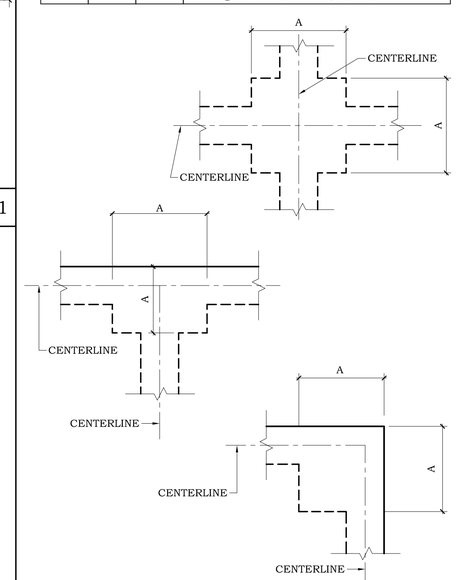

FOOTING SCHEDULE | 8

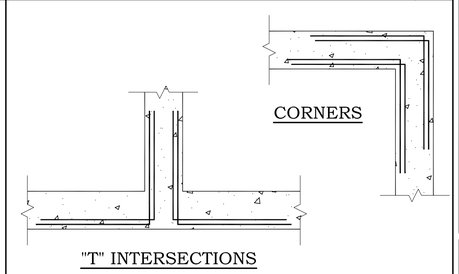

NOTE:
PROVIDE (4) #6 x 6'-0" CORNER BARS (2-TOP & 2-BOTTOM) AS SHOWN IN DETAILS ABOVE

TYPICAL CORNER BARS | 3

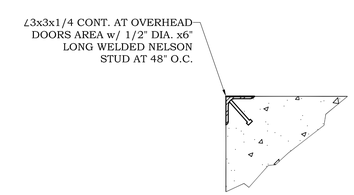

EXTERIOR FOOTING AT OVERHEAD DOOR | 12

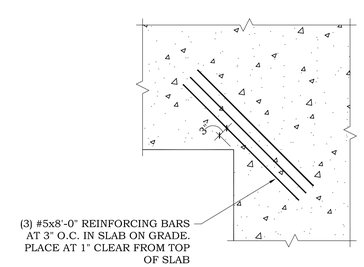

TYPICAL SLAB REINFORCING | 4

HALFF
14800 ST. MARY'S LANE, SUITE 160
HOUSTON, TEXAS 77079-2943
TEL (281) 558-8700
FAX (281) 310-5259

Revision		
No.	Date	Description

STATE OF TEXAS
MIGUEL CHANIN
93127
LICENSED
PROFESSIONAL ENGINEER
7-11-18

100% CONSTRUCTION DOCUMENTS

Project No.:	17325
Issued:	07/11/2018
Drawn By:	LR
Checked By:	MC
Scale:	AS SHOWN

Sheet Title
TYPICAL DETAILS

S2.00
Sheet Number

1. TYPICAL WALL REINFORCING AS CALLED OUT IN PLANS AND GENERAL NOTES.
2. VERTICAL REINFORCING AT CONTROL JOINTS, REFER TO DETAIL 8/S2.01
3. LINTELS PER LINTEL SCHEDULE, REFER TO DETAIL 7/S2.01
4. ADDITIONAL VERTICAL REINFORCING AT JAMBS OF ALL OPENINGS
5. WALL CORNER REINFORCING, REFER TO DETAIL 2,3,4/S2.01
6. DOWELS TO MATCH VERTICAL REINFORCEMENT PER PLAN, TYPICAL
7. CONTROL JOINT SPACING AS NOTED IS MAXIMUM ALLOWED, COORDINATE CONTROL JOINT LOCATIONS w/ARCHITECTURAL PLANS.

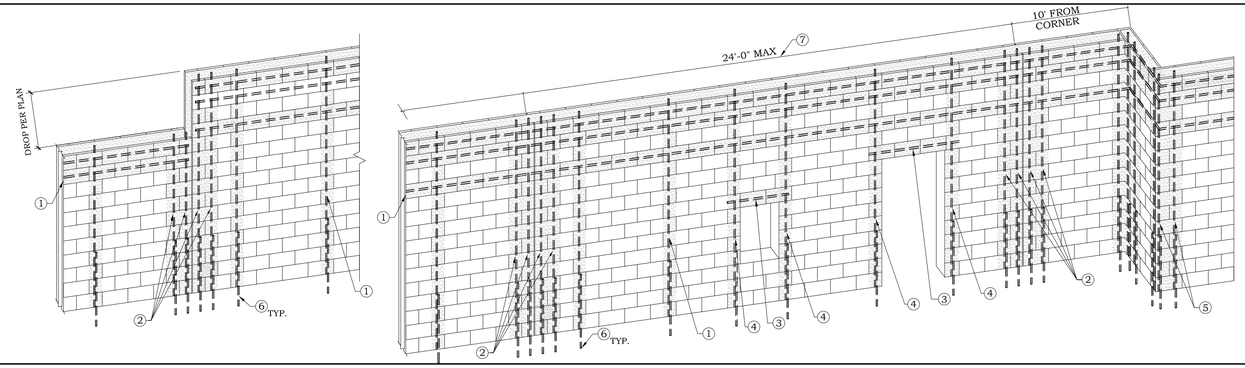

TYPICAL CMU WALL CONSTRUCTION | 5

CHANIN ENGINEERING, LLC
TBPE FIRM REG. NUMBER F-9369
PH: (956) 687-9421
FAX: (956) 687-3211
400 Nolana, Suite H2
McAllen, Texas 78504
www.chaninengineering.com

NOT USED | 1

CITY OF McALLEN
SOFTBALL FIELD FACILITIES
MUNICIPAL PARK
McALLEN, TEXAS

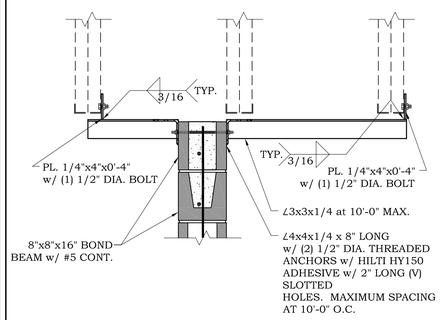

CMU WALL TO METAL STUD TRUSS | 18

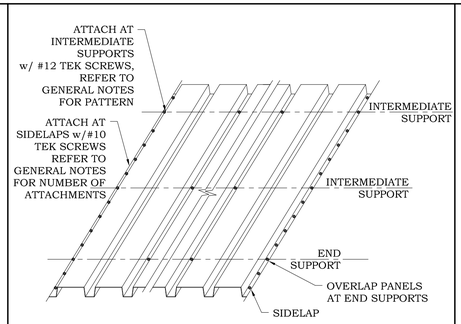

TYPICAL METAL DECK ATTACHMENT | 14

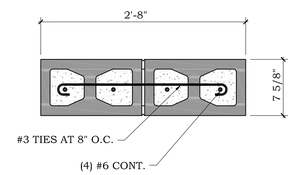

8" PILASTER "P1" | 10

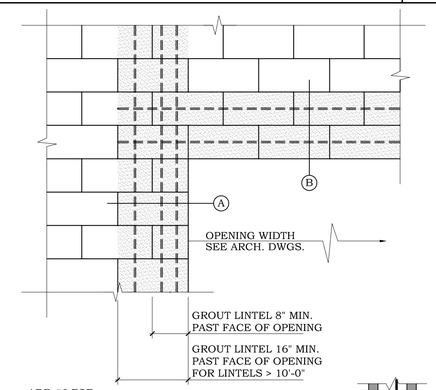

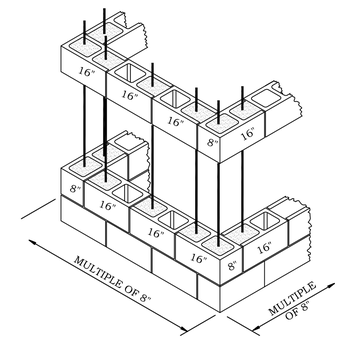

TYPICAL CMU CORNER DETAIL | 2

NOT USED | 19

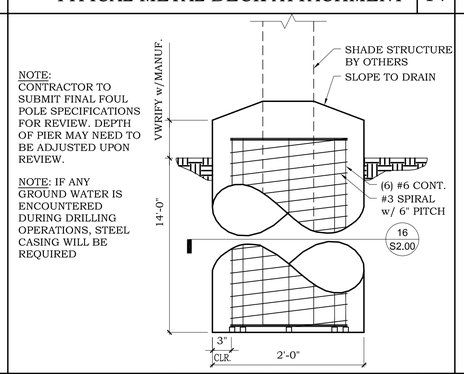

SHADE STRUCTURE PIER DETAIL ALTERNATE #2 | 15

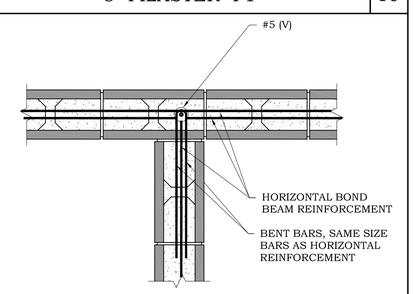

TYPICAL BOND BEAM INTERSECTION | 11

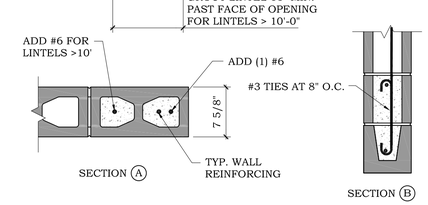

LINTEL SCHEDULE | 7

CLEAR SPAN	WIDTH	DEPTH	REINFORCING	#3 TIES AT:	REMARKS
<3'-4"	8"	8"	(1)#5		
<4'-8"	8"	16"	(1)#5 (T) & (B)	8"	
<6'-8"	8"	16"	(1)#6 (T) & (B)	8"	
<10'-0"	8"	24"	(1)#6 (T) & (B)	8"	
<12'-0"	8"	24"	(1)#7 (T) & (B)	8"	

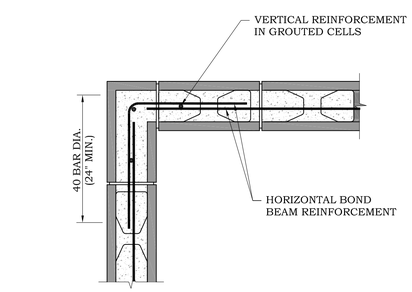

TYPICAL BOND BEAM CORNER | 3

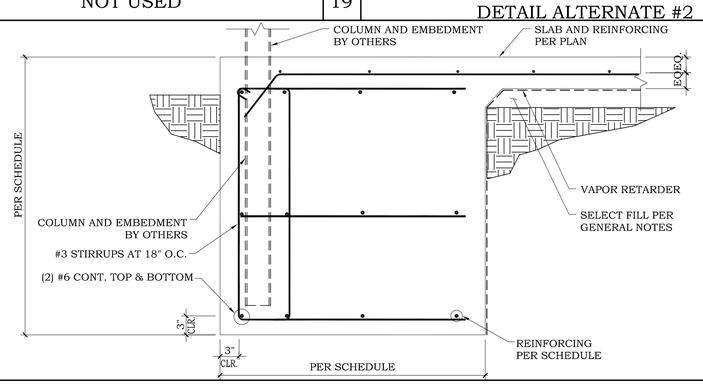

EXTERIOR FOOTING | 16

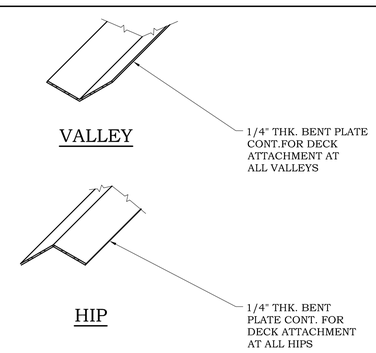

TYPICAL BENT PLATES FOR HIP AND VALLEY | 12

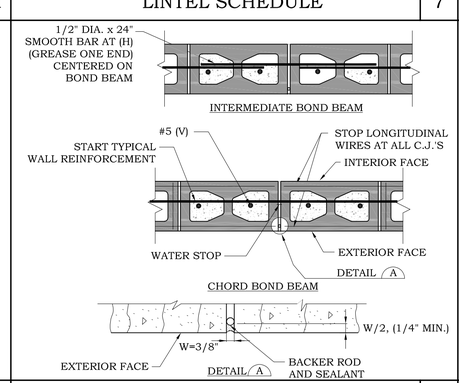

CMU CONTROL JOINT (C.J.) | 8

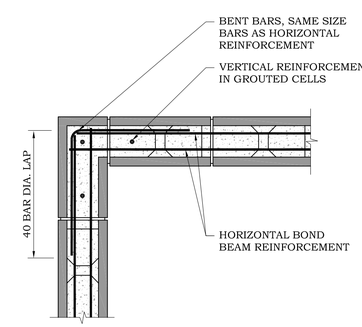

TYPICAL BOND BEAM CORNER | 4

HALFF
14800 ST. MARY'S LANE, SUITE 160
HOUSTON, TEXAS 77079-2943
TEL (281) 558-8540
FAX (281) 310-5259

Revision		
No.	Date	Description

STATE OF TEXAS
MIGUEL CHANIN
93127
LICENSED
PROFESSIONAL ENGINEER
7-11-18

100% CONSTRUCTION DOCUMENTS

Project No.:	17325
Issued:	07/11/2018
Drawn By:	LR
Checked By:	MC
Scale:	AS SHOWN

Sheet Title
TYPICAL DETAILS

S2.01
Sheet Number

MARK	DESCRIPTION	SIZE(*)
A.	TOP TRACK	6" x
B.	BOTTOM TRACK	6" x
C.	STUD	6" x
D.	DOUBLE STUD	(2) 6" x
E.	BRIDGING	1 1/2 x
F.	BLOCKING	6" x

NOTE:
1. MEMBER SIZES AND ATTACHMENTS SHALL BE DESIGNED BY A TEXAS REGISTERED PROFESSIONAL ENGINEER. MEMBERS SHOWN IN THIS DETAILS ARE TYPICAL.

2. ALL STUDS SHALL BE SPACED AT A MAXIMUM OF 16" O.C.

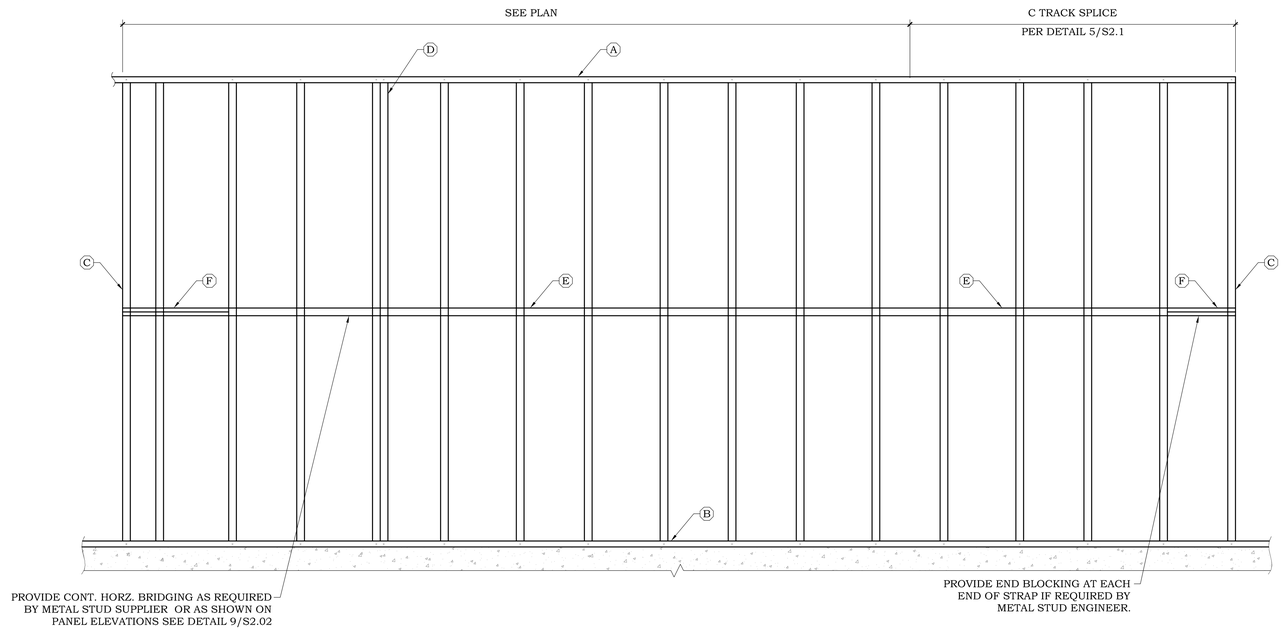

EXTERIOR METAL STUD WALL ELEVATION | 10

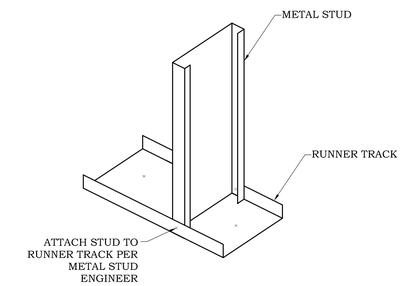

STUD ATTACHMENT TO RUNNER TRACK | 5

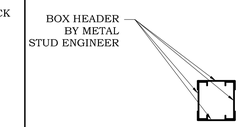

NOTE: FOR JAMB CONNECTION SEE DETAIL 3/S2.1

BOXED HEADER | 1

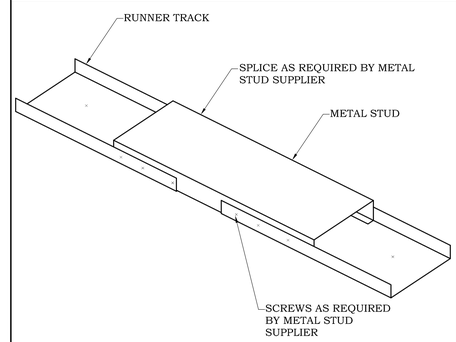

RUNNER TRACK SPLICE | 6

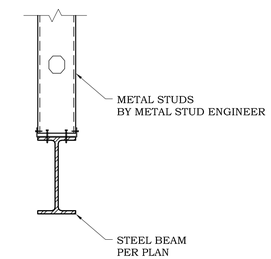

METAL STUD WALL TO STEEL BEAM | 2

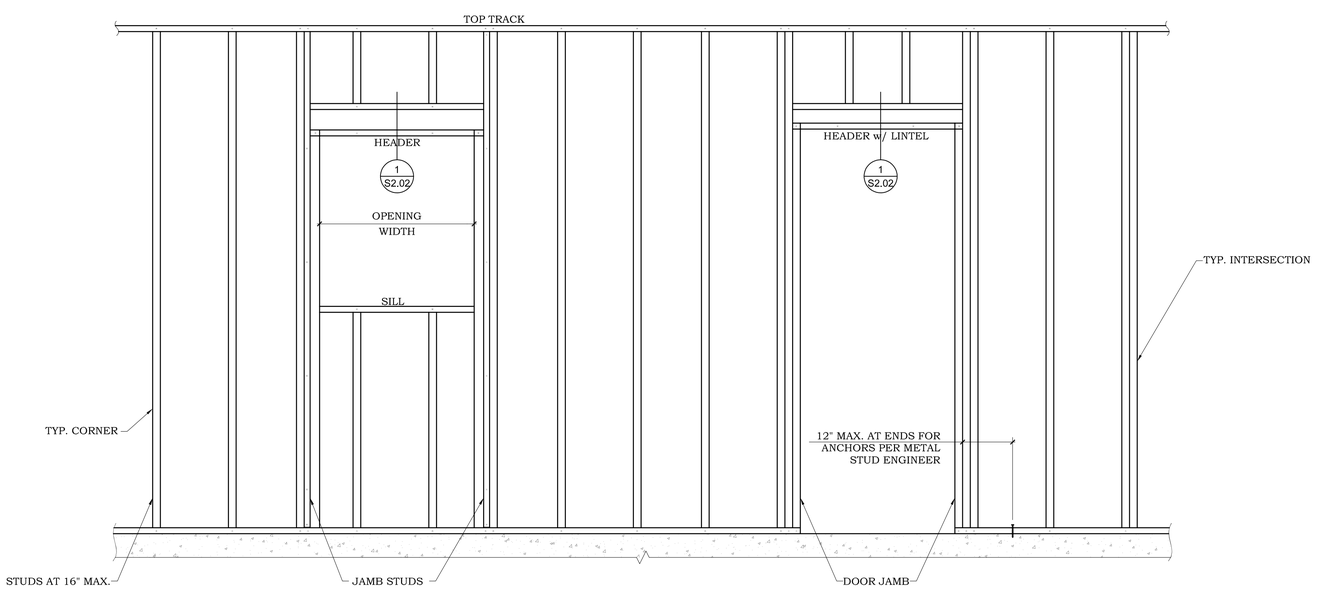

METAL STUD WALL ELEVATION WITH OPENING | 12

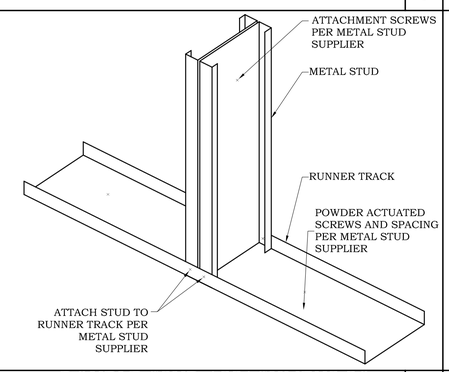

DOUBLE STUD ATTACHMENT TO RUNNER TRACK | 7

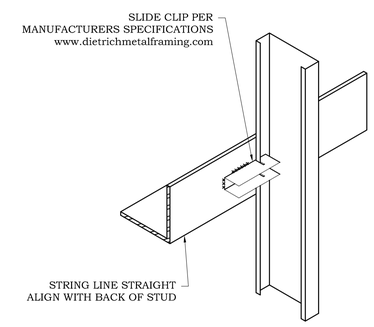

SLIDE CLIP DETAIL | 3

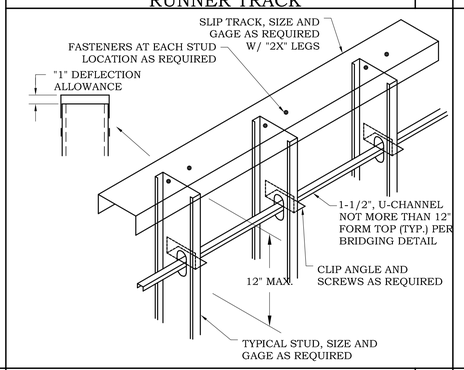

U-CHANNEL TO TYPICAL STUDS | 8

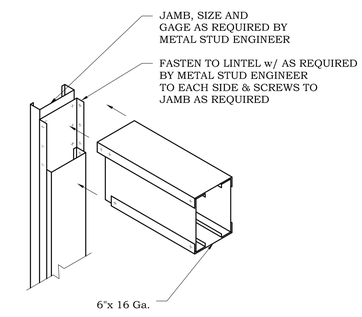

BOXED HEADER TO JAMB CONNECTION | 4

CHANIN ENGINEERING, LLC
TBPE FIRM REG. NUMBER F-9369
PH: (956) 687-9421
FAX: (956) 687-3211
400 Nolana, Suite H2
McAllen, Texas 78504
www.chaninengineering.com

CITY OF McALLEN
SOFTBALL FIELD FACILITIES
MUNICIPAL PARK
McALLEN, TEXAS

McALLEN Parks & Recreation

HALFF
14800 ST. MARY'S LANE, SUITE 160
HOUSTON, TEXAS 77079-2943
TEL (281) 558-8540
FAX (281) 310-5259

Revision		
No.	Date	Description

STATE OF TEXAS
MIGUEL CHANIN
93127
LICENSED
PROFESSIONAL ENGINEER
7-11-18

100% CONSTRUCTION DOCUMENTS

Project No.:	17325
Issued:	07/11/2018
Drawn By:	LR
Checked By:	MC
Scale:	AS SHOWN

Sheet Title
TYPICAL DETAILS

S2.02
Sheet Number

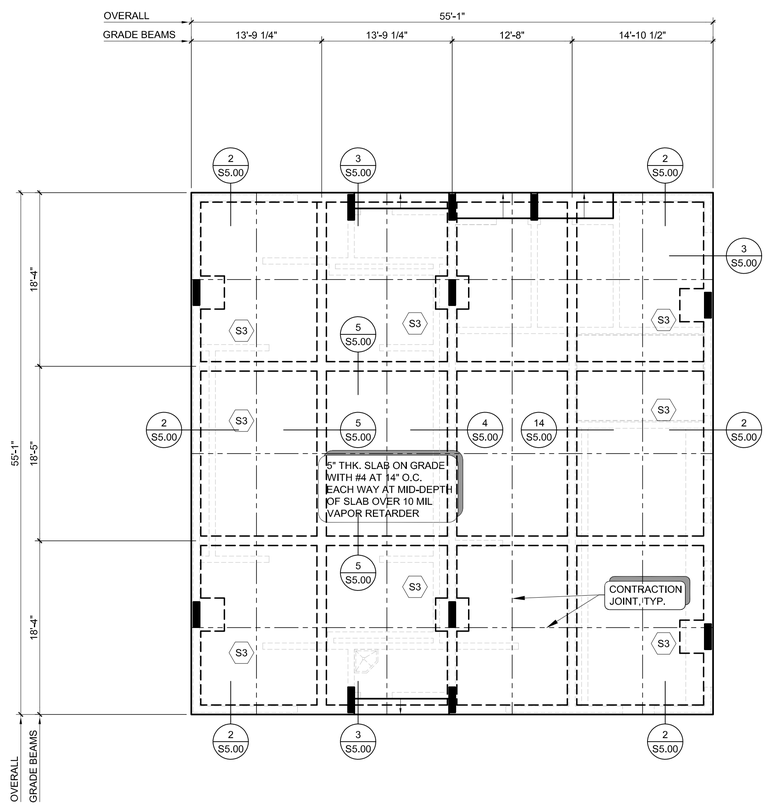

FOUNDATION NOTES:

1. CONTRACTOR TO VERIFY ALL DIMENSIONS WITH ARCHITECTURAL PLANS BEFORE COMMENCING WORK.
2. CONTRACTOR TO VERIFY LOCATION OF ANY/ALL DROPS AND DRAINS IN SLAB WITH ARCHITECTURAL DRAWINGS.
3. CONTRACTOR TO VERIFY REQUIRED F.F.E. WITH CIVIL ENGINEERING DRAWINGS.
4. REFER TO FOOTING SCHEDULE FOR FOOTING SIZE AND REINFORCEMENT, SEE DETAIL 8/S2.00.
5. FOR THICKENED SLAB UNDERNEATH ALL CMU WALLS SEE 9/S2.00.

FOUNDATION PLAN

SCALE: 1/8"=1'-0"

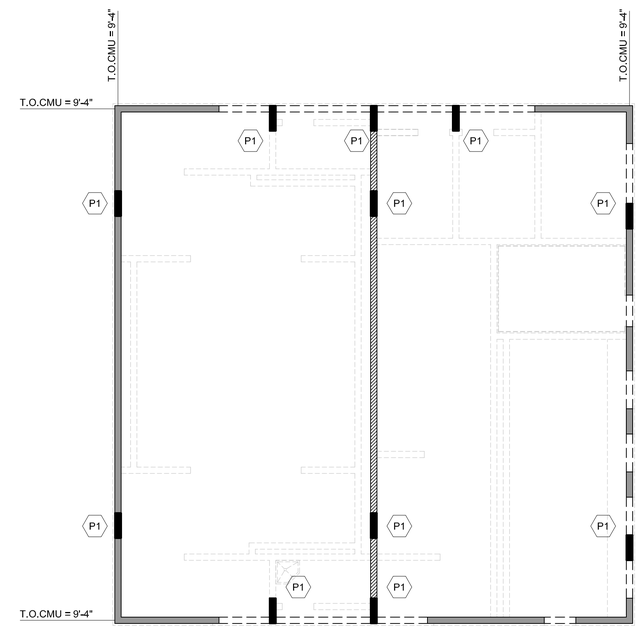

CMU WALL LAYOUT NOTES:

1. IF ANY DISCREPANCIES ARE FOUND BETWEEN THESE DRAWINGS AND THE ARCHITECTURAL DRAWINGS THE CONTRACTOR SHALL NOTIFY THE ARCHITECT AND ENGINEER BEFORE COMMENCING CONSTRUCTION.
2. FOR TYPICAL CMU WALL CONSTRUCTION SEE SHEET S2.01
3. INDICATES EXTERIOR 8" CMU WALL WITH #5 (V) AT 48" O.C. AND #5 (H) AT 8'-0" O.C., U.N.O.
4. INDICATES INTERIOR 8" LOAD BEARING CMU WALL WITH #5 (V) AT 48" O.C. AND #5 (H) AT 8'-0" O.C., U.N.O.
5. INDICATES LINTEL, SEE DETAIL 7/S2.01
6. ALL CMU WALLS ARE NOT HATCHED REFER TO GENERAL NOTES FOR REINFORCEMENT.
7. FOR SPECIAL INSPECTION REQUIREMENTS SEE GENERAL NOTES.
8. ALL TOP OF WALLS FROM FINISH FLOOR ELEVATION 0'-0".
9. SEE ARCHITECTURAL PLANS FOR EXACT LOCATION, LENGTH, AND HEIGHT OF ALL OPENINGS IN CMU WALLS.
10. FOR CONTROL JOINT LOCATIONS, SEE ARCHITECTURAL DRAWINGS.
11. PROVIDE CMU LINTEL OVER ALL MECHANICAL SYSTEM PENETRATIONS IN CMU WALL. COORDINATE WITH MEP DRAWINGS FOR ALL LOCATIONS.
12. 8" CMU WALL IS A NOMINAL DIMENSION, ACTUAL WIDTH IS 7 5/8".
13. P1 INDICATES PILASTER P1, SEE DETAIL 10/S2.01

CMU WALL LAYOUT PLAN

SCALE: 1/8"=1'-0"

CHANIN ENGINEERING, LLC
TBPE FIRM REG. NUMBER F-9369
PH: (956) 687-9421
FAX: (956) 687-3211
400 Nolana, Suite H2
McAllen, Texas 78504
www.chaninengineering.com

CITY OF McALLEN
SOFTBALL FIELD FACILITIES
MUNICIPAL PARK
McALLEN, TEXAS

McALLEN Parks & Recreation

HALFF
14800 ST. MARY'S LANE, SUITE 160
HOUSTON, TEXAS 77079-2943
TEL (281) 558-8300
FAX (281) 310-5259

Revision		
No.	Date	Description

STATE OF TEXAS
MIGUEL CHANIN
93127
LICENSED
PROFESSIONAL ENGINEER
7-11-18

100% CONSTRUCTION DOCUMENTS

Project No.:	17325
Issued:	07/11/2018
Drawn By:	LR
Checked By:	MC
Scale:	AS SHOWN

Sheet Title
FOUNDATION/ CMU WALL PLANS

S3.00
Sheet Number

CHANIN
ENGINEERING, LLC
TBPE FIRM REG. NUMBER F-9369
PH: (956) 687-9421
FAX: (956) 687-3211
400 Nolana, Suite H2
McAllen, Texas 78504
www.chaninengineering.com

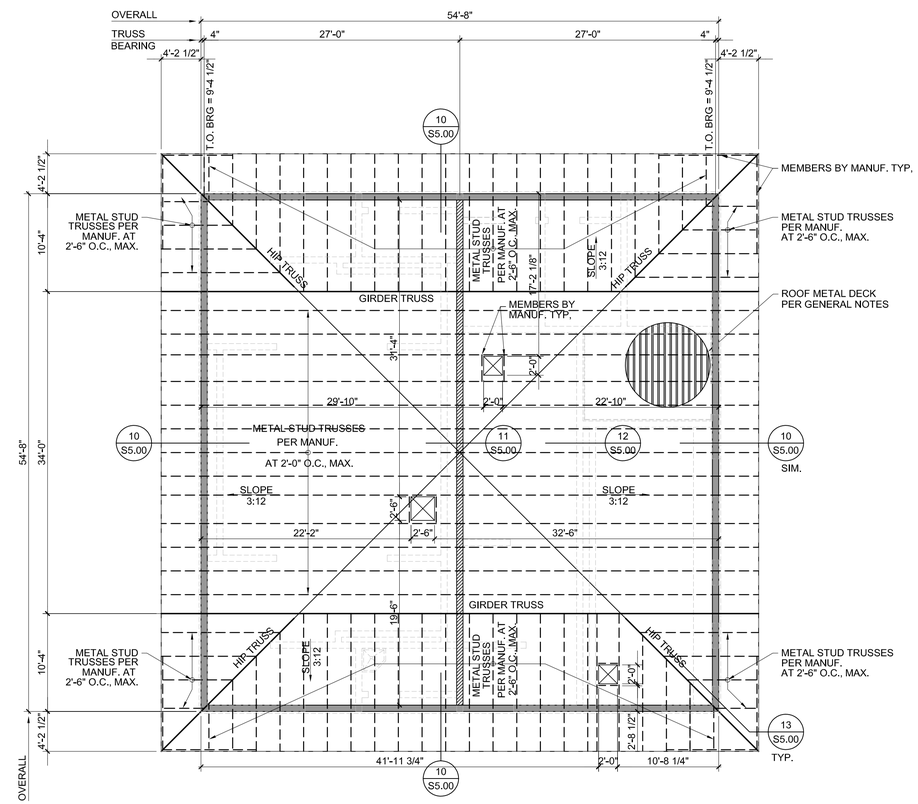

FRAMING NOTES:

1. CONTRACTOR TO VERIFY ALL DIMENSIONS WITH ARCHITECTURAL PLANS BEFORE COMMENCING WORK.
2. REFER TO ARCHITECTURAL DRAWINGS FOR ANY ADDITIONAL DIMENSIONS.
3. REFER TO ARCH'L PLANS FOR ROOF OVERHANG DIMENSION.
4. METAL STUD TRUSSES MANUFACTURER TO PROVIDE ADEQUATE BRIDGING FOR FOR TRUSSES.
5. CONTRACTOR TO COORDINATE ALL MECHANICAL, ELECTRICAL AND PLUMBING COMPONENTS SUPPORTED BY THE STRUCTURE WITH THE STRUCTURE MANUFACTURER.
6. CONTRACTOR TO COORDINATE EXACT LOCATION AND SIZE OF ANY AND ALL ROOF HATCHES WITH ARCH'L DRAWINGS.
7. 8" CMU WALL IS A NOMINAL DIMENSION, ACTUAL WIDTH IS 7 5/8".
8. REFER TO M.E.P. DRAWINGS FOR ANY HOUSEKEEPING PADS AT MECHANICAL ROOMS.

ROOF FRAMING PLAN

SCALE: 1/8"=1'-0"

CITY OF McALLEN
SOFTBALL FIELD FACILITIES
MUNICIPAL PARK
McALLEN, TEXAS

McALLEN Parks & Recreation

HALFF
14800 ST. MARY'S LANE, SUITE 160
HOUSTON, TEXAS 77079-2943
TEL (281) 558-8000
FAX (281) 310-5259

Revision		
No.	Date	Description

STATE OF TEXAS
MIGUEL CHANIN
93127
LICENSED
PROFESSIONAL ENGINEER
7-11-18

100% CONSTRUCTION DOCUMENTS

Project No.:	17325
Issued:	07/11/2018
Drawn By:	LR
Checked By:	MC
Scale:	AS SHOWN

Sheet Title

FRAMING PLANS

S4.00

Sheet Number

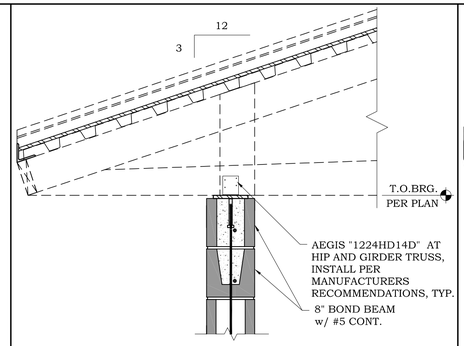

NOT USED | 17

METAL STUD GIRDER TRUSS TO CMU WALL | 13

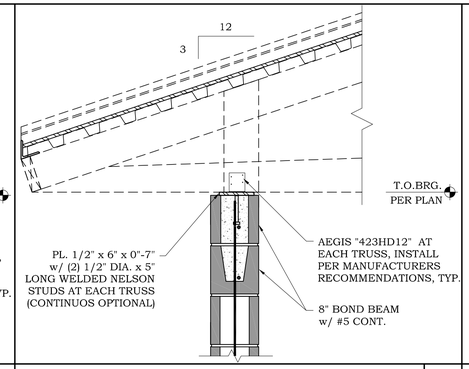

METAL STUD TRUSS TO CMU WALL | 9

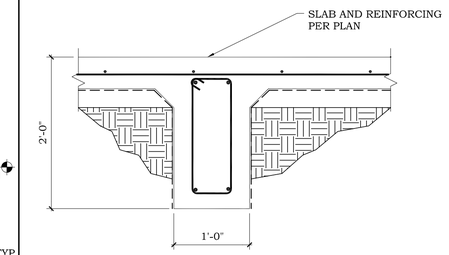

INTERIOR FOOTING | 5

NOT USED | 1

CHANIN ENGINEERING, LLC
TBPE FIRM REG. NUMBER F-9369
PH: (956) 687-9421
FAX: (956) 687-3211
400 Nolana, Suite H2
McAllen, Texas 78504
www.chaninengineering.com

CITY OF McALLEN
SOFTBALL FIELD FACILITIES
MUNICIPAL PARK
McALLEN, TEXAS

NOT USED | 18

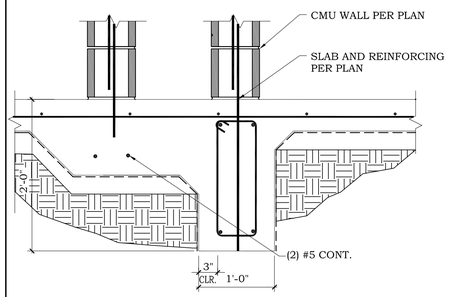

INTERIOR FOOTING | 14

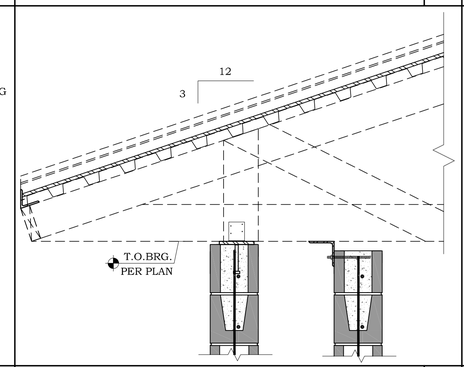

METAL STUD TRUSS TO CMU WALL | 10

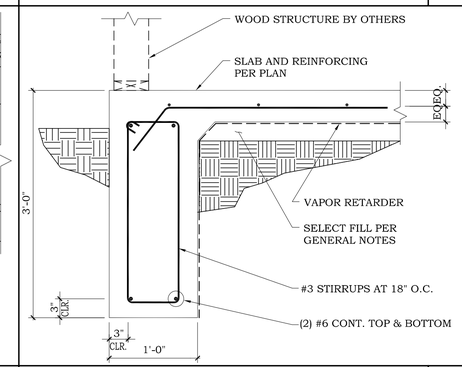

EXTERIOR FOOTING | 6

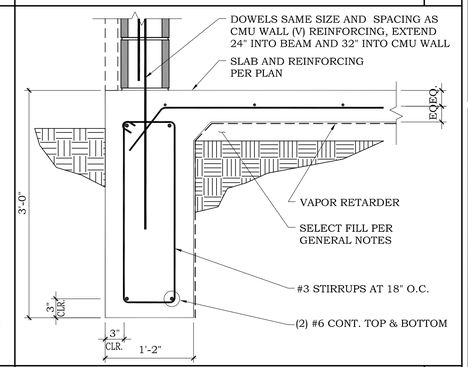

EXTERIOR FOOTING | 2

NOT USED | 19

NOT USED | 15

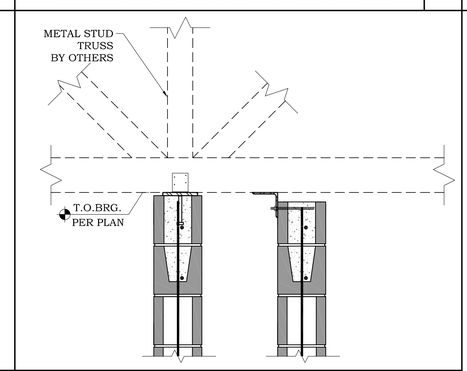

METAL STUD TRUSS TO CMU WALL | 11

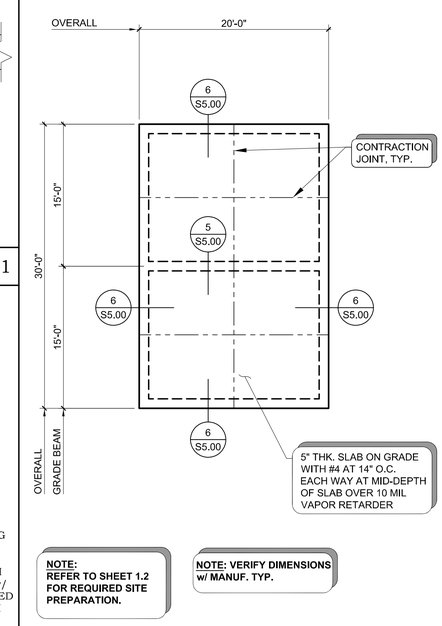

FOUNDATION PAD FOR MAINTENANCE SHED/ALTERNATE #1 | 8

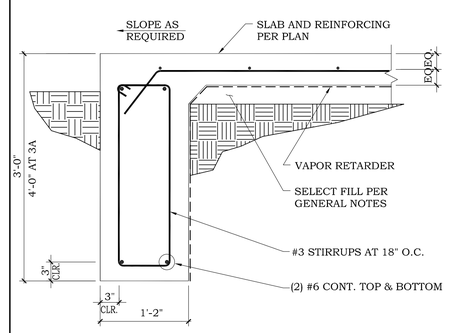

EXTERIOR FOOTING | 3A | 3

NOT USED | 20

NOT USED | 16

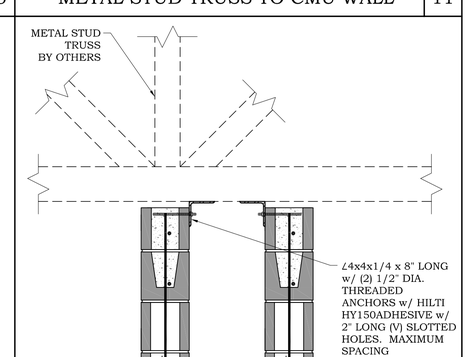

METAL STUD TRUSS TO CMU WALL AT NON LOAD BEARING WALL | 12

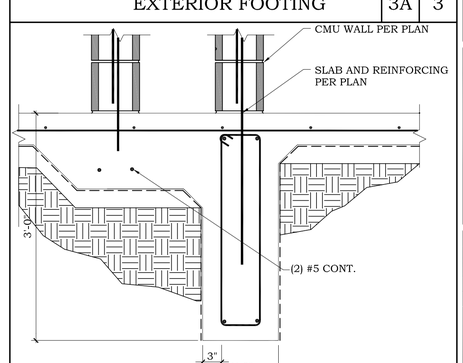

INTERIOR FOOTING | 4

HALFF
14800 ST. MARY'S LANE, SUITE 160
HOUSTON, TEXAS 77079-2943
TEL (281) 558-8700
FAX (281) 310-5259

Revision No.	Date	Description

STATE OF TEXAS
MIGUEL CHANIN
93127
LICENSED
PROFESSIONAL ENGINEER
7-11-18

100% CONSTRUCTION DOCUMENTS

Project No.:	17325
Issued:	07/11/2018
Drawn By:	LR
Checked By:	MC
Scale:	AS SHOWN
Sheet Title	DETAILS
Sheet Number	S5.00

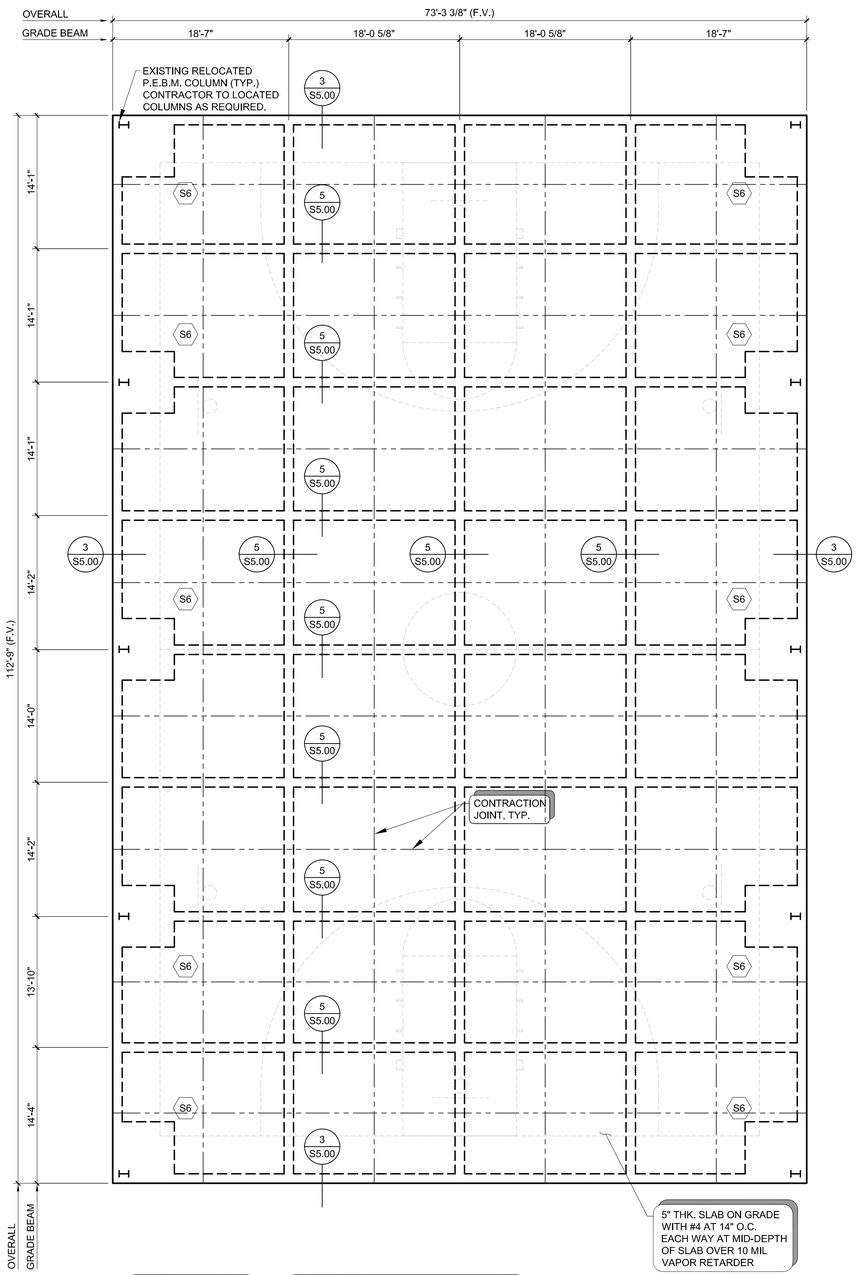

FOUNDATION FOR BASKETBALL COURT/ALTERNATE #3 | 16

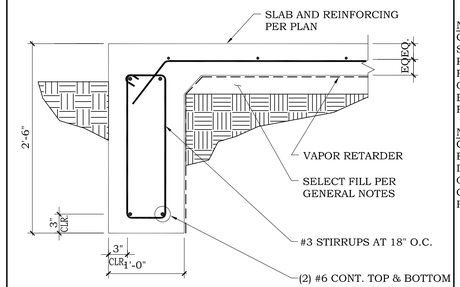

EXTERIOR FOOTING | 9

NOTE: CONTRACTOR TO SUBMIT FINAL FOUL POLE SPECIFICATIONS FOR REVIEW. DEPTH OF PIER MAY NEED TO BE ADJUSTED UPON REVIEW.

NOTE: IF ANY GROUND WATER IS ENCOUNTERED DURING DRILLING OPERATIONS, STEEL CASING WILL BE REQUIRED

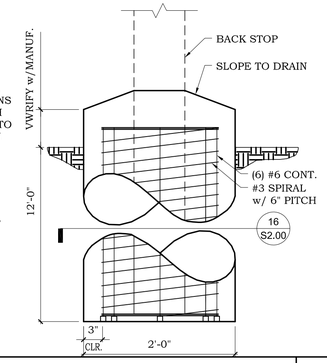

BACK STOP PIER DETAIL | 5

NOT USED | 1

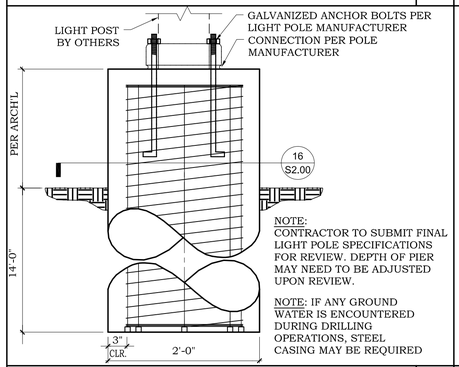

NOTE: CONTRACTOR TO SUBMIT FINAL LIGHT POLE SPECIFICATIONS FOR REVIEW. DEPTH OF PIER MAY NEED TO BE ADJUSTED UPON REVIEW.

NOTE: IF ANY GROUND WATER IS ENCOUNTERED DURING DRILLING OPERATIONS, STEEL CASING MAY BE REQUIRED

LIGHT POLE DETAIL (TYP) | 10

NOTE: REFER TO SHEET 1.2 FOR REQUIRED SITE PREPARATION.

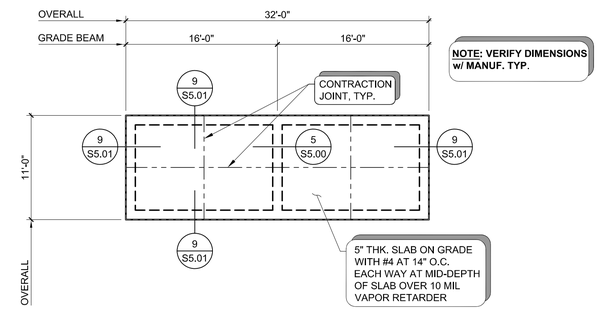

NOTE: VERIFY DIMENSIONS w/ MANUF. TYP.

FOUNDATION FOR BLEACHERS | 2

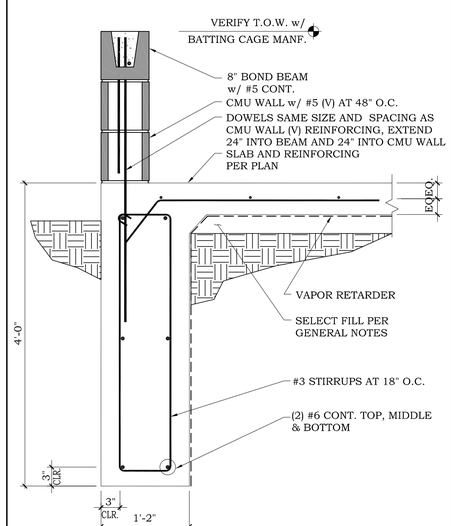

EXTERIOR FOOTING | 12

NOTE: REFER TO SHEET 1.2 FOR REQUIRED SITE PREPARATION.

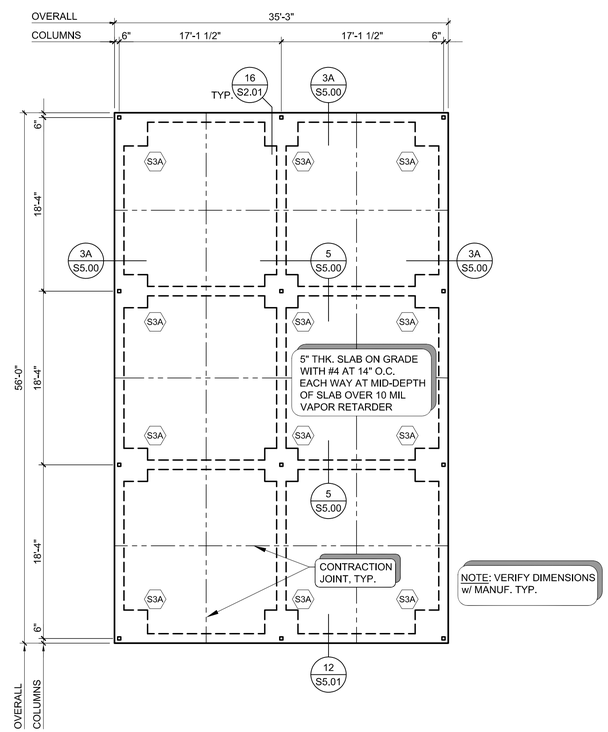

NOTE: VERIFY DIMENSIONS w/ MANUF. TYP.

BATTING CAGE PLAN | 4

CHANIN ENGINEERING, LLC
TBPE FIRM REG. NUMBER F-9369
PH: (956) 687-9421
FAX: (956) 687-3211
400 Nolana, Suite H2
McAllen, Texas 78504
www.chaninengineering.com

CITY OF McALLEN
SOFTBALL FIELD FACILITIES
MUNICIPAL PARK
McALLEN, TEXAS

HALFF
14800 ST. MARY'S LANE, SUITE 160
HOUSTON, TEXAS 77079-2943
TEL (281) 558-8700
FAX (281) 310-5259

Revision No.	Date	Description

STATE OF TEXAS
MIGUEL CHANIN
93127
LICENSED
PROFESSIONAL ENGINEER
7-11-18

100% CONSTRUCTION DOCUMENTS

Project No.:	17325
Issued:	07/11/2018
Drawn By:	LR
Checked By:	MC
Scale:	AS SHOWN
Sheet Title	DETAILS
Sheet Number	S5.01

MECHANICAL GENERAL LEGEND

DUCTWORK SYMBOLS

DESCRIPTION	SINGLE LINE	DOUBLE LINE
ACCESS DOOR	AD	AD
BACKDRAFT DAMPER	BDD	BDD
FIRE DAMPER	F	F
FLEXIBLE CONNECTION	FC	FC
MOTORIZED DAMPER	M	M
CONTROL DAMPER	CD M	CD M
VOLUME DAMPER, MANUAL	VD	VD
DUCT ELBOW WITH TURNING VANES		
DUCT SECTION – SUPPLY AIR		
DUCT SECTION – EXHAUST AIR		
DUCT SECTION – RETURN, OUTSIDE, OR RELIEF AIR		
DUCT, INCLINED DROP		
DUCT, INCLINED RISE		
FLEXIBLE DUCT – ROUND	8"ø	8"ø
DUCT TRANSITION	14/10 10/10	14/10 10/10
DUCT TRANSITION (SQUARE OR RECTANGULAR TO ROUND)	10/10 8"ø	12/12 8"ø
RECTANGULAR DUCT, SIZE IN INCHES, FIRST DIMENSION IS SIDE SHOWN (NET CLEAR INSIDE DIMENSION)	10/14	10/14
ROUND DUCT, DIAMETER IN INCHES (NET CLEAR INSIDE DIMENSION)	8"ø	8"ø
AIR FLOW IN DIRECTION OF ARROW		
45° BRANCH TAKE-OFFS		
CONICAL LATERAL BRANCH TAKE-OFFS		
CEILING SUPPLY DIFFUSERS		
CEILING RETURN GRILLE/REGISTER		
CEILING EXHAUST FAN (EF-_)		EF-_
CEILING EXHAUST GRILLE/REGISTER		
SIDEWALL SUPPLY GRILLE/REGISTER		
SIDEWALL RETURN/EXHAUST GRILLE/REGISTER		
EXTRACTOR		
DUCT TEE WITH SPLITTER DAMPER		
DOOR UNDERCUT	UC	UC
DOOR LOUVER	L	L

MISCELLANEOUS SYMBOLS

- P — DUCT STATIC PRESSURE SENSOR
- SD — DUCT SMOKE DETECTOR
- CO_2 — CARBON DIOXIDE SENSOR
- NEW CONNECTION TO EXISTING
- H — HUMIDISTAT
- RH — RELATIVE HUMIDITY SENSOR
- T — THERMOSTAT OR TEMPERATURE SENSOR (MOUNT 48" AFF)
- T — DUCT TEMPERATURE SENSOR
- TC — TIME CLOCK
- F — FREEZESTAT
- DIFFUSER, GRILLE OR REGISTER MARK
- 200 — AIR FLOW (CFM)
- 12 X 8 — RECTANGULAR FACE SIZE (WHERE APPLICABLE)
- DIRECTION OF SECTION
- 01 — IDENTIFYING NUMBER OR LETTER FOR SECTIONS.
- M2.01 — NUMBER OF REFERENCE DRAWING WHERE SECTION IS SHOWN.
- 01 — IDENTIFYING NUMBER OR LETTER FOR DETAILS.
- M2.01 — NUMBER OF REFERENCE DRAWING WHERE DETAIL IS SHOWN.
- ENLARGED DETAIL REFERENCE
- MATCHLINE
- LINE WITH HATCHING DESIGNATES DEMOLITION WORK

AIRFLOW DIAGRAM SYMBOLS

- C — COOLING COIL
- H C — HEATING COIL
- LOUVER
- BDD — BACKDRAFT DAMPER
- FD/SD — FIRE/SMOKE DAMPER
- A F M S — AIR FLOW MEASURING STATION
- M — MOTORIZED OPPOSED BLADE DAMPER
- M — MOTORIZED PARALLEL BLADE DAMPER
- FAN STARTER
- FAN
- FAN WITH ADJUSTABLE FREQUENCY MOTOR CONTROLLER

GENERAL ABBREVIATIONS

AAV	AUTOMATIC AIR VALVE
AFF	ABOVE FINISHED FLOOR
AFMS	AIR FLOW MEASURING STATION
AMB	AMBIENT
APD	AIR PRESSURE DROP
BD	BLOWDOWN
BF	BLIND FLANGE
BFP	BACKFLOW PREVENTER
BFV	BUTTERFLY VALVE
BHP	BRAKE HORSEPOWER
BLV	BALANCING VALVE
BOD	BOTTOM OF DUCT
BOP	BOTTOM OF PIPE
BOS	BOTTOM OF STEEL
BV	BALL VALVE
CAP	CAPACITY
CCMS	CENTRAL CONTROL MONITORING SYSTEM
CENT	CENTRIFUGAL
CMBST	COMBUSTION AIR
CL	CENTERLINE
CV	CONTROL VALVE OR CONSTANT VOLUME
CHWS	CHILLED WATER SUPPLY
CHWR	CHILLED WATER RETURN
D	DIFFUSER OR DAMPER
DB	DRY BULB
DEG	DEGREES
DIA	DIAMETER
DN	DOWN
DX	DIRECT EXPANSION
EAT	ENTERING AIR TEMPERATURE
EDB	ENTERING DRYBULB TEMPERATURE
EFF	EFFICIENCY
ENT	ENTERING
ESP	EXTERNAL STATIC PRESSURE
EWB	ENTERING WET BULB
EWT	ENTERING WATER TEMPERATURE
FCV	FLOW CONTROL VALVE
FLA	FULL LOAD AMP
FLEX	FLEXIBLE
FM	FLOW METER
FWL	FIXED WALL LOUVER
GR	GRILLE
GV	GATE VALVE
HZ	CYCLES PER SECOND (HERTZ)
kW	KILOWATT
LAT	LEAVING AIR TEMPERATURE
LDB	LEAVING DRYBULB TEMPERATURE
LWT	LEAVING WATER TEMPERATURE
MAX	MAXIMUM
MFR	MANUFACTURER
MIN	MINIMUM
MVD	MOTORIZED VOLUME DAMPER
MW	MAKE UP WATER
NC	NORMALLY CLOSED
NK	NECK
NO	NORMALLY OPEN OR NUMBER
NTS	NOT TO SCALE
OA	OUTSIDE AIR
OBD	OPPOSED BLADE DAMPER
PD	PRESSURE DROP
PH	PHASE
PI	PRESSURE INDICATOR
PRV	PRESSURE RELIEF VAVLE
PS	PRESSURE SENSOR
PSV	PRESSURE SAFETY VALVE
PTRV	PRESSURE TEMPERATURE RELIEF VALVE
PV	PLUG VALVE
PCW	PRIMARY CHILLED WATER
PCWS	PRIMARY CHILLED WATER SUPPLY
PCWR	PRIMARY CHILLED WATER RETURN
PCWP	PRIMARY CHILLED WATER PUMP
RED	REDUCER
REG	REGISTER
RH	RELATIVE HUMIDITY
RPM	REVOLUTIONS PER MINUTE
SA	SUPPLY AIR
SENS	SENSIBLE
SL	SOUND LINING
SD	SMOKE DETECTOR
SOV	SOLENOID OPERATED VALVE OR SHUT-OFF VALVE
SP	STATIC PRESSURE
SS	STAINLESS STEEL
SCW	SECONDARY CHILLED WATER
SCWS	SECONDARY CHILLED WATER SUPPLY
SCWR	SECONDARY CHILLED WATER RETURN
SCWP	SECONDARY CHILLED WATER PUMP
TOD	TOP OF DUCT
TOP	TOP OF PIPE
TOS	TOP OF STEEL
TS	TEMPERATURE SENSOR
TSTAT	THERMOSTAT
TSP	TOTAL STATIC PRESSURE
UNO	UNLESS NOTED OTHERWISE
VEL	VELOCITY
VFD	VARIABLE FREQUENCY DRIVE
VTR	VENT THROUGH ROOF
WB	WET BULB
WPD	WATER PRESSURE DROP
WTR	WATER
WxHxL	WIDTH BY HEIGHT BY LENGTH

EQUIPMENT ABBREVIATIONS

AHU	AIR HANDLING UNIT
AC	AIR CURTAIN
ACU	AIR CONDENSING UNIT
ACCU	AIR COOLED CONDENSING UNIT
AS	AIR SEPARATOR
B	BOILER
BCU	BLOWER COIL UNIT
CC	COOLING COIL
CF	CHEMICAL FEEDER
CH	CHILLER
CP	CONDENSOR PUMP
CRAC	COMPUTER ROOM AIR CONDITIONER
CRCU	COMPUTER ROOM CONDENSING UNIT
CT	COOLING TOWER
CWP	CHILLED WATER PUMP
EDH	ELECTRIC DUCT HEATER
DC	DUST COLLECTOR
EF	EXHAUST FAN
EH	ELECTRIC HEATER
ET	EXPANSION TANK
F	FILTER
FCU	FAN COIL UNIT
FCCU	FAN COIL CONDENSING UNIT
FPB	FAN POWER BOX
GFUH	GAS FIRED UNIT HEATER
HC	HOT WATER HEATING COIL
HWP	HOT WATER PUMP
OAH	OUTSIDE AIR HOOD
L	LOUVER
P	PUMP
PP	PRIMARY PUMP
PTAC	PACKAGE TERMINAL AIR CONDITIONING
RH	RELIEF HOOD
RHEF	RELIEF HOOD EXHAUST FAN
RTU	ROOF TOP UNIT
SDB	SINGLE DUCT BOX
SP	SECONDARY PUMP
ST	CHILLED WATER STORAGE TANK
VAV	VARIABLE AIR VOLUME BOX
VFD	VARIABLE FREQUENCY DRIVE

GENERAL MECHANICAL NOTES

1. INFORMATION ON THIS PLAN HAS BEEN OBTAINED FROM EXISTING DRAWINGS AND SITE SURVEY. CONTRACTOR SHALL FIELD VERIFY EXISTING CONDITIONS PRIOR TO COMMENCING WORK. ANY DISCREPANCIES BETWEEN EXISTING CONDITIONS AND CONSTRUCTION DOCUMENTS SHALL BE REPORTED IMMEDIATELY TO THE ENGINEER AND/OR ARCHITECT.
2. THE CONTRACTOR IS FULLY RESPONSIBLE FOR PERFORMING THE WORK IN FULL COMPLIANCE WITH ALL APPLICABLE LOCAL, STATE, AND FEDERAL CODES UNDER THIS SECTION OF THE CONTRACT. IF THE CONTRACTOR DETERMINES THAT THE CONTRACT DOCUMENTS AND PLANS ARE NOT IN COMPLIANCE WITH THE APPLICABLE LOCAL CODES, HE SHALL INFORM THE ARCHITECT PRIOR TO CONSTRUCTION START FOR DIRECTION. FAILURE TO DO SO SHALL NOT RELIEVE THE CONTRACTOR OF HIS RESPONSIBILITY TO MEET APPLICABLE LOCAL CODES, AND REWORK SHALL BE AT CONTRACTOR'S EXPENSE.
3. CONTRACTOR SHALL HANG AND INSTALL ALL DUCTWORK TIGHT WITH THE BUILDING STRUCTURE WHEN FEASIBLE TO ACCOMMODATE NEW CEILINGS. CONTRACTOR SHALL COORDINATE ALL INSTALLATION WORK WITH ARCHITECTURAL AND ELECTRICAL DESIGN. ALL DUCTWORK SHALL BE MODIFIED AS NECESSARY AND REQUIRED TO FIT AROUND BUILDING STRUCTURES, ARCHITECTURAL BUILD-OUT AND ELECTRICAL CABLE TRAY INSTALLATIONS. MECHANICAL CONTRACTOR SHALL FAMILIARIZE HIMSELF WITH THE WORK SCOPE OF OTHER TRADES AND PARTICIPATE IN COORDINATING ALL CONSTRUCTION EFFORTS.
4. CONTRACTOR SHALL INSTALL ALL EXHAUST SYSTEMS, INCLUDING FANS AND EXHAUST DUCTS. PROVIDE COMPLETE NEW SYSTEMS AS INDICATED.
5. CONTRACTOR SHALL PROVIDE ALL CEILING DIFFUSERS AS SHOWN. CONNECT EACH DIFFUSER TO THE MAIN DISTRIBUTION DUCT WITH A FLEX-DUCT SECTION; CONNECTIONS SHALL BE COMPLETED IN ACCORDANCE WITH THE DETAIL. EACH FLEX-DUCT CONNECTION SHALL INCLUDE A BUTTERFLY DAMPER TO BE INSTALLED AT THE TRUNK DUCT.
6. CONTRACTOR SHALL PROVIDE ALL DUCTWORK REQUIRED TO COMPLETE THE HVAC SYSTEM. TIE IN BRANCH DUCTS TO MAIN DUCTS WITH SHEET METAL FLANGES. FLANGE CONNECTION SHALL BE FASTENED WITH CRIMPED SHEET METAL STRIPS AND SEALED WITH SILICONE CAULK.
7. CONTRACTOR SHALL SUPPLY AND INSTALL FIRE DAMPERS AND ACCESS DOORS IN THE HORIZONTAL DUCTS WHERE THEY PENETRATE FIRE BARRIERS.
8. CONTRACTOR SHALL PROVIDE FIRE DAMPERS IN ALL DIFFUSERS AND GRILLES LOCATED IN FIRE RATED CEILINGS. ALL HALLWAY DIFFUSERS AND GRILLES SHALL BE INSTALLED WITH FIRE DAMPERS. ALL DIFFUSERS AND GRILLES SHOWN WITH A CIRCLED "F" SHALL BE EQUIPPED WITH FIRE DAMPERS.
9. ALL OPENINGS CUT IN MASONRY AND PLASTER WALLS OR CONCRETE FLOORS SHALL BE CORE DRILLED OR SAWED WHEN POSSIBLE. CONTRACTOR SHALL CHECK BUILDING CONSTRUCTION BEFORE MAKING PENETRATIONS TO AVOID CUTTING THROUGH STRUCTURAL BEAMS AND REINFORCING. CONTRACTOR SHALL INFORM THE ENGINEER IF REINFORCING IS CUT OR DAMAGED WHILE MAKING OPENINGS. CONTRACTOR SHALL REINFORCE ALL OPENINGS AS REQUIRED BY DRAWINGS AND SPECIFICATIONS. PATCH AND SEAL OPENINGS WITH 6000 PSI CEMENT GROUT. INSTALL DECORATIVE TRIM (EQUIPMENT FLANGES, FRAMING OR ESCUTCHEONS) AROUND OPENINGS IN FINISHED AREAS. COORDINATE ALL CUTTING AND PATCHING WITH THE OTHER TRADES.
10. ON ANY WORK SHOWN ON MECHANICAL DRAWINGS REQUIRING DEMOLITION OF EXISTING OR NEW BUILDING STRUCTURES AND FINISHES, IT SHALL BE THE RESPONSIBILITY OF THE CONTRACTOR TO COMPLETE THE NECESSARY DEMOLITION. CONTRACTOR SHALL PATCH AND REPAIR ALL DEMOLITION WORK. PATCHING SHALL BE COMPLETED WITH THE SAME MATERIALS AS THE SURROUNDING AREAS, OR WITH ARCHITECT-APPROVED PATCHING MATERIALS. REPAIRS SHALL BE COMPLETED ACCORDING TO ARCHITECTURAL SPECIFICATIONS. ALL REFINISHING SHALL BE APPROVED BY THE ARCHITECT.
11. CONTRACTOR SHALL BE RESPONSIBLE FOR COMPLETING THE INSTALLATION OF THE AIR DISTRIBUTION SYSTEM SHOWN. DUCTWORK, DUCT ACCESSORIES AND CONTROLS SHOWN AND REQUIRED SHALL BE SUPPLIED AND INSTALLED. ALL INSTALLATION WORK SHALL BE DONE IN ACCORDANCE WITH APPLICABLE CODES, INCLUDING NFPA 90A AND 90B.
12. CONTRACTOR SHALL BALANCE ALL AIR DISTRIBUTION SYSTEMS TO ACHIEVE THE AIR VOLUME REQUIREMENTS INDICATED. BALANCING SHALL INCLUDE ADJUSTMENT OF ALL MANUAL VOLUME DAMPERS, SPLITTER DAMPERS, ZONE DAMPERS (IF REQUIRED), AND BUTTERFLY DAMPERS. CONTRACTOR SHALL SUPPLY THE ENGINEER WITH A COMPLETE BALANCING REPORT WHICH INCLUDES VOLUME, ROOM REFERENCE AND ZONE VOLUME TOTALS.
13. MOUNT ALL THERMOSTATS (SENSORS) 48" ABOVE THE FINISHED FLOOR LEVEL UNLESS NOTED OTHERWISE THERMOSTATS SHOWN SHALL BE IN CONTROL OF THE ZONE SYSTEM WHICH IS SUPPLYING AIR TO THE AREA WHERE THE THERMOSTAT IS LOCATED. CONTRACTOR SHALL COORDINATE THE FINAL LOCATION OF EACH THERMOSTAT WITH THE ROOM FINISHES AND USES. CONTRACTOR SHALL SUPPLY AND INSTALL ALL CONTROL VOLTAGE WIRING AND CONDUIT FOR THERMOSTAT (DDC CONTROL) INSTALLATION.
14. CONTRACTOR SHALL COORDINATE THE FINAL LOCATIONS OF ALL CEILING DIFFUSERS WITH LIGHTING INSTALLATIONS AND ARCHITECTURAL REFLECTED CEILING PLANS. MOVE THE DIFFUSER LOCATIONS IF REQUIRED TO AVOID OBSTRUCTIONS FROM DUCTWORK AND LIGHT FIXTURES. COORDINATE RELOCATION WITH ENGINEER.
15. CONTRACTOR SHALL INSTALL NEW REFRIGERANT PIPING FLUSH WITH THE BUILDING STRUCTURE AND MECHANICAL ROOM BOUNDARIES AS SHOWN. CONTRACTOR SHALL COORDINATE ALL INSTALLATION WORK WITH DUCTS AND ELECTRICAL CONDUIT. MECHANICAL CONTRACTOR SHALL FAMILIARIZE HIMSELF WITH THE WORK SCOPE OF OTHER TRADES AND PARTICIPATE IN COORDINATING ALL CONSTRUCTION EFFORTS.
16. ALL PIPING SHALL BE INSULATED AND JACKETED. REFER TO THE SPECIFICATIONS. CONDENSER COILS ARE TO BE COATED IN ACCORDANCE WITH THE SPECIFICATIONS
17. VERIFY THE LOCATION OF ALL WALLS, PARTITIONS, DOORS, CABINETS, AND CEILINGS FROM ACTUAL FIELD MEASUREMENTS.
18. PROVIDE SMOKE DETECTOR AND SHUTDOWN CONTROLS ON AIR HANDLERS AND SUPPLY FANS. SMOKE DETECTORS SHALL BE PROVIDED, INSTALLED AND WIRED FOR SHUT DOWN BY DIVISION 16. PROVIDE BOTH SUPPLY AND RETURN SIDE DEVICES.

CITY OF MCALLEN
SOFTBALL FIELD FACILITIES
MUNICIPAL PARK
MCALLEN, TEXAS

McALLEN Parks & Recreation

HALFF
5900 WEST MILITARY, SUITE 100
MCALLEN, TEXAS 78503
TEL (956) 664-0286
FAX (956) 664-0292
TBPE FIRM #F-312

Revision No.	Date	Description

STATE OF TEXAS
HUGO H. AVILA
90071
LICENSED PROFESSIONAL ENGINEER
7-11-18

100% CONSTRUCTION DOCUMENTS

Project No.:	33348
Issued:	07-11-18
Drawn By:	K.G/J.B
Checked By:	H.A.
Scale:	AS NOTED
Sheet Title	MECHANICAL GENERAL NOTES

M0.01
Sheet Number

File Name: J:\33000s\33348\001\WEP\CADD\M0.01-GN-33348.dwg
Current Tab (Layout): M0.01 User: AH3047
Printed Date: 7/11/2018 11:41:29 AM

GENERAL NOTES:

A. REFER TO SHEET M0.01 FOR MECHANICAL GENERAL NOTES.

KEY NOTES:

1. ROUTE DUCT UP TO RELIEF HOOD.
2. MOUNT INTAKE GRILL IN SOFFIT PANEL. CUSTOM COLOR TO MATCH SOFFIT.
3. CONTRACTOR SHALL INSTALL CONDENSING UNIT ON WALL. TOP OF CONDENSING UNIT SHALL BE 1" BELOW SOFFIT. REFER TO SHEET M2.01 DETAIL 04.
4. CONTRACTOR SHALL INSTALL TIME CLOCK CONTROLLERS, ONE PER EXHAUST FAN, EQUAL TO TORK #DG100A. REFER TO ELECTRICAL SHEET E1.04

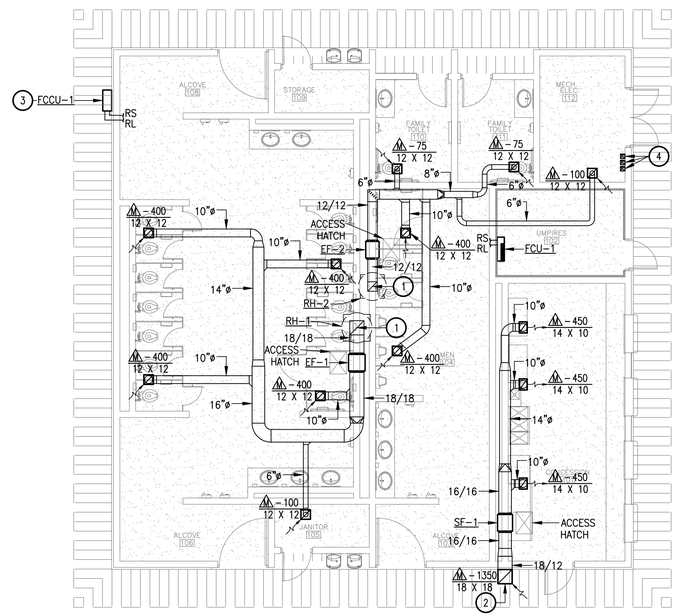

01 MECHANICAL PLAN

SCALE: 1/8" = 1'-0"

CITY OF MCALLEN
SOFTBALL FIELD FACILITIES
MUNICIPAL PARK
MCALLEN, TEXAS

McALLEN Parks & Recreation

HALFF

5900 WEST MILITARY, SUITE 100
MCALLEN, TEXAS 78503
TEL (956) 664-0286
FAX (956) 664-0292
TBPE FIRM #F-312

Revision		
No.	Date	Description

STATE OF TEXAS
HUGO H. AVILA
90071
LICENSED PROFESSIONAL ENGINEER
7-11-18

100% CONSTRUCTION DOCUMENTS

Project No.:	33348
Issued:	07-11-18
Drawn By:	K.G/J.B
Checked By:	H.A.
Scale:	AS NOTED
Sheet Title	MECHANICAL PLAN

M1.01
Sheet Number

File Name: i:\33000s\33348\001\MEP\CADD\M1.01-PL-33348.dwg
Current Tab (Layout): M1.01 User: AH3047
Printed Date: 7/11/2018 11:41:33 AM

FAN SCHEDULE

MARK	CFM	SERVICE	TYPE	RPM	EXT SP (IN WG)	MOTOR SIZE HP	BHP	DRIVE	VOLTAGE	MAX. SONES	WEIGHT (LBS)	MANUFACTURER	MODEL	NOTES
EF-1	1700	WOMENS	INLINE	1469	0.5	3/4	0.4	DIRECT	115	11.3	59	GREENHECK	SQ-130-VG	ALL
EF-2	1050	MENS/FAMILY/ELEC	INLINE	1558	0.5	1/4	0.2	DIRECT	115	9.2	45	GREENHECK	SQ-100-VG	ALL
SF-1	1300	CONCESSION	INLINE	1427	0.5	1/2	0.3	DIRECT	115	9.3	55	GREENHECK	SQ-120-VG	ALL

NOTES
1. FAN SHALL HAVE FACTORY INSTALLED, PRE-WIRED INTEGRAL DISCONNECT SWITCH FROM FACTORY.
2 FAN SHALL BE PROVIDED WITH FACTORY-MOUNTED SPEED CONTROL.
3. EACH FAN SHALL BE CONTROLLED THROUGH INDIVIDUAL TIME CLOCK. MODEL:TORK #DG100A. REFER TO ELECTRICAL PLANS.

GENERAL NOTES, TYPICAL OF ALL FANS:
A. CONTRACTOR SHALL CONFIRM DUCT PENETRATIONS, CURB DIMENSIONS, WEIGHT SHALL NOT EXCEED SCHEDULED PRODUCT.
B. ALL FANS INCLUDE DRIVE LOSSES. SUPPLIER SHALL PROVIDE DRIVE LOSS CALCULATIONS WITH EACH FAN DURING SUBMITTALS.
C. SOUND POWER LEVELS/SONES AND FAN RPM SHALL NOT EXCEED SCHEDULED VALUES.

GRILLE/DIFFUSER/REGISTER SCHEDULE

MARK	SERVICE	DESCRIPTION	MANUFACTURER MODEL NO.	MAX. NC. LEVEL (1)	REMARKS
M	EXHAUST	HEAVY DUTY SURFACE MOUNTED ALUMINUM EXHAUST GRILLE WITH 1/2" BLADE SPACING AND 0" FIXED DEFLECTION.	TITUS 60FL	30	COLOR BY ARCHITECT

F =THIS WILL DESIGNATE A STEEL FIRE RATED AIR DEVICE TYPE.

CBA = COLOR BY ARCHITECT

* = SEE ARCHITECTURAL DRAWINGS PROPER BORDER TYPES

AIR OUTLET DESIGNATION ON PLANS

MARK → A – 200 ← AIR FLOW (CFM
12 X 8 ← RECTANGULAR FACE SIZE (WHERE APPLICABLE

CAPACITY	FACE	NECK/FLEXIBLE CONNECTION
0–150	6 X 6	6"
151–285	9 X 9	8"
286–440	12 X 12	10"
441–550	12 X 12	12"
551–750	15 X 15	14"
750–1000	18 X 18	16"

NOTE: COORDINATE ALL AIR DEVICE TYPE WITH ARCHITECTURAL RCP.

WALL MOUNT SPLIT SYSTEM SCHEDULE

INDOOR UNIT MARK	FCU-1
INDOOR UNIT TYPE	WALL
MAX SUPPLY CFM	328
MINIMUM O/A (CFM)	N/A
ENTERING AIR (DB/WB)	80/67
TOTAL COOLING CAP. (BTUH)	10900
SENSIBLE COOLING CAP. (BTUH)	9480
HEATING CAPACITY (BTUH)	13500
VOLTAGE/PHASE	208-230/1
MCA	N/A
MAX. FUSE SIZE	N/A
MANUFACTURER	DAIKIN
MODEL NO.	FTX12NMVJU
WEIGHT (LBS)	18
CONDENSING UNIT MARK	FCCU-1
VOLTAGE/PHASE	208-230/1
MCA	12.2
MAX. FUSE SIZE	15
AMB. AIR TEMP. (CLG°F/HTG°F)	95/47
REFRIGERANT	R-410A
COOLING AMBIENT RANGE	(-4°F) – 115°F
HEATING MODE OPER. RANGE	5°F – 75°F
MANUFACTURER	DAIKIN
MODEL NO.	RX12NMVJU
WEIGHT (LBS)	60
SEER	19
HTG EFF. (HSPF)	8.5
MAX LINE LENGTH (FT)	66
MAX. VERTICAL RISE (FT)	49
NOTES	ALL

NOTES:
1. ELECTRICAL CONTRACTOR TO PROVIDE SINGLE CIRCUIT POWER FROM SERVICE TO OUTDOOR UNIT AND WIRE TO INDOOR UNIT.
2. PROVIDE INDOOR UNITS WITH MOUNTING BRACKETS IF REQUIRED.
3. PROVIDE CONDENSER COIL CORROSION PROTECTION.
4. CONTRACTOR TO PROVIDE PAD OR CURB FOR MOUNTING CONDENSING UNIT.
5. BOTH LIQUID AND SUCTION LINES MUST BE INSULATED (1/2" FLEXIBLE ELASTOMERIC IS ACCEPTABLE UNLESS INDICATED OTHERWISE IN SPECIFICATIONS).
6. SIGHT GLASSES, FILTER DRYERS, AND FIELD SUPPLIED EXPANSION VALVES ARE NOT TO BE USED.
7. PROVIDE INVERTER DRIVEN COMPRESSOR FOR IMPROVED HUMIDITY CONTROL.
8. INSTALL PER MANUFACTURERS INSTRUCTIONS AND PIPING RECOMMENDATIONS.
9. PROVIDE WALL MOUNTED AND WIRED 7-DAY PROGRAMMABLE T-STAT.
10. 2 YEAR PARTS & 10 YEAR COMPRESSOR PART WARRANTY

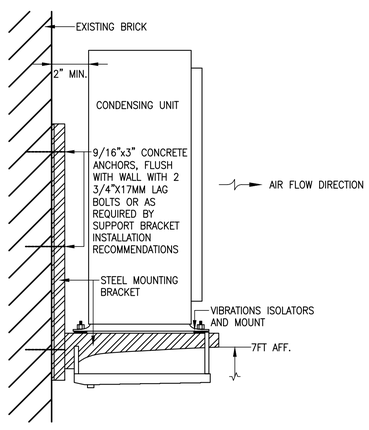

04 WALL MOUNTED CONDENSING UNIT
SCALE: N.T.S.

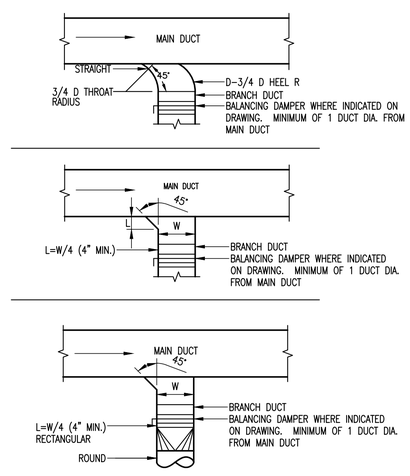

03 TYPICAL BRANCH CONNECTION
SCALE: N.T.S.

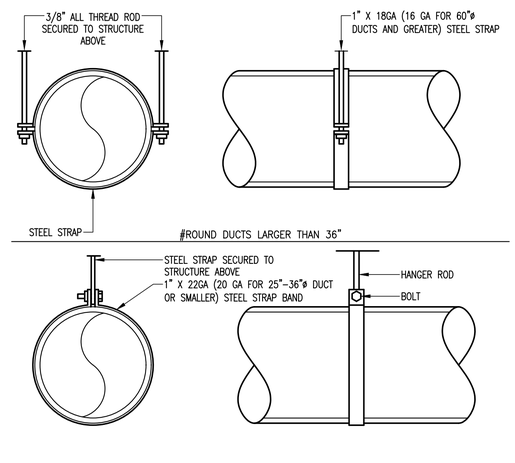

02 EXPOSED AND CONCEALED ROUND DUCT HANGER
SCALE: N.T.S

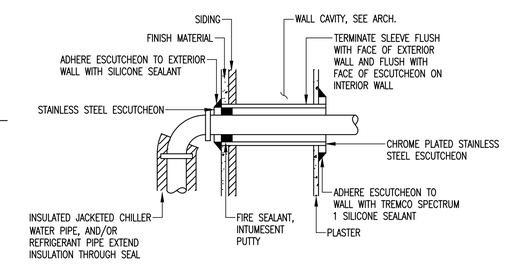

01 TYP. EXTERIOR WALL PENETRATION
SCALE: N.T.S.

CITY OF MCALLEN
SOFTBALL FIELD FACILITIES
MUNICIPAL PARK
MCALLEN, TEXAS

McALLEN Parks & Recreation

HALFF
5900 WEST MILITARY, SUITE 100
MCALLEN, TEXAS 78503
TEL (956) 664-0286
FAX (956) 664-0292
TBPE FIRM #F-312

Revision No.	Date	Description

STATE OF TEXAS
HUGO H. AVILA
90071
LICENSED PROFESSIONAL ENGINEER
7-11-18

100% CONSTRUCTION DOCUMENTS

Project No.:	33348
Issued:	07-11-18
Drawn By:	K.G/J.B
Checked By:	H.A.
Scale:	AS NOTED
Sheet Title	
MECHANICAL SCHEDULE	
M2.01	
Sheet Number	

File Name: I:\33000s\33348\001\MEP\CADD\M2.01-SC-33348.dwg
Current Tab (Layout): M2.01 User: Ali3047
Printed Date: 7/11/2018 11:41:49 AM

ELECTRICAL GENERAL LEGEND

ALL SYMBOLS SHOWN MAY NOT APPEAR IN ALL DRAWINGS.
SYMBOLS ARE SHOWN SCHEMATIC AND MAY NOT BE TO SCALE.

SYMBOL	DESCRIPTION	MTG. HT. UNO (SEE NOTE 1)
LIGHTING		
	2'x4' LAY-IN LUMINARY HATCHING = WITH EMERGENCY BATTERY PACK	REFER TO ARCH. CLG. PLAN
	2'x2' LAY-IN LUMINARY HATCHING = WITH EMERGENCY BATTERY PACK	REFER TO ARCH. CLG. PLAN
	STRIP LIGHT HATCHING = WITH EMERGENCY BATTERY PACK	REFER TO ARCH. CLG. PLAN
	SUSPENDED LINEAR LUMINARY	REFER TO ARCH. CLG. PLAN
	DOWNLIGHT HATCHING = WITH EMERGENCY BATTERY PACK	REFER TO ARCH. CLG. PLAN
	WALLPACK HATCHING = WITH EMERGENCY BATTERY PACK	REFER TO ARCH. CLG. PLAN
	EMERGENCY FIXTURE	9'-0" AFF U.N.O.
	POLE MOUNTED FIXTURE	REFER TO LUMINARIES SCHEDULE
	EXIT LIGHT, CEILING OR WALL MOUNTED – SHADING INDICATING SINGLE OR DOUBLE FACE; DIRECTIONAL ARROWS AS INDICATED	REFER TO ARCH. CLG. PLAN
$DX(XX)	DIGITAL SWITCH – BASIS OF DESIGN: Z MAX #ZMDSW-X-X X=SWITCH ID, XX=# OF BUTTONS	48" AFF
$D	DIMMER SWITCH	48" AFF
$	SINGLE POLE SWITCH	48" AFF
$3 / $4	3-WAY/4-WAY SWITCH	48" AFF
$T	TIMER SWITCH BASIS OF DESIGN: TORK #A530M W	48" AFF
$OC1	OCCUPANCY SENSOR (DUAL TECHNOLOGY WALL SWITCH SENSOR)	48" AFF
$OC2	OCCUPANCY SENSOR (DUAL TECHNOLOGY DUAL RELAY WALL SWITCH SENSOR)	48" AFF
$LX	LINE VOLTAGE KEY SWITCH : SINGLE	48" AFF
$LX3	LINE VOLTAGE KEY SWITCH : 3-WAY	48" AFF
$LX4	LINE VOLTAGE KEY SWITCH : 4-WAY	48" AFF
$W	WIRELESS SINGLE POLE SWITCH	–
OCS	CEILING MOUNT OCCUPANCY SENSOR (DUAL TECHNOLOGY SENSOR)	–
OCS	CORNER MOUNT OCCUPANCY SENSOR (DUAL TECHNOLOGY SENSOR)	48" AFF
SECURITY SYSTEM		
CR	CARD READER – ROUGH-IN ONLY	–
D	DOOR CONTACT – ROUGH-IN ONLY	–
DH	DOOR HOLDER – ROUGH-IN ONLY	–
DM	DOOR MONITOR – ROUGH-IN ONLY	–
G	GLASS BREAK SENSOR – ROUGH-IN ONLY	–
K	KEY PAD – ROUGH-IN ONLY	–
M	MOTION DETECTOR – ROUGH-IN ONLY	–
P	PANIC BUTTON – ROUGH-IN ONLY	–
RX	REQUEST-TO-EXIT BUTTON – ROUGH-IN ONLY	–
#	CAMERA, WALL MOUNT – ROUGH-IN ONLY	–
#	CAMERA, CEILING MOUNT – ROUGH-IN ONLY	–

SYMBOL	DESCRIPTION	MTG. HT. UNO (SEE NOTE 1)
POWER		
	SINGLE RECEPTACLE – 20A/125V/1P/3W/G NEMA 5-20R	15" AFF
	DUPLEX RECEPTACLE – 20A/125V/1P/3W/G NEMA 5-20R	15" AFF
30A	220 RECEPTACLE – 250V/2P/3W/G (RATING AS INDICATED)	15" AFF
WP	DUPLEX RCPT. GFI/WATER PROOF – 20A/125V/1P/3W/G NEMA 5-20R	15" AFF
	QUADRAPLEX RECEPTACLE (TWO DUPLEX RCPTS. UNDER ONE COVERPLATE)	15" AFF
	ISOLATED GROUND QUADRAPLEX RECEPTACLE (TWO DUPLEX RCPTS. UNDER ONE COVERPLATE)	15" AFF
	ISOLATED GROUND DUPLEX RECEPTACLE – 20A/125V NEMA 5-20R	15" AFF
E	DUPLEX RECEPTACLE ON EMERGENCY CIRCUIT	15" AFF
	FLOOR MOUNTED DUPLEX RECEPTACLE – FLUSH MOUNTED UNO	–
IG	ISOLATED GROUND FLOOR MOUNTED DUPLEX RECEPTACLE FLUSH MOUNTED UNO	–
	DUPLEX RCPT. SPLIT-WIRED – 20A/125V/1P/3W/G NEMA 5-20R	15" AFF
	SPECIAL PURPOSE RECEPTACLE (NEMA NO. OR RATING AS INDICATED)	15" AFF
J	JUNCTION BOX – SIZE & MOUNTING AS REQUIRED	15" AFF
	MULTIOUTLET ASSEMBLY – LENGTH AND OUTLET SPACING AS INDICATED	–
30/-/3	DISCONNECT SWITCH – 30/-/3 INDICATES 30A, 3-POLE, NONFUSED; 30/30/3 INDICATES 30A, 3-POLE, 30A FUSE	AS REQD.
30/3	CIRCUIT BREAKER DISCONNECT SWITCH – THERMAL MAGNETIC CB IN NEMA 1 ENCL; AMPS/POLES AS INDICATED	–
30/30/3	DISCONNECT SWITCH – 30/30/3 INDICATES 30A, 3-POLE, 30A FUSE	AS REQD.
2	MOTOR STARTER FVNR UNO; NUMBER INDICATES NEMA SIZE	AS REQD.
2	COMBINATION MOTOR CONTROLLER/DISCONNECT SWITCH	AS REQD.
	PANELBOARD	AS REQD.
	TRANSFORMER	–
	MOTOR	–
	SINGLE LINE CONTINUATION	–
	CIRCUIT HOME RUN TO PANELBOARD (2 #12, 1 #12G, 3/4"C. 20A/1P CB UNO)	–
X,X,X	THREE SINGLE POLE DEVICE CIRCUIT NUMBERS	–
X/X/X	MULTI-POLE DEVICE CIRCUIT NUMBERS	–

SYMBOL	DESCRIPTION	MTG. HT. UNO (SEE NOTE 1)
FIRE ALARM		
F	FIRE ALARM PULL STATION – ROUGH-IN ONLY	–
F	FIRE ALARM AUDIBLE/VISUAL SIGNAL – ROUGH-IN ONLY	48" AFF
F	FIRE ALARM AUDIBLE SIGNAL – ROUGH-IN ONLY	80" AFF
F	FIRE ALARM VISUAL SIGNAL – ROUGH-IN ONLY	80" AFF
FS	FIRE ALARM SPRINKLER FLOW SWITCH – ROUGH-IN ONLY	80" AFF
TS	FIRE ALARM SPRINKLER TAMPER SWITCH – ROUGH-IN ONLY	–
R	SPRINKLER SYSTEM REGULATOR RELAY	–
S	FIRE ALARM SMOKE DETECTOR CEILING OR WALL MOUNTED – ROUGH-IN ONLY	–
H	HEAT DETECTOR CEILING OR WALL MOUNTED – ROUGH-IN ONLY	80" AFF
	DUCT SMOKE DETECTOR – ROUGH-IN ONLY	–
FACP	FIRE ALARM CONTROL PANEL	–
FAAP	FIRE ALARM ANNUNCIATOR PANEL	–
F	FIRE ALARM BELL BUZZER	–
COMMUNICATION		
2/2	TELEPHONE/DATA OUTLET. WALL MOUNTED – STUB 3/4" C. ABOVE ACCESSIBLE CEILING	15" AFF
2	TELEPHONE OUTLET. WALL MOUNTED – STUB 3/4" C. ABOVE ACCESSIBLE CEILING	15" AFF
2	DATA OUTLET. WALL MOUNTED – STUB 3/4" C. ABOVE ACCESSIBLE CEILING	15" AFF
2/2	FLOOR MOUNTED TELEPHONE/DATA OUTLET – FLUSH MOUNTED UNO	–
2	FLOOR MOUNTED TELEPHONE OUTLET – FLUSH MOUNTED UNO	–
2	FLOOR MOUNTED DATA OUTLET – FLUSH MOUNTED UNO	–
SC	SOUND CONSOLE (RACK)	48" AFF
S S	P.A. SPEAKER, CEILING OR WALL MOUNTED	–
M M	MICROPHONE OUTLET	9" BFC, UNO
DBL	CLOCK – SINGLE OR DOUBLE FACE	–
W	WIRELESS ACCESS POINT	–
TV TV	TELEVISION OUTLET. CLG. OR WALL MOUNTED – STUB 3/4" C. ABOVE ACCESSIBLE CEILING	–
	PUSHBUTTON FOR INTERCOM CALL IN	–
	BUZZER/BELL	48" AFF
	TELEPHONE BOARD	–
	CABLE TRAY	–

GENERAL ABBREVIATIONS

ABS	ABOVE BACK SPLASH	F	FUSE	MTD	MOUNT OR MOUNTED	NL	NIGHT LIGHT	SW	SWITCH
AFF	ABOVE FINISHED FLOOR	G	GROUND (EQUIPMENT)	MTG	MOUNTING	NO (N.O.)	NORMALLY OPEN	UF	UNDERFLOOR
BFC	BELOW FINISHED CEILING	GFI	GROUND FAULT INTERRUPTER	NC (N.C.)	NORMALLY CLOSED	RCPT(S)	RECEPTACLE(S)	UG	UNDERGROUND
C	CONDUIT	GRC	GALVANIZED RIGID CONDUIT	NF	NONFUSED	PNL	PANEL	WG	WIRE GUARD
CB	CIRCUIT BREAKER	H	HORIZONTAL MOUNTING	NIC	NOT IN CONTRACT	SO (S.O.)	SPACE ONLY	WP	WEATHERPROOF
CLG	CEILING	IC	INTERRUPTING CAPACITY	TYP	TYPICAL	SP	SPARE	XFMR	TRANSFORMER
EC	EMPTY CONDUIT	IG	ISOLATED GROUND	EP	ELECTRICAL PRIMARY	ST (S.T.)	SHUNT TRIP	UNO	UNLESS NOTED OTHERWISE
EX	EXISTING								

NOTES:
1. 48" AFF INDICATES TO TOP OF DEVICE;
   15" AFF INDICATES TO BOTTOM OF DEVICE;
   ALL OTHER MOUNTING HEIGHTS REFER TO CENTERLINE OF DEVICE.

ELECTRICAL GENERAL NOTES

ELECTRICAL DEMOLITION NOTES

A. THE CONTRACTOR IS FULLY RESPONSIBLE FOR PERFORMING THE DEMOLITION WORK UNDER THIS SECTION OF THE PROJECT IN FULL COMPLIANCE WITH ALL APPLICABLE LOCAL, STATE, FEDERAL CODES. IF THE CONTRACTOR DETERMINES THAT THE CONTRACT DOCUMENTS AND PLANS ARE NOT IN COMPLIANCE WITH THE APPLICABLE CODES, HE SHALL INFORM THE ENGINEER PRIOR TO CONSTRUCTION START FOR DIRECTION. FAILURE TO DO SO SHALL NOT RELIEVE THE CONTRACTOR OF HIS RESPONSIBILITY TO MEET CODE REQUIREMENTS AND REWORK SHALL BE AT CONTRACTOR'S EXPENSE. APPLICABLE CODES AND STANDARDS ON DEMOLITION WORK SHALL INCLUDE THOSE PUBLISHED BY OSHA AND EPA. AN ASBESTOS SURVEY SHALL BE KEPT ON SITE AT ALL TIMES PER TEXAS DEPARTMENT OF HEALTH REQUIREMENTS.
B. ALL DUST PRODUCTION, SMOKE PRODUCTION AND NOISE SHALL BE SUBJECT TO REAL TIME REVIEW BY THE SCHOOL. WORK SHALL BE SHUT DOWN DURING CRITICAL ACTIVITIES BY FORMAL REQUEST FROM THE DESIGNATED AUTHORITY. WORK IN DUSTY AREAS SHALL BE CONTROLLED WITH TEMPORARY PARTITIONS. FLAME CUTTING SHALL BE MINIMIZED TO ELIMINATE SMOKE PRODUCTION. PROVIDE FIRE EXTINGUISHERS IN THE IMMEDIATE AREA.
C. FOR ANY WORK SHOWN ON ELECTRICAL DRAWINGS WHICH REQUIRES DEMOLITION OF BUILDING STRUCTURES AND FINISHES, IT SHALL BE THE RESPONSIBILITY OF THE CONTRACTOR TO COMPLETE THE NECESSARY DEMOLITION. CONTRACTOR SHALL PATCH AND REPAIR ALL BUILDING DAMAGE CREATED BY DEMOLITION WORK. PATCHING SHALL BE COMPLETED WITH THE SAME MATERIALS AS THE SURROUNDING AREAS, OR WITH OWNER APPROVED PATCHING MATERIALS.
D. ALL OPENINGS CUT IN MASONRY AND PLASTER WALLS OR CONCRETE FLOORS SHALL BE CORE-DRILLED OR SAWED WHEN POSSIBLE. PATCH AND SEAL OPENINGS WITH 8000 PSI CEMENT GROUT. INSTALL DECORATIVE TRIM (EQUIPMENT FLANGES, FRAMING, OR ESCUTCHEONS) AROUND OPENINGS IN FINISHED AREAS. COORDINATE ALL CUTTING AND PATCHING WITH THE OTHER TRADES.
E. ALL SURFACES COVERED BY "SPRAY POLY" AND PROTECTED BY TEMPORARY PARTITIONS SHALL REMAIN PROTECTED THROUGHOUT THE PROJECT. REMOVE THE PROTECTIVE BARRIERS ONLY AFTER THE NEW DEVICES, JUNCTION BOXES AND CONDUITS ARE INSTALLED. PATCH AND MAINTAIN THE PROTECTIVE BARRIERS DURING CONSTRUCTION. COVER ALL EQUIPMENT OPENINGS WITH 4 MIL. POLY AND DUCT TAPE IN PLACE.
F. CONTRACTOR SHALL KEEP THE ENTIRE MEP DEMOLITION SITE CLEAN AT ALL TIMES.
G. CONTRACTOR AND OWNER SHALL BE FULLY RESPONSIBLE TO IDENTIFY ANY AND ALL ASBESTOS PRESENT IN THE BUILDING PRIOR TO DEMOLITION AS REQUIRED BY LAW.
H. COORDINATION AMONG OTHER CONSTRUCTION DISCIPLINES PRIOR TO DEMOLITION IS MANDATORY.
I. ANY DAMAGE TO EXISTING FLOORING, DRAINAGE OR EXISTING STRUCTURES SHALL BE REPAIRED TO PRE-CONSTRUCTION CONDITION AT CONTRACTOR'S EXPENSE.
J. ALL DAMAGE TO BE REPAIRED AT CONTRACTOR'S EXPENSE. ALL COSTS FOR INTERRUPTION OF GAS, ELECTRICAL, COMMUNICATIONS AND/OR WATER SERVICE DUE TO CONTRACTOR'S WORK SHALL BE BORNE BY THE CONTRACTOR.
K. DEMOLITION, REMOVAL & DISPOSAL OF ALL EXCESS CONCRETE, RUBBLE, ETC. TO BE DONE IN A LEGAL MANNER AT CONTRACTOR'S EXPENSE.
L. CONTRACTOR SHALL REMOVE AND RETURN ANY AND ALL EXISTING EQUIPMENT/MATERIALS TO OWNER. OWNER SHALL HAVE FULL RIGHT OF OWNERSHIP UNLESS SPECIFIED OTHERWISE. IF THE OWNER WAIVES THIS OPTION, ANY EQUIPMENT, MATERIAL, ETC. SHALL BECOME THE PROPERTY OF THE CONTRACTOR.
M. ANY EXISTING ELECTRICAL EQUIPMENT TO BE RE-USED THAT GETS DAMAGED DURING DEMOLITION SHALL BE REPLACED WITH ONE OF EQUAL OR GREATER GRADE.

ELECTRICAL LIGHTING PLAN NOTES

A. REFER TO ARCHITECTURAL REFLECTED CEILING PLAN (RCP) FOR EXACT LOCATION OF LIGHT FIXTURES. FURNISH FIXTURES WITH TRIM COMPATIBLE WITH THE TYPE OF CEILING AS INDICATED ON THE RCP.
B. CONNECT EXIT/EMERGENCY LIGHTS AND EMERGENCY BALLASTS IN EMERGENCY LIGHTS IN EACH SPACE TO UNSWITCHED HOT LEG OF LOCAL LIGHTING CIRCUIT.
C. COORDINATE PLACEMENT OF FIXTURES WITH ACTUAL INSTALLATION OF MECHANICAL EQUIPMENT AND DUCTWORK.
D. WHERE DUAL LEVEL SWITCHING IS INDICATED IN A SPACE WITH 3-LAMP FLUORESCENT FIXTURES, PROVIDE BALLASTS IN ALL FIXTURES AND WIRING TO ALLOW FOR SWITCHING OF MIDDLE LAMPS INDEPENDENTLY OF OUTER LAMPS.
E. SWITCH LEGS ARE NOT SHOWN WHERE DIGITAL SWITCHES ARE USED TO CONTROL LIGHTS.
F. CONTRACTOR SHALL INCLUDE IN HIS BID TO OWNER THE COST OF ALL CONTROL PANELS, DEVICES, NETWORK CABLING AND LOW OR LINE VOLTAGE WIRING FOR A COMPLETE LIGHTING CONTROL SYSTEM AS SPECIFIED. REFER TO MANUFACTURERS WIRING DIAGRAMS AND INSTALLATION MANUALS PRIOR TO BID.
G. CONTROL SYSTEM FOR LIGHTING IS DESIGNED TO MEET 2009 INTERNATIONAL ENERGY CONSERVATION CODE. ALL LIGHT SWITCHES SHALL OPERATE AS BOTH MANUAL AND AUTOMATIC LINE VOLTAGE SWITCHES OR AS MOMENTARY DIGITAL SWITCHES IN CONJUNCTION WITH RELAY CONTROL PANELS, UNLESS OTHERWISE NOTED. REFER TO ELECTRICAL GENERAL LEGEND.
H. REFER TO LIGHTING CONTROL RELAY SCHEDULE FOR CIRCUITING OF LIGHT SWITCHES AND LIGHT FIXTURES THROUGH RELAYS IN LIGHTING RELAY PANELS.
I. ALL CONTROL AND POWER WIRING FOR LIGHTING CONTROL SYSTEM SHALL BE IN CONDUIT.
J. COORDINATE LOCATION OF LIGHTS WITH DIFFUSERS AND GRILLS.
K. USE #10 AWG CONDUCTORS FOR 20 AMPERE, 120 VOLT BRANCH CIRCUITS LONGER THAN 100 FEET.
L. USE #10 AWG CONDUCTORS FOR 20 AMPERE, 227 VOLT BRANCH CIRCUITS LONGER THAN 200 FEET.

ELECTRICAL POWER PLAN NOTES

A. MOUNTING HEIGHT OF DEVICES AS PER PROJECT SPECIFICATIONS UNLESS NOTED OTHERWISE.
B. COORDINATE ROUGH-IN LOCATION OF ALL DEVICES WITH ARCHITECTURAL ELEVATIONS DETAILS, AND PLANS.
C. REFER TO ARCHITECTURAL MILLWORK AND ELEVATION PLANS FOR EXACT LOCATION AND MOUNTING HEIGHT OF ALL WIRING DEVICES.
D. ALL PENETRATIONS THROUGH FIRE RATED WALLS SHALL HAVE SOUND RETARDING/ABSORBING FIRE STOP MATERIAL.
E. FURNISH AND INSTALL TV OUTLET AND TV RECEPTACLE IN SEPARATE BACKBOX AND WALL PLATE.
F. USE #10 AWG CONDUCTORS FOR 20 AMPERE, 120 VOLT BRANCH CIRCUITS LONGER THAN 100 FEET.

ELECTRICAL SPECIAL SYSTEMS PLAN NOTES

A. COORDINATE EXACT LOCATION AND MOUNTING HEIGHT OF ALL POWER SOURCE WIRING IN ACCORDANCE WITH ARCHITECTURAL MILLWORK. ALL INSTALLATIONS SHALL COMPLY WITH ADA REQUIREMENTS.
B. ELECTRICAL CONTRACTOR SHALL VERIFY ALL REQUIREMENTS BEFORE ANY ROUGH-IN IN ORDER TO COORDINATE MANUFACTURER'S DRAWINGS FOR EQUIPMENT LOCATION AND INSTALLATION ACCESSORIES.
C. COORDINATE RUNS FOR CONDUIT UP IN JOIST AND FOR SUSPENDING REQUIREMENTS IN ACCORDANCE WITH STRUCTURAL PLANS.
D. ALL FIRE ALARM, INTERCOM, DATA, AND TV DEVICES SHALL BE STUBBED UP TO ABOVE ACCESSIBLE CEILING AND TO CABLE TRAY IF PRESENT.
E. ALL PENETRATIONS THROUGH FIRE RATED WALLS SHALL HAVE SOUND RETARDING/ABSORBING FIRE STOP MATERIAL.
F. FURNISH AND INSTALL TV OUTLET AND TV RECEPTACLE IN SEPARATE BACKBOX AND WALL PLATE.
G. IF CABLE TRAY IS SHOWN ON PLANS, PROVIDE CABLE TRAY AS SPECIFIED IN PROJECT SPECIFICATIONS.
H. FURNISH DUCT SMOKE DETECTOR FOR RETURN DUCT. COORDINATE EXACT LOCATION IN ACCORDANCE MECHANICAL DRAWINGS.
I. ALL DEVICES SHOWN ON DRAWINGS ARE SYMBOLIC ONLY. THE ENTIRE FIRE ALARM SYSTEM SHALL BE IN FULL COMPLIANCE AND MEET ALL CODES AND REQUIREMENTS OF THE LOCAL ADMINISTRATIVE AUTHORITY. ANY MODIFICATIONS REQUIRED TO PROVIDE COMPLIANCE SHALL BE MADE AT NO ADDITIONAL COST TO THE OWNER OR ARCHITECT/ENGINEER.
J. FIRE ALARM LICENSE HOLDER SHALL ASSUME ALL RESPONSIBILITY FOR DESIGN AND SUBMIT DRAWINGS TO AUTHORITY HAVING JURISDICTION (AHJ) AND ABIDE BY ALL OTHER REQUIREMENTS PER NFPA.
K. ALL CABLES ABOVE CEILING SHALL BE PLENUM RATED.
L. CONDUITS SHALL BE REAMED AND COMPLETED WITH CONNECTORS AND INSULATED BUSHINGS AT BOTH ENDS.
M. BETWEEN ANY TWO PULL POINTS THERE SHALL BE NO CONDUIT WITH GREATER THAN 180 DEGREES OF BENDS OR EQUIVALENT.
N. WHERE CONDUIT LENGTH EXCEEDS 100FT AND/OR TWO 90 DEGREE BENDS OR EQUIVALENT PROVIDE PULL BOXES AS REQUIRED.
O. ALL ZONE CONDUITS (HOME RUN) FOR LOW VOLTAGE COMMUNICATIONS CABLING SHALL BE MARKED AT THEIR TERMINUS WITH A TAG THAT IDENTIFIES "FIRE ALARM, DATA, INTERCOM, ETC" (ROOM NAME AND NUMBER) WHERE THE OTHER END OF THE CONDUIT TERMINATES.
P. FURNISH AND INSTALL 8'H X 4'W X 3/4"T VERTICALLY HUNG, GRADE AC, PLYWOOD IN COMMUNICATION ROOM AS INDICATED ON PLANS. PAINT PLYWOOD WITH TWO COATS OF FIRE RETARDANT TO MATCH EXISTING WALL FINISH. COORDINATE WITH ARCHITECT, PRIME CONTRACTOR, AND OWNER FOR INSTALLATION OF BACKBOARD. REFER TO DRAWINGS FOR PROPOSED LOCATION AND DETAILS.
G. THE CONTRACTOR SHALL INCLUDE IN HIS BID TO THE UNIVERSITY MATERIAL AND LABOR REQUIRED TO FURNISH AND INSTALL SMOKE DUCT DETECTORS TO THE AHU'S. FURNISH AND INSTALL TESTING SWITCH. FURNISH LABEL OF AHU SERVED TO EACH TESTING SWITCH.

ELECTRICAL SITE PLAN

A. ELECTRICAL CONTRACTOR SHALL CONTACT UTILITY COMPANY SERVICE REPRESENTATIVE AND COORDINATE SERVICE INSTALLATION PRIOR TO COMMENCING WORK.
B. ELECTRICAL CONTRACTOR SHALL INCLUDE IN HIS BID TO OWNER ALL FEES AND CONSTRUCTION COSTS CHARGED BY UTILITY COMPANY FOR MAIN LINE EXTENSIONS AND NEW SERVICE INSTALLATION.
C. ELECTRICAL CONTRACTOR SHALL COORDINATE SERVICE ENTRANCE REQUIREMENTS FOR TELEPHONE WITH LOCAL TELEPHONE SERVICE COMPANY PRIOR TO COMMENCING WORK.
D. ELECTRICAL CONTRACTOR SHALL PROVIDE FOUNDATIONS FOR ALL LIGHT POLES SHOWN ON DRAWINGS.
E. ELECTRICAL CONTRACTOR SHALL INSTALL ALL UNDERGROUND CONDUIT, CONDUCTORS, AND CABLE AS SPECIFIED IN PROJECT MANUAL.

CITY OF MCALLEN
SOFTBALL FIELD FACILITIES
MUNICIPAL PARK
MCALLEN, TEXAS

McALLEN Parks & Recreation

HALFF
5900 WEST MILITARY, SUITE 100
MCALLEN, TEXAS 78503
TEL (956) 664-0286
FAX (956) 664-0302
TBPE FIRM #F-312

Revision		
No.	Date	Description

STATE OF TEXAS
THOMAS E. DEARMIN
54352
REGISTERED PROFESSIONAL ENGINEER
7/11/18

100% CONSTRUCTION DOCUMENTS

Project No.:	33348
Issued:	07-11-18
Drawn By:	CHAVEZ/MG
Checked By:	TED
Scale:	AS NOTED
Sheet Title	ELECTRICAL LEGEND & NOTES

E0.01
Sheet Number

File Name: i:\33000s\33348\001\MEP\CADD\E001-GN-33348.dwg
Current Tab (Layout): E0.01 ELECTRICAL LEGEND & NOTES User: AH2522
Printed Date: 7/11/2018 12:04:43 PM

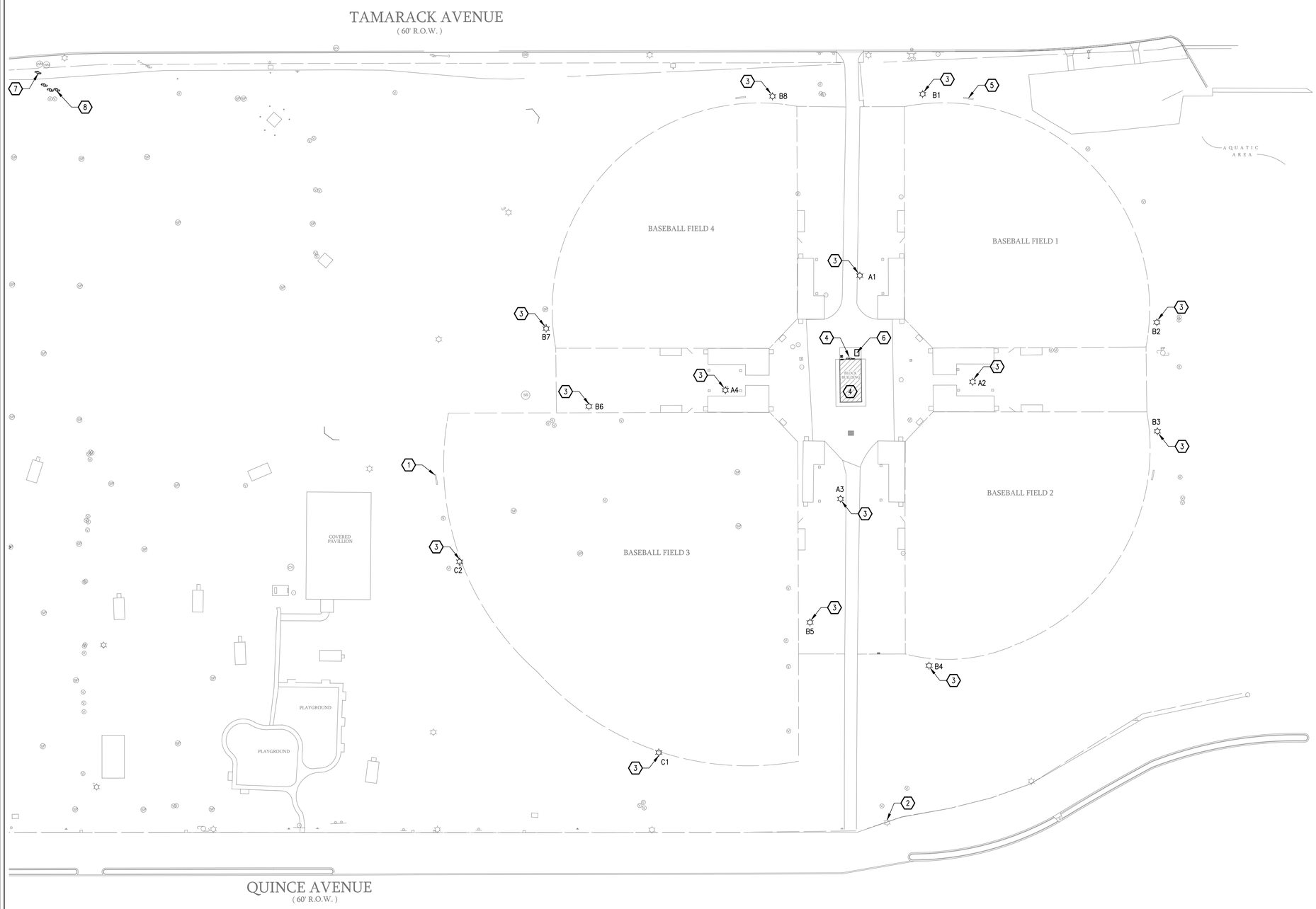

01 EXISTING ELECTRICAL DEMOLITION SITE PLAN

SCALE: 1"=50'

GENERAL NOTES:

A. REFER TO E001 FOR GENERAL NOTES.

B. AEP CONTACT PERSON: JUAN RAMOS – 956.460.6963.

DEMOLITION KEY NOTES:

1. EXISTING SCOREBOARD TO BE RELOCATED. REFER TO SHEET E100 AND E101 FOR NEW LOCATION AND CIRCUIT ROUTING.
2. EXISTING AEP AREA LIGHT TO BE RE–LOCATED BY AEP. CONTRACTOR SHALL COORDINATE NEW LOCATION WITH AEP.
3. EXISTING MUSCO POLE TO REMAIN.
4. EXISTING BUILDING TO BE DEMOLISHED UNDER SEPARATE CONTRACT. EXISTING ELECTRICAL EQUIPMENT TO BE SALVAGED BY CITY OF MCALLEN AND PROVIDED TO ELECTRICAL CONTRACTOR UNDER THIS CONTRACT FOR REINSTALLATION.
5. EXISTING SCORE BOARD TO BE DEMOLISHED.
6. EXISTING 150KVA UTILITY TRANSFORMER TO BE DEMOLISHED BY AEP. CONTRACTOR SHALL COORDINATE REMOVAL WITH UTILITY COMPANY. EXISTING CONCRETE PAD SHALL REMAIN.
7. DEMOLISH EXISTING DIP POLE WITH ELECTRIC METER AND LOAD CENTER.
8. DEMOLISH EXISTING WEATHER HEAD, ELECTRIC METER, AND SERVICE DISCONNECT ALONG WITH EQUIPMENT RACK.

CITY OF MCALLEN
SOFTBALL FIELD FACILITIES
MUNICIPAL PARK
MCALLEN, TEXAS

McALLEN Parks & Recreation

HALFF
5900 WEST MILITARY, SUITE 100
MCALLEN, TEXAS 78503
TEL (956) 664-0286
FAX (956) 664-0302
TBPE FIRM #F-312

Revision No.	Date	Description

STATE OF TEXAS
THOMAS E. DEARMIN
54352
REGISTERED PROFESSIONAL ENGINEER
7/11/18

100% CONSTRUCTION DOCUMENTS

Project No.:	33348
Issued:	07-11-18
Drawn By:	CHAVEZ/MG
Checked By:	TED
Scale:	AS NOTED
Sheet Title	EXISTING ELECTRICAL DEMOLITION SITE PLAN

ED1.00
Sheet Number

File Name: i:\33000s\33348\001\MEP\CADD\ED100-DP-33348.001.dwg
Current Tab (Layout): ED1.00 EXISTING ELECTRICAL DEMOLITION SITE PLAN User: AH2522
Printed Date: 7/11/2018 12:04:51 PM

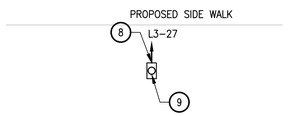

EMERGENCY CALL BOX #2 POWER ENLARGEMENT

02 SCALE: 1/4" = 1'-0"

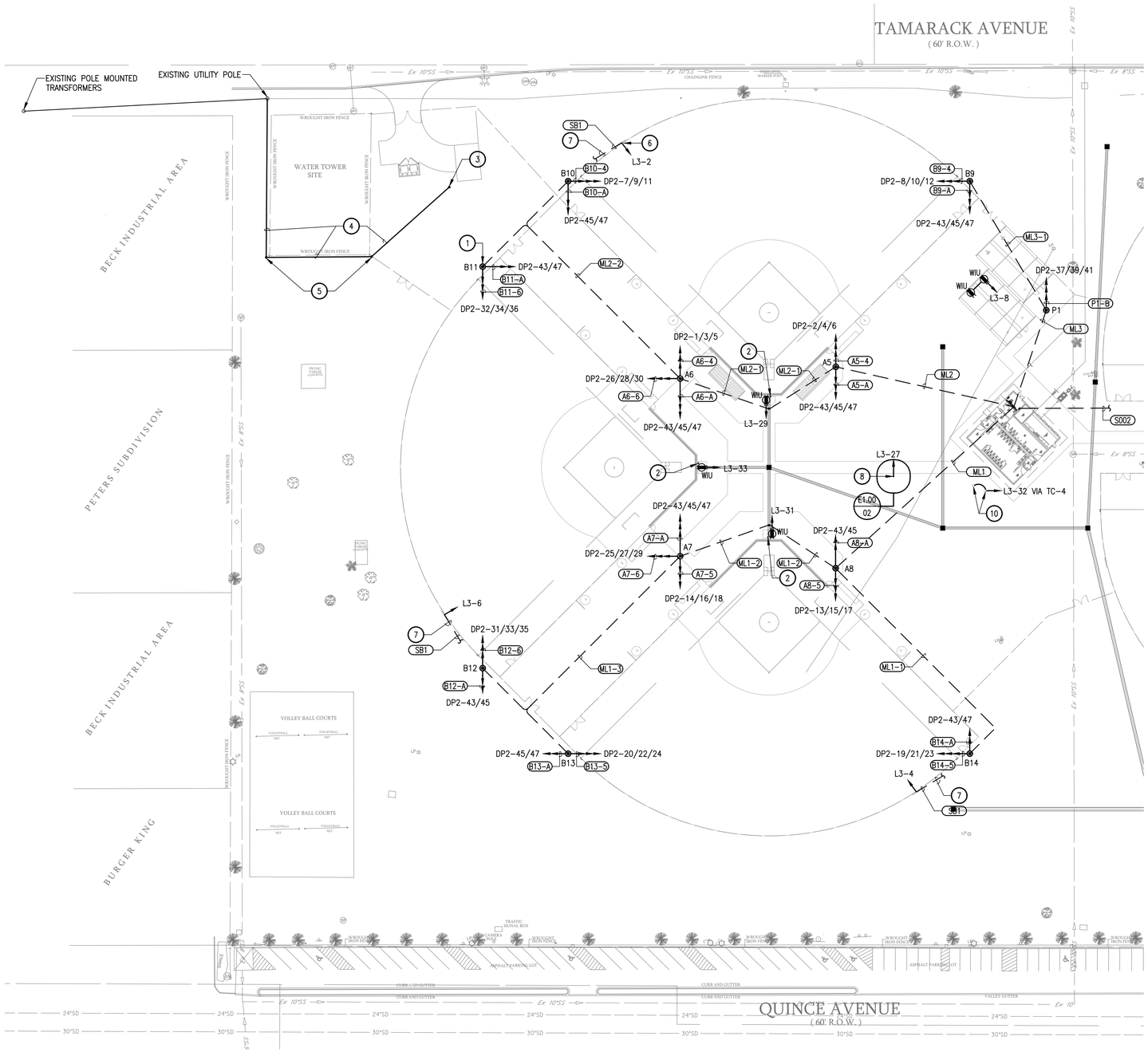

01 ELECTRICAL SITE PLAN - AREA 1

SCALE: 1"=50'

GENERAL NOTES:

A. REFER TO E001 FOR GENERAL NOTES.

B. COORDINATE EXACT LOCATION OF SPORTS LIGHTING POLES WITH SPORTS LIGHTING MANUFACTURER, CIVIL ENGINEER AND CITY OF MCALLEN PARKS & RECREATION DEPARTMENT, PRIOR TO COMMENCING WORK.

C. SPORTS LIGHTING CIRCUITS SHALL BE CONTROLLED VIA THE LIGHTING CONTROL EQUIPMENT FURNISHED BY MUSCO LIGHTING.

D. MUSCO TO FURNISH AND INSTALL POLES, POLE FOUNDATIONS, FIELD LIGHTS, BALLAST AND BOXES. MUSCO FURNISHES CONTROLS. MOUNTING AND WIRING BY ELECTRICAL CONTRACTOR. CITY OF MCALLEN WILL PURCHASE THE MUSCO EQUIPMENT AND INSTALLATION DIRECTLY AND NOT IN THIS CONTRACT.

E. AEP CONTACT PERSON: JUAN RAMOS – 956.460.6963.

KEY NOTES:

1. TYPICAL. NEW MUSCO LIGHTING POLE.
2. STUB 3/4" CONTROL CONDUIT 6"AFG AT SCOREKEEPER'S LOCATION AND ADJACENT TO RECEPTACLE DEVICE. CONDUIT SHALL TERMINATE AT SINGLE GANG BOX FOR INSTALLATION OF CONTROL RECEPTACLE PROVIDED WITH SCOREBOARD. MAKE FINAL CONNECTION TO CONTROL RECEPTACLE, REFER TO MANUFACTURER'S INSTALLATION INSTRUCTION FOR DETAILED CONTROL CABLING CONNECTIONS. CONDUIT SHALL BE ROUTED TO SCOREBOARD LOCATION.
3. ALTERNATE #1 – PROVIDE NEW 200/200/2, 240V, NEMA-3R SERVICE DISCONNECT FOR ELECTRICAL SERVICE TO NEW STORAGE BUILDING.
4. ALTERNATE #1 – EXTEND NEW 240V/120, 1PH OVERHEAD SERVICE TO NEW STORAGE BUILDING.
5. ALTERNATE #1 – NEW DIP POLES FOR EXTENSION OF SERVICE TO NEW STORAGE BUILDING.
6. PROVIDE NEW 120V ELECTRICAL CIRCUIT AND CONNECTION TO RELOCATED SCOREBOARD. REFER TO LANDSCAPE DRAWINGS FOR NEW SCOREBOARD LOCATION.
7. PROVIDE 3/4" PVC CONDUIT FOR SCOREBOARD CONTROL WIRING, REFER TO FEEDER SCHEDULE FOR NUMBER AND SIZE OF CONDUCTORS. COORDINATE ROUTING OF CONTROL CONDUIT WITH SITE LIGHTING TRENCHING AND ROUTE TO SCOREKEEPER'S LOCATION. REFER TO KEYNOTE #2.
8. EMERGENCY CALL BOX, ECB-2. FIELD VERIFY LOCATION WITH OWNER.
9. 3/4" STUB-UP FOR ECB-2.
10. PROVIDE QUANTITY (3) INGROUND LIGHT FIXTURES PER FLAG POLE, CAPABLE OF LIGHTING A 6'X10' FLAG AT 35'AFG. LIGHT FIXTURE SHALL BE IP68 RATED, 120 VOLTS WITH HIGH OUTPUT LEDS AND INTEGRAL DRIVER.

CITY OF MCALLEN
SOFTBALL FIELD FACILITIES
MUNICIPAL PARK
MCALLEN, TEXAS

McALLEN Parks & Recreation

HALFF
5900 WEST MILITARY, SUITE 100
MCALLEN, TEXAS 78503
TEL (956) 664-0286
FAX (956) 664-0302
TBPE FIRM #F-312

Revision		
No.	Date	Description

STATE OF TEXAS
THOMAS E. DEARMIN
54352
REGISTERED PROFESSIONAL ENGINEER
7/11/18

100% CONSTRUCTION DOCUMENTS

Project No.:	33348
Issued:	07-11-18
Drawn By:	CHAVEZ/MG
Checked By:	TED
Scale:	AS NOTED

Sheet Title

ELECTRICAL SITE PLAN - AREA 1

E1.00

Sheet Number

File Name: I:\33000s\33348\001\MEP\ADD\E100-ES-33348.dwg
Current Tab (Layout): E1.00 ELECTRICAL SITE PLAN – AREA 1 User: AH2522
Printed Date: 7/11/2018 12:05:04 PM

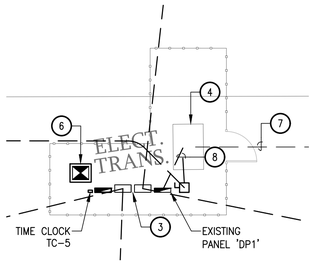

02 ENLARGED ELECTRICAL YARD
SCALE: 1"=10'

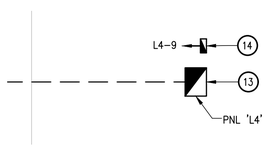

03 MOBILE STAGE DISTRIBUTION EQUIPMENT
SCALE: 1/4" = 1'-0"

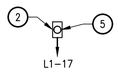

PROPOSED SIDE WALK

04 EMERGENCY CALL BOX #1 POWER ENLARGEMENT
SCALE: 1/4" = 1'-0"

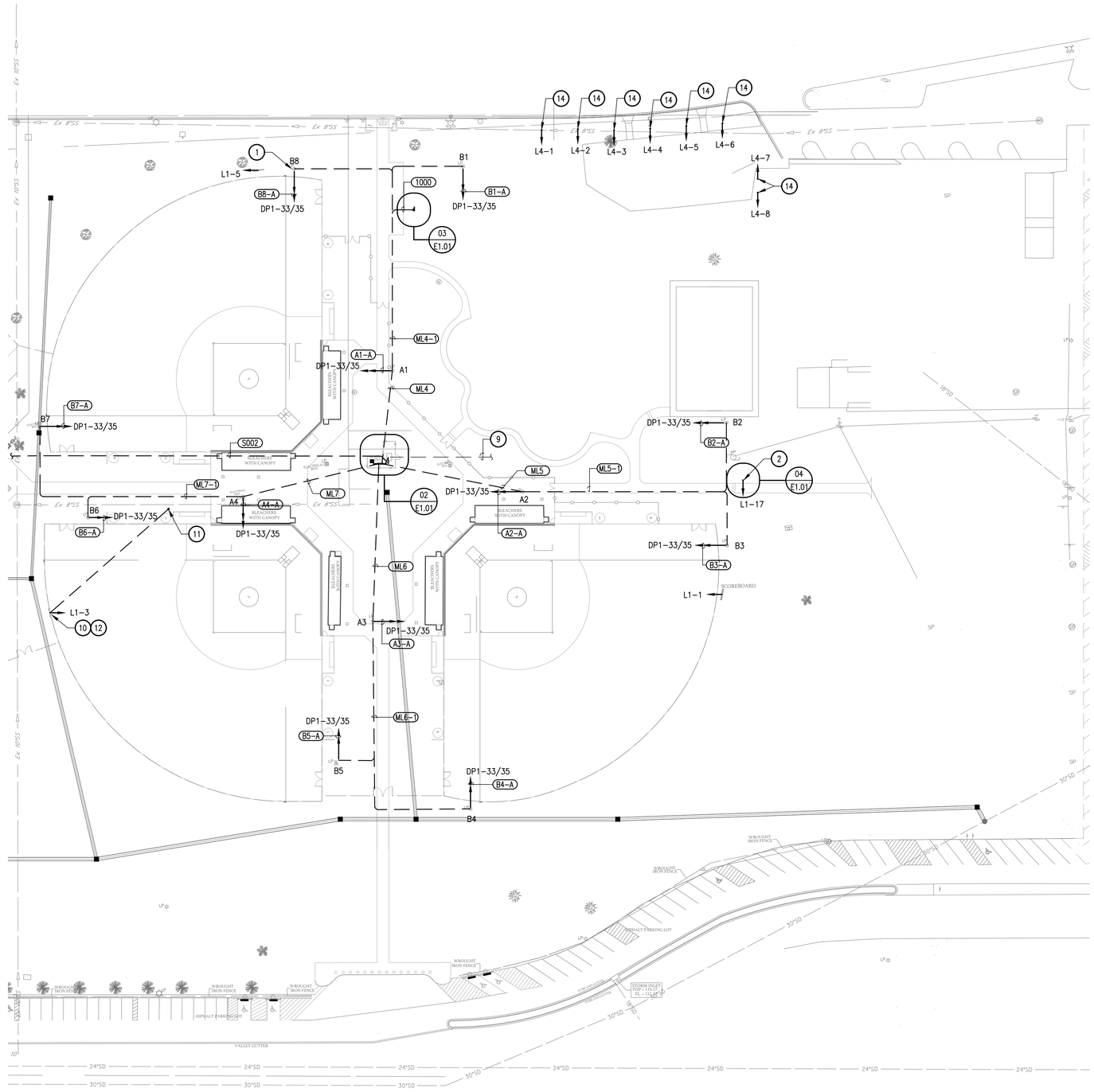

01 ELECTRICAL SITE PLAN - AREA 2
SCALE: 1"=50'

GENERAL NOTES:

A. REFER TO E001 FOR GENERAL NOTES.

B. COORDINATE EXACT LOCATION OF SPORTS LIGHTING POLES WITH SPORTS LIGHTING MANUFACTURER, CIVIL ENGINEER AND CITY OF MCALLEN PARKS & RECREATION DEPARTMENT, PRIOR TO COMMENCING WORK.

C. SPORTS LIGHTING CIRCUITS SHALL BE CONTROLLED VIA THE LIGHTING CONTROL EQUIPMENT FURNISHED BY MUSCO LIGHTING.

D. LOCATION OF RELOCATED MUSCO LIGHTING POLES SHALL BE COORDINATED WITH MUSCO LIGHTING PLANS AND THE CITY OF MCALLEN.

E. MUSCO TO FURNISH AND INSTALL POLES, POLE FOUNDATIONS, FIELD LIGHTS, BALLAST AND BOXES. MUSCO FURNISHES CONTROLS. MOUNTING AND WIRING BY ELECTRICAL CONTRACTOR. CITY OF MCALLEN WILL PURCHASE THE MUSCO EQUIPMENT AND INSTALLATION DIRECTLY AND NOT IN THIS CONTRACT.

F. UNLESS NOTED OTHERWISE EXISTING SCOREBOARDS SHALL REMAIN. CIRCUIT NUMBER SHOWN IS FOR RECONNECTION OF EXISTING CIRCUIT WIRING TO NEW BRANCH PANEL BOARD LOCATED AT EQUIPMENT RACK.

G. AEP CONTACT PERSON: JUAN RAMOS – 956.460.6963.

KEY NOTES: (f)

1. TYPICAL. EXISTING AND RELOCATED MUSCO LIGHTING POLE.
2. EMERGENCY CALL BOX ECB-1 APPROXIMATE LOCATION. VERIFY EXACT LOCATION ON CIVIL SITE PLAN.
3. PROVIDE NEW UNI-STRUT SUPPORT FOR EXISTING ELECTRICAL EQUIPMENT. REFER TO ELECTRICAL RISER DIAGRAM/NEW WORK ON SHEET E201.
4. NEW 300KVA UTILITY TRANSFORMER, COORDINATE ELECTRICAL SERVICE UPGRADE WITH UTILITY COMPANY.
5. 3/4" STUB-UP FOR ECB-1.
6. PROVIDE EXISTING LOW VOLTAGE TRANSFORMER WITH HOUSEKEEPING CONCRETE PAD. REFER TO CIVIL ENGINEERING DRAWINGS FOR FINAL PAD ELEVATION.
7. EXISTING PRIMARY CONDUIT BELOW GRADE TO REMAIN. FIELD VERIFY EXACT LOCATION OF PRIMARY CONDUIT.
8. INTERCEPT EXISTING SERVICE FEEDER BELOW GRADE AND EXTEND/REROUTE TO NEW LOCATION OF EXISTING DISTRIBUTION PANEL. FIELD VERIFY EXACT LOCATION OF SERVICE FEEDER.
9. EXISTING PRIMARY FEEDER EXTENDS TO BICENTENNIAL ROAD.
10. FIELD VERIFY ROUTING OF EXISTING 120V CIRCUIT TO EXISTING SCOREBOARD; INTERCEPT CONDUIT AND EXTEND NEW CONDUIT AND CIRCUIT WIRING TO NEW SCOREBOARD LOCATION, NEW CONDUIT AND CIRCUIT WIRING TO MATCH EXISTING. REFER TO LANDSCAPE DRAWINGS FOR NEW SCOREBOARD LOCATION.
11. ELECTRICAL JUNCTION BOX FOR ELECTRICAL CONDUIT ROUTING FOR RELOCATED SCOREBOARD. BASIS OF DESIGN: OLDCASTLE, SYNERTECH, DUO12X12 WITH TIER 15 COVER. REFER TO KEYNOTES 10 AND 12 FOR ADDITIONAL INFORMATION.
12. FIELD VERIFY ROUTING OF EXISTING CONTROL CONDUIT AND WIRING TO EXISTING SCOREBOARD; INTERCEPT CONDUIT AND EXTEND NEW CONDUIT AND EXISTING CONTROL WIRING TO NEW SCOREBOARD LOCATION, NEW CONDUIT TO MATCH EXISTING. REFER TO LANDSCAPE DRAWINGS FOR NEW SCOREBOARD LOCATION.
13. PROVIDE SENTRON POWER CENTER #1LPC025.
14. POWER OUTLET PEDESTAL. CONTRACTOR SHALL PROVIDE DIRECT BURIAL PEDESTAL, BASIS OF DESIGN: ARLINGTON #GPD19B COMPLETE WITH LEVITON NEMA-TT30R RECEPTACLE AND COVER PLATE. FEEDER: 2#6, 1#8G, 1-1/4" PVC CONDUIT.

CITY OF MCALLEN
SOFTBALL FIELD FACILITIES
MUNICIPAL PARK
MCALLEN, TEXAS

McALLEN Parks & Recreation

HALFF
5900 WEST MILITARY, SUITE 100
MCALLEN, TEXAS 78503
TEL (956) 664-0286
FAX (956) 664-0292
TBPE FIRM #F-312

Revision		
No.	Date	Description

STATE OF TEXAS
THOMAS E. DEARMIN
54352
REGISTERED PROFESSIONAL ENGINEER
7/11/18

100% CONSTRUCTION DOCUMENTS

Project No.:	33348
Issued:	07-11-18
Drawn By:	CHAVEZ/MG
Checked By:	TED
Scale:	AS NOTED
Sheet Title	
ELECTRICAL SITE PLAN - AREA 2	
E1.01	
Sheet Number	

File Name: I:\33000s\33348\001\MEP\CADD\E101-ES-33348.dwg
Current Tab (Layout): E1.01 ELECTRICAL SITE PLAN - AREA 2 User: AH2522
Printed Date: 7/11/2018 12:05:18 PM

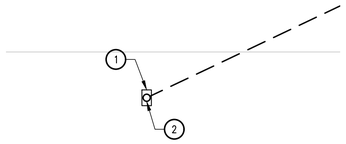

02 EMERGENCY CALL BOX #2 ENLARGEMENT

SCALE: 1/4" = 1'-0"

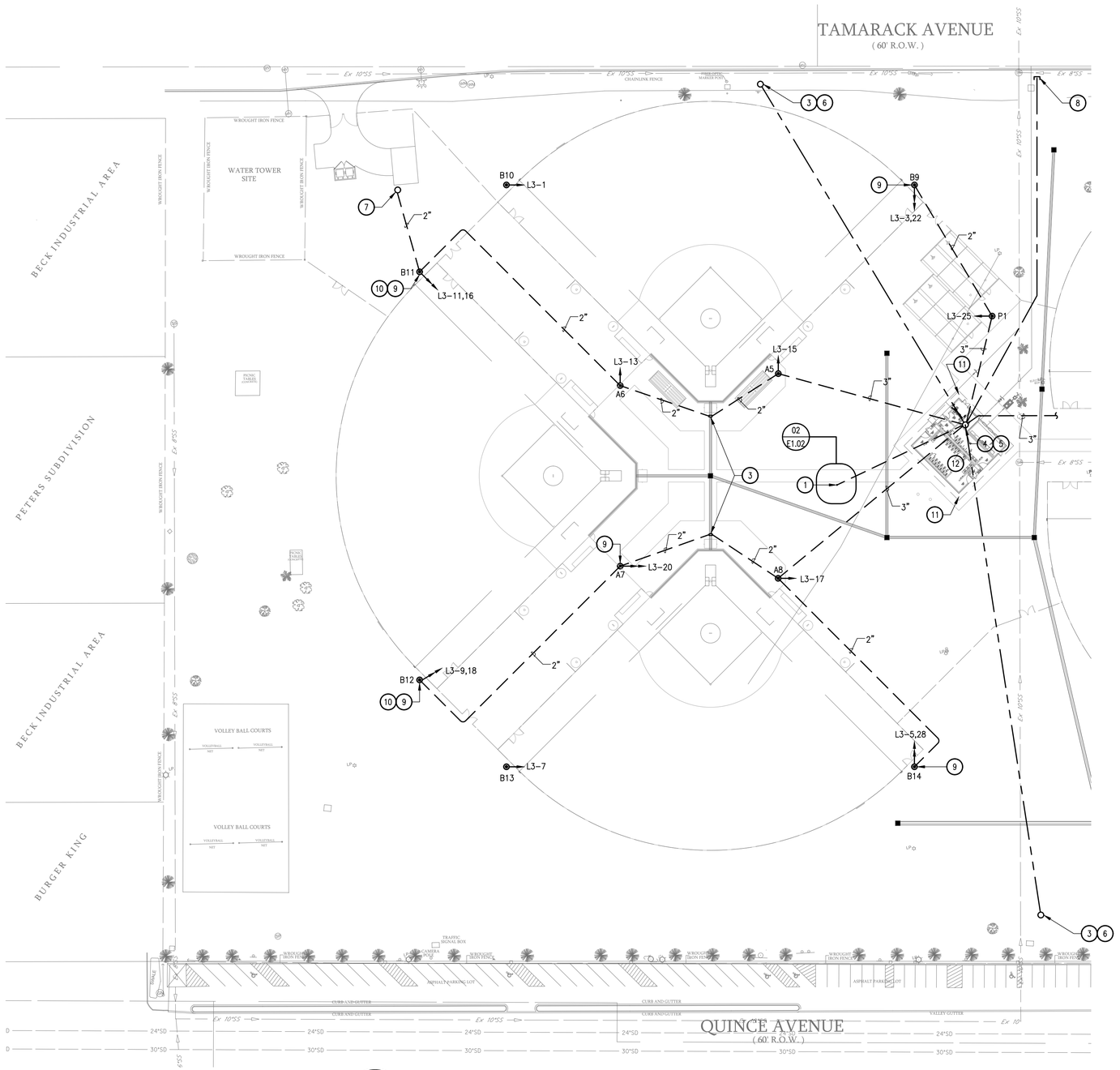

01 SECURITY SITE PLAN - AREA 1

SCALE: 1"=50'

GENERAL NOTES:

A. REFER TO E001 FOR GENERAL NOTES.

B. COORDINATE EXACT LOCATION OF SPORTS LIGHTING POLES WITH SPORTS LIGHTING MANUFACTURER, CIVIL ENGINEER AND CITY OF McALLEN PARKS & RECREATION DEPARTMENT, PRIOR TO COMMENCING WORK.

C. LIGHTING CIRCUITS SHALL BE CONTROLLED VIA THE LIGHTING CONTROL EQUIPMENT FURNISHED BY MUSCO LIGHTING.

D. MUSCO TO FURNISH AND INSTALL POLES, POLE FOUNDATIONS, FIELD LIGHTS, BALLAST AND BOXES. MUSCO FURNISHES CONTROLS. MOUNTING AND WIRING BY ELECTRICAL CONTRACTOR. CITY OF MCALLEN WILL PURCHASE THE MUSCO EQUIPMENT AND INSTALLATION DIRECTLY AND NOT IN THIS CONTRACT.

E. PROVIDE ALL COMMUNICATION CONDUIT WITH JETLINE. COORDINATE ALL COMMUNICATION CONDUIT WITH CITY OF MCALLEN IT DEPARTMENT FOR GIS RECORDING.

F. CONTRACTOR SHALL INCLUDE FIBER OPTIC CABLING INSTALLATION COST IN HIS BID. FIBER OPTIC CABLING PROVIDED BY CITY OF MCALLEN.

ELECTRICAL LEGEND:

— — — — PVC CONDUIT FOR DATA CABLE. FOLLOW SAME TRENCHING AS MUSCO LIGHTING POLE CONDUCTORS WHERE POSSIBLE.

— — — — (2) 4" PVC CONDUITS FOR FIBER FROM MAIN SERVICE LINE ON TAMARACK AVENUE TO NETWORK CABINET INSIDE UMPIRE'S ROOM.

— — — — (2) 4" PVC CONDUITS FOR FUTURE TELEPHONE SERVICE TO RESTROOM BUILDING. PROVIDE WITH PULL STRING.

KEY NOTES:

1. EMERGENCY CALL BOX, ECB-2. PROVIDED BY OWNER.
2. 2" STUB-UP FOR ECB-2.
3. 48"X48"X18" PULLBOX TIER 15 COVER, PULLBOX ENCLOSURE COVER SHALL HAVE ENGRAVED "FIBER OPTIC" WITH 2" LETTERSIZE.
4. APPROXIMATE LOCATION OF NETWORK CABINET. PROVIDED BY CITY OF McALLEN.
5. STUB-UP FOR NETWORK CABINET INSIDE UMPIRE'S ROOM.
6. APPROXIMATE LOCATION OF FIBER OPTIC MARKER. INTERCEPT WITH (2) 4" PVC CONDUITS WITH PULL STRING. COORDINATE WITH CITY OF McALLEN FOR EXACT LOCATION BEFORE COMMENCING EXCAVATION.
7. ALTERNATE #2 – 2" DATA CONDUIT STUB-UP FOR NEW MAINTENANCE BUILDING.
8. CAP LINE BELOW GRADE AT APPROXIMATE LOCATION SHOWN. COORDINATE FINAL LOCATION WITH OWNER.
9. VIDEO SURVEILLANCE CAMERA AND ACCESSORIES AT NEW MUSCO LIGHTING POLES. FURNISHED BY CITY OF McALLEN, INSTALLED BY CONTRACTOR. REFER TO DETAIL #2 IN SHEET E4.03. PROVIDE 24"X24"X18" PULLBOX TIER 15 COVER AT BASE OF POLE, PULLBOX ENCLOSURE COVER SHALL HAVE ENGRAVED "FIBER OPTIC" WITH 2" LETTERSIZE.
10. WIRELESS ACCESS POINT AND ACCESSORIES AT NEW MUSCO LIGHTING POLES. FURNISHED BY CITY OF McALLEN, INSTALLED BY CONTRACTOR.
11. VIDEO SURVEILLANCE CAMERA AND ACCESSORIES AT NEW CONCESSION BUILDING. FURNISHED BY CITY OF McALLEN, INSTALLED BY CONTRACTOR.
12. WIRELESS ACCESS POINT AND ACCESSORIES AT NEW CONCESSION BUILDING. FURNISHED BY CITY OF McALLEN, INSTALLED BY CONTRACTOR. REFER TO SHEET E1.04 VIEW 04

CITY OF MCALLEN
SOFTBALL FIELD FACILITIES
MUNICIPAL PARK
MCALLEN, TEXAS

McALLEN Parks & Recreation

HALFF
5900 WEST MILITARY, SUITE 100
McALLEN, TEXAS 78503
TEL (956) 664-0286
FAX (956) 664-0292
TBPE FIRM #F-312

Revision No.	Date	Description

STATE OF TEXAS
THOMAS E. DEARMIN
54352
REGISTERED PROFESSIONAL ENGINEER
7/11/18

100% CONSTRUCTION DOCUMENTS

Project No.:	33348
Issued:	07-11-18
Drawn By:	CHAVEZ/MG
Checked By:	TED
Scale:	AS NOTED
Sheet Title	SECURITY SITE PLAN - AREA 1

E1.02
Sheet Number

File Name: i:\33000s\33348\001\MEP\CADD\E102-ES-33348.dwg
Current Tab (Layout): E1.02 SECURITY SITE PLAN - AREA 1 User: AH2522
Printed Date: 7/11/2018 12:05:29 PM

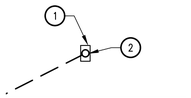

02 EMERGENCY CALL BOX #1 ENLARGEMENT
SCALE: 1/4" = 1'-0"

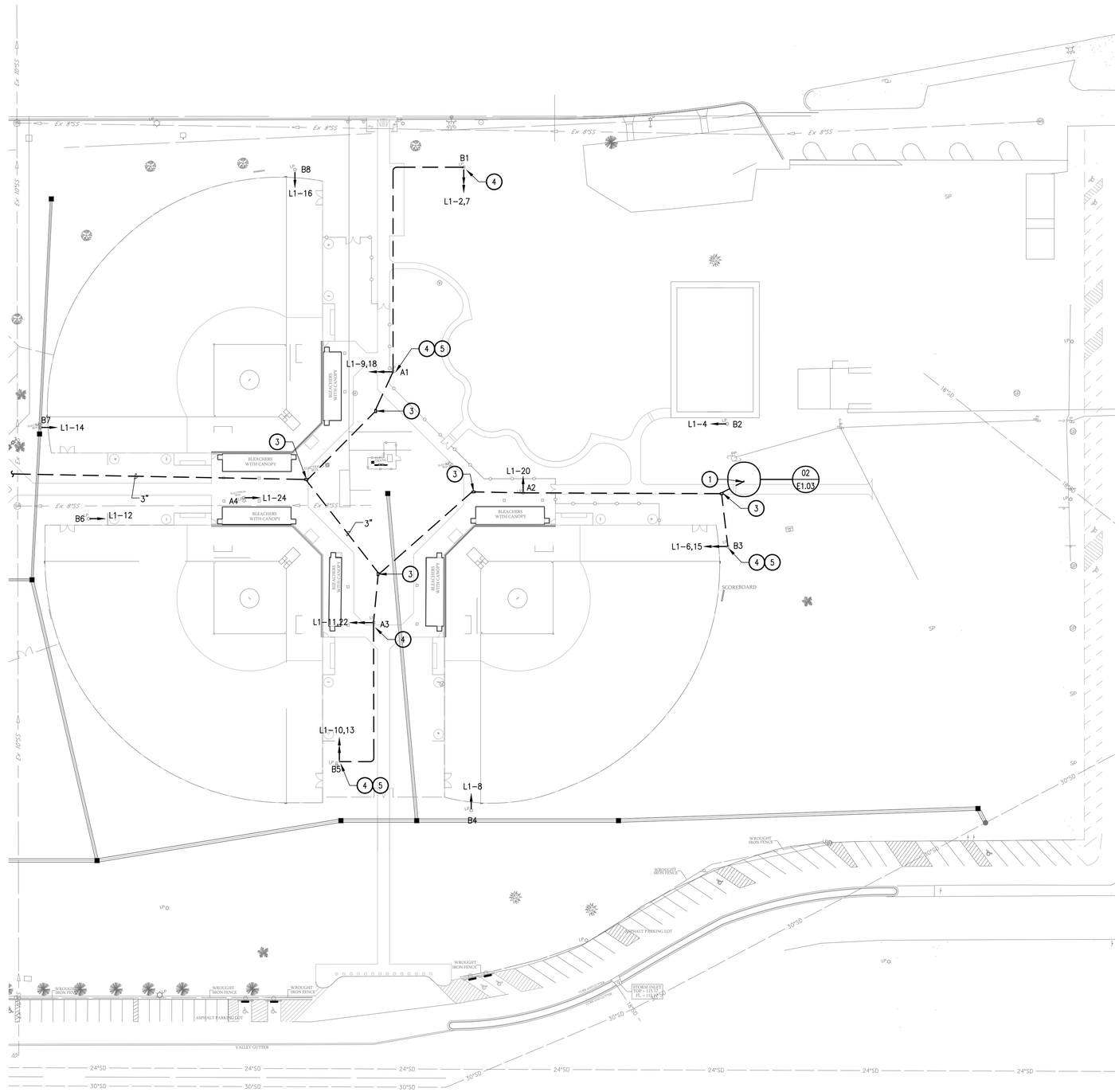

01 SECURITY SITE PLAN - AREA 2
SCALE: 1"=50'

GENERAL NOTES:

A. REFER TO E001 FOR GENERAL NOTES.

B. COORDINATE EXACT LOCATION OF SPORTS LIGHTING POLES WITH SPORTS LIGHTING MANUFACTURER, CIVIL ENGINEER AND CITY OF McALLEN PARKS & RECREATION DEPARTMENT, PRIOR TO COMMENCING WORK.

C. LIGHTING CIRCUITS SHALL BE CONTROLLED VIA THE LIGHTING CONTROL EQUIPMENT FURNISHED BY MUSCO LIGHTING.

D. MUSCO TO FURNISH AND INSTALL POLES, POLE FOUNDATIONS, FIELD LIGHTS, BALLAST AND BOXES. MUSCO FURNISHES CONTROLS. MOUNTING AND WIRING BY ELECTRICAL CONTRACTOR. CITY OF McALLEN WILL PURCHASE THE MUSCO EQUIPMENT AND INSTALLATION DIRECTLY AND NOT IN THIS CONTRACT.

E. PROVIDE ALL COMMUNICATION CONDUIT WITH JETLINE. COORDINATE ALL COMMUNICATION CONDUIT WITH CITY OF McALLEN IT DEPARTMENT FOR GIS RECORDING.

F. CONTRACTOR SHALL INCLUDE FIBER OPTIC CABLING INSTALLATION COST IN HIS BID. FIBER OPTIC CABLING PROVIDED BY CITY OF McALLEN.

ELECTRICAL LEGEND:

— — — — 2" PVC FOR DATA CABLE. FOLLOW SAME TRENCHING AS MUSCO LIGHTING POLE CONDUCTORS WHERE POSSIBLE.

KEY NOTES: (f)

1. EMERGENCY CALL BOX ECB-1. PROVIDED BY OWNER.
2. 2" STUB-UP FOR ECB-1.
3. 17"X30" PULLBOX, BASIS OF DESIGN: OLDCASTLE SYNERTECH COMPOSITE DUO 17X30 WITH TIER 15 COVER. PULLBOX ENCLOSURE COVER SHALL HAVE ENGRAVED "FIBER OPTIC" WITH 2" LETTERSIZE.
4. VIDEO SURVEILLANCE CAMERA AND ACCESSORIES AT EXISTING MUSCO LIGHTING POLES. FURNISHED BY CITY OF McALLEN, INSTALLED BY CONTRACTOR. REFER TO DETAIL #1 IN SHEET E4.03.
5. WIRELESS ACCESS POINT AND ACCESSORIES AT EXISTING MUSCO LIGHTING POLES. FURNISHED BY CITY OF McALLEN, INSTALLED BY CONTRACTOR.

CITY OF MCALLEN
SOFTBALL FIELD FACILITIES
MUNICIPAL PARK
MCALLEN, TEXAS

McALLEN Parks & Recreation

HALFF
5900 WEST MILITARY, SUITE 100
McALLEN, TEXAS 78503
TEL (956) 664-0286
FAX (956) 664-0292
TBPE FIRM #F-312

Revision		
No.	Date	Description

STATE OF TEXAS
THOMAS E. DEARMIN
54352
REGISTERED PROFESSIONAL ENGINEER
7/11/18

100% CONSTRUCTION DOCUMENTS

Project No.:	33348
Issued:	07-11-18
Drawn By:	CHAVEZ/MG
Checked By:	TED
Scale:	AS NOTED
Sheet Title	SECURITY SITE PLAN - AREA 2
Sheet Number	E1.03

File Name: I:\33000s\33348\001\WEP\CADD\E103-ES-33348.dwg
Current Tab (Layout): E1.03 SECURITY SITE PLAN - AREA 2 User: AH2522
Printed Date: 7/11/2018 12:05:38 PM

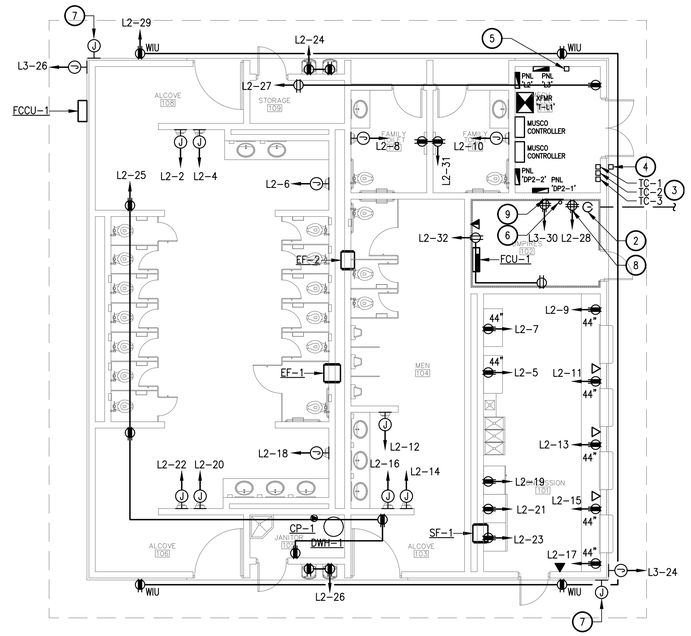

02 ELECTRICAL POWER PLAN - CONCESSION

SCALE: 1/8" = 1'-0"

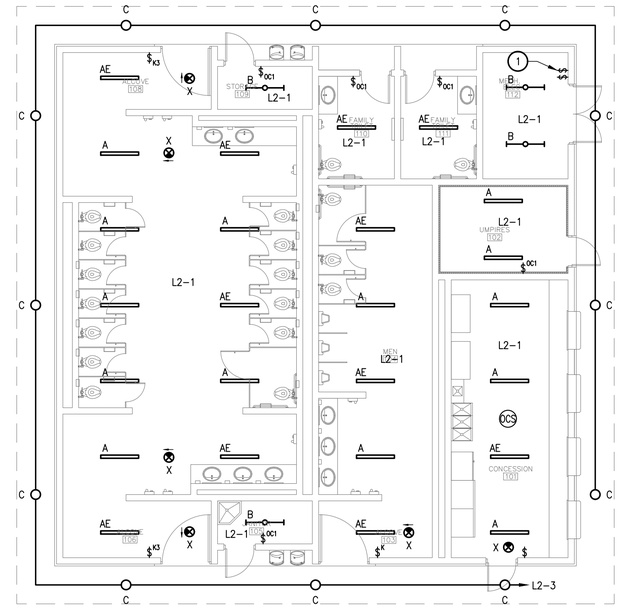

01 ELECTRICAL LIGHTING PLAN - CONCESSION

SCALE: 1/8" = 1'-0"

GENERAL NOTES:

A. REFER TO SHEET E001 FOR ELECTRICAL GENERAL NOTES.

B. REFER TO MECHANICAL EQUIPMENT CONNECTION SCHEDULE FOR ELECTRICAL CONNECTION TO MECHANICAL EQUIPMENT.

KEY NOTES:

1. PROVIDE DEDICATED LIGHT SWITCH FOR CONTROL OF CUPOLA LIGHTING. SWITCH SHALL BE WIRED TO OVERRIDE TIMECLOCK CONTROL OF EXTERIOR LIGHTS.
2. PROVIDE (2) 4"PVC CONDUITS AND STUB OUT FROM UMPIRE'S ROOM WITH PULL STRING. REFER TO SITE PLAN FOR LOCATION OF FIBER PEDESTAL.
3. TYPICAL OF ALL FANS. PROVIDE DIGITAL, SINGLE CHANNEL, 7 DAY PROGRAMMABLE TIME CLOCK WITH HOLIDAY SCHEDULING. BASIS OF DESIGN: TORK #DG100A.
4. PROVIDE WITH KNOX BOX.
5. PROVIDE ASTRONOMIC, DUAL CHANNEL, PROGRAMMABLE TIME CLOCK (TC-4) WITH HOLIDAY SCHEDULING AND PHOTOCELL INPUT. BASIS OF DESIGN: TORK #DGLC200A-NC FOR CONTROL EXTERIOR LIGHTING.
6. PROVIDE (2) 4" CONDUITS WITH PULL STRING AND STUB OUT OF BUILDING, BELOW GRADE. CONDUIT SHALL BE ROUTED TO EXISTING TELEPHONE PEDESTAL ON NORTH PROPERTY LINE. REFER TO SITE PLAN FOR ADDITIONAL INFORMATION.
7. PROVIDE RECESSED, DOUBLE GANG, WEATHER PROOF JUNCTION BOX AT BUILDING SOFFIT WITH 1/2"C STUBBED INTO ACCESSIBLE ATTIC SPACE. PROVIDE PULL STRING. BOX SHALL SERVE FOR CAMERA INSTALLATION.
8. COORDINATE QUAD RECEPTACLE LOCATION WITH CITY OF MCALLEN IT DEPARTMENT PRIOR TO ROUGH-IN. RECEPTACLE SHALL BE INSTALLED AT HEIGHT EQUAL TO COMMUNICATIONS RACK.
9. PROVIDE 2'x2'x3/4" PLYWOOD BOARD FOR TELEPHONE SERVICE DEMARC.

CITY OF MCALLEN
SOFTBALL FIELD FACILITIES
MUNICIPAL PARK
MCALLEN, TEXAS

McALLEN Parks & Recreation

HALFF
5900 WEST MILITARY, SUITE 100
MCALLEN, TEXAS 78503
TEL (956) 664-0286
FAX (956) 664-0202
TBPE FIRM #F-312

Revision		
No.	Date	Description

STATE OF TEXAS
THOMAS E. DEARMIN
54352
REGISTERED PROFESSIONAL ENGINEER
7/11/18

100% CONSTRUCTION DOCUMENTS

Project No.:	33348
Issued:	07-11-18
Drawn By:	CHAVEZ/MG
Checked By:	TED
Scale:	AS NOTED

Sheet Title

CONCESSION BUILDING ELECTRICAL PLANS

E1.04

Sheet Number

File Name: i:\33000s\33348\001\MEP\CADD\E104-EP-33348.dwg
Current Tab (Layout): E1.04 CONCESSION BUILDING ELECTRICAL PLANS User: AH2522
Printed Date: 7/11/2018 12:05:45 PM

GENERAL NOTES:

A. REFER TO E001 FOR GENERAL NOTES.

DEMOLITION KEY NOTES: (#)

1. EXISTING UTILITY TRANSFORMER TO BE REMOVED BY UTILITY COMPANY. CONTRACTOR SHALL COORDINATE REMOVAL.
2. EXISTING BUILDING MOUNTED ELECTRICAL EQUIPMENT TO BE SALVAGED BY CITY OF MCALLEN AND PROVIDED TO ELECTRICAL CONTRACTOR FOR REINSTALLATION. REFER TO NEW WORK ELECTRICAL RISER DIAGRAM FOR ADDITIONAL REQUIREMENTS.
3. EXISTING LOW VOLTAGE PANEL LOCATED INSIDE OF BUILDING TO BE DEMOLISHED UNDER SEPARATE CONTRACT.

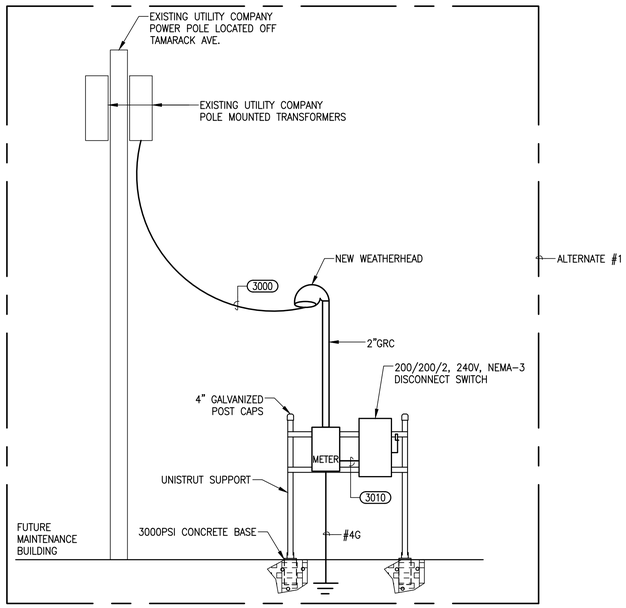

02 NEW POWER SERVICE FOR NEW MAINTENANCE BUILDING
N.T.S.

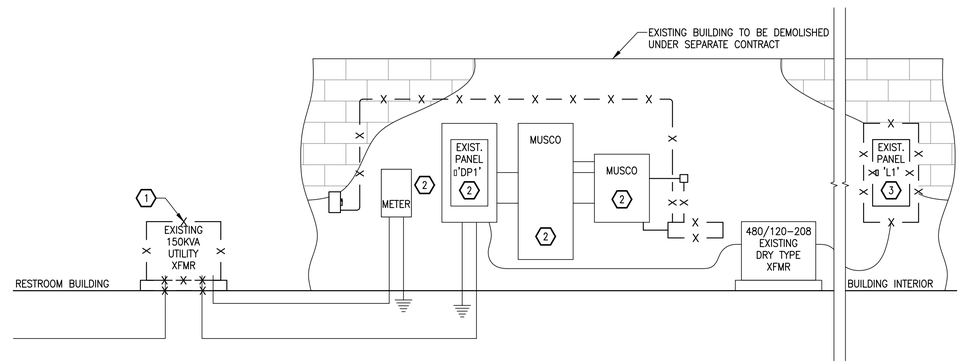

01 ELECTRICAL RISER DIAGRAM - DEMOLITION
N.T.S.

KEY NOTES: (#)

1. NEW UTILITY TRANSFORMER PROVIDED BY UTILITY COMPANY.
2. PROVIDE UNI-STRUT SUPPORT FOR PERMANENT INSTALLATION OF EXISTING ELECTRICAL EQUIPMENT. COORDINATE REQUIRED SIZE OF SUPPORT STRUCTURE WITH EXISTING ELECTRICAL EQUIPMENT, NEW SUPPORT FRAME TO EXTEND A MINIMUM OF 12" ON EITHER SIDE.
3. MOUNT EXISTING ELECTRICAL TO NEW UNI-STRUT SUPPORTS.
4. INSTALL NEW PANEL 'L1' AT EXTERIOR RACK. REFER TO SCHEDULE FOR PANEL INFORMATION.
5. ELECTRICAL PANEL BOARD, REFER TO PANEL SCHEDULES FOR PANEL CHARACTERISTICS.
6. NEW MUSCO CONTROLLERS.
7. PROVIDE ASTRONOMIC, SINGLE CHANNEL, PROGRAMMABLE TIME CLOCK (TC-5) WITH HOLIDAY SCHEDULING AND PHOTOCELL INPUT. BASIS OF DESIGN: TORK #DGLC100A-NC FOR CONTROL EXTERIOR LIGHTING CIRCUIT L1-19.

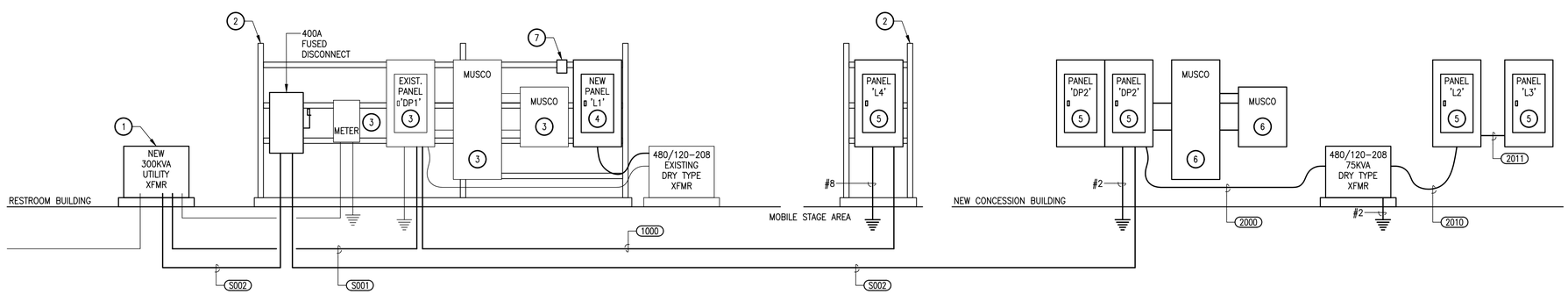

03 ELECTRICAL RISER DIAGRAM - NEW WORK
N.T.S.

CITY OF MCALLEN
SOFTBALL FIELD FACILITIES
MUNICIPAL PARK
MCALLEN, TEXAS

McALLEN Parks & Recreation

HALFF
5900 WEST MILITARY, SUITE 100
MCALLEN, TEXAS 78503
TEL (956) 664-0286
FAX (956) 664-0292
TBPE FIRM #F-312

Revision No.	Date	Description

STATE OF TEXAS
THOMAS E. DEARMIN
54352
REGISTERED PROFESSIONAL ENGINEER
7/11/18

100% CONSTRUCTION DOCUMENTS

Project No.:	33348
Issued:	07-11-18
Drawn By:	CHAVEZ/MG
Checked By:	TED
Scale:	AS NOTED
Sheet Title	ELECTRICAL RISER DIAGRAM

E2.01
Sheet Number

File Name: i:\33000s\33348\001\MEP\CADD\E201-RD-33348.dwg
Current Tab (Layout): E2.01 ELECTRICAL RISER DIAGRAM User: AH2522
Printed Date: 7/11/2018 12:05:56 PM

LIGHTING FIXTURE SCHEDULE

TYPE	MANUF & MODEL NUMBER	LAMPS	VA	VOLTAGE	DESCRIPTION	NOTES
A	KENALL – #MLHA8-48-F-MW-PP-45L40K-DCC-120	LED 4000K	45	120	4', LED, ROUGHT SERVICE, SURFACE MOUNTED STRIP LIGHT.	
AE	KENALL – #MLHA8-48-F-MW-PP-45L40K-DCC-120-LEL	LED 4000K	45	120	4', LED, ROUGHT SERVICE, SURFACE MOUNTED STRIP LIGHT. PROVIDE WITH EMERGENCY BATTERY PACK.	
B	LITHONIA – #ZL1N-L48-5000LM-L/LENS-MVOLT-40K-80CRI-GALV-WGZ48	LED 4000K	34	MVOLT	4', LED STRIPLIGHT WITH WIRE GUARD AND NO LENS. PROVIDE WITH HC36 CHAIN KIT, WGZ48 WIRE GUARD, AND EMERGENCY BATTERY PACK.	
C	LITHONIA – #LDN6 40/20 LO6AR 120	LED 4000K	36	120	6IN LDN, 4000K, 2000LM, 80CRI, CLEAR, SEMI-SPECULAR REFLECTOR WET LOCATION	
D	LITHONIA – #LDN6 40/06 LW6AR 120	LED 4000K	18	120	6IN LDN, 4000K, 600LM, 80CRI, CLEAR, SEMI-SPECULAR REFLECTOR WET LOCATION	
AA	LITHONIA #DSXO-LED-20C-700-AMBPC-T3M-208-RPA-PER-HS/DF POLE: KW #RTSP12-4.8-11-BRZ-DM10-BC	LED 4000K	45	120	LED PEDESTRIAN LIGHT.	
BB	KENALL – #FNL6-12-XX-SYM-12L40K-DCC-DV	LED 4000K	14	120	WALL MONTED LED STRIPLIGHT.	
X	LITHONIA – #LQM S W 3 R 120/277 EL N SD	INCLUDED	LED 6	120/277	POLYCARBONATE EMERGENCY EXIT LIGHT, LED LAMPS, SINGLE/DOUBLE FACE, PROVIDE WITH EMERGENCY BATTERY PACK	

MECHANICAL EQUIPMENT CONNECTION SCHEDULE

UNIT MARK	LOCATION	FED FROM	NOTES	DISCONNECTING MEANS AND/OR BRANCH CIRCUIT SIZE
RECIRCULATION PUMPS				
CP-1	STORAGE	L2-30	3	FEEDER: 2#12, 1#12G, 3/4"C
WATER HEATER				
DWH-1	STORAGE	L2-33/35	4	60/-/2, NEMA-3R, 240V DISCONNECT SWITCH. FEEDER: 2#8, 1#10G, 3/4"C
FANS				
EF-1	INLINE	L2-37	1	FEEDER: 3#12, 1#12G, 3/4"C (VIA TC-1)
EF-2	INLINE	L2-39	1	FEEDER: 3#12, 1#12G, 3/4"C (VIA TC-2)
SF-1	INLINE	L2-41	1	FEEDER: 3#12, 1#12G, 3/4"C (VIA TC-3)
HIGHWALL SPLIT SYSTEM				
FCU-1	INDOOR	L2-34/36	2	FEEDER: 2#12, 1#12G, 3/4"C
FCCU-1	OUTDOOR	L2-34/36	4	30/-/2, NEMA-3R, 240V DISCONNECT SWITCH. FEEDER: 2#12, 1#12G, 3/4"C

NOTES

1. ELECTRICAL CONTRACTOR SHALL CONNECT CIRCUIT TO INTEGRAL DISCONNECT ON UNIT.
2. EXTEND ELECTRICAL FEEDER FROM OUTDOOR UNIT TERMINAL BLOCK TO INDOOR UNIT. MAKE FINAL CONNECTIONS.
3. PROVIDE WITH MOTOR RATED SWITCH AND MOUNT SWITCH ON EQUIPMENT CABINET WITH FLEX CONNECTION TO FAN.
4. MOUNT DISCONNECT SWITCH ON WALL WITH FLEX, WATER TIGHT CONNECTION TO EQUIPMENT.

TRANSFORMER SCHEDULE

MARK	KVA	PRIMARY VOLTAGE	SECONDARY VOLTAGE	GROUNDING ELECTRODE	REMARKS
T-L1	75	480V DELTA	208Y/120 GND WYE	#2	0

CITY OF MCALLEN
SOFTBALL FIELD FACILITIES
MUNICIPAL PARK
MCALLEN, TEXAS

McALLEN Parks & Recreation

HALFF
5900 WEST MILITARY, SUITE 100
MCALLEN, TEXAS 78503
TEL (956) 664-0286
FAX (956) 664-0152
TBPE FIRM #F-312

Revision No.	Date	Description

STATE OF TEXAS
THOMAS E. DEARMIN
54352
REGISTERED PROFESSIONAL ENGINEER
7/11/18

100% CONSTRUCTION DOCUMENTS

Project No.:	33348
Issued:	07-11-18
Drawn By:	CHAVEZ/MG
Checked By:	TED
Scale:	AS NOTED
Sheet Title	ELECTRICAL SCHEDULES

E3.01
Sheet Number

File Name: i:\33000s\33348\001\MEP\CADD\E301-SC-33348.dwg
Current Tab (Layout): E3.01 ELECTRICAL SCHEDULES User: AH2522
Printed Date: 7/11/2018 12:06:06 PM

COMMUNICATION FEEDER SCHEDULE
(VERTICAL ROUTINGS NOT INCLUDED)

FROM:	TO:	DISTANCE IN FEET	COMMENTS
FIBER OPTIC MARKER POST	UMPIRE'S ROOM	324	2 PARALLEL CONDUITS
TELEPHONE SERVICE LINE	UMPIRE'S ROOM	297	2 PARALLEL CONDUITS
UMPIRE'S ROOM	MAINTENANCE BUILDING	582	----
UMPIRE'S ROOM	BASE OF POLE B14	552	CAMERA AND WIRELESS ACCESS POINT
UMPIRE'S ROOM	BASE OF POLE B13	567	CAMERA AND WIRELESS ACCESS POINT
UMPIRE'S ROOM	BASE OF POLE A9	349	CAMERA
UMPIRE'S ROOM	BASE OF POLE B11	389	CAMERA
UMPIRE'S ROOM	BASE OF POLE B10	237	CAMERA
UMPIRE'S ROOM	ECB-2	109	EMERGENCY CALL BOX PEDESTAL
UMPIRE'S ROOM	BASE OF POLE B1	638	CAMERA AND WIRELESS ACCESS POINT
UMPIRE'S ROOM	BASE OF POLE A1	395	CAMERA AND WIRELESS ACCESS POINT
UMPIRE'S ROOM	BASE OF POLE B5	633	CAMERA AND WIRELESS ACCESS POINT
UMPIRE'S ROOM	BASE OF POLE A3	415	CAMERA
UMPIRE'S ROOM	BASE OF POLE B3	744	CAMERA AND WIRELESS ACCESS POINT
UMPIRE'S ROOM	ECB-1	717	EMERGENCY CALL BOX PEDESTAL
APPROXIMATE HORIZONTAL FIBER OPTIC ROUTING:		6948	
		NOTE1: APPROXIMATE LINEAR FEET OF COMMUNICATION CONDUIT 3750FT	
		NOTE2: FOR USE BY CITY OF McALLEN TO ESTIMATE DATA CABLE	

FEEDER / BRANCH CIRCUIT SCHEDULE

MARK	RACEWAY	PHASE CONDUCTORS	NEUTRAL CONDUCTORS	GROUND CONDUCTORS	REMARKS
S001	2"	3#4/0	1#4/0	----	----
S002	2"	3#3/0	1#3/0	----	TWO PARRALLEL FEEDERS REQUIRED. PROVIDE (2) 2" CONDUITS AS SPARES FOR IRRIGATION CONTROLS.
1000	1"	2#3	1#3	----	----
2000	1 1/2"	3#1/0	----	1#6	----
2010	2 1/2"	3#4/0	1#4/0	1#4	----
2011	3/4"	3#8	1#8	1#10	----
3000	2"	2#3/0	1#3/0	----	----
3010	2"	2#3/0	1#3/0	1#6	----

LIGHTING BRANCH CIRCUIT SCHEDULE

MARK	*RACEWAY	PHASE CONDUCTORS	NEUTRAL CONDUCTORS	GROUND CONDUCTORS	REMARKS
A1-A	3/4"	2#12	----	1#12	----
A2-A	3/4"	2#12	----	1#12	----
A3-A	3/4"	2#12	----	1#12	----
A4-A	3/4"	2#12	----	1#12	----
A5-A	3/4"	3#12	----	1#12	----
A5-4	3/4"	3#12	----	1#12	----
A6-A	3/4"	3#12	----	1#12	----
A6-4	3/4"	3#12	----	1#12	----
A6-6	3/4"	3#12	----	1#12	----
A7-A	3/4"	3#12	----	1#12	----
A7-5	3/4"	3#12	----	1#12	----
A7-6	3/4"	3#12	----	1#12	----
A8-A	3/4"	2#12	----	1#12	----
A8-5	3/4"	3#12	----	1#12	----
B1-A	3/4"	2#12	----	1#12	----
B2-A	3/4"	2#12	----	1#12	----
B3-A	3/4"	2#12	----	1#12	----
B4-A	3/4"	2#12	----	1#12	----
B5-A	3/4"	2#12	----	1#12	----
B6-A	3/4"	2#12	----	1#12	----
B7-A	3/4"	2#12	----	1#12	----
B8-A	3/4"	2#12	----	1#12	----
B9-A	3/4"	3#12	----	1#12	----
B9-4	3/4"	3#8	----	1#10	----
B10-A	3/4"	2#12	----	1#12	----
B10-4	3/4"	3#12	----	1#12	----
B11-A	3/4"	2#12	----	1#12	----
B11-5	3/4"	3#10	----	1#10	----
B12-A	3/4"	2#12	----	1#12	----
B12-5	3/4"	3#8	----	1#10	----
B13-A	3/4"	2#12	----	1#12	----
B13-6	3/4"	3#8	----	1#10	----
B14-A	3/4"	2#12	----	1#12	----
B14-6	3/4"	3#8	----	1#10	----
P1-B	3/4"	3#12	----	1#12	----
ML1	x	x	x	x	INCLUDES TAG NUMBERS: A7-A,A7-5,A7-6,A8-A,A8-5,B12-A,B12-6,B13-A,B13-5,B14-A,B14-5
ML1-1	x	x	x	x	INCLUDES TAG NUMBERS: B14-A,B14-5
ML1-2	x	x	x	x	INCLUDES TAG NUMBERS: A7-A,A7-5,A7-6,B12-A,B12-6,B13-A,B13-5
ML1-3	x	x	x	x	INCLUDES TAG NUMBERS: B12-A,B12-6,B13-A,B13-5
ML2	x	x	x	x	INCLUDES TAG NUMBERS: A5-A,A5-4,A6-A,A6-4,A6-6,B10-A,B10-4,B11-A,B11-6
ML2-1	x	x	x	x	INCLUDES TAG NUMBERS: A6-A,A6-4,A6-6,B10-A,B10-4,B11-A,B11-6
ML2-2	x	x	x	x	INCLUDES TAG NUMBERS: B10-A,B10-4,B11-A,B11-6
ML3	x	x	x	x	INCLUDES TAG NUMBERS: B9-A,B9-4,P1-B
ML3-1	x	x	x	x	INCLUDES TAG NUMBERS: B9-A,B9-4
ML4	x	x	x	x	INCLUDES TAG NUMBERS: A1-A,B1-A,B8-A
ML4-1	x	x	x	x	INCLUDES TAG NUMBERS: B1-A,B8-A
ML5	x	x	x	x	INCLUDES TAG NUMBERS: A2-A,B2-A,B3-A
ML5-1	x	x	x	x	INCLUDES TAG NUMBERS: B2-A,B3-A
ML6	x	x	x	x	INCLUDES TAG NUMBERS: A3-A,B4-A,B5-A
ML6-1	x	x	x	x	INCLUDES TAG NUMBERS: B4-A,B5-A
ML7	x	x	x	x	INCLUDES TAG NUMBERS: A4-A,B6-A,B7-A
ML7-1	x	x	x	x	INCLUDES TAG NUMBERS: B6-A,B7-A

* RACEWAYS CAN BE COMBINED WHEN POSSIBLE WHERE CONDUIT ROUTING COINCIDES.

CITY OF MCALLEN
SOFTBALL FIELD FACILITIES
MUNICIPAL PARK
MCALLEN, TEXAS

McALLEN Parks & Recreation

HALFF
5900 WEST MILITARY, SUITE 100
McALLEN, TEXAS 78503
TEL (956) 664-0286
FAX (956) 664-0292
TBPE FIRM #F-312

Revision No.	Date	Description

STATE OF TEXAS
THOMAS E. DEARMIN
54352
REGISTERED PROFESSIONAL ENGINEER
7/11/18

100% CONSTRUCTION DOCUMENTS

Project No.:	33348
Issued:	07-11-18
Drawn By:	CHAVEZ/MG
Checked By:	TED
Scale:	AS NOTED
Sheet Title	ELECTRICAL SCHEDULES

E3.02
Sheet Number

File Name: i:\33000s\33348\001\MEP\CADD\E302-SC-33348.dwg
Current Tab (Layout): E3.02 ELECTRICAL SCHEDULES User: AH2522
Printed Date: 7/11/2018 12:06:13 PM

PANELBOARD 'DP2' - Section 1

VOLTAGE: 480Y/277 VOLT 3 PHASE 4 WIRE — LOCATION: ELECTRICAL ROOM
400A MAIN CIRCUIT BREAKER — MOUNTING: SURFACE
BUSES: MAIN – 400 A; NEUTRAL – 100%; EQUIPMENT GROUND — Isc = 14,000 A RMS SYM AVAILABLE

VA:L	VA:R	VA:O	LOAD	BKR	CKT	PH	CKT	BKR	LOAD	VA:L	VA:R	VA:O
3075			LTG: POLE A6 (FIELD 4)	20/3	1	A	2	20/3	LTG: POLE A5 (FIELD 4)	3075		
3075			"	–	3	B	4	–	"	3075		
3075			"	–	5	C	6	–	"	3075		
4100			LTG: POLE B10 (FIELD 4)	20/3	7	A	8	20/3	LTG: POLE B9 (FIELD 4)	4100		
4100			"	–	9	B	10	–	"	4100		
4100			"	–	11	C	12	–	"	4100		
3075			LTG: POLE A8 (FIELD 5)	20/3	13	A	14	20/3	LTG: POLE A7 (FIELD 5)	3075		
3075			"	–	15	B	16	–	"	3075		
3075			"	–	17	C	18	–	"	3075		
4100			LTG: POLE B14 (FIELD 5)	20/3	19	A	20	20/3	LTG: POLE B13 (FIELD 5)	4100		
4100			"	–	21	B	22	–	"	4100		
4100			"	–	23	C	24	–	"	4100		
3075			LTG: POLE A7 (FIELD 6)	20/3	25	A	26	20/3	LTG: POLE A6 (FIELD 6)	3075		
3075			"	–	27	B	28	–	"	3075		
3075			"	–	29	C	30	–	"	3075		

PANELBOARD 'DP2' - Section 2

4100			LTG: POLE B12 (FIELD 6)	20/3	31	A	32	20/3	LTG: POLE B11 (FIELD 6)	4100		
4100			"	–	33	B	34	–	"	4100		
4100			"	–	35	C	36	–	"	4100		
2050			LTG: POLE P1 (BATTING CAGES 1)	20/3	37	A	38	20/3	SPARE	0		
2050			"	–	39	B	40	–	"	0		
2050			"	–	41	C	42	–	"	0		
2576			LTG: POLES A5,A6,A7,A8,B9,B10,B11,B12,	20/3	43	A	44	150/3	PWR: 75KVA XFMR (PANEL 'L2')	2761	7560	9856
2576			B13,B14 (AREA LIGHTING)	–	45	B	46	–	"	360	6480	12665
2576			"	–	47	C	48	–	"	0	7380	12064
0			SPACE	–	49	A	50	–	SPACE	0		
0			SPACE	–	51	B	52	–	SPACE	0		
0			SPACE	–	53	C	54	–	SPACE	0		
0			SPACE	–	55	A	56	–	SPACE	0		
0			SPACE	–	57	B	58	–	SPACE	0		
0			SPACE	–	59	C	60	–	SPACE	0		

VA:L (LIGHTING)	146149	CONNECTED	182686	DEMAND
VA:R (RECEPTACLES)	21420	CONNECTED	15710	DEMAND
VA:O (OTHER)	34585	CONNECTED	34585	DEMAND
VA: TOTAL	202154	CONNECTED	232981	DEMAND
AMPS: TOTAL	243	CONNECTED	280	DEMAND

L	R	O		TOTAL			
50437	7560	9856	VA CONNECTED TO A PHASE	67853	VA =	245	AMPS CONNECTED TO A PHASE @ 277 VOLTS
48036	6480	12665	VA CONNECTED TO B PHASE	67181	VA =	243	AMPS CONNECTED TO B PHASE @ 277 VOLTS
47676	7380	12064	VA CONNECTED TO C PHASE	67120	VA =	242	AMPS CONNECTED TO C PHASE @ 277 VOLTS
146149	21420	34585	TOTAL	202154	VA		

EXISTING PANELBOARD 'DP1'

VOLTAGE: 480Y/277 VOLT 3 PHASE 4 WIRE — LOCATION: EXTERIOR BUILDING WALL
LUGS ONLY — MOUNTING: SURFACE
BUSES: MAIN – 225 A; NEUTRAL – 100%; EQUIPMENT GROUND

VA:L	VA:R	VA:O	LOAD	BKR	CKT	PH	CKT	BKR	LOAD	VA:L	VA:R	VA:O
0			LIGHTS, A1B CIRC. DP–1	20/2	1	A	2	20/2	LIGHTS, A3B CIRC. DP–2	0		
0			"	–	3	B	4	–	"	0		
0			LIGHTS, B1 CIRC. DP–3	30/2	5	C	6	20/2	LIGHTS, A4A CIRC. DP–4	0		
0			"	–	7	A	8	–	"	0		
0			LIGHTS, A2A CIRC. DP–5	20/2	9	B	10	30/2	LIGHTS, B5 CIRC. DP–6	0		
0			"	–	11	C	12	–	"	0		
0			LIGHTS, B2 CIRC. DP–7	30/2	13	A	14	40/2	LIGHTS, B6 CIRC. DP–8	0		
0			"	–	15	B	16	–	"	0		
0			LIGHTS, A2B CIRC. DP–9	20/2	17	C	18	30/2	LIGHTS, C1 CIRC. DP–10	0		
0			"	–	19	A	20	–	"	0		
0			LIGHTS, B3 CIRC. DP–11	30/2	21	B	22	30/2	LIGHTS, C2 CIRC. DP–12	0		
0			"	–	23	C	24	–	"	0		
0			LIGHTS, A3A CIRC. DP–13	20/2	25	A	26	20/2	LIGHTS, A1A CIRC. DP–14	0		
0			"	–	27	B	28	–	"	0		
0			LIGHTS, B4 CIRC. DP–15	30/2	29	C	30	20/2	LIGHTS, A4B CIRC. DP–16	0		
0			"	–	31	A	32	–	"	0		
0			SPARE	30/2	33	B	34	20/2	LIGHTS, B7 CIRC. DP–18	0		
0			"	–	35	C	36	–	"	0		
0			SPARE	30/2	37	A	38	20/2	LIGHTS, B8 CIRC. DP–20	0		
0			"	–	39	B	40	–	"	0		
0			TRANSFORMER	60/3	41	C	42	–	SPACE ONLY	0		
0			"	–	43	A	44	–	SPACE ONLY	0		
0			"	–	45	B	46	–	SPACE ONLY	0		
0			SPACE ONLY	–	47	C	48	–	SPACE ONLY	0		
0			SPACE ONLY	–	49	A	50	–	SPACE ONLY	0		
0			SPACE ONLY	–	51	B	52	–	SPACE ONLY	0		
0			SPACE ONLY	–	53	C	54	–	SPACE ONLY	0		

VA:L (LIGHTING)	0	CONNECTED	0	DEMAND
VA:R (RECEPTACLES)	0	CONNECTED	0	DEMAND
VA:O (OTHER)	0	CONNECTED	0	DEMAND
VA: TOTAL	0	CONNECTED	0	DEMAND
AMPS: TOTAL	0	CONNECTED	0	DEMAND

L	R	O		TOTAL			
0	0	0	VA CONNECTED TO A PHASE	0	VA =	0	AMPS CONNECTED TO A PHASE @ 277 VOLTS
0	0	0	VA CONNECTED TO B PHASE	0	VA =	0	AMPS CONNECTED TO B PHASE @ 277 VOLTS
0	0	0	VA CONNECTED TO C PHASE	0	VA =	0	AMPS CONNECTED TO C PHASE @ 277 VOLTS
0	0	0	TOTAL	0	VA		

EXISTING SPACES TO BE REPURPOSED

REVISED PANELBOARD 'DP1'

VOLTAGE: 480Y/277 VOLT 3 PHASE 4 WIRE — LOCATION: EXTERIOR RACK
LUGS ONLY — MOUNTING: SURFACE
BUSES: MAIN – 225 A; NEUTRAL – 100%; EQUIPMENT GROUND

VA:L	VA:R	VA:O	LOAD	BKR	CKT	PH	CKT	BKR	LOAD	VA:L	VA:R	VA:O
0			LIGHTS, A1B CIRC. DP–1	20/2	1	A	2	20/2	LIGHTS, A3B CIRC. DP–2	0		
0			"	–	3	B	4	–	"	0		
0			LIGHTS, B1 CIRC. DP–3	30/2	5	C	6	20/2	LIGHTS, A4A CIRC. DP–4	0		
0			"	–	7	A	8	–	"	0		
0			LIGHTS, A2A CIRC. DP–5	20/2	9	B	10	30/2	LIGHTS, B5 CIRC. DP–6	0		
0			"	–	11	C	12	–	"	0		
0			LIGHTS, B2 CIRC. DP–7	30/2	13	A	14	40/2	LIGHTS, B6 CIRC. DP–8	0		
0			"	–	15	B	16	–	"	0		
0			LIGHTS, A2B CIRC. DP–9	20/2	17	C	18	30/2	LIGHTS, C1 CIRC. DP–10	0		
0			"	–	19	A	20	–	"	0		
0			LIGHTS, B3 CIRC. DP–11	30/2	21	B	22	30/2	LIGHTS, C2 CIRC. DP–12	0		
0			"	–	23	C	24	–	"	0		
0			LIGHTS, A3A CIRC. DP–13	20/2	25	A	26	20/2	LIGHTS, A1A CIRC. DP–14	0		
0			"	–	27	B	28	–	"	0		
0			LIGHTS, B4 CIRC. DP–15	30/2	29	C	30	20/2	LIGHTS, A4B CIRC. DP–16	0		
0			"	–	31	A	32	–	"	0		
0			AREA LIGHTING SECTION 2	30/2	33	B	34	20/2	LIGHTS, B7 CIRC. DP–18	0		
0			"	–	35	C	36	–	"	0		
0	0	9900	PANEL 'L4'	90/2	37	A	38	20/2	LIGHTS, B8 CIRC. DP–20	0		
0	0	7920	"	–	39	B	40	–	"	0		
0			TRANSFORMER	60/3	41	C	42	–	SPACE ONLY	0		
0			"	–	43	A	44	–	SPACE ONLY	0		
0			"	–	45	B	46	–	SPACE ONLY	0		
0			SPACE ONLY	–	47	C	48	–	SPACE ONLY	0		
0			SPACE ONLY	–	49	A	50	–	SPACE ONLY	0		
0			SPACE ONLY	–	51	B	52	–	SPACE ONLY	0		
0			SPACE ONLY	–	53	C	54	–	SPACE ONLY	0		

VA:L (LIGHTING)	0	CONNECTED	0	DEMAND
VA:R (RECEPTACLES)	0	CONNECTED	0	DEMAND
VA:O (OTHER)	17820	CONNECTED	17820	DEMAND
VA: TOTAL	17820	CONNECTED	17820	DEMAND
AMPS: TOTAL	21	CONNECTED	21	DEMAND

L	R	O		TOTAL			
0	0	9900	VA CONNECTED TO A PHASE	9900	VA =	36	AMPS CONNECTED TO A PHASE @ 277 VOLTS
0	0	7920	VA CONNECTED TO B PHASE	7920	VA =	29	AMPS CONNECTED TO B PHASE @ 277 VOLTS
0	0	0	VA CONNECTED TO C PHASE	0	VA =	0	AMPS CONNECTED TO C PHASE @ 277 VOLTS
0	0	17820	TOTAL	17820	VA		

MODIFIED CIRCUITS

CITY OF MCALLEN
SOFTBALL FIELD FACILITIES
MUNICIPAL PARK
MCALLEN, TEXAS

McALLEN Parks & Recreation

HALFF
5900 WEST MILITARY, SUITE 100
MCALLEN, TEXAS 78503
TEL (956) 664-0286
FAX (956) 664-0302
TBPE FIRM #F-312

Revision No.	Date	Description

STATE OF TEXAS
THOMAS E. DEARMIN
54352
REGISTERED PROFESSIONAL ENGINEER
7/11/18

100% CONSTRUCTION DOCUMENTS

Project No.:	33348
Issued:	07-11-18
Drawn By:	CHAVEZ/MG
Checked By:	TED
Scale:	AS NOTED
Sheet Title	ELECTRICAL SCHEDULES

E3.03
Sheet Number

File Name: i:\33000s\33348\001\MEP\CADD\E303-SC-33348.dwg
Current Tab (Layout): E3.03 ELECTRICAL SCHEDULES User: AH2522
Printed Date: 7/11/2018 12:06:21 PM

PANELBOARD 'L3'

VOLTAGE: 208Y/120 VOLT 3 PHASE 4 WIRE — LOCATION: ELECTRICAL ROOM
LUGS ONLY — MOUNTING: SURFACE
BUSES: MAIN – 100 A; NEUTRAL – 100%; EQUIPMENT GROUND — Isc = 10,000 A RMS SYM AVAILABLE

VA:L	VA:R	VA:O	LOAD	BKR	CKT	PH	CKT	BKR	LOAD	VA:L	VA:R	VA:O
0	180		RECEPTACLE (POLE B10)	20/1	1	A	2	20/1	PWR: SCOREBOARD 4	0	0	500
0	180		RECEPTACLE (POLE B9)	20/1	3	B	4	20/1	PWR: SCOREBOARD 5	0	0	500
0	180		RECEPTACLE (POLE B14)	20/1	5	C	6	20/1	PWR: SCOREBOARD 6	0	0	500
0	180		RECEPTACLE (POLE B13)	20/1	7	A	8	20/1	REC: BATTING CAGES – NORTH	0	900	
0	180		RECEPTACLE (POLE B12)	20/1	9	B	10	20/1	SPARE	0	0	
0	180		RECEPTACLE (POLE B11)	20/1	11	C	12	20/1	SPARE	0	0	
0	180		RECEPTACLE (POLE A6)	20/1	13	A	14	20/1	SPARE	0	0	
0	180		RECEPTACLE (POLE A5)	20/1	15	B	16	20/1	CAMERA FEED ON POLE B11	0	180	
0	180		RECEPTACLE (POLE A8)	20/1	17	C	18	20/1	CAMERA FEED ON POLE B12	0	180	
0	180		RECEPTACLE (POLE A7)	20/1	19	A	20	20/1	CAMERA FEED ON POLE A7	0	180	
0	0		SPARE	20/1	21	B	22	20/1	CAMERA FEED ON POLE B9	0	180	
0	0		SPARE	20/1	23	C	24	20/1	CAMERA FEED ON RR BLDG NORTH	0	180	
0	180		RECEPTACLE (POLE P1)	20/1	25	A	26	20/1	CAMERA FEED ON RR BLDG SOUTH	0	180	
0	180		PWR: ECB–2	20/1	27	B	28	20/1	CAMERA FEED ON POLE B14	0	180	
0	180		RECEPTACLE (BACKSTOP FIELD 4)	20/1	29	C	30	20/1	RECEP: TELEPHONE BOARD	0	360	
0	180		RECEPTACLE (BACKSTOP FIELD 5)	20/1	31	A	32	20/1	LTG: FLAG POLES	1500	0	
0	180		RECEPTACLE (BACKSTOP FIELD 6)	20/1	33	B	34	20/1	SPARE	0	0	
0	0		SPARE	20/1	35	C	36	20/1	SPARE	0	0	
0	0		SPARE	20/1	37	A	38	20/1	SPARE	0	0	
0	0		SPARE	20/1	39	B	40	20/1	SPARE	0	0	
0	0		SPARE	20/1	41	C	42	20/1	SPARE	0	0	

VA:L (LIGHTING)	1500	CONNECTED	1875	DEMAND
VA:R (RECEPTACLES)	5220	CONNECTED	5220	DEMAND
VA:O (OTHER)	1500	CONNECTED	1500	DEMAND
VA: TOTAL	8220	CONNECTED	8595	DEMAND
AMPS: TOTAL	23	CONNECTED	24	DEMAND

L	R	O		TOTAL			
1500	2340	500	VA CONNECTED TO A PHASE	4340	VA =	36	AMPS CONNECTED TO A PHASE @ 120 VOLTS
0	1440	500	VA CONNECTED TO B PHASE	1940	VA =	16	AMPS CONNECTED TO B PHASE @ 120 VOLTS
0	1440	500	VA CONNECTED TO C PHASE	1940	VA =	16	AMPS CONNECTED TO C PHASE @ 120 VOLTS
1500	5220	1500	TOTAL	8220	VA		

NEW PANELBOARD 'L1'

VOLTAGE: 208Y/120 VOLT 3 PHASE 4 WIRE — LOCATION: EQUIPMENT RACK
LUGS ONLY — MOUNTING: SURFACE
BUSES: MAIN – 225 A; NEUTRAL – 100%; EQUIPMENT GROUND — Isc = 10,000 A RMS SYM AVAILABLE

VA:L	VA:R	VA:O	LOAD	BKR	CKT	PH	CKT	BKR	LOAD	VA:L	VA:R	VA:O
0	0	500	PWR: SCOREBOARD FIELD 1	20/1	1	A	2	20/1	RECEPTACLE (POLE B1)	0	180	
0	0	500	PWR: SCOREBOARD FIELD 2	20/1	3	B	4	20/1	RECEPTACLE (POLE B2)	0	180	
0	0	500	PWR: SCOREBOARD FIELD 3	20/1	5	C	6	20/1	RECEPTACLE (POLE B3)	0	180	
0	180		CAMERA FEED ON POLE B1	20/1	7	A	8	20/1	RECEPTACLE (POLE B4)	0	180	
0	180		CAMERA FEED ON POLE A1	20/1	9	B	10	20/1	RECEPTACLE (POLE B5)	0	180	
0	180		CAMERA FEED ON POLE A3	20/1	11	C	12	20/1	RECEPTACLE (POLE B6)	0	180	
0	180		CAMERA FEED ON POLE B5	20/1	13	A	14	20/1	RECEPTACLE (POLE B7)	0	180	
0	180		CAMERA FEED ON POLE B3	20/1	15	B	16	20/1	RECEPTACLE (POLE B8)	0	180	
0	180		PWR: ECB–1	20/1	17	C	18	20/1	RECEPTACLE (POLE A1)	0	180	
0	0		SPARE	20/1	19	A	20	20/1	RECEPTACLE (POLE A2)	0	180	
0	0		SPARE	20/1	21	B	22	20/1	RECEPTACLE (POLE A3)	0	180	
0	0		SPARE	20/1	23	C	24	20/1	RECEPTACLE (POLE A4)	0	180	
0	0		SPARE	20/1	25	A	26	20/1	SPARE	0	0	
0	0		SPARE	20/1	27	B	28	20/1	SPARE	0	0	
0	0		SPARE	20/1	29	C	30	20/1	SPARE	0	0	
0	0		SPACE	–	31	A	32	–	SPACE	0	0	
0	0		SPACE	–	33	B	34	–	SPACE	0	0	
0	0		SPACE	–	35	C	36	–	SPACE	0	0	
0	0		SPACE	–	37	A	38	–	SPACE	0	0	
0	0		SPACE	–	39	B	40	–	SPACE	0	0	
0	0		SPACE	–	41	C	42	–	SPACE	0	0	

VA:L (LIGHTING)	0	CONNECTED	0	DEMAND
VA:R (RECEPTACLES)	3240	CONNECTED	3240	DEMAND
VA:O (OTHER)	1500	CONNECTED	1500	DEMAND
VA: TOTAL	4740	CONNECTED	4740	DEMAND
AMPS: TOTAL	13	CONNECTED	13	DEMAND

L	R	O		TOTAL			
0	1080	500	VA CONNECTED TO A PHASE	1580	VA =	13	AMPS CONNECTED TO A PHASE @ 120 VOLTS
0	1080	500	VA CONNECTED TO B PHASE	1580	VA =	13	AMPS CONNECTED TO B PHASE @ 120 VOLTS
0	1080	500	VA CONNECTED TO C PHASE	1580	VA =	13	AMPS CONNECTED TO C PHASE @ 120 VOLTS
0	3240	1500	TOTAL	4740	VA		

PANELBOARD 'L4'

VOLTAGE: PRIMARY INPUT 480V TO 240/120 VOLT 1 PHASE SECONDARY — LOCATION: GREEN AREA
FACTORY INTALLED PRIMARY AND SECONDARY MAIN BREAKERS — MOUNTING: EQUIPMENT RACK
BUSES: MAIN – 125 A; NEUTRAL – 100%; EQUIPMENT GROUND — Isc = 18,000 A RMS SYM AVAILABLE

VA:L	VA:R	VA:O	LOAD	BKR	CKT	PH	CKT	BKR	LOAD	VA:L	VA:R	VA:O
0	0	1980	REC: FOOD TRUCKS	30/1	1	A	2	30/1	REC: FOOD TRUCKS	0	0	1980
0	0	1980	REC: FOOD TRUCKS	30/1	3	B	4	30/1	REC: FOOD TRUCKS	0	0	1980
0	0	1980	REC: FOOD TRUCKS	30/1	5	A	6	30/1	REC: FOOD TRUCKS	0	0	1980
0	0	1980	REC: FOOD TRUCKS	30/1	7	B	8	30/1	REC: FOOD TRUCKS	0	0	1980
0	0	1980	REC: MOBILE STAGE	30/1	9	A	10	20/1	SPARE	0	0	
0	0		SPARE	20/1	11	B	12	20/1	SPARE	0	0	
0	0		SPARE	20/1	13	A	14	20/1	SPARE	0	0	
0	0		SPARE	20/1	15	B	16	20/1	SPARE	0	0	
0	0		SPACE	–	17	A	18	–	SPACE	0	0	
0	0		SPACE	–	19	B	20	–	SPACE	0	0	
0	0		SPACE	–	21	A	22	–	SPACE	0	0	
0	0		SPACE	–	23	B	24	–	SPACE	0	0	
0	0		SPACE	–	25	A	26	–	SPACE	0	0	
0	0		SPACE	–	27	B	28	–	SPACE	0	0	
0	0		SPACE	–	29	A	30	–	SPACE	0	0	
0	0		SPACE	–	31	B	32	–	SPACE	0	0	
0	0		SPACE	–	33	A	34	–	SPACE	0	0	
0	0		SPACE	–	35	B	36	–	SPACE	0	0	
0	0		SPACE	–	37	A	38	–	SPACE	0	0	
0	0		SPACE	–	39	B	40	–	SPACE	0	0	

VA:L (LIGHTING)	0	CONNECTED	0	DEMAND
VA:R (RECEPTACLES)	0	CONNECTED	0	DEMAND
VA:O (OTHER)	17820	CONNECTED	17820	DEMAND
VA: TOTAL	17820	CONNECTED	17820	DEMAND
AMPS: TOTAL	74	CONNECTED	74	DEMAND

L	R	O		TOTAL			
0	0	9900	VA CONNECTED TO A PHASE	9900	VA =	83	AMPS CONNECTED TO A PHASE @ 120 VOLTS
0	0	7920	VA CONNECTED TO B PHASE	7920	VA =	66	AMPS CONNECTED TO B PHASE @ 120 VOLTS
0	0	17820	TOTAL	17820	VA		

PANELBOARD 'L2'

VOLTAGE: 208Y/120 VOLT 3 PHASE 4 WIRE — LOCATION: ELECTRICAL ROOM
LUGS ONLY — MOUNTING: SURFACE
BUSES: MAIN – 225 A; NEUTRAL – 100%; EQUIPMENT GROUND — Isc = 10,000 A RMS SYM AVAILABLE

VA:L	VA:R	VA:O	LOAD	BKR	CKT	PH	CKT	BKR	LOAD	VA:L	VA:R	VA:O
1261	0		LTG: GENERAL	20/1	1	A	2	20/1	PWR: HAND DRYER	0	0	1800
360	0		LTG: BUILDING EXTERIOR	20/1	3	B	4	20/1	PWR: HAND DRYER	0	0	1800
0	1440		REC: CONCESSION	20/1	5	C	6	20/1	PWR: HAND DRYER	0	0	1800
0	1440		REC: CONCESSION	20/1	7	A	8	20/1	PWR: HAND DRYER	0	0	1800
0	1440		REC: CONCESSION	20/1	9	B	10	20/1	PWR: HAND DRYER	0	0	1800
0	1440		REC: CONCESSION	20/1	11	C	12	20/1	PWR: HAND DRYER	0	0	1800
0	1440		REC: CONCESSION	20/1	13	A	14	20/1	PWR: HAND DRYER	0	0	1800
0	1440		REC: CONCESSION	20/1	15	B	16	20/1	PWR: HAND DRYER	0	0	1800
0	1440		REC: CONCESSION	20/1	17	C	18	20/1	PWR: HAND DRYER	0	0	1800
0	900		REC: CONCESSION REFRIGERATOR	20/1	19	A	20	20/1	PWR: HAND DRYER	0	0	1800
0	900		REC: CONCESSION REFRIGERATOR	20/1	21	B	22	20/1	PWR: HAND DRYER	0	0	1800
0	900		REC: CONCESSION REFRIGERATOR	20/1	23	C	24	20/1	REC: WATER COOLER	0	0	500
0	720		REC: GENERAL	20/1	25	A	26	20/1	REC: WATER COOLER	0	0	500
0	540		REC: GENERAL	20/1	27	B	28	20/1	REC: IT RACK	0	720	
0	720		REC: EXTERIOR	20/1	29	C	30	20/1	PWR: CP–1	0	0	219
0	360		REC: FAMILY RESTROOM	20/1	31	A	32	20/1	REC: UMPIRE ROOM	0	360	
0	0	3000	PWR: DWH–1	40/2	33	B	34	15/2	PWR: FCCU–1 (FCU–1)	0	0	1269
0	0	3000	"	–	35	C	36	–	"	0	0	1269
0	0	1656	PWR: EF–1	20/1	37	A	38	50/3	PANEL 'L3'	1500	2340	500
0	0	696	PWR: EF–2	20/1	39	B	40	–	"	0	1440	500
0	0	1176	PWR: SF–1	20/1	41	C	42	–	"	0	1440	500

VA:L (LIGHTING)	3121	CONNECTED	3901	DEMAND
VA:R (RECEPTACLES)	21420	CONNECTED	15710	DEMAND
VA:O (OTHER)	34585	CONNECTED	34585	DEMAND
VA: TOTAL	59126	CONNECTED	54196	DEMAND
AMPS: TOTAL	164	CONNECTED	150	DEMAND

L	R	O		TOTAL			
2761	7560	9856	VA CONNECTED TO A PHASE	20177	VA =	168	AMPS CONNECTED TO A PHASE @ 120 VOLTS
360	6480	12665	VA CONNECTED TO B PHASE	19505	VA =	163	AMPS CONNECTED TO B PHASE @ 120 VOLTS
0	7380	12064	VA CONNECTED TO C PHASE	19444	VA =	162	AMPS CONNECTED TO C PHASE @ 120 VOLTS
3121	21420	34585	TOTAL	59126	VA		

CITY OF MCALLEN
SOFTBALL FIELD FACILITIES
MUNICIPAL PARK
MCALLEN, TEXAS

McALLEN Parks & Recreation

HALFF
5900 WEST MILITARY, SUITE 100
MCALLEN, TEXAS 78503
TEL (956) 664-0286
FAX (956) 664-0252
TBPE FIRM #F-312

Revision No.	Date	Description

STATE OF TEXAS — THOMAS E. DEARMIN — 54352 — REGISTERED PROFESSIONAL ENGINEER
7/11/18

100% CONSTRUCTION DOCUMENTS

Project No.:	33348
Issued:	07-11-18
Drawn By:	CHAVEZ/MG
Checked By:	TED
Scale:	AS NOTED
Sheet Title	ELECTRICAL SCHEDULES

E3.04
Sheet Number

File Name: i:\33000s\33348\001\MEP\CADD\E304-SC-33348.dwg
Current Tab (Layout): E3.04 ELECTRICAL SCHEDULES User: AH2522
Printed Date: 7/11/2018 12:06:31 PM

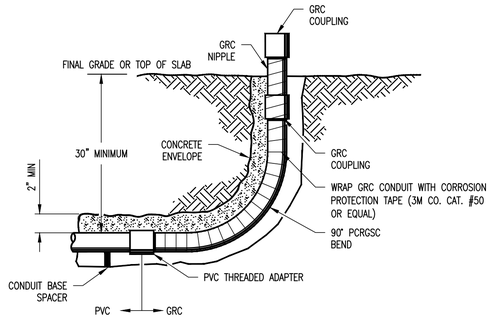

03 TYPICAL CONDUIT STUB-UP DETAIL
N.T.S.

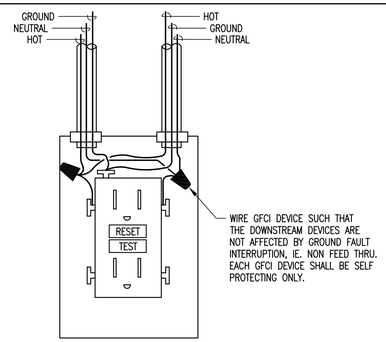

04 GFCI RECEPTACLE - WIRING DIAGRAM
N.T.S.

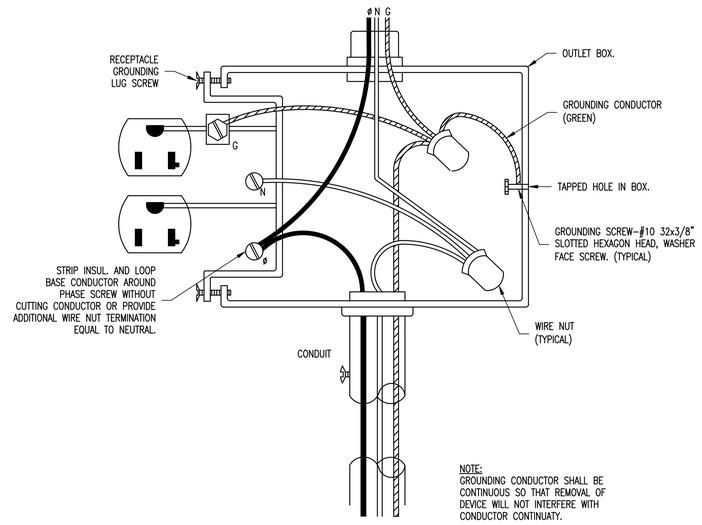

NOTE:
GROUNDING CONDUCTOR SHALL BE CONTINUOUS SO THAT REMOVAL OF DEVICE WILL NOT INTERFERE WITH CONDUCTOR CONTINUATY.

02 TYPICAL RECEPTACLE GROUNDING DETAIL
N.T.S.

TYPICAL ELECTRICAL EQUIPMENT INSTALLATION – FREE STANDING

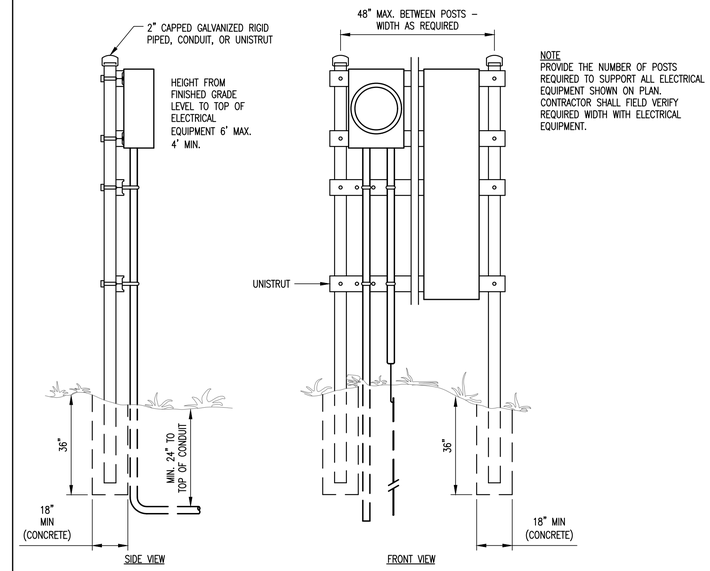

NOTE
PROVIDE THE NUMBER OF POSTS REQUIRED TO SUPPORT ALL ELECTRICAL EQUIPMENT SHOWN ON PLAN. CONTRACTOR SHALL FIELD VERIFY REQUIRED WIDTH WITH ELECTRICAL EQUIPMENT.

01 FREE STANDING EQUIPMENT RACK CONSTRUCTION DETAIL
N.T.S.

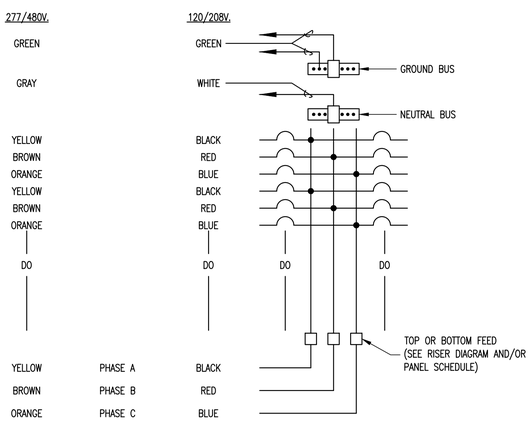

07 TYPICAL PANEL COLOR CODE
N.T.S.

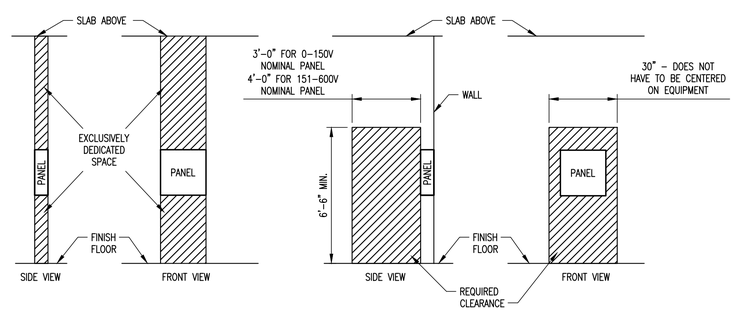

06 TYPICAL PANELBOARD REQUIRED CLEARANCE
N.T.S.

KEY NOTES: (i)

1. QUAZITE BOX. CATALOG# PG2436BA24
2. QUAZITE BOX COVER. CATALOG# PG2436HG00
3. HUBBELL, WIEGMANN ENCLOSURE. CATALOG# HW-J201608SC.

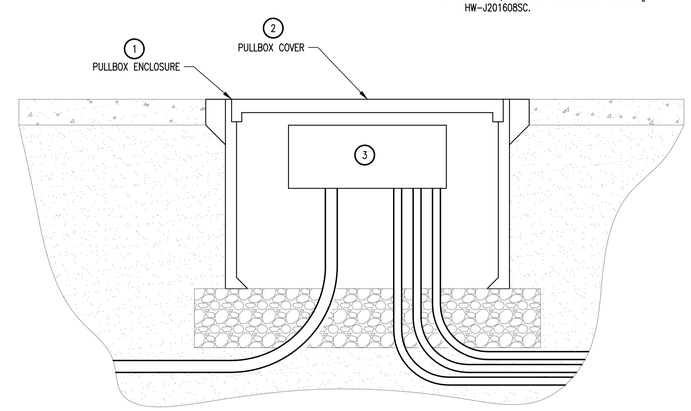

05 SITE LIGHTING PULLBOX
N.T.S.

CITY OF MCALLEN
SOFTBALL FIELD FACILITIES
MUNICIPAL PARK
MCALLEN, TEXAS

McALLEN Parks & Recreation

HALFF
5900 WEST MILITARY, SUITE 100
MCALLEN, TEXAS 78503
TEL (956) 664-0286
FAX (956) 664-0292
TBPE FIRM #F-312

No.	Date	Revision Description

STATE OF TEXAS
THOMAS E. DEARMIN
54352
REGISTERED PROFESSIONAL ENGINEER
7/11/18

100% CONSTRUCTION DOCUMENTS

Project No.:	33348
Issued:	07-11-18
Drawn By:	CHAVEZ/MG
Checked By:	TED
Scale:	AS NOTED

Sheet Title
ELECTRICAL DETAILS

E4.01
Sheet Number

File Name: I:\33000s\33348\001\MEP\CADD\E401-DT-33348.dwg
Current Tab (Layout): E4.01 ELECTRICAL DETAILS User: AH2522
Printed Date: 7/11/2018 12:06:40 PM

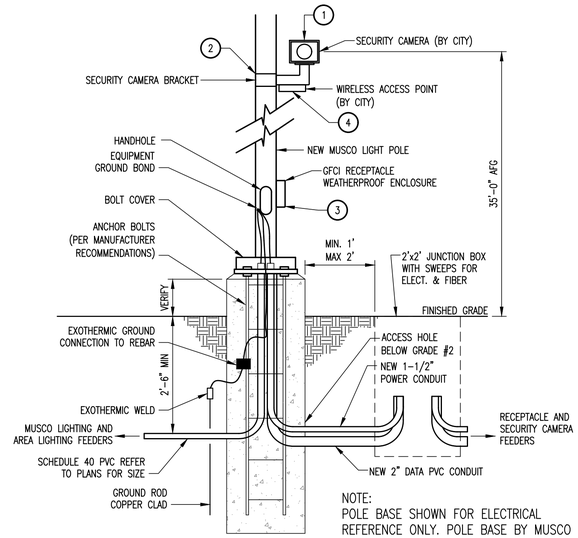

NOTE:
POLE BASE SHOWN FOR ELECTRICAL REFERENCE ONLY. POLE BASE BY MUSCO LIGHTING.

KEY NOTES:

1. SECURITY CAMERAS, SPD DEVICE AND ACCESSORIES TO BE PROVIDED AND INSTALLED BY CITY OF MCALLEN.
2. MOUNTING BRACKET FOR CAMERA ON MUSCO POLES PROVIDED AND INSTALLED BY CITY OF McALLEN.
3. GFCI BASE-MOUNTED ADAPTER PLATE, RECEPTACLE AND COVER PLATE PROVIDED BY MUSCO LIGHTING, INSTALLED BY CONTRACTOR.
4. WIRELESS ACCESS POINTS, ACCESSORIES AND MOUNTING BRACKET TO BE PROVIDED AND INSTALLED BY CITY OF MCALLEN.

02 NEW MUSCO LIGHTING POLE DITAIL
N.T.S.

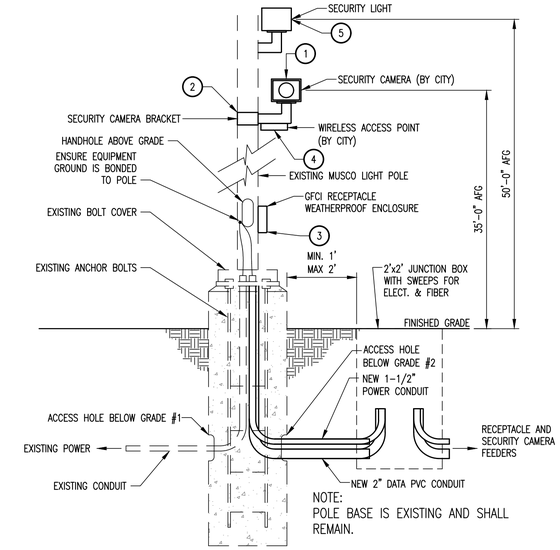

NOTE:
POLE BASE IS EXISTING AND SHALL REMAIN.

KEY NOTES:

1. SECURITY CAMERAS, SPD DEVICE AND ACCESSORIES TO BE PROVIDED BY CITY OF MCALLEN, INSTALLED BY CONTRACTOR.
2. CONTRACTOR TO PROVIDE AND INSTALL MOUNTING BRACKET FOR CAMERA ON MUSCO POLES.
3. GFCI BASE-MOUNTED ADAPTER PLATE, RECEPTACLE AND COVER PLATE PROVIDED BY MUSCO LIGHTING, INSTALLED BY CONTRACTOR.
4. WIRELESS ACCESS POINTS AND ACCESSORIES TO BE PROVIDED BY CITY OF MCALLEN, INSTALLED BY CONTRACTOR. CONTRACTOR SHALL PROVIDE AND INSTALL MOUNTING BRACKET.
5. CONTRACTOR SHALL INSTALL NEW AREA LIGHT. AREA LIGHT PROVIDED BY MUSCO LIGHTING.

01 EXISTING MUSCO LIGHTING POLE DETAIL
N.T.S.

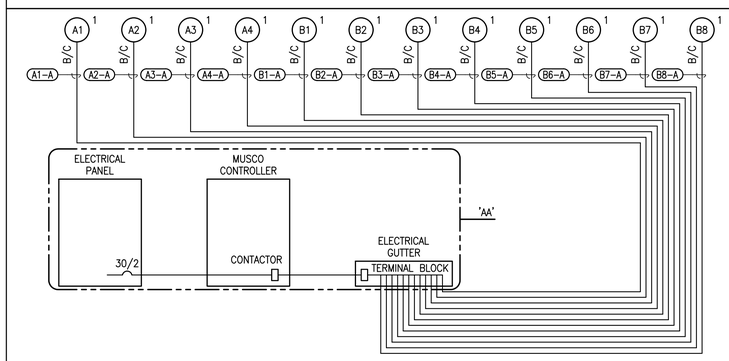

AREA LIGHTING CONTROL SCHEMATIC

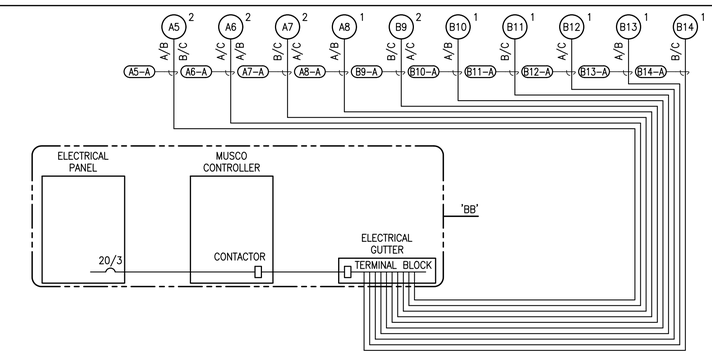

AREA LIGHTING CONTROL SCHEMATIC

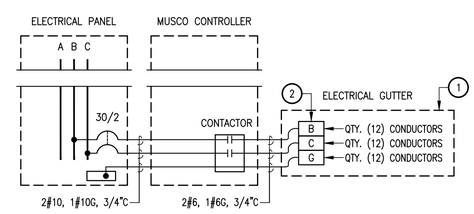

ENLARGED EQUIPMENT DETAIL 'AA'

KEY NOTES:

1. PROVIDE NEMA-3R ELECTRICAL WIREWAY, 12"x12"x36" FOR INSTALLATION OF TERMINAL BLOCKS.
2. PROVIDE WITH POWER DISTRIBUTION BLOCK FOR AREA LIGHTING PHASE CONDUCTORS, BASIS OF DESIGN SQUARE 'D' #LBC365212 AND CLEAR COVER #LB53.

04 AREA LIGHTING CONTROL DIAGRAM - AREA 2
N.T.S.

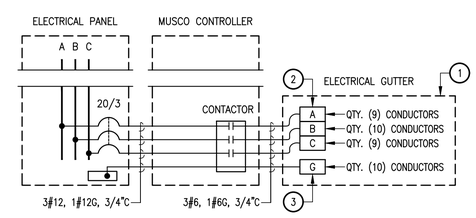

ENLARGED EQUIPMENT DETAIL 'BB'

KEY NOTES:

1. PROVIDE NEMA-3R ELECTRICAL WIREWAY, 12"x12"x36" FOR INSTALLATION OF TERMINAL BLOCKS.
2. PROVIDE WITH POWER DISTRIBUTION BLOCK FOR AREA LIGHTING PHASE CONDUCTORS, BASIS OF DESIGN SQUARE 'D' #LBC365212 AND CLEAR COVER #LB53.
3. PROVIDE WITH POWER DISTRIBUTION BLOCK FOR AREA LIGHTING GROUND CONDUCTORS, BASIS OF DESIGN SQUARE 'D' #LBC165212 AND CLEAR COVER #LB51.

03 AREA LIGHTING CONTROL DIAGRAM - AREA 1
N.T.S.

CITY OF MCALLEN
SOFTBALL FIELD FACILITIES
MUNICIPAL PARK
MCALLEN, TEXAS

McALLEN Parks & Recreation

HALFF
5900 WEST MILITARY, SUITE 100
MCALLEN, TEXAS 78503
TEL (956) 664-0286
FAX (956) 664-0302
TBPE FIRM #F-312

Revision		
No.	Date	Description

STATE OF TEXAS
THOMAS E. DEARMIN
54352
REGISTERED PROFESSIONAL ENGINEER
7/11/18

100% CONSTRUCTION DOCUMENTS

Project No.:	33348
Issued:	07-11-18
Drawn By:	CHAVEZ/MG
Checked By:	TED
Scale:	AS NOTED
Sheet Title	ELECTRICAL DETAILS

E4.02
Sheet Number

File Name: I:\33000s\33348\001\MEP\CADD\E402-DT-33348.dwg
Current Tab (Layout): E4.02 ELECTRICAL DETAILS User: AH2522
Printed Date: 7/11/2018 12:06:44 PM

PLUMBING ABBREVIATIONS

A

AB	ASSEMBLY BILL
ABS	ACRYLONITRILE BUTADIENE STYRENE
ABV	ABOVE
AC	AIR COMPRESSOR
ACCU	AIR COOLED CONDENSING UNIT
AD	AREA DRAIN
ADA	AMERICAN WITH DISABILITIES ACT
ADJ	ADJUSTABLE
AD	ACCESS DOOR
AFF	ABOVE FINISH FLOOR
AFG	ABOVE FINISH GRADE
AFS	ABOVE FINISH SURFACE
AHU	AIR HANDLING UNIT
AL	ALUMINUM
AMP	AMPERE(S)
AP	ACCESS PANEL
APPROX	APPROXIMATE
ARCH	ARCHITECT, ARCHITECTURAL
AS	AIR SEPARATOR
ASHRAE	AMERICAN SOCIETY OF HEATING, REFRIGERATING AND AIR CONDITIONING ENGINEERS
ATF	AUTOMATIC TRANSMISSION FLUID
AUX	AUXILIARY
AV	AIR VENT
AW	ACID WASTE

B

B	BOILER
BD	BLOW-DOWN
BEL	BELOW
BFF	BELOW FINISH FLOOR
BFP	BACKFLOW PREVENTER
BFV	BUTTERFLY VALVE
BHP	BRAKE HORSEPOWER
BKR	BREAKER
BLDG	BUILDING
BOD	BOTTOM OF DUCT
BOI	BID OPTION ITEM
BOP, B.O.P.	BOTTOM OF PIPE
BOS	BOTTOM OF STEEL
BTU	BRITISH THERMAL UNIT
BTUH	BRITISH THERMAL UNIT PER HOUR
BV	BALL VALVE
BWV	BACK WATER VALVE

C

CA	COMPRESSED AIR
CAP	CAPACITY
CBV	CALIBRATED BALANCE VALVE
CD	CONDENSATE DRAIN
CDF	CONDENSATE DRAIN FUNNEL
CDP	CONDENSATE DRAIN PUMP
CF	CUBIC FEET
CFH	CUBIC FEET PER HOUR
CFM	CUBIC FEET PER MINUTE
CH	CHILLER
CI	CAST IRON
CIRC	CIRCULATING
℄	CENTER LINE
CLG	CEILING
CMU	CONCRETE MASONRY UNIT
CO	CLEANOUT
COL	COLUMN
COND	CONDENSATE
CONN	CONNECT, CONNECTION
CONT	CONTINUE, CONTINUATION
COTG	CLEANOUT TO GRADE
CONTR	CONTRACTOR
CP	CIRCULATING PUMP
CPVC	CHLORINATED POLYVINYL CHLORIDE
CR	CONDENSATE RECEIVER
CRAC	COMPUTER ROOM AIR CONDITIONING
CU	CONDENSING UNIT
CW	DOMESTIC COLD WATER
°C	DEGREES CELSIUS

D

D	DEPTH
dB	DECIBEL
DESIG	DESIGNATION
DEG	DEGREE(S)
DFU	DRAINAGE FIXTURE UNIT
DIA OR ø	DIAMETER
DIM	DIMENSION
DISC	DISCONNECT
DISCH	DISCHARGE
DIST	DISTANCE
DN	DOWN
DS	DOWNSPOUT
DWG(S)	DRAWING(S)
DWH	DOMESTIC WATER HEATER

E

(E)	EXISTING
EA	EACH
ECC	ECCENTRIC
EER	ENERGY EFFICIENCY RATIO
EF	EXHAUST FAN
EFF	EFFICIENCY
ELEV, EL	ELEVATION
ELEC	ELECTRICAL
ENCL	ENCLOSURE
EQ	EQUAL
EQUIP	EQUIPMENT
EQV	EARTHQUAKE VALVE
ET	EXPANSION TANK
EXH	EXHAUST
EXT	EXTERNAL
EXP. JOINT	EXPANSION JOINT
EWC	ELECTRIC WATER COOLER
EWS	EMERGENCY SHOWER AND EYE WASH

F

°F	DEGREE FAHRENHEIT
FC	FAN COIL
FCO	FLOOR CLEANOUT
FCW	FILTERED COLD WATER
FD	FLOOR DRAIN
FFE, F.F.E.	FINISH FLOOR ELEVATION
FGE, F.G.E.	FINISH GRADE ELEVATION
FIN	FINISH
FLA	FULL LOAD AMPS
FLR	FLOOR
FP	FIRE PROTECTION
FPM	FEET PER MINUTE
FS	FLOOR SINK
FT	FOOT, FEET
FWD	FOOD WASTE DISPOSER

G

G	NATURAL GAS (LOW PRESSURE)
GA	GAUGE, GAGE
GAL.	GALLON
GALV	GALVANIZED
GL	GRID LINE
GM	GAS METER
GPH	GALLONS PER HOUR
GPM	GALLONS PER MINUTE
GPR	GAS PRESSURE REGULATOR
GRS	GREASE
GW	GREASE WASTE (KITCHEN)

H

H	HEIGHT
HB	HOSE BIBB
HC	HEATING COIL
HD	HEAD
HOA	HAND-OFF-AUTOMATIC
HORIZ	HORIZONTAL
HP	HORSE POWER
HPW	HIGH PRESSURE WATER
HTG	HEATING
HTR	HEATER
HVAC	HEATING, VENTILATION AND AIR CONDITIONING
HW	DOMESTIC HOT WATER (SUPPLY)
HWR	DOMESTIC HOT WATER RETURN
HZ	HERTZ

I

ICW	INDUSTRIAL COLD WATER
ID	INSIDE DIAMETER
I.E., IE	INVERT ELEVATION
IN	INCH
IN WG	INCHES WATER GAUGE
IN W.C.	INCHES OF WATER COLUMN
IT	INFORMATION TECHNOLOGY
IW	INDUSTRIAL WASTE

J

J-BOX	JUNCTION BOX

K

KW	KILOWATT
KWH	KILOWATT-HOUR

L

L	LAVATORY
LBS OR #	POUND(S)
LF	LINEAR FEET
LO	LUBRICATING OIL
LOC	LOCATION

M

MAX	MAXIMUM
MBH	1000 BTU PER HOUR
MECH	MECHANICAL
MFR	MANUFACTURER
MIN	MINIMUM
MPG	MEDIUM PRESSURE GAS
MS	MOP SINK
MTD	MOUNTED
MV	MIXING VALVE

N

N/A	NOT APPLICABLE
NC	NORMALLY CLOSED
NEMA	NATIONAL ELECTRICAL MANUFACTURER'S ASSOCIATION
NIC	NOT IN CONTRACT
NO	NORMALLY OPEN
NO.	NUMBER
NOM	NOMINAL
N.T.S., NTS	NOT TO SCALE

O

OC	ON CENTER
OD	OUTSIDE DIAMETER
OF	OVERFLOW
OH	OVERHEAD
OMS	ORGANIZATIONAL MAINTENANCE SHOP
OPNG	OPENING
OPER	OPERATING
OSHA	OCCUPATIONAL SAFETY AND HEALTH ADMINISTRATION

P

P	PUMP
PCD	PUMP CONDENSATE DRAIN
PD	PRESSURE DROP, PERIMETER DRAIN
PH	PHASE
PLBG	PLUMBING
PLC	PUMP LEVEL CONTROL(S)
PNL	PANEL
POC	POINT OF CONNECTION
POD	POINT OF DISCONNECT
PRESS	PRESSURE
PRS	PRESSURE REDUCING STATION
PRV	PRESSURE REDUCING VALVE
PS	PRESSURE SWITCH
PSF	POUNDS PER SQUARE FOOT
PSI	POUNDS PER SQUARE INCH
PSIA	POUNDS PER SQUARE INCH ABSOLUTE
PSIG	POUNDS PER SQUARE INCH GAUGE
PSV	PRESSURE SAFETY VALVE
PV	PLUG VALVE
PVC	POLYVINYL CHLORIDE

Q

QTY	QUANTITY

R

(R)	RELOCATED
RD	ROOF DRAIN
RE:	REFERENCE, REFER
RECIRC	RECIRCULATE
REINF	REINFORCING
REQD	REQUIRED
REV	REVISION, REVISE
RICB	REFRIGERATOR ICE CONNECTION BOX
RLA	RUNNING LOAD AMPERES
RM	ROOM
RPM	REVOLUTIONS PER MINUTE
RTU	ROOF TOP UNIT
RW	RAIN WATER
RWH	RAIN WATER HARVESTING

S

S	SOIL (SANITARY SEWER)
SD	STORM DRAIN
SECT	SECTION
SEER	SEASONAL ENERGY EFFICIENCY RATIO
SH	SHOWER
SHD	SHOWER DRAIN
SF	SQUARE FEET
SHT	SHEET
SIM	SIMILAR
SHT MTL	SHEET METAL
SK	SINK
SMACNA	SHEET METAL AND AIR CONDITIONING CONTRACTORS NATIONAL ASSOCIATION
SOV	SHUT-OFF VALVE
SP	SUMP PUMP
SPEC	SPECIFICATION
SQ	SQUARE
SS	STAINLESS STEEL, SERVICE SINK
STD	STANDARD
STL	STEEL
STRUC	STRUCTURAL
SURF	SURFACE
SUSP	SUSPEND
SW	COLD WATER (SOFT)
SV	SUPPLY VALVE
SYM	SYMBOL
S=%	SLOPE AT PERCENTAGE SHOWN

T

TDH	TOTAL DYNAMIC HEAD
TEMP	TEMPERATURE
THRU	THROUGH
TMV	THERMOSTATIC MIXING VALVE
TOP, T.O.P.	TOP OF PIPE
TP	TRAP PRIMER OR TRAP PRIMING
TYP	TYPICAL
TW	TEPID WATER

U

U	URINAL
U/C	UNDER CUT
U/F	UNDER FLOOR
U/G	UNDER GROUND
U/S	UNDER SLAB
UFC	UNIFIED FACILITIES CRITERIA
UTR	UP THROUGH ROOF
UL	UNDERWRITERS LABORATORIES, INC.
UNO	UNLESS NOTED OTHERWISE
UPS	UNINTERRUPTIBLE POWER SUPPLY
USB	UNIT STORAGE BUILDING

V

V	VENT
VAC	VOLTAGE ALTERNATING CURRENT
VBF	VENT BELOW FLOOR
VEL	VELOCITY
VERT	VERTICAL
VFD	VARIABLE FREQUENCY DRIVE
VLV	VALVE
VOR	VALVE ON RISER
VTR	VENT THROUGH ROOF

W

W	WASTE
W/	WITH
W/O	WITHOUT
WAP	WALL ACCESS PANEL
WC	WATER CLOSET
w.c.	WATER COLUMN
WCO	WALL CLEANOUT
WF	WASH FOUNTAIN
WHA	WATER HAMMER ARRESTER
WM	WATER METER
WP	WEATHER PROOF
WPD	WATER PRESSURE DROP
WR	WATER RISER
WS	WATER SOFTENER
WSFU	WATER SUPPLY FIXTURE UNIT
WT	WEIGHT

X

XFMR	TRANSFORMER

PLUMBING GENERAL NOTES:

A. INFORMATION ON THIS PLAN HAS BEEN OBTAINED FROM EXISTING DRAWINGS AND SITE SURVEY. CONTRACTOR SHALL FIELD VERIFY EXISTING CONDITIONS PRIOR TO COMMENCING WORK. ANY DISCREPANCIES BETWEEN EXISTING CONDITIONS AND CONSTRUCTION DOCUMENTS SHALL BE REPORTED IMMEDIATELY TO THE ENGINEER AND/OR ARCHITECT.
B. PLUMBING CONTRACTOR SHALL ADHERE TO ALL CITY CODES, ORDINANCES, AND OTHER STATE AND LOCAL CODES THAT HAVE AUTHORITY OVER THIS PROJECT.
C. PLUMBING CONTRACTOR SHALL EXTEND ALL CONDENSATE AND INDIRECT DRAINS FROM EQUIPMENT TO FLOOR DRAIN AND/OR FLOOR SINK, IN MECHANICAL ROOM.
D. PLUMBING CONTRACTOR TO COORDINATE WITH MECHANICAL CONTRACTOR FOR ANY INSTALLATION OF PIPING AND DUCTWORK PRIOR TO BEGINNING OF CONSTRUCTION
E. PLUMBING CONTRACTOR SHALL TERMINATE ALL WATER ROUGH-IN WITH SHUT-OFF VALVES BEFORE CONNECTING TO EQUIPMENT AND RELATED FIXTURES.
F. REFER TO ARCHITECTS DRAWINGS FOR MOUNTING HEIGHTS OF ALL PLUMBING FIXTURES.
G. INSULATE "P" TRAPS AND SUPPLIES AT HANDICAP LAVATORIES WITH INSULATION KIT.
H. PROVIDE VACUUM BREAKER TO ALL FIXTURES WITH HOSE CONNECTION AND APPLIANCES WITH DIRECT CONNECTIONS TO DOMESTIC WATER.
I. ALL FLOOR DRAINS AND/OR FLOOR SINKS SHALL BE PROVIDED WITH TRAP PRIMER CONNECTION.
J. PROVIDE STOPS AND WATER HAMMERS AT EACH FIXTURE OR GROUP OF FIXTURES.
K. ALL VENTS THROUGH ROOF SHALL BE FLASHED A MINIMUM OF 12" ABOVE ROOF. ALL VENTS SHALL BE MINIMUM OF 15' AWAY FROM ANY OUTSIDE INTAKE.
L. PROVIDE CEILING ACCESS PANEL FOR WATER ISOLATION VALVES, WATER HAMMER ARRESTORS AND TRAP PRIMER VALVES LOCATED IN OTHERWISE INACCESSIBLE AREAS.
M. PROVIDE INTUMESENT PUTTY AND SLEEVE ALL PIPING CROSSING FIRE RATED WALLS.
N. SLEEVE ALL OUTSIDE WALL, FLOOR SLAB, AND BEAM PENETRATIONS. COORDINATE WITH STRUCTURAL ENGINEER PRIOR TO COMMENCEMENT OF WORK TO AVOID CONFLICT.
O. DOMESTIC WATER LINE SHALL BE ROUTED, SO AS TO AVOID CROSSING OVER LIGHT FIXTURES WHERE POSSIBLE AND ELECTRICAL PANELS IN ALL CASES.
P. PLUMBING CONTRACTOR SHALL COORDINATE EXACT LOCATION OF UTILITIES WITH CIVIL ENGINEER, AND CITY PRIOR TO INSTALLATION. FAILURE TO COMPLY SHALL RESULT IN CORRECTING AT NO COST TO THE OWNER REPRESENTATIVE.
Q. GENERAL CONTRACTOR TO CONTACT CITY WATER, AND WASTE DEPARTMENTS 48 HOURS PRIOR TO TAP. NO EXCEPTIONS.

PLUMBING SYMBOL LEGEND

SYMBOL	DESCRIPTION	SYMBOL	DESCRIPTION
	SANITARY WASTE LINE		BALL VALVE
	VENT LINE		CHECK VALVE
GW	GREASE WASTE LINE		GATE VALVE
AW	ACID WASTE LINE		GAS COCK
RD	PRIMARY ROOF DRAIN LINE		BALANCING VALVE
OD	SECONDARY OVERFLOW ROOF DRAIN LINE		WATER HAMMER ARRESTOR
CD	CONDENSATE DRAIN LINE		GLOBE VALVE
	DOMESTIC COLD WATER	FCO	FLOOR CLEANOUT
	DOMESTIC HOT WATER (110°F)	YCO	YARD CLEANOUT
120°F	DOMESTIC HOT WATER (120°F)		FLOOR DRAIN
140°F	DOMESTIC HOT WATER (140°F)		FLOOR SINK
	DOMESTIC HOT WATER RETURN LINE		ROOF DRAIN / OVERFLOW ROOF DRAIN
TW	DOMESTIC TEPID WATER LINE		HOSE BIBB
CA	COMPRESSED AIR LINE		WALL HYDRANT
G	NATURAL GAS LINE		UNION
	EXISTING TO NEW CONNECTION		BRANCH – TOP CONNECTION
			BRANCH – BOTTOM CONNECTION
			PIPE RISE
			PIPE DROP
		P 1	PLUMBING RISER DESIGNATION
		01 P3.01	PLUMBING DETAIL REFERENCE

NOTE: NOT ALL SYMBOLS MAY BE USED ON THIS PROJECT

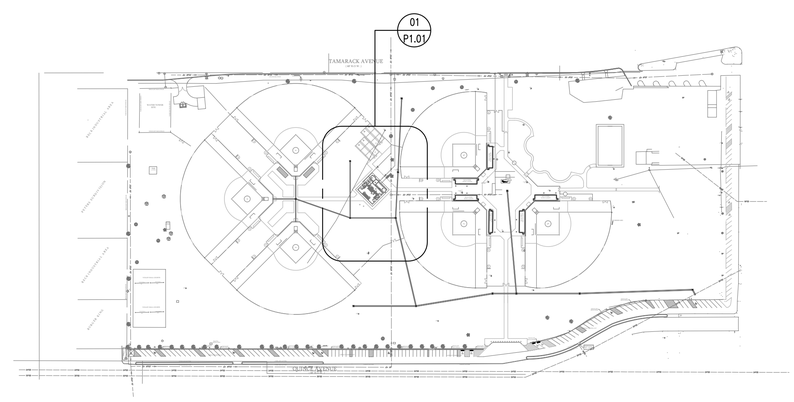

01 PLUMBING SITE PLAN
SCALE: 1"=200'

CITY OF MCALLEN
SOFTBALL FIELD FACILITIES
MUNICIPAL PARK
MCALLEN, TEXAS

McALLEN Parks & Recreation

HALFF
5900 WEST MILITARY, SUITE 100
MCALLEN, TEXAS 78503
TEL (956) 664-0286
FAX (956) 664-0292
TBPE FIRM #F-312

Revision No.	Date	Description

STATE OF TEXAS
HUGO H. AVILA
90071
LICENSED PROFESSIONAL ENGINEER
7-11-18

100% CONSTRUCTION DOCUMENTS

Project No.:	33348
Issued:	07-11-18
Drawn By:	E.M.
Checked By:	H.A.
Scale:	AS NOTED
Sheet Title	

PLUMBING ENERAL LEGEND AND OVERALL SITE PLAN

P0.01
Sheet Number

File Name: \\mcasvo\mca_vol1\33000s\33348\001\MEP\CADD\P0.01-GN-33348.dwg
Current Tab (Layout): P0.01 User: AH1497
Printed Date: 7/11/2018 11:42:42 AM

GENERAL NOTES:

A. REFER TO P0.01 FOR PLUMBING GENERAL NOTES.

KEY NOTES:

1. SHUT–OFF VALVE IN CAST BOX SET FLUSH WITH FINISH GRADE.
2. FLOOR DRAIN SHALL BE PRIMED WITH 1/2" PIPE FROM NEAREST LAVATORY P–TRAP TAILPIECE. REFER TO DETAIL 06 ON SHEET P2.01 FOR REQUIREMENTS.
3. PROVIDE AND INSTALL INSULATED COPPER CONDENSATE DRAIN LINE IN ATTIC SPACE. PROVIDE PIPE HANGER SUPPORTS MAXIMUM 5'–0" O.C. SPACING. SLOPE PIPING 1/8 INCH PER FOOT. ROUTE AND DROP CONDENSATE LINE EXPOSED ALONG THE WALL INTO NEAREST MOP SINK. CLAMP PIPE SECURELY TO WALL.

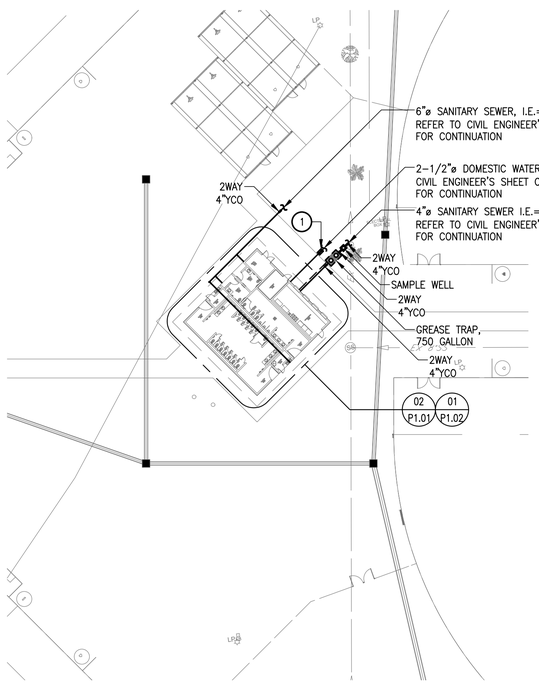

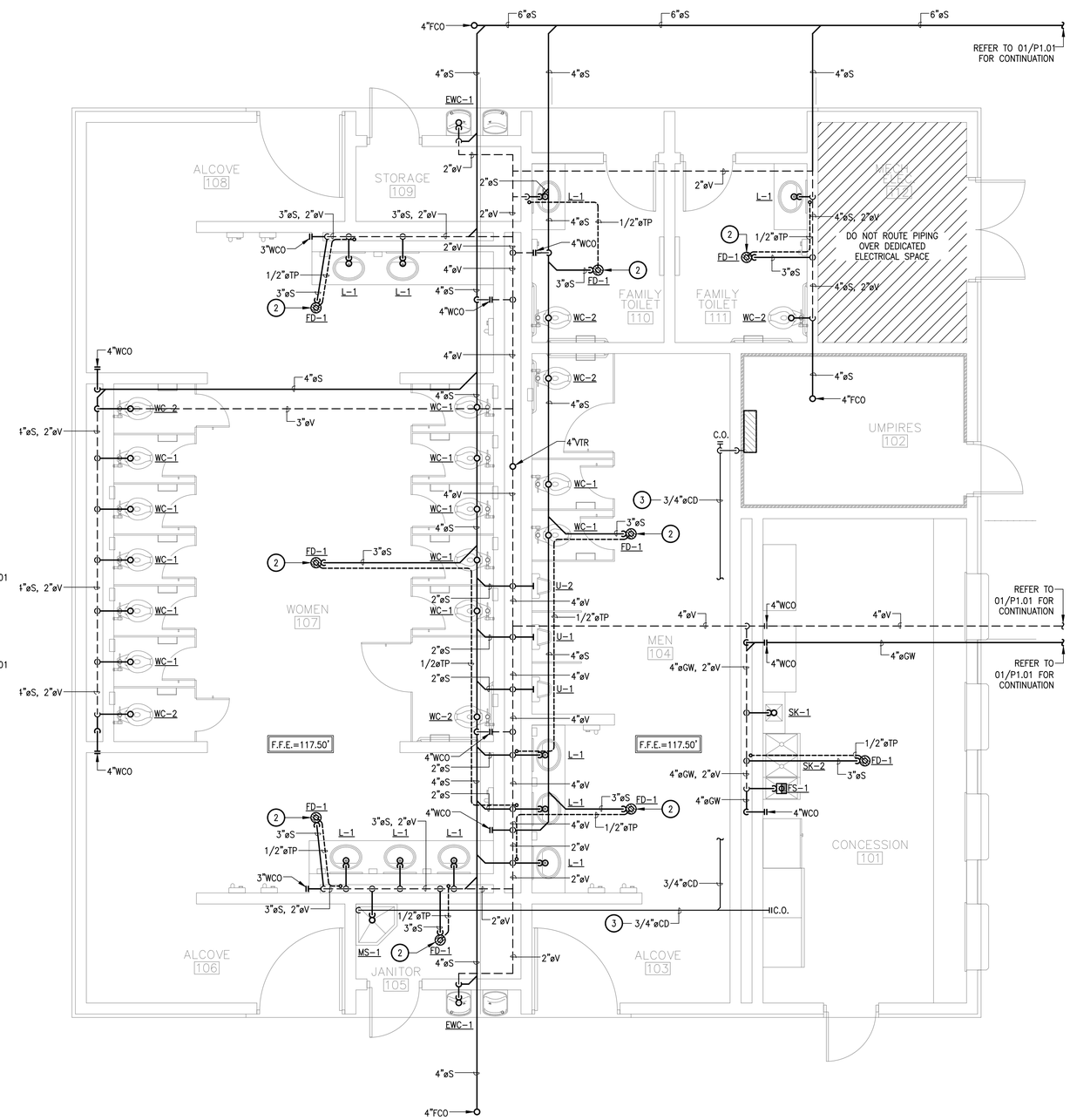

WHERE BEAM PENETRATIONS ARE REQUIRED FOR PROPER SLOPE AND CONNECTION OF SEWER LINE, PIPES SHALL BE SLEEVED. COORDINATE ANY BEAM PENETRATION WITH STRUCTURAL ENGINEER.

PLUMBING CONTRACTOR SHALL COORDINATE DOMESTIC WATER AND SANITARY SEWER LINE DIRECTION OF FLOW, SIZE, INVERT, AND POINT OF CONNECTION WITH CIVIL PLANS PRIOR TO INSTALLATION OF ROUGH–IN TO AVOID CONFLICT. ANY DISCREPANCIES FOUND BY THE PLUMBING CONTRACTOR SHALL BE REPORTED TO THE ENGINEER/ARCHITECT IMMEDIATELY AND PRIOR TO ANY INSTALLATION. FAILURE TO COMPLY SHALL MAKE ALL CORRECTIONS AND/OR MODIFICATIONS THE FULL RESPONSIBILITY OF THE CONTRACTOR.

01 PLUMBING PARTIAL SITE PLAN

SCALE: 1"=40'

02 PLUMBING SANITARY SEWER PLAN

SCALE: 1/4" = 1'-0"

CITY OF MCALLEN
SOFTBALL FIELD FACILITIES
MUNICIPAL PARK
MCALLEN, TEXAS

McALLEN Parks & Recreation

HALFF
5000 WEST MILITARY, SUITE 100
MCALLEN, TEXAS 78503
TEL (956) 664-0286
FAX (956) 664-0302
TBPE FIRM #F-312

Revision		
No.	Date	Description

STATE OF TEXAS
HUGO H. AVILA
90071
LICENSED PROFESSIONAL ENGINEER
7-11-18

100% CONSTRUCTION DOCUMENTS

Project No.:	33348
Issued:	07-11-18
Drawn By:	E.M.
Checked By:	H.A.
Scale:	AS NOTED

Sheet Title

PLUMBING PARTIAL SITE PLAN AND SANITARY SEWER PLAN

P1.01

Sheet Number

File Name: \\mcasvs\mca_vol1\33000s\33348\001\MEP\CADD\P1.01-PL-33348.dwg
Current Tab (Layout): P1.01 User: AH1497
Printed Date: 7/11/2018 11:42:49 AM

GENERAL NOTES:

A. REFER TO P0.01 FOR PLUMBING GENERAL NOTES.

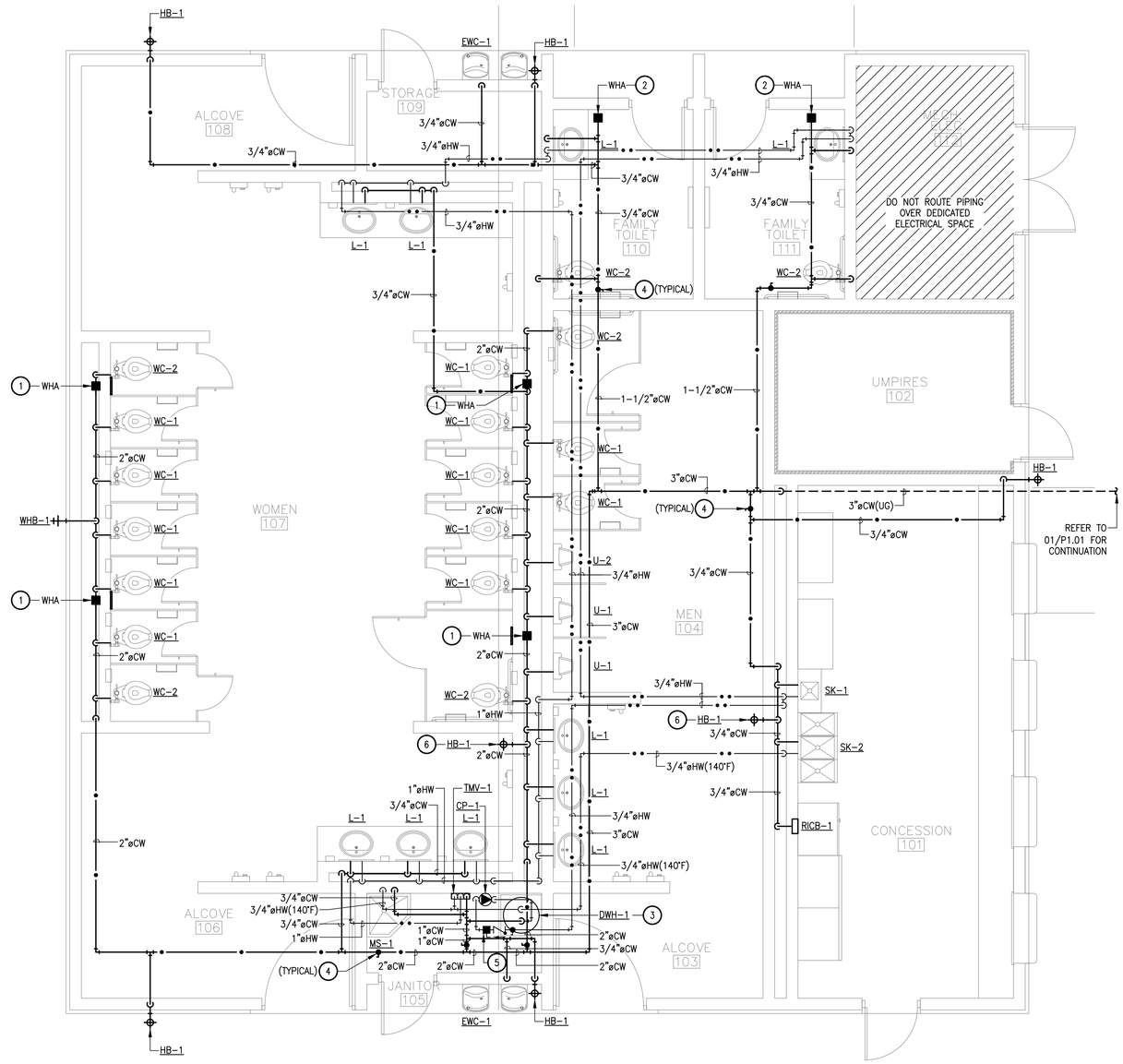

KEY NOTES:

1. WATER HAMMER ARRESTOR IN CHASE. WHERE INACCESSIBLE PROVIDE AND INSTALL 12"X12" HINGED 16 GAUGE STEEL ACCESS PANEL WITH LOCKABLE KEYED DOOR. PRIME COATED WITH RUST INHIBITIVE ELECTROSTATIC POWDER, BAKED GREY ENAMEL AND SHALL BE PAINTED TO MATCH SURROUNDING AREAS. COORDINATE LOCATION TO AVOID CONFLICTS WITH PLUMBING FIXTURE(S), STALL PARTITION AND/OR GRAB BARS.
2. WATER HAMMER ARRESTOR ABOVE CEILING. WHERE INACCESSIBLE PROVIDE AND INSTALL 12"X12" HINGED 16 GAUGE STEEL ACCESS PANEL WITH LOCKABLE KEYED DOOR. PRIME COATED WITH RUST INHIBITIVE ELECTROSTATIC POWDER, BAKED GREY ENAMEL AND SHALL BE PAINTED TO MATCH SURROUNDING AREAS. COORDINATE LOCATION TO AVOID CONFLICTS WITH LIGHT FIXTURES AND MECHANICAL EQUIPMENT ON CEILING.
3. PROVIDE AND INSTALL SHUT-OFF VALVES ON ALL INLETS AND OUTLETS OF WATER HEATER, CIRCULATING PUMP AND THERMOSTATIC MIXING VALVE.
4. SHUT-OFF VALVE ABOVE CEILING. WHERE INACCESSIBLE PROVIDE AND INSTALL 12"X12" HINGED 16 GAUGE STEEL ACCESS PANEL WITH LOCKABLE KEYED DOOR. PRIME COATED WITH RUST INHIBITIVE ELECTROSTATIC POWDER, BAKED GREY ENAMEL AND SHALL BE PAINTED TO MATCH SURROUNDING AREAS. COORDINATE LOCATION TO AVOID CONFLICTS WITH LIGHT FIXTURES AND MECHANICAL EQUIPMENT ON CEILING.
5. BALANCING VALVE, CHECK VALVE AND SHUT-OFF VALVE ABOVE CEILING. BALANCING VALVE SHALL BE SET TO 0.5GPM.
6. HOSE BIB SHALL BE INSTALLED 1'-6" ABOVE FINISH FLOOR. LOCATE HOSE BIB IN WALL SPACE BETWEEN P-TRAP SOLID ENCLOSURE AND APPROACH EDGE OF COUNTERTOP. REFER TO ARCHITECTURAL PLANS FOR ENCLOSURE DIMENSIONS TO AVOID CONFLICT.

01 PLUMBING DOMESTIC WATER PLAN

SCALE: 1/4" = 1'-0"

CITY OF MCALLEN
SOFTBALL FIELD FACILITIES
MUNICIPAL PARK
MCALLEN, TEXAS

McALLEN Parks & Recreation

HALFF
5900 WEST MILITARY, SUITE 100
MCALLEN, TEXAS 78503
TEL (956) 664-0288
FAX (956) 664-0202
TBPE FIRM #F-312

Revision		
No.	Date	Description

STATE OF TEXAS
HUGO H. AVILA
90071
LICENSED PROFESSIONAL ENGINEER
7-11-18

100% CONSTRUCTION DOCUMENTS

Project No.:	33348
Issued:	07-11-18
Drawn By:	E.M.
Checked By:	H.A.
Scale:	AS NOTED
Sheet Title	PLUMBING DOMESTIC WATER PLAN
Sheet Number	P1.02

File Name: \\mcaowv\mcn_vol1\33000s\33348\001\MEP\CADD\P1.02-PL-33348.dwg
Current Tab (Layout): P1.02 User: AH1497
Printed Date: 7/11/2018 11:43:16 AM

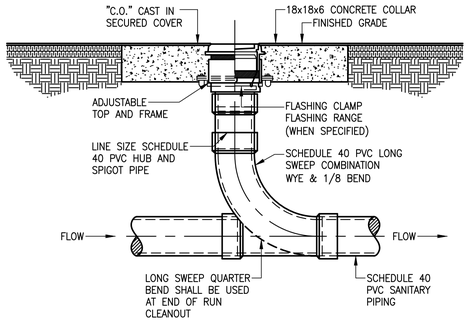

01 EXTERIOR CLEANOUT DETAIL
SCALE: N.T.S.

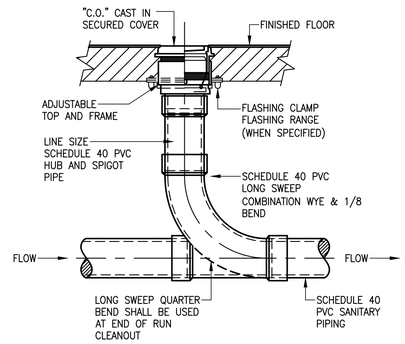

02 INTERIOR CLEANOUT DETAIL
SCALE: N.T.S.

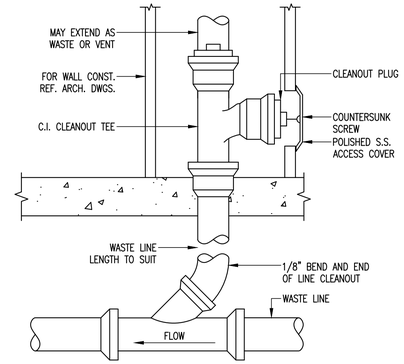

03 WALL CLEANOUT DETAIL
SCALE: N.T.S.

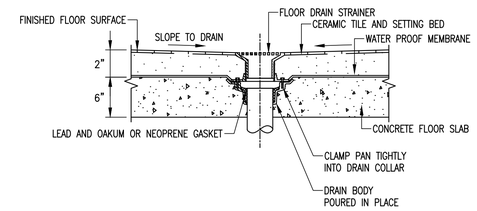

04 OPEN AREA FLOOR DRAIN DETAIL
SCALE: N.T.S.

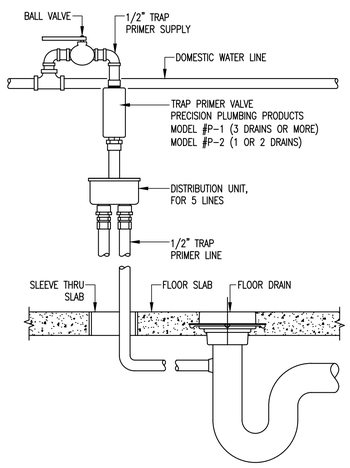

05 TRAP SEAL PRIMER DETAIL
SCALE: N.T.S.

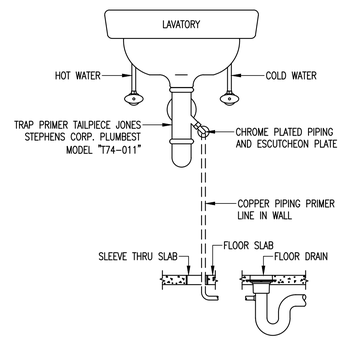

06 TRAP PRIMER TAILPIECE DETAIL
SCALE: N.T.S.

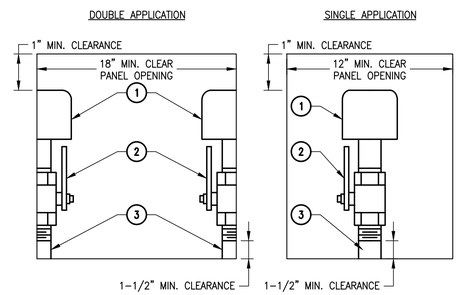

NOTE:
PROVIDE REDUCER IF REQUIRED BETWEEN VALVE AND WATER HAMMER ARRESTOR.

KEY NOTES:

1. WATER HAMMER ARRESTOR
2. BALL VALVE, SAME NOMINAL SIZE AS PIPE BRANCH IN CHASE. OPENING IN BALL VALVE TO MATCH PIPE I.D.
3. PIPE SAME SIZE AS BRANCH IN CHASE TO WHICH IT IS ATTACHED.

07 TYPICAL WATER HAMMER PANEL INSTALLATION
SCALE: N.T.S.

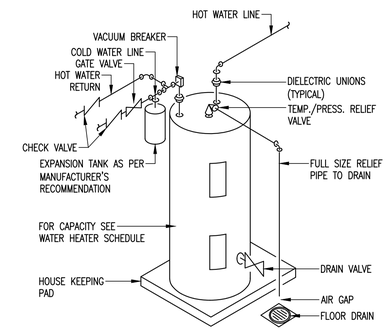

08 WATER HEATER FLOOR MOUNTED DETAIL
SCALE: N.T.S.

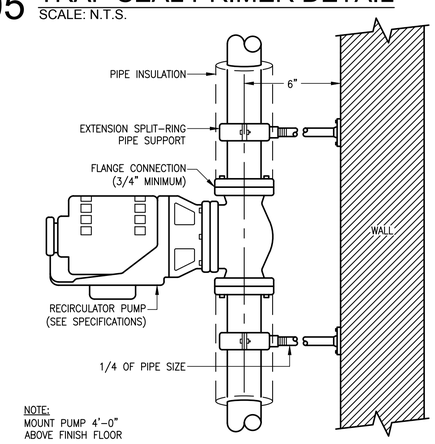

NOTE:
MOUNT PUMP 4'-0" ABOVE FINISH FLOOR

09 IN-LINE RECIRCULATING PUMP MOUNTING
SCALE: N.T.S.

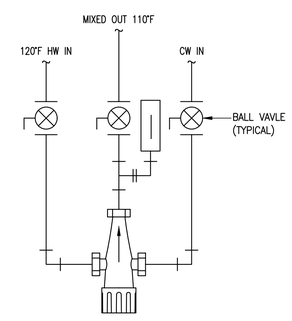

NOTES:
OUTLET TEMPERATURE SHALL BE SET TO LESS THAN 110°F

10 THERMOSTATIC MIXING VALVE DETAIL
SCALE: N.T.S.

CITY OF MCALLEN
SOFTBALL FIELD FACILITIES
MUNICIPAL PARK
MCALLEN, TEXAS

McALLEN Parks & Recreation

HALFF
5900 WEST MILITARY, SUITE 100
MCALLEN, TEXAS 78503
TEL (956) 664-0286
FAX (956) 664-0302
TBPE FIRM #F-312

Revision	
No.	Date	Description

STATE OF TEXAS
HUGO H. AVILA
90071
LICENSED PROFESSIONAL ENGINEER
7-11-18

100% CONSTRUCTION DOCUMENTS

Project No.:	33348
Issued:	07-11-18
Drawn By:	E.M.
Checked By:	H.A.
Scale:	AS NOTED
Sheet Title	
PLUMBING DETAILS	

P2.01
Sheet Number

File Name: \\mcasve\mca_vol1\33000s\33348\001\MEP\CADD\P2.01-DT-33348.dwg
Current Tab (Layout): P2.01 User: AH1497
Printed Date: 7/11/2018 11:43:33 AM

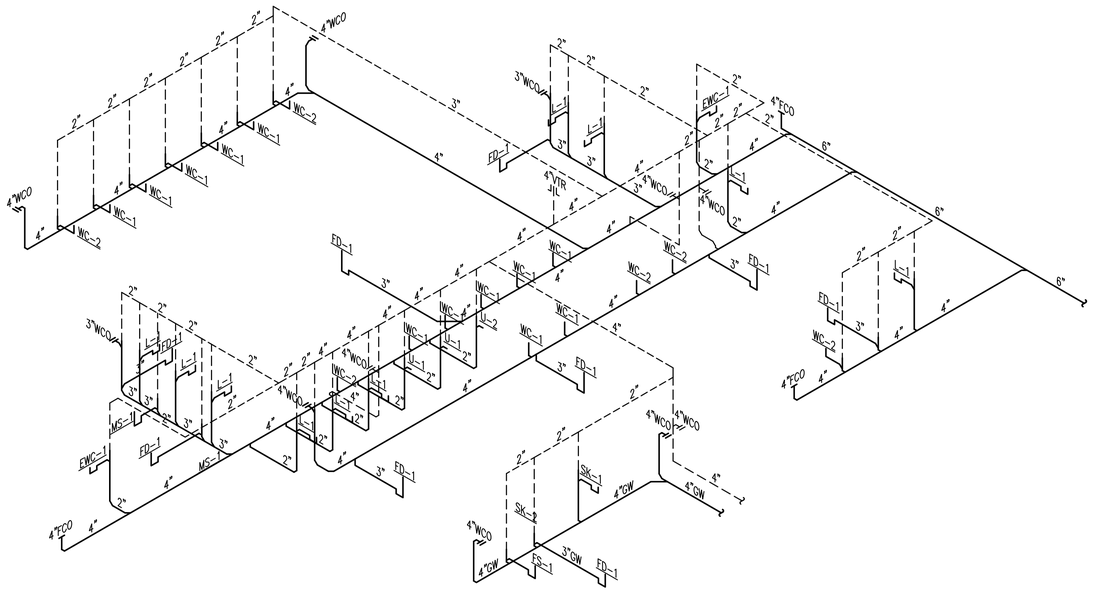

01 PLUMBING RISER SCHEMATIC DIAGRAM - SANITARY SEWER
SCALE: 1/4" = 1'-0"

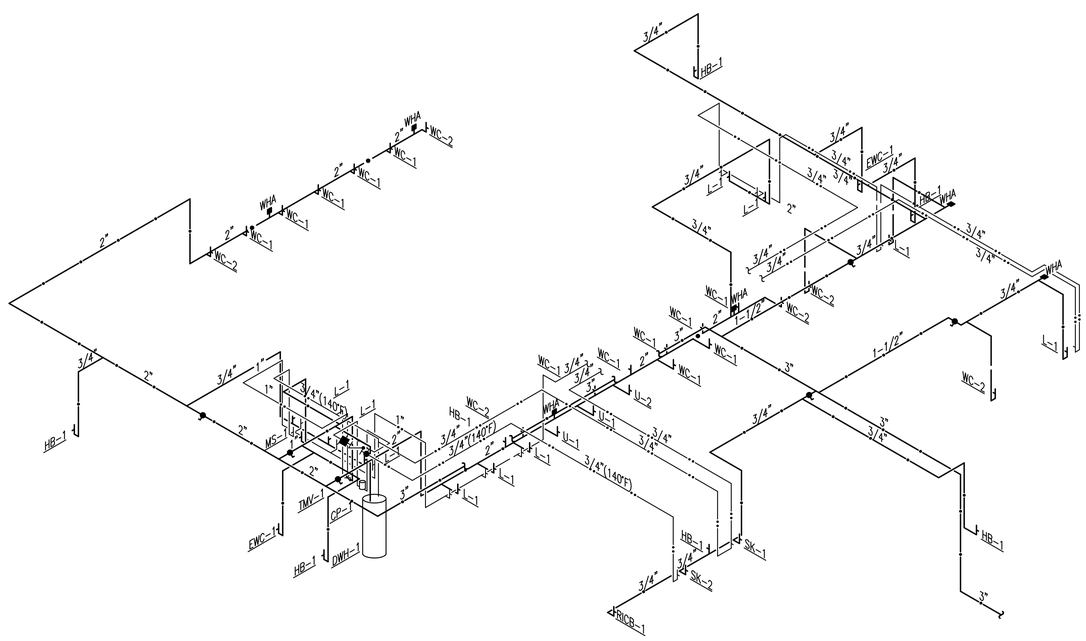

02 PLUMBING RISER SCHEMATIC DIAGRAM - DOMESTIC WATER
SCALE: 1/4" = 1'-0"

CITY OF MCALLEN
SOFTBALL FIELD FACILITIES
MUNICIPAL PARK
MCALLEN, TEXAS

McALLEN Parks & Recreation

HALFF
5900 WEST MILITARY, SUITE 100
McALLEN, TEXAS 78503
TEL (956) 664-0286
FAX (956) 664-0292
TBPE FIRM #F-312

Revision		
No.	Date	Description

STATE OF TEXAS
HUGO H. AVILA
90071
LICENSED
PROFESSIONAL ENGINEER
7-11-18

100% CONSTRUCTION DOCUMENTS

Project No.:	33348
Issued:	07-11-18
Drawn By:	E.M.
Checked By:	H.A.
Scale:	AS NOTED

Sheet Title
PLUMBING RISER SCHEMATIC DIAGRAMS

P2.02
Sheet Number

File Name: \\mcaqva\mca_vol1\33000s\33348\001\MEP\CADD\P2.02-RD-33348.dwg
Current Tab (Layout): P2.02 User: AH1497
Printed Date: 7/11/2018 11:43:47 AM

PLUMBING PIPING MATERIALS SCHEDULE

SERVICE	PIPE	FITTINGS	JOINTS	HANGERS	INSULATION			NOTES
					CONDITIONED SPACES	UNCONDITIONED SPACE	OUTDOORS	
DOMESTIC COLD WATER BELOW GRADE	TYPE K COPPER SOFT	SOLDER JOINT	BRAZED	NONE	–	–	–	
DOMESTIC COLD WATER ABOVE GRADE	TYPE L COPPER HARD	SOLDER JOINT	SOCKET WELD	COPPER PLATED	1/2" MINERAL FIBER	1" MINERAL FIBER	HEAT TRACE	
DOMESTIC HOT WATER ABOVE GRADE	TYPE L COPPER HARD	SOLDER JOINT	SOCKET WELD	COPPER PLATED	1" MINERAL FIBER	1–1/2" MINERAL FIBER	–	
SANITARY WASTE & VENT BELOW GRADE	PVC	PVC	SOLVENT WELD	NONE			–	
SANITARY WASTE & VENT ABOVE GRADE	PVC	PVC	SOLVENT WELD		FIRE WRAP IN PLENUM	–	–	

NOTES:

ELECTRIC WATER HEATER SCHEDULE

MARK	LOCATION	TANK CAPACITY	SELECTION BASED ON		VOLTAGE /PHASE	WATTS INPUT	RECOVERY GALLONS/HR	NOTES
			MFR	MODEL				
DWH–1	JAN.	80 GALLON	RHEEM	ELD80	208/1	6000/1	30 @ 80°F RISE	ALL

NOTES:
1. PROVIDE AND INSTALL EXPANSION TANKS AS PER MANUFACTURER RECOMMENDATIONS.
2. PROVIDE AND INSTALL CORROSION RESISTANT DRAIN PAN METAL WITH RAISED EDGE. DRAIN PAN SHALL EXTEND TWO INCHES (2") ALL AROUND BASE OF WATER HEATER MINIMUM.

CIRCULATING PUMP SCHEDULE

MARK	LOCATION	SELECTION BASED ON		GPM	FEET HEAD	HP	MOTOR DATA		NOTES
		MFR	MODEL				WATTS	VOLTAGE/PHASE/HZ	
CP–1	JAN.	BELL & GOSSET	SERIES PR	0.5	10	1/6	219	115/1/60	ALL

NOTES:
1. LEAD FREE BRONZE CONSTRUCTION WITH MAXIMUM WORKING PRESSURE OF 150 PSI AND MAXIMUM OPERATING TEMPERATURE OF 225°F.
2. PUMP CONTROLS SHALL BE ELECTRIC PROGRAMMABLE, SEVEN DAY CLOCK WITH MANUAL OVERRIDE ON–OFF SWITCH.

WATER HAMMER ARRESTOR SIZING TABLE

P.D.I. SYMBOLS	A	B	C	D	E	F	NOTES
FIXTURE UNIT CAPACITY	1–11	12–32	33–60	61–113	114–154	155–330	1,2

NOTES:
1. IF WATER PRESSURE EXCEEDS 65 PSI USE THE NEXT LARGER SIZE
2. ALL WATER HAMMER ARRESTER SHALL HAVE ACCESS PANEL FOR MAINTENANCE.

PLUMBING SCHEDULE

MARK	FIXTURE TYPE	CONNECTION SIZE				DESCRIPTION
		SS	V	CW	HW	
WC–1	WATER CLOSET FLOOR MOUNTED	4"	2"	1"	–	VITREOUS CHINA, ELONGATED RIM, SIPHON JET ACTION, FLOOR MOUNTED WATER CLOSET WITH 1–1/2" TOP SPUD AMERICAN STANDARD "MADERA" MODEL #2234.001. 15" RIM HEIGHT, 1.28GPF, 10" ROUGH–IN, LOW CONSUMPTION EXPOSED FLUSH VALVE SLOAN "ROYAL" MODEL #111–1.28 AND CHURCH MODEL #9500C OPEN FRONT SEAT LESS COVER.
WC–2	WATER CLOSET FLOOR MOUNTED (HANDICAP)	4"	2"	1"	–	VITREOUS CHINA, ELONGATED RIM, SIPHON JET ACTION, FLOOR MOUNTED WATER CLOSET WITH 1–1/2" TOP SPUD AMERICAN STANDARD "MADERA" MODEL #3043.001. 16–1/2" RIM HEIGHT, 1.28GPF, 10" ROUGH–IN, LOW CONSUMPTION EXPOSED FLUSH VALVE SLOAN "ROYAL" MODEL #111–1.28 AND CHURCH MODEL #9500C OPEN FRONT SEAT LESS COVER.
U–1	URINAL	2"	2"	3/4"	–	VITREOUS CHINA, WALL HUNG, SIPHON JET ACTION WITH 3/4" TOP SPUD URINAL EQUAL TO AMERICAN STANDARD "WASHBROOK" MODEL #6590.001. MINIMUM 14" RIM TO WALL DISTANCE, WALL HANGERS, 0.125GPF LOW CONSUMPTION EXPOSED FLUSH VALVE SLOAN "ROYAL" MODEL # 186–0.125 AND APPROVED CARRIER SYSTEM.
U–2	URINAL (HANDICAP)	2"	2"	3/4"	–	SAME AS U–1, BUT MOUNTED AT HANDICAPPED HEIGHT.
L–1	LAVATORY COUTERTOP (HANDICAP)	2"	2"	1/2"	1/2"	VITREOUS CHINA, SELF RIMMING, 4" CENTERS, ROUND LAVATORY EQUAL TO AMERICAN STANDARD "RONDALYN" MODEL #0491.019. COMPLETE WITH CHROME PLATED DECK MOUNTED FAUCET WITH 1/2" NPSM CONNECTIONS, 0.35GPM, WRIST BLADE HANDLES, VANDAL RESISTANT AERATOR EQUAL TO AMERICAN STANDARD FAUCET MODEL #5500.174. PROVIDE OFFSET TAILPIECE, GRID STRAINER, ANGLE STOPS, SUPPLY–LOOSE KEY, CHROME PLATED P– TRAP WITH CLEANOUT AND PROTECTIVE COVERING.
SK–1	SINK COUNTERTOP (HANDICAP)	2"	2"	1/2"	1/2"	SINGLE COMPARTMENT, STAINLESS STEEL SINK EQUAL TO ELKAY MODEL #LRAD–1919–60–3. SELF RIMMING, 19.5"X19"X6", 3 HOLE ON 4" CENTERS, 18 GAUGE, UNDERCOATED. COMPLETE WITH AMERICAN STANDARD MODEL #6409.170–V05 8" GOOSENECK, 0.5GPM AERATOR, WRIST BLADE HANDLES, CONCEALED MOUNT FAUCET AND ELKAY MODEL #LK–35 STRAINER WITH BASKET. PROVIDE OFFSET TAILPIECE, ANGLE STOPS, CHROME PLATED P–TRAP WITH CLEAN OUT AND PROTECTIVE COVERING.
SK–2	SINK TRIPLE COMPARTMENT	–	–	3/4"	3/4"	TRIPLE COMPARTMENT, #18 GAUGE, STAINLESS STEEL SINK EQUAL TO ELKAY MODEL #E3C16X20–OX. 57"X25.8", FLOOR MOUNTED, 2 HOLES ON 8" CENTERS, ADJUSTABLE FEET. COMPLETE WITH WALL MOUNTED FAUCET ELKAY MODEL #LK940DS20T4H, CHROMED METAL 4 INCH WRIST BLADE HANDLES, STRAINERS WITH BASKETS AND WASTE DRAIN PIPING.
MS–1	MOP SINK FLOOR MOUTNED	3"	2"	3/4"	3/4"	MOLDED STONE CONSTRUCTED MOP SERVICE SINK BASIN EQUAL TO FIAT MODEL #MSB–2424, FACTORY INSTALLED STAINLESS STEEL DRAIN FOR LEAD CAULK CONNECTION. FITTINGS: MODEL #830–AA CHROME–PLATED SERVICE FAUCET WITH VACUUM BREAKER, INTEGRAL STOPS, ADJUSTABLE WALL BRACE, PAIL HOOK, 3/4" RUBBER HOSE 5' LONG, MODEL #832–AA 30" LONG STAINLESS STEEL BRACKET, MODEL #889–CC STAINLESS STEEL MOP HANGER, MODEL #833–AA SILICONE SEALANT, AND 2" DRAIN WITH DOME STRAINER.
EWC–1	WATER COOLER BI–LEVEL (HANDICAP)	2"	2"	1/2"	–	VANDAL RESISTANT, 14 GAUGE, BI–LEVEL SELF–CONTAINED WALL HUNG, REFRIGERATED WATER COOLER EQUAL TO ELKAY MODEL #LVRGRNTL8WSC. SELF CLOSING CONTROLS ON FRONT, STAINLESS STEEL BASIN. VANDAL RESISTANT BUBBLER CAPABLE OF DELIVERING 8.0GPH OF 50°F WATER WITH 80°F INLET WATER AND 90°F ROOM TEMPERATURE. BOTTLE FILLING STATION ELKAY MODEL #LZWSR, HANDS FREE, VISUAL FILTER MONITOR. PROVIDE APPROVED CARRIER SYSTEM. WATER COOLER SHALL BE PROVIDED WITH CANE APRON ELKAY MODEL #98324C.
TMV–1	THERMOSTATIC MIXING VALVE	–	–	1"	1"	THERMOSTATIC MIXING VALVE BRONZE BODY EQUAL TO ZURN WILKINS MODEL #1–ZW1070XLC, 0.35GPM MINIMUM FLOW, LEAD FREE, MEET ASSE1070 REQUIREMENTS. INSTALL THERMOMETER IN THE TEMPERED WATER LINE TO PROVIDE ACCURATE MIXING TEMPERATURES. SET TEMPERATURE OUTLET TO 105°F. PROVIDE SERVICE SHUT–OFF VALVES ON INLETS AND OUTLET WATER LINES.
HB–1	HOSE BIBB	–	–	3/4"	–	LEAD FREE WALL MOUNTED EXPOSED FAUCET EQUAL TO ZURN MODEL #Z1341XL–RC CHROME FINISH, COMPLETE WITH LEAD FREE BACK FLOW PREVENTER ZURN MODEL #Z1399XL–BFP, AND LOOSE TEE KEY.
GT–1	GREASE TRAP	4"	4"	–	–	750 GALLON GREASE TRAP SHALL BE EQUAL TO PARK EQUIPMENT MODEL #GT–750–C–TXMC. GREASE TRAP SHALL BE TRAFFIC DUTY AND INSTALLED AS PER MANUFACTURER RECOMMENDATIONS.
FD–1	FLOOR DRAIN GENERAL DUTY	3"	2"	1/2"	–	LACQUERED CAST IRON FLOOR DRAIN EQUAL TO ZURN MODEL #Z415B. COMPLETE WITH "TYPE B" NICKEL BRONZE STRAINER AND 1/2" TRAP PRIMER CONNECTION.
FS–1	FLOOR SINK	3"	2"	1/2"	–	ZURN MODEL #Z–1900–P–2 PORCELAIN ENAMELED CAST IRON FLOOR SINK. 12"X12"X6" WITH ANTI–SPLASH INTERIOR BOTTOM DOME STRAINER, PORCELAIN–ENAMELED CAST IRON 1/2 GRATE, 1/2" TRAP PRIMER CONNECTION AND PRO–SET TRAP GUARD SYSTEM.

NOTE: REFER TO ARCHITECTURAL PLANS FOR MOUNTING HEIGHTS.

CITY OF MCALLEN
SOFTBALL FIELD FACILITIES
MUNICIPAL PARK
MCALLEN, TEXAS

McALLEN Parks & Recreation

HALFF
5900 WEST MILITARY, SUITE 100
MCALLEN, TEXAS 78503
TEL (956) 664-0286
FAX (956) 664-0292
TBPE FIRM #F-312

Revision No.	Date	Description

STATE OF TEXAS
HUGO H. AVILA
90071
LICENSED PROFESSIONAL ENGINEER
7-11-18

100% CONSTRUCTION DOCUMENTS

Project No.:	33348
Issued:	07-11-18
Drawn By:	E.M.
Checked By:	H.A.
Scale:	AS NOTED

Sheet Title
PLUMBING SCHEDULES

P3.01
Sheet Number

File Name: \\mcaava\mca_vol1\33000s\33348\001\MEP\CADD\P3.01-SC-33348.dwg
Current Tab (Layout): P3.01 User: AH1497
Printed Date: 7/11/2018 11:43:57 AM

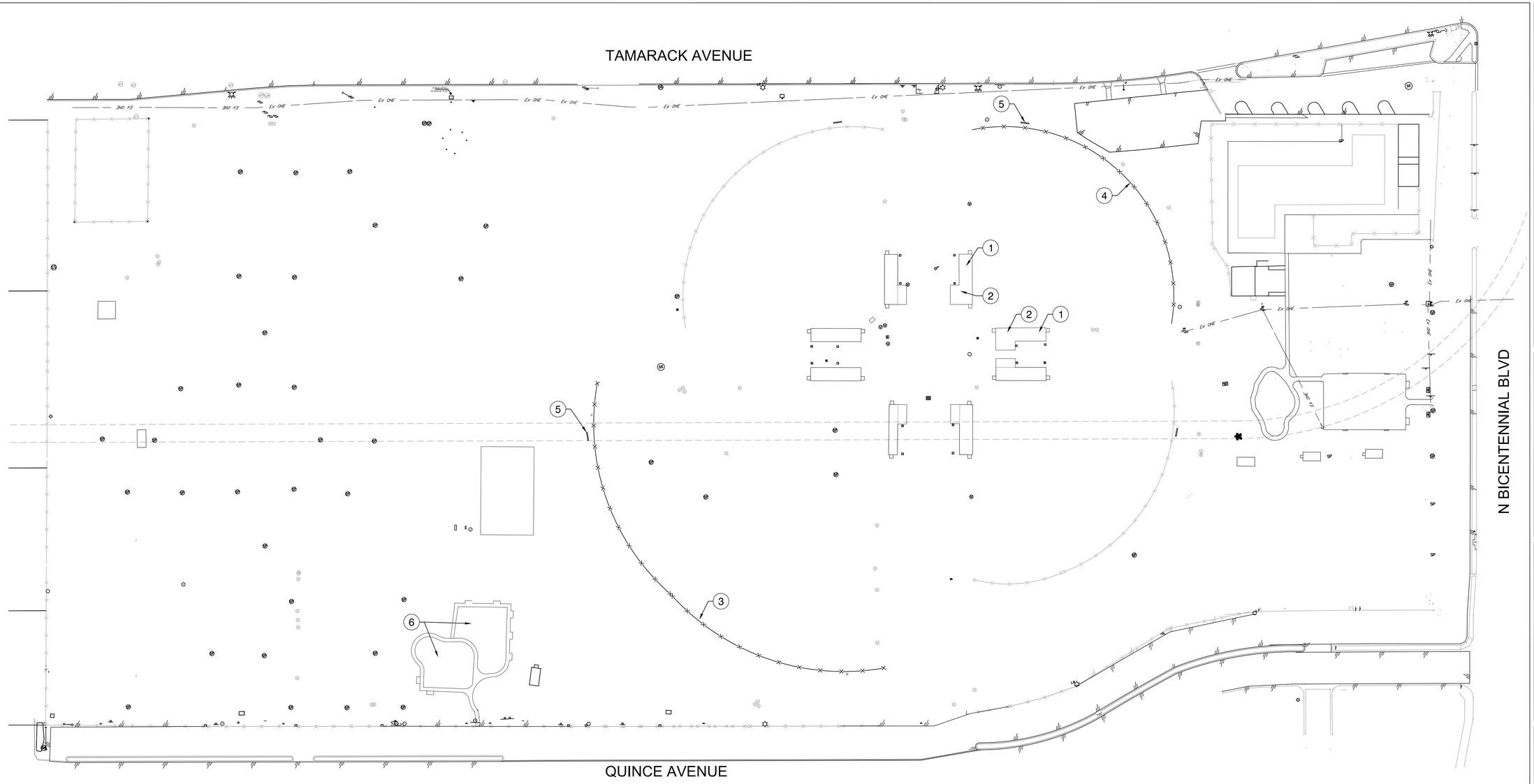

KEY:

1. BLEACHERS TO BE RELOCATED TO PROPOSED FIELD NUMBER 4; REF. SHEET L3.01.
2. SHADE STRUCTURES TO BE RELOCATED TO PROPOSED FIELD NUMBER 4; REF. SHEET L3.01.
3. OUTFIELD FENCE PANELS TO BE RELOCATED TO PROPOSED FIELD NUMBER 2; REF. SHEET L3.03 AND L3.04.
4. OUTFIELD FENCE PANELS TO BE RELOCATED TO PROPOSED FIELD NUMBER 4; REF. SHEET L3.01.
5. SCOREBOARDS TO BE RELOCATED; REF. SHEET L3.03.
6. PLAYGROUND STRUCTURES TO BE RELOCATED BY CITY; REF. SHEET L3.02.

0 60 120 180 feet

SCALE: 1" = 60'

CITY OF McALLEN
SOFTBALL FIELD FACILITIES
MUNICIPAL PARK
McALLEN, TEXAS

HALFF
5000 WEST MILITARY HWY. SUITE 100
McALLEN, TX 78503
TEL (956) 682-0286
FAX (956) 684-0282
TBPE FIRM #F-312

Revision		
No.	Date	Description

REGISTERED LANDSCAPE ARCHITECT
TIMOTHY W. M
1221
STATE OF TEXAS
07/11/2018

100%
CONSTRUCTION
DOCUMENTS

Project No.:	33348.001
Issued:	07/11/2018
Drawn By:	CE
Checked By:	TM
Scale:	AS SHOWN

Sheet Title

RELOCATION PLAN

L1.01

Sheet Number

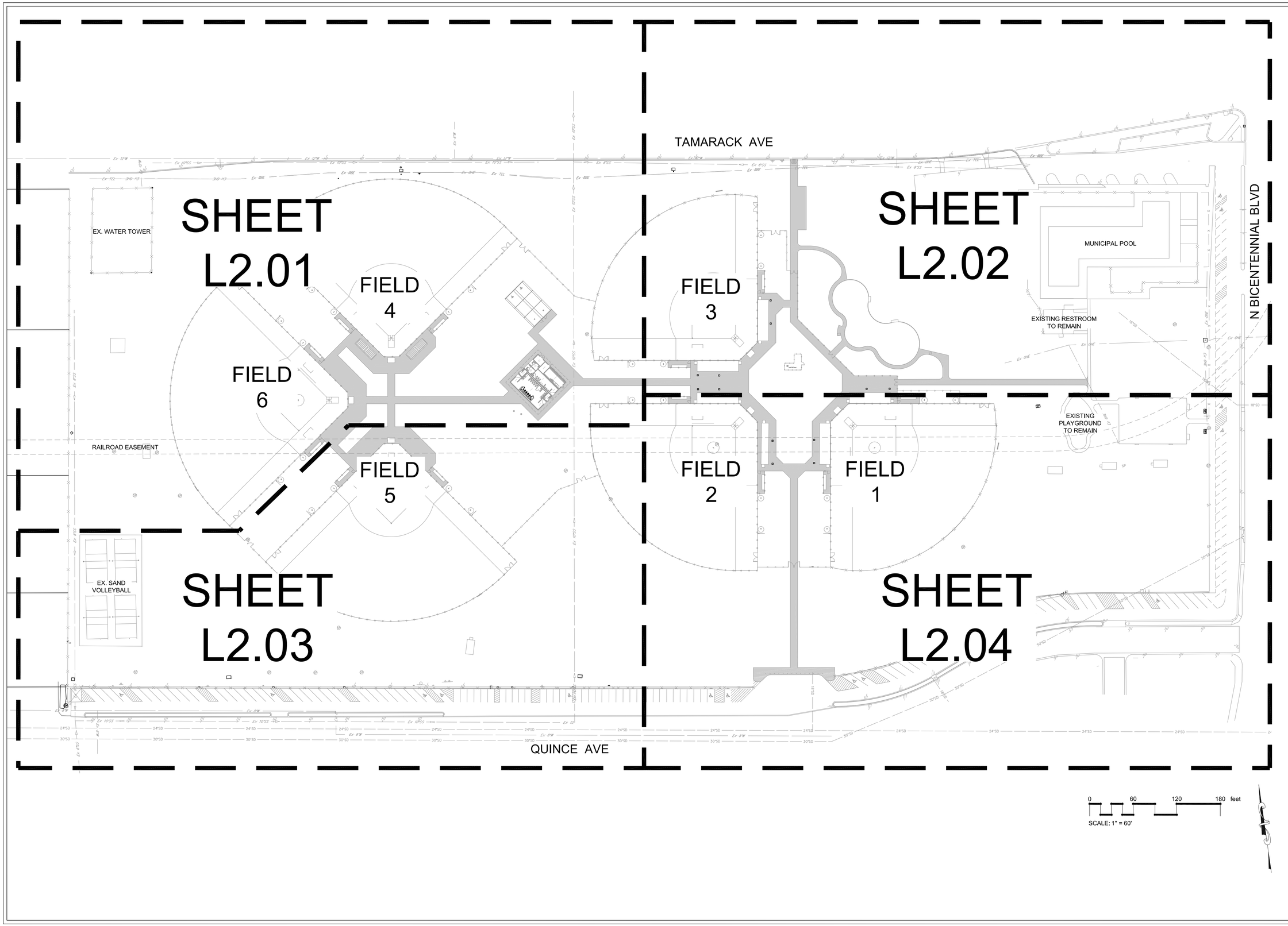

CITY OF McALLEN
SOFTBALL FIELD FACILITIES
MUNICIPAL PARK
McALLEN, TEXAS

McALLEN Parks & Recreation

HALFF
5000 WEST MILITARY HWY, SUITE 100
McALLEN, TX 78503
TEL (956) 682-0286
FAX (956) 664-0282
TBPE FIRM #F-312

Revision		
No.	Date	Description

REGISTERED LANDSCAPE ARCHITECT
TIMOTHY W. MAY
1221
STATE OF TEXAS
07/11/2018

100% CONSTRUCTION DOCUMENTS

Project No.:	33348.001
Issued:	07/11/2018
Drawn By:	CE
Checked By:	TM
Scale:	AS SHOWN
Sheet Title	KEY MAP
Sheet Number	L2.00

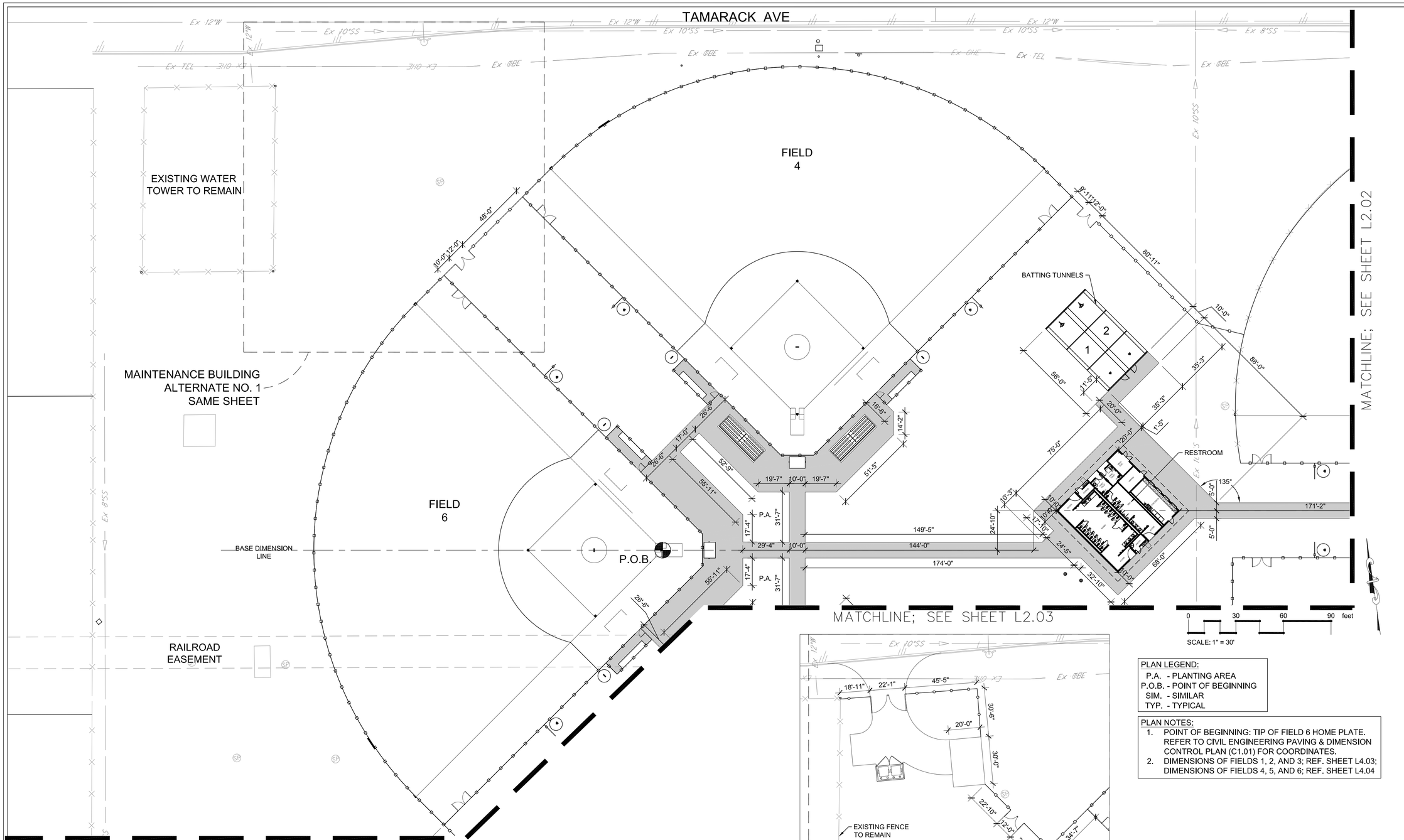

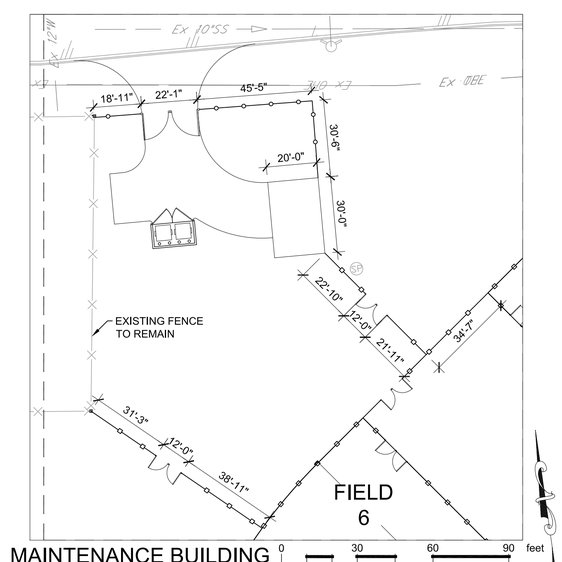

PLAN LEGEND:
P.A. - PLANTING AREA
P.O.B. - POINT OF BEGINNING
SIM. - SIMILAR
TYP. - TYPICAL

PLAN NOTES:
1. POINT OF BEGINNING: TIP OF FIELD 6 HOME PLATE. REFER TO CIVIL ENGINEERING PAVING & DIMENSION CONTROL PLAN (C1.01) FOR COORDINATES.
2. DIMENSIONS OF FIELDS 1, 2, AND 3; REF. SHEET L4.03; DIMENSIONS OF FIELDS 4, 5, AND 6; REF. SHEET L4.04

CITY OF McALLEN
SOFTBALL FIELD FACILITIES
MUNICIPAL PARK
McALLEN, TEXAS

McALLEN Parks & Recreation

HALFF
5000 WEST MILITARY HWY, SUITE 100
McALLEN, TX 78503
TEL (956) 682-0286
FAX (956) 684-0282
TBPE FIRM #F-312

Revision No.	Date	Description

REGISTERED LANDSCAPE ARCHITECT
TIMOTHY W. MAY
1221
STATE OF TEXAS
07/11/2018

100% CONSTRUCTION DOCUMENTS

Project No.:	33348.001
Issued:	07/11/2018
Drawn By:	CE
Checked By:	TM
Scale:	AS SHOWN
Sheet Title	FLATWORK LAYOUT PLAN

L2.01
Sheet Number

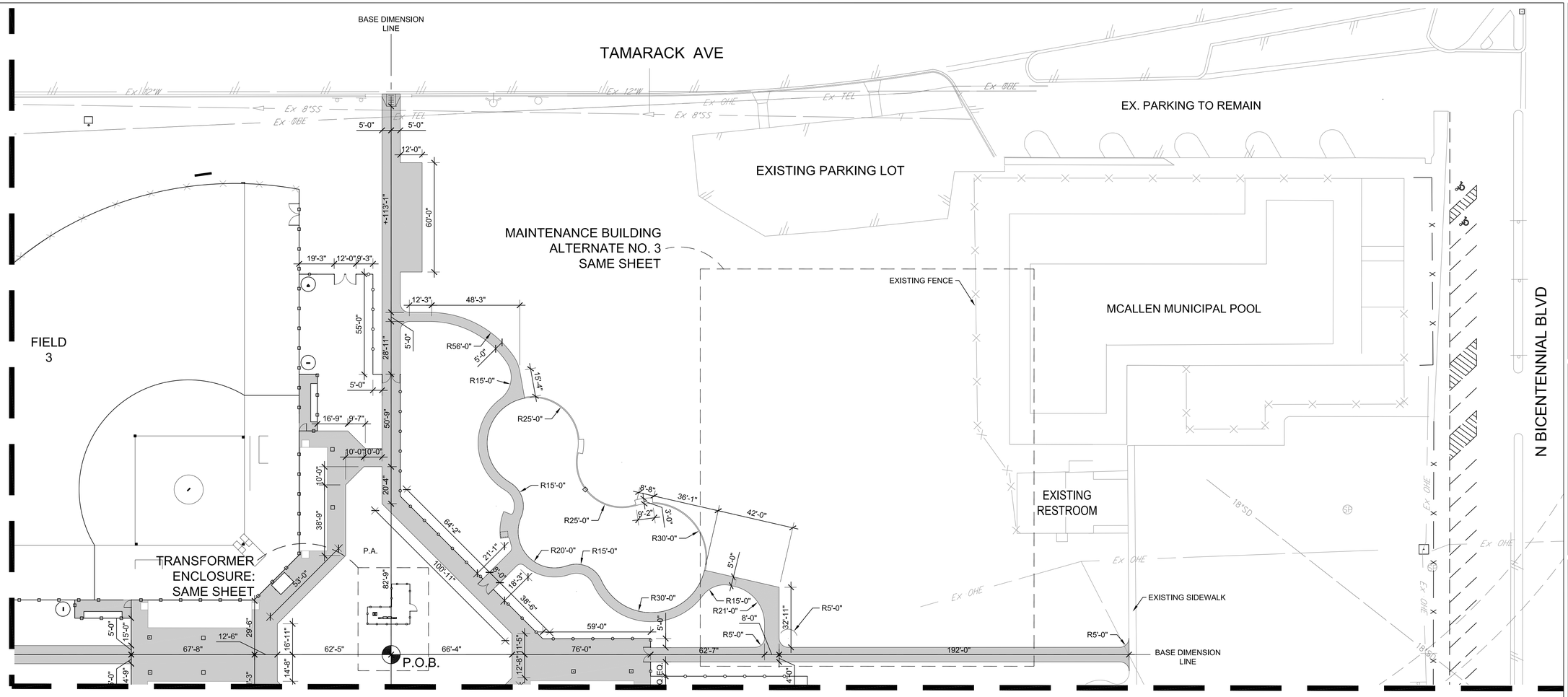

SCALE: 1" = 30'

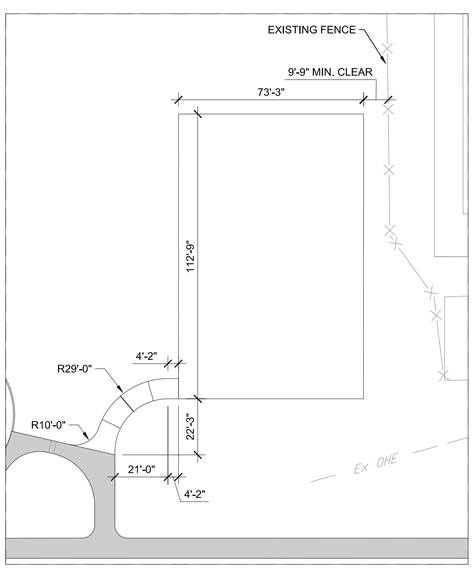

BASKETBALL COURT
ALTERNATE NO. 3

SCALE: 1" = 30'

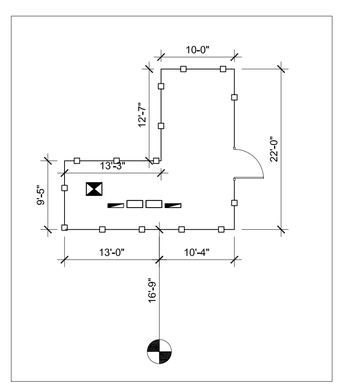

TRANSFORMER ENCLOSURE

SCALE: 1" = 10'

PLAN LEGEND:

P.A. - PLANTING AREA
P.O.B. - POINT OF BEGINNING
SIM. - SIMILAR
TYP. - TYPICAL

PLAN NOTES:

1. POINT OF BEGINNING: CENTERPOINT OF LANDSCAPE FEATURE. REFER TO CIVIL ENGINEERING PAVING & DIMENSION CONTROL PLAN (C1.02) FOR COORDINATES.
2. DIMENSIONS OF FIELDS 1, 2, AND 3: REF. SHEET L4.03; DIMENSIONS OF FIELDS 4, 5, AND 6; REF. SHEET L4.04

CITY OF McALLEN
SOFTBALL FIELD FACILITIES
MUNICIPAL PARK
McALLEN, TEXAS

McALLEN Parks & Recreation

HALFF
5000 WEST MILITARY HWY, SUITE 100
McALLEN, TX 78503
TEL (956) 682-0286
FAX (956) 684-0282
TBPE FIRM #F-312

Revision		
No.	Date	Description

REGISTERED LANDSCAPE ARCHITECT
TIMOTHY W. MAY
1221
STATE OF TEXAS
07/11/2018

100% CONSTRUCTION DOCUMENTS

Project No.:	33348.001
Issued:	07/11/2018
Drawn By:	CE
Checked By:	TM
Scale:	AS SHOWN

Sheet Title

FLATWORK LAYOUT PLAN

L2.02

Sheet Number

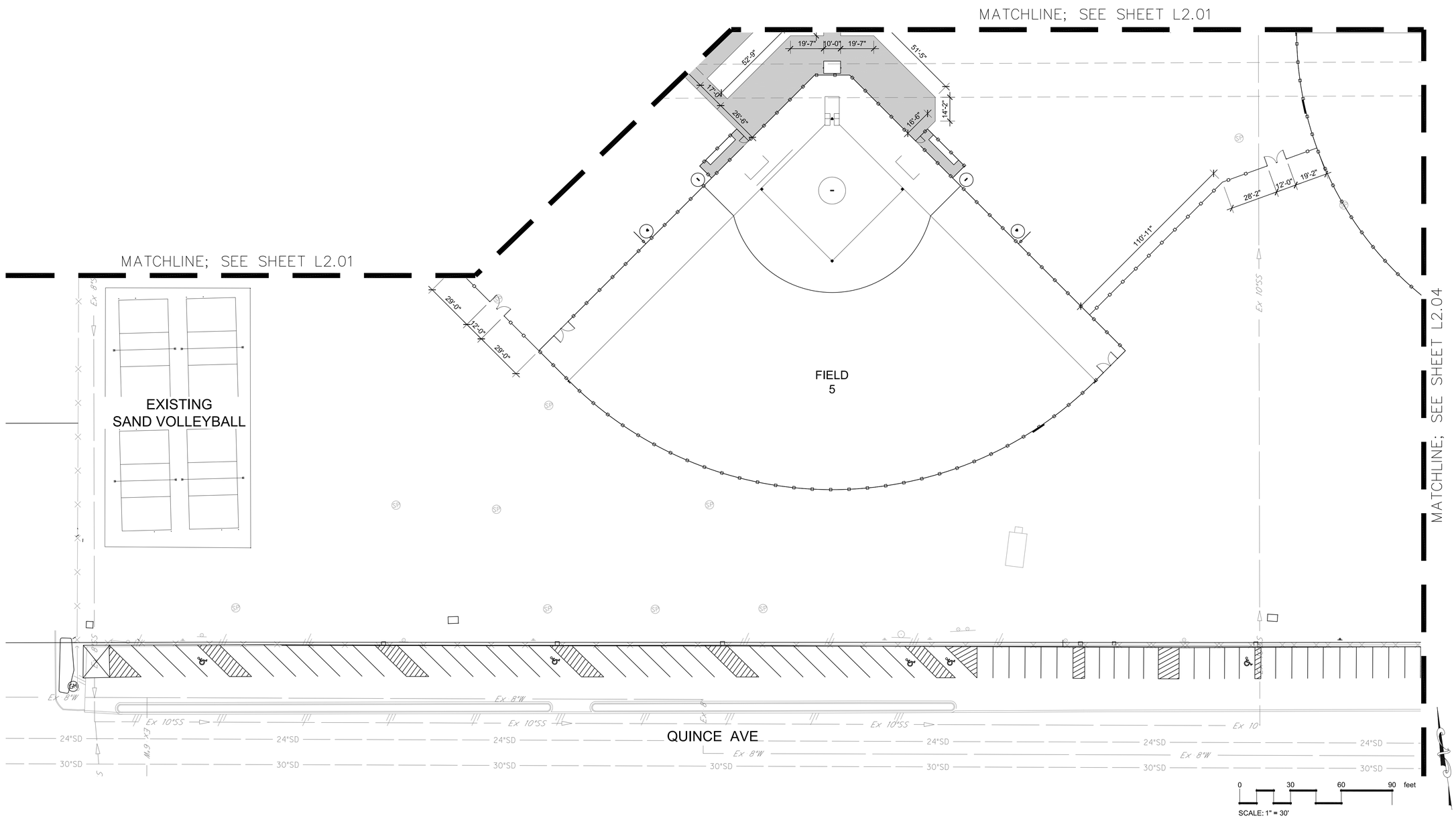

PLAN LEGEND:

P.A. - PLANTING AREA
P.O.B. - POINT OF BEGINNING
SIM. - SIMILAR
TYP. - TYPICAL

PLAN NOTES:

1. POINT OF BEGINNING: TIP OF FIELD 6 HOME PLATE. SEE SHEET L2.01. REFER TO CIVIL ENGINEERING PAVING & DIMENSION CONTROL PLAN (C1.01) FOR COORDINATES.
2. DIMENSIONS OF FIELDS 1, 2, AND 3; REF. SHEET L4.03; DIMENSIONS OF FIELDS 4, 5, AND 6; REF. SHEET L4.04

CITY OF McALLEN
SOFTBALL FIELD FACILITIES
MUNICIPAL PARK
McALLEN, TEXAS

HALFF
5000 WEST MILITARY HWY, SUITE 100
McALLEN, TX 78503
TEL (956) 682-0286
FAX (956) 684-0282
TBPE FIRM #F-312

Revision No.	Date	Description

REGISTERED LANDSCAPE ARCHITECT
TIMOTHY W. MUNN
1221
STATE OF TEXAS
07/11/2018

100%
CONSTRUCTION
DOCUMENTS

Project No.:	33348.001
Issued:	07/11/2018
Drawn By:	CE
Checked By:	TM
Scale:	AS SHOWN

Sheet Title

FLATWORK LAYOUT PLAN

L2.03
Sheet Number

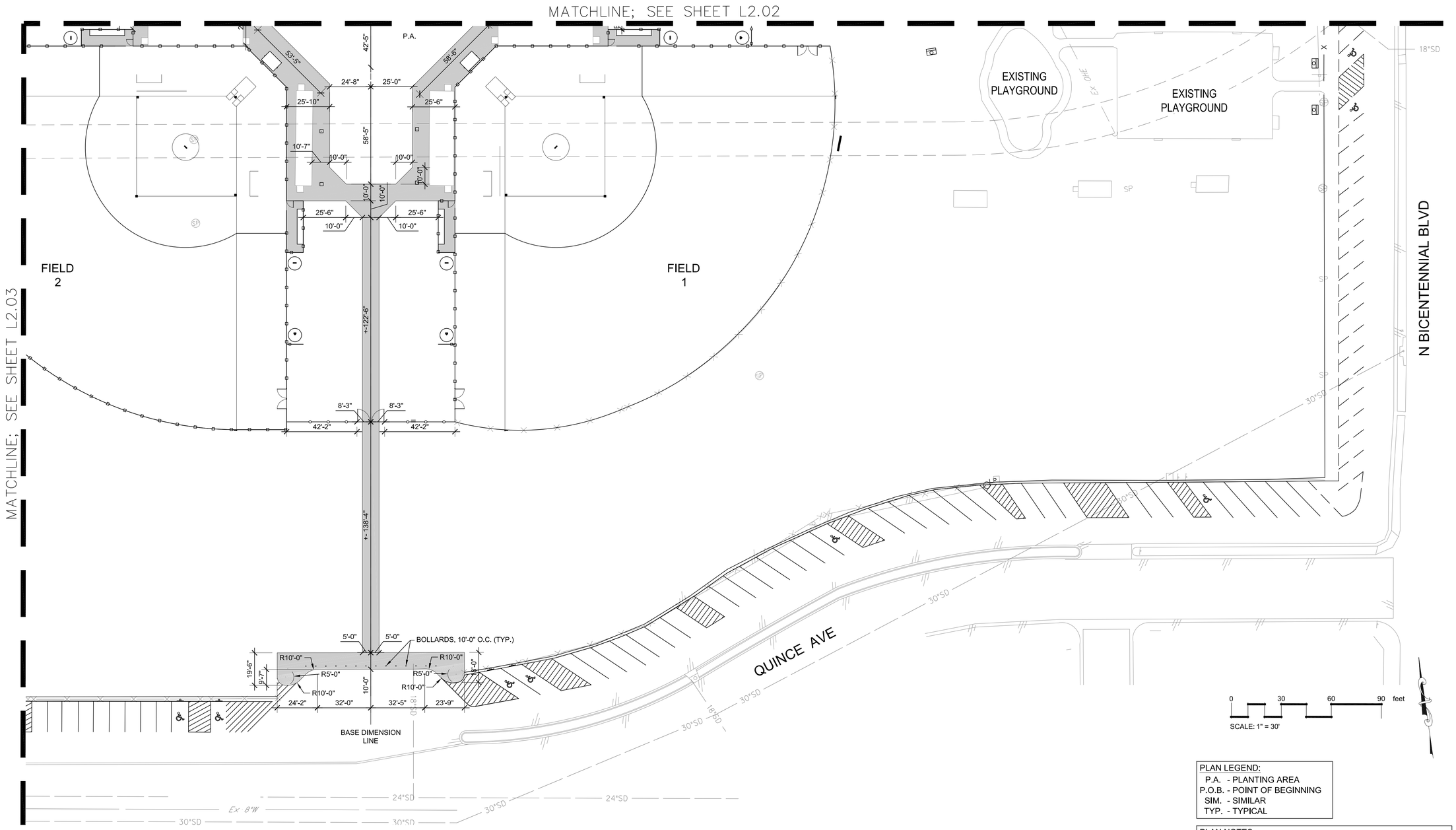

PLAN LEGEND:
P.A. - PLANTING AREA
P.O.B. - POINT OF BEGINNING
SIM. - SIMILAR
TYP. - TYPICAL

PLAN NOTES:
1. POINT OF BEGINNING: CENTERPOINT OF LANDSCAPE FEATURE, SEE SHEET L2.02. REFER TO CIVIL ENGINEERING PAVING & DIMENSION CONTROL PLAN (C1.02) FOR COORDINATES.
2. DIMENSIONS OF FIELDS 1, 2, AND 3: REF. SHEET L4.03; DIMENSIONS OF FIELDS 4, 5, AND 6; REF. SHEET L4.04

CITY OF McALLEN
SOFTBALL FIELD FACILITIES
MUNICIPAL PARK
McALLEN, TEXAS

McALLEN Parks & Recreation

HALFF
5000 WEST MILITARY HWY, SUITE 100
McALLEN, TX 78503
TEL (956) 682-0286
FAX (956) 684-0282
TBPE FIRM #F-312

Revision		
No.	Date	Description

REGISTERED LANDSCAPE ARCHITECT
TIMOTHY W. MAY
1221
STATE OF TEXAS
07/11/2018

100% CONSTRUCTION DOCUMENTS

Project No.:	33348.001
Issued:	07/11/2018
Drawn By:	CE
Checked By:	TM
Scale:	AS SHOWN
Sheet Title	

FLATWORK LAYOUT PLAN

L2.04
Sheet Number

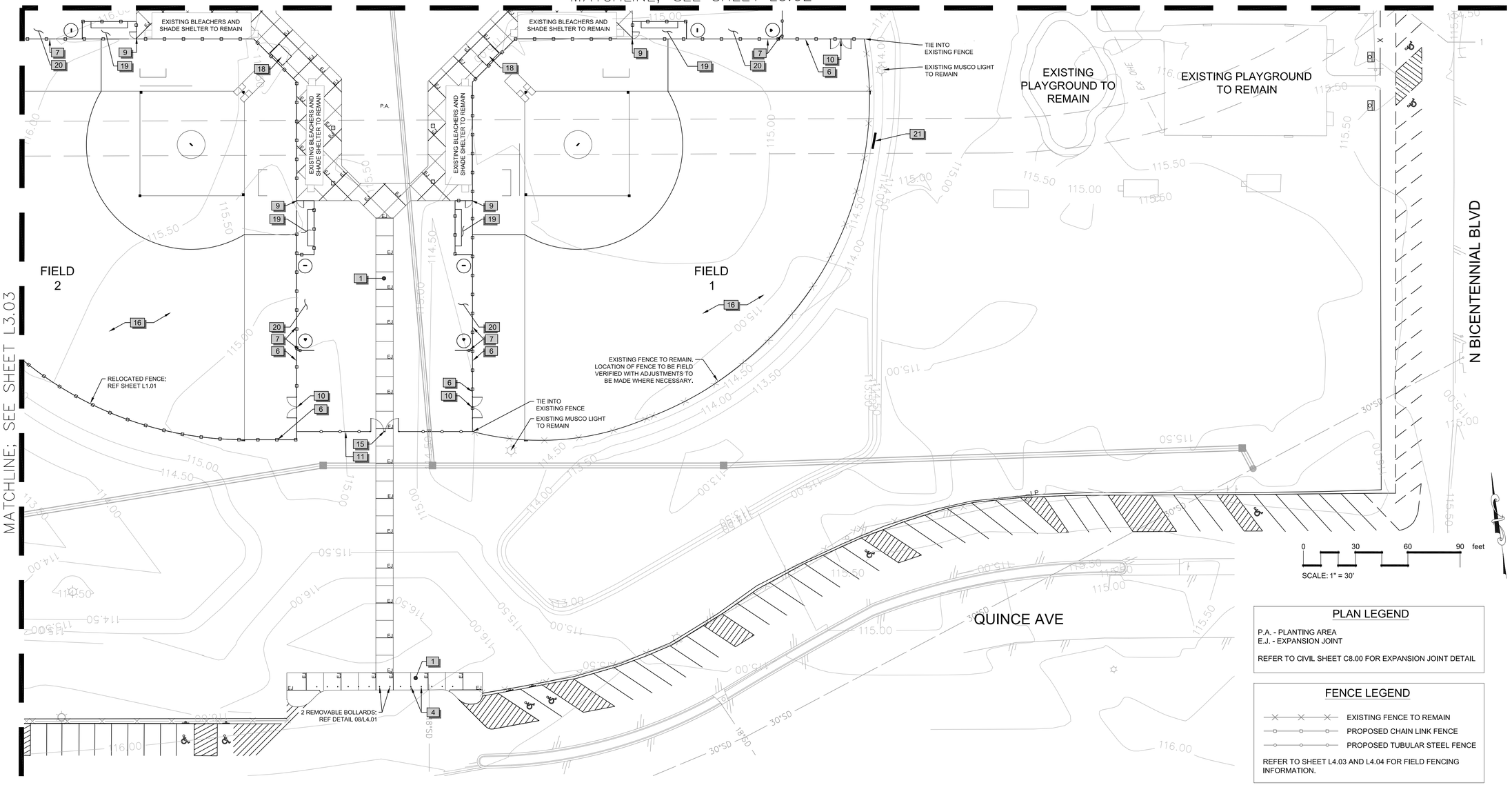

PLAN LEGEND

P.A. - PLANTING AREA
E.J. - EXPANSION JOINT

REFER TO CIVIL SHEET C8.00 FOR EXPANSION JOINT DETAIL

FENCE LEGEND

- EXISTING FENCE TO REMAIN
- PROPOSED CHAIN LINK FENCE
- PROPOSED TUBULAR STEEL FENCE

REFER TO SHEET L4.03 AND L4.04 FOR FIELD FENCING INFORMATION.

REFERENCE NOTES SCHEDULE

SYMBOL	DESCRIPTION	DETAIL
1	4" CONCRETE; REF. C8.00	
2	CONCRETE LANDSCAPE CURB	
3	FIBAR PLAYGROUND SURFACE; REF CIVIL SHEET C11.01	
4	BOLLARD	1/L4.01
5	FLAG POLE; 35` [H]; 6" BUTT DIA., 3.5" TOP DIA. 13`-9" TAPER LENGTH; 6`X10` MAX. FLAG SIZE, INSTALLED PER MANUFACTURER`S SPECIFICATIONS; SUBMIT PRODUCT FOR REVIEW AND APPROVAL BY LANDSCAPE ARCHITECT.	
6	6` HEIGHT FENCE - CHAIN LINK	4/L4.01
7	8` HEIGHT FENCE - CHAIN LINK	5/L4.01
8	6` HEIGHT SWING GATE - CHAIN LINK	8/L4.01
9	8` HEIGHT SWING GATE - CHAIN LINK	9/L4.01
10	6` HEIGHT DOUBLE SWING GATE - CHAIN LINK	7/L4.01
11	7` HEIGHT TUBULAR STEEL FENCE	1/L4.02
12	7`[H] X 8`[W] DOUBLE SWING GATE - TUBULAR STEEL	2/L4.02
13	7`[H] X 10`[W] DOUBLE SWING GATE - TUBULAR STEEL	
14	7`[H] X 12`[W] DOUBLE SWING GATE - TUBULAR STEEL	4/L4.02
15	7`[H] X 16`[W] DOUBLE SWING GATE - TUBULAR STEEL	5/L4.02
16	SOFTBALL FIELD LAYOUT - FIELDS 1, 2, AND 3	1/L4.03
17	SOFTBALL FIELD LAYOUT - FIELDS 4, 5, AND 6	1/L4.04
18	SCORE KEEPER`S CANOPY	2/L4.06
19	DUGOUT	4/L4.05
20	DUGOUT AND BULLPEN LAYOUT	5/L4.05
21	SCOREBOARD - FIELDS 4, 5, & 6	1/L4.05
22	BATTING TUNNEL	1/L4.06
23	RESTROOMS/CONCESSION; REF ARCHITECTURE	

ADD ALTERNATES

SYMBOL	DESCRIPTION	DETAIL
24	6` HEIGHT FENCE - CHAIN LINK (ALTERNATE NO.1)	4/L4.01
25	6` HEIGHT DOUBLE SWING GATE - CHAIN LINK (ALTERNATE NO.1)	7/L4.01
26	7` HEIGHT TUBULAR STEEL FENCE (ALTERNATE NO.1)	1/L4.02
27	7`[H] X 24`[W] DOUBLE SWING GATE - TUBULAR STEEL (ALTERNATE NO.1)	6/L4.02
28	CONCRETE PAD FOR MAINTENANCE BUILDING (ALTERNATE NO. 1); REF STRUCTURAL	
29	DUMPSTER ENCLOSURE; DUMPSTER BY OTHERS (ALTERNATE NO.1)	10/L4.01

CITY OF McALLEN
SOFTBALL FIELD FACILITIES
MUNICIPAL PARK
McALLEN, TEXAS

McALLEN Parks & Recreation

HALFF
5000 WEST MILITARY HWY, SUITE 100
McALLEN, TX 78503
TEL (956) 664-0286
FAX (956) 664-0282
TBPE FIRM #F-312

Revision No.	Date	Description

REGISTERED LANDSCAPE ARCHITECT TIMOTHY W. MAY 1221 STATE OF TEXAS
07/11/2018

100% CONSTRUCTION DOCUMENTS

Project No.:	33348.001
Issued:	07/11/2018
Drawn By:	CE
Checked By:	TM
Scale:	AS SHOWN
Sheet Title	SITE PLAN

L3.04
Sheet Number

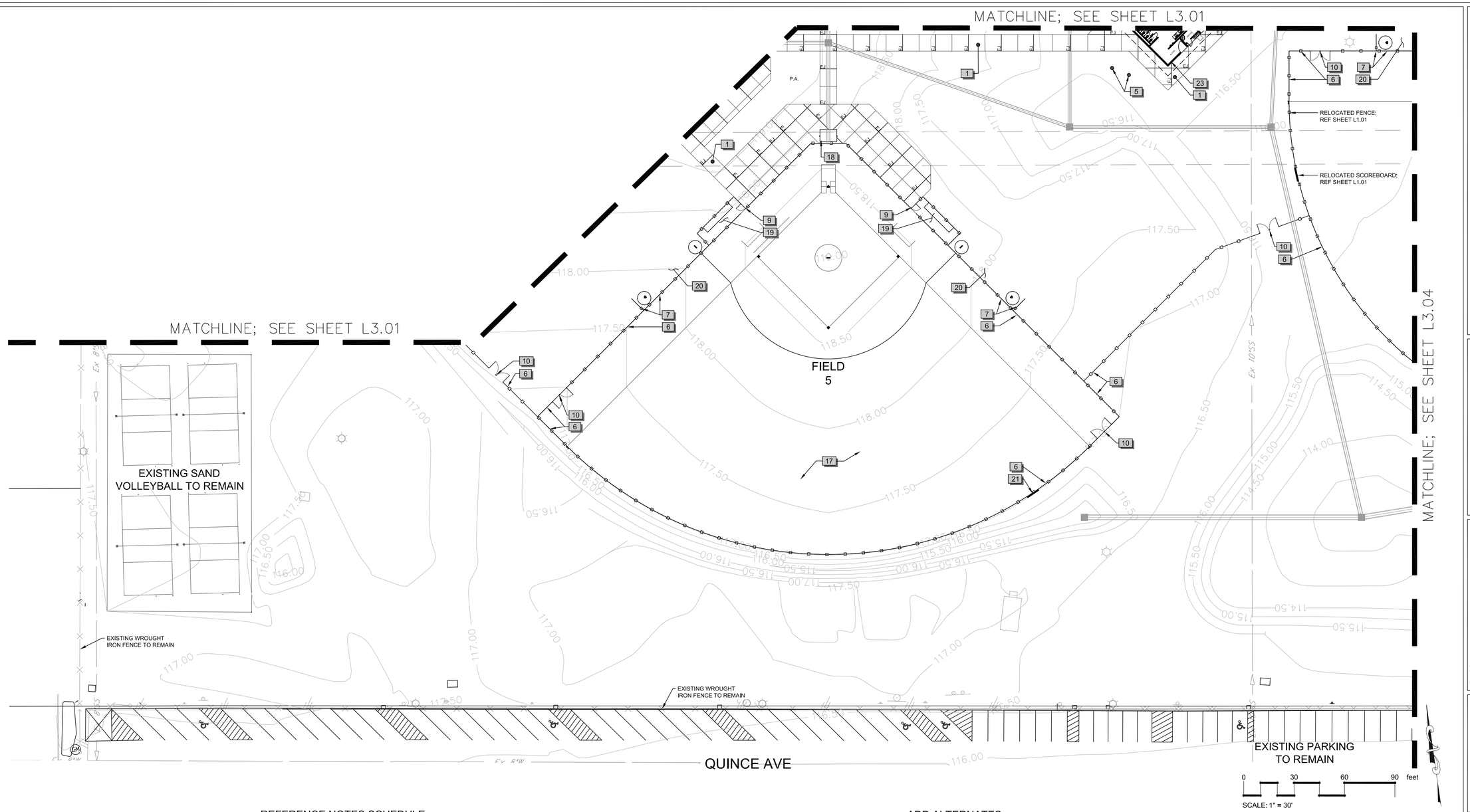

REFERENCE NOTES SCHEDULE

SYMBOL	DESCRIPTION	DETAIL
1	4" CONCRETE; REF. C8.00	
2	CONCRETE LANDSCAPE CURB	
3	FIBAR PLAYGROUND SURFACE; REF CIVIL SHEET C11.01	
4	BOLLARD	1/L4.01
5	FLAG POLE; 35` [H]; 6" BUTT DIA., 3.5" TOP DIA. 13`-9" TAPER LENGTH; 6`X10` MAX. FLAG SIZE, INSTALLED PER MANUFACTURER`S SPECIFICATIONS; SUBMIT PRODUCT FOR REVIEW AND APPROVAL BY LANDSCAPE ARCHITECT.	
6	6` HEIGHT FENCE - CHAIN LINK	4/L4.01
7	8` HEIGHT FENCE - CHAIN LINK	5/L4.01
8	6` HEIGHT SWING GATE - CHAIN LINK	8/L4.01
9	8` HEIGHT SWING GATE - CHAIN LINK	9/L4.01
10	6` HEIGHT DOUBLE SWING GATE - CHAIN LINK	7/L4.01
11	7` HEIGHT TUBULAR STEEL FENCE	1/L4.02
12	7`[H] X 8`[W] DOUBLE SWING GATE - TUBULAR STEEL	2/L4.02
13	7`[H] X 10`[W] DOUBLE SWING GATE - TUBULAR STEEL	
14	7`[H] X 12`[W] DOUBLE SWING GATE - TUBULAR STEEL	4/L4.02
15	7`[H] X 16`[W] DOUBLE SWING GATE - TUBULAR STEEL	5/L4.02
16	SOFTBALL FIELD LAYOUT - FIELDS 1, 2, AND 3	1/L4.03
17	SOFTBALL FIELD LAYOUT - FIELDS 4, 5, AND 6	1/L4.04
18	SCORE KEEPER`S CANOPY	2/L4.06
19	DUGOUT	4/L4.05
20	DUGOUT AND BULLPEN LAYOUT	5/L4.05
21	SCOREBOARD - FIELDS 4, 5, & 6	1/L4.05
22	BATTING TUNNEL	1/L4.06
23	RESTROOMS/CONCESSION; REF ARCHITECTURE	

ADD ALTERNATES

SYMBOL	DESCRIPTION	DETAIL
24	6` HEIGHT FENCE - CHAIN LINK (ALTERNATE NO.1)	4/L4.01
25	6` HEIGHT DOUBLE SWING GATE - CHAIN LINK (ALTERNATE NO.1)	7/L4.01
26	7` HEIGHT TUBULAR STEEL FENCE (ALTERNATE NO.1)	1/L4.02
27	7`[H] X 24`[W] DOUBLE SWING GATE - TUBULAR STEEL (ALTERNATE NO.1)	6/L4.02
28	CONCRETE PAD FOR MAINTENANCE BUILDING (ALTERNATE NO. 1); REF STRUCTURAL	
29	DUMPSTER ENCLOSURE; DUMPSTER BY OTHERS (ALTERNATE NO.1)	10/L4.01

PLAN LEGEND

P.A. - PLANTING AREA
E.J. - EXPANSION JOINT

REFER TO CIVIL SHEET C8.00 FOR EXPANSION JOINT DETAIL

FENCE LEGEND

EXISTING FENCE TO REMAIN
PROPOSED CHAIN LINK FENCE
PROPOSED TUBULAR STEEL FENCE

REFER TO SHEET L4.03 AND L4.04 FOR FIELD FENCING INFORMATION.

CITY OF McALLEN
SOFTBALL FIELD FACILITIES
MUNICIPAL PARK
McALLEN, TEXAS

McALLEN Parks & Recreation

HALFF
5000 WEST MILITARY HWY. SUITE 100
McALLEN, TX 78503
TEL (956) 682-0286
FAX (956) 684-0282
TBPE FIRM #F-312

No.	Date	Revision Description

REGISTERED LANDSCAPE ARCHITECT
TIMOTHY W. MAY
1221
STATE OF TEXAS
07/11/2018

100%
CONSTRUCTION
DOCUMENTS

Project No.:	33348.001
Issued:	07/11/2018
Drawn By:	CE
Checked By:	TM
Scale:	AS SHOWN

Sheet Title
SITE PLAN

L3.03
Sheet Number

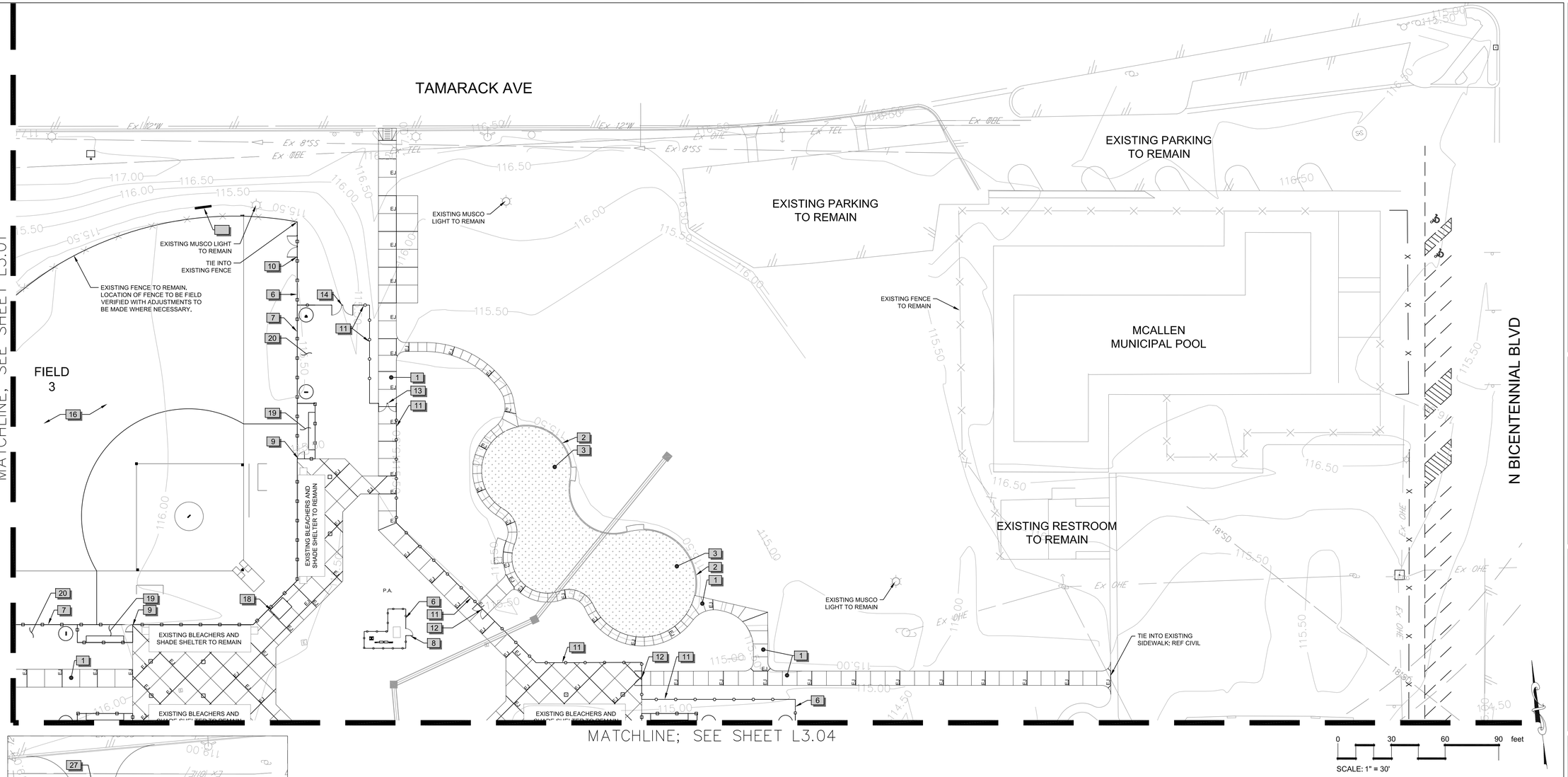

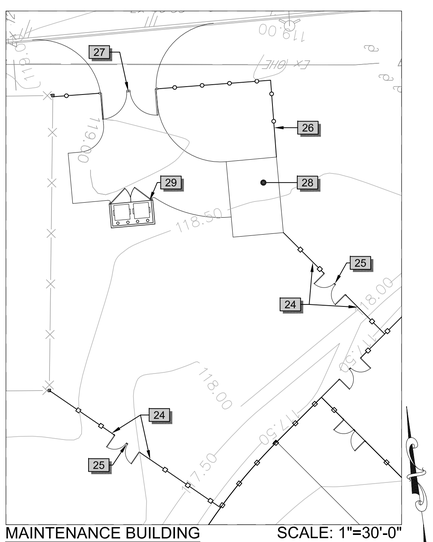

MAINTENANCE BUILDING (ALTERNATE NO. 1) SCALE: 1"=30'-0"

REFERENCE NOTES SCHEDULE

SYMBOL	DESCRIPTION	DETAIL
1	4" CONCRETE; REF. C8.00	
2	CONCRETE LANDSCAPE CURB	
3	FIBAR PLAYGROUND SURFACE; REF CIVIL SHEET C11.01	
4	BOLLARD	1/L4.01
5	FLAG POLE; 35` [H]; 6" BUTT DIA., 3.5" TOP DIA. 13`-9" TAPER LENGTH; 6`X10` MAX. FLAG SIZE, INSTALLED PER MANUFACTURER`S SPECIFICATIONS; SUBMIT PRODUCT FOR REVIEW AND APPROVAL BY LANDSCAPE ARCHITECT.	
6	6` HEIGHT FENCE - CHAIN LINK	4/L4.01
7	8` HEIGHT FENCE - CHAIN LINK	5/L4.01
8	6` HEIGHT SWING GATE - CHAIN LINK	8/L4.01
9	8` HEIGHT SWING GATE - CHAIN LINK	9/L4.01
10	6` HEIGHT DOUBLE SWING GATE - CHAIN LINK	7/L4.01
11	7` HEIGHT TUBULAR STEEL FENCE	1/L4.02
12	7`[H] X 8`[W] DOUBLE SWING GATE - TUBULAR STEEL	2/L4.02
13	7`[H] X 10`[W] DOUBLE SWING GATE - TUBULAR STEEL	
14	7`[H] X 12`[W] DOUBLE SWING GATE - TUBULAR STEEL	4/L4.02
15	7`[H] X 16`[W] DOUBLE SWING GATE - TUBULAR STEEL	5/L4.02
16	SOFTBALL FIELD LAYOUT - FIELDS 1, 2, AND 3	1/L4.03
17	SOFTBALL FIELD LAYOUT - FIELDS 4, 5, AND 6	1/L4.04
18	SCORE KEEPER`S CANOPY	2/L4.06
19	DUGOUT	4/L4.05
20	DUGOUT AND BULLPEN LAYOUT	5/L4.05
21	SCOREBOARD - FIELDS 4, 5, & 6	1/L4.05
22	BATTING TUNNEL	1/L4.06
23	RESTROOMS/CONCESSION; REF ARCHITECTURE	

ADD ALTERNATES

SYMBOL	DESCRIPTION	DETAIL
24	6` HEIGHT FENCE - CHAIN LINK (ALTERNATE NO.1)	4/L4.01
25	6` HEIGHT DOUBLE SWING GATE - CHAIN LINK (ALTERNATE NO.1)	7/L4.01
26	7` HEIGHT TUBULAR STEEL FENCE (ALTERNATE NO.1)	1/L4.02
27	7`[H] X 24`[W] DOUBLE SWING GATE - TUBULAR STEEL (ALTERNATE NO.1)	6/L4.02
28	CONCRETE PAD FOR MAINTENANCE BUILDING (ALTERNATE NO. 1); REF STRUCTURAL	
29	DUMPSTER ENCLOSURE; DUMPSTER BY OTHERS (ALTERNATE NO.1)	10/L4.01

PLAN LEGEND

P.A. - PLANTING AREA
E.J. - EXPANSION JOINT

REFER TO CIVIL SHEET C8.00 FOR EXPANSION JOINT DETAIL

FENCE LEGEND

- EXISTING FENCE TO REMAIN
- PROPOSED CHAIN LINK FENCE
- PROPOSED TUBULAR STEEL FENCE

REFER TO SHEET L4.03 AND L4.04 FOR FIELD FENCING INFORMATION.

CITY OF McALLEN
SOFTBALL FIELD FACILITIES
MUNICIPAL PARK
McALLEN, TEXAS

McALLEN Parks & Recreation

HALFF
5000 WEST MILITARY HWY, SUITE 100
McALLEN, TX 78503
TEL (956) 682-0286
FAX (956) 684-0282
TBPE FIRM #F-312

Revision		
No.	Date	Description

REGISTERED LANDSCAPE ARCHITECT
TIMOTHY W. MAY
1221
STATE OF TEXAS
07/11/2018

100% CONSTRUCTION DOCUMENTS

Project No.:	33348.001
Issued:	07/11/2018
Drawn By:	CE
Checked By:	TM
Scale:	AS SHOWN
Sheet Title	SITE PLAN

L3.02
Sheet Number

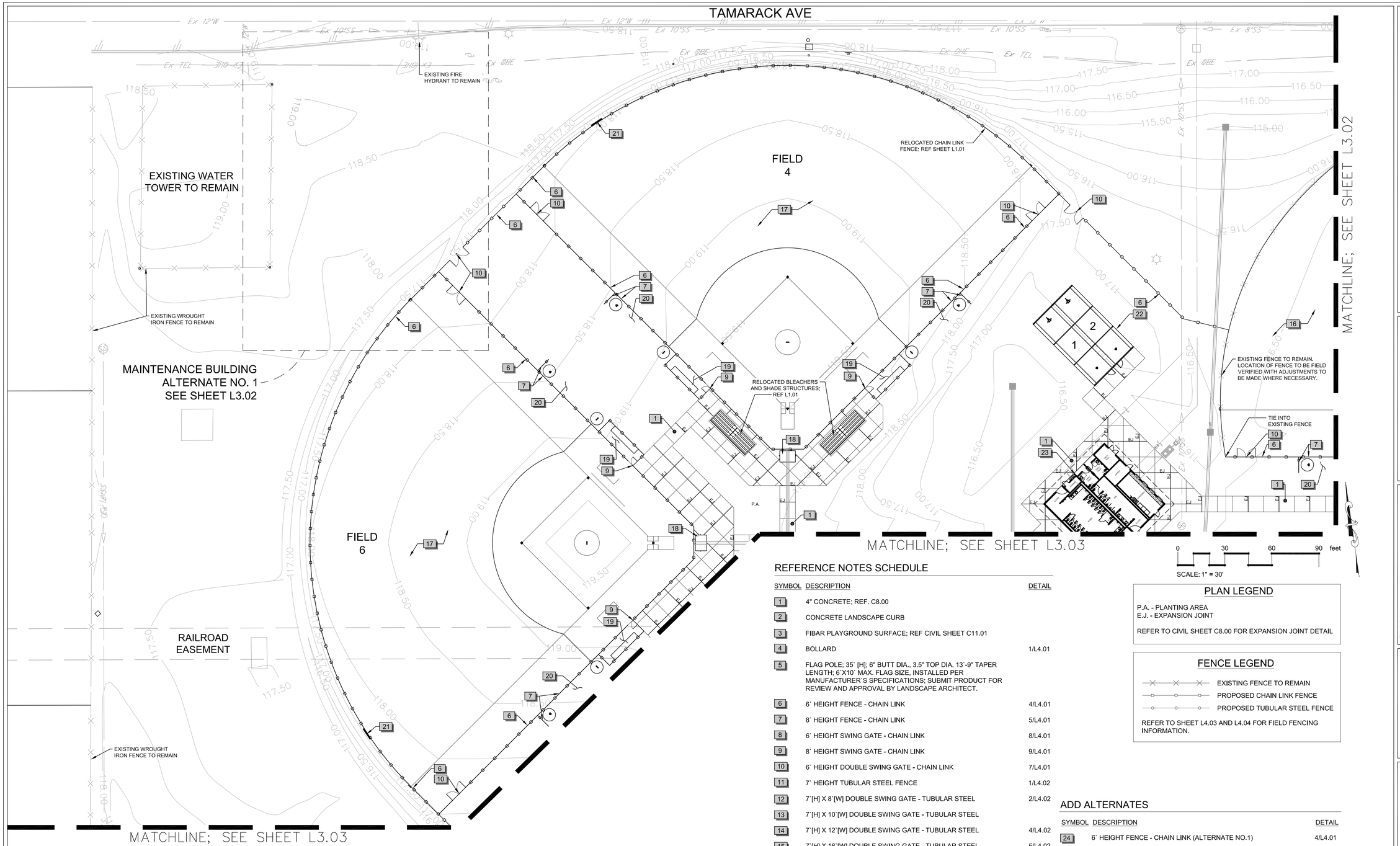

REFERENCE NOTES SCHEDULE

SYMBOL	DESCRIPTION	DETAIL
1	4" CONCRETE; REF. C8.00	
2	CONCRETE LANDSCAPE CURB	
3	FIBAR PLAYGROUND SURFACE; REF CIVIL SHEET C11.01	
4	BOLLARD	1/L4.01
5	FLAG POLE; 35' [H]; 6" BUTT DIA., 3.5" TOP DIA. 13'-9" TAPER LENGTH; 6'X10' MAX. FLAG SIZE, INSTALLED PER MANUFACTURER'S SPECIFICATIONS; SUBMIT PRODUCT FOR REVIEW AND APPROVAL BY LANDSCAPE ARCHITECT.	
6	6' HEIGHT FENCE - CHAIN LINK	4/L4.01
7	8' HEIGHT FENCE - CHAIN LINK	5/L4.01
8	6' HEIGHT SWING GATE - CHAIN LINK	8/L4.01
9	8' HEIGHT SWING GATE - CHAIN LINK	9/L4.01
10	6' HEIGHT DOUBLE SWING GATE - CHAIN LINK	7/L4.01
11	7' HEIGHT TUBULAR STEEL FENCE	1/L4.02
12	7'[H] X 8'[W] DOUBLE SWING GATE - TUBULAR STEEL	2/L4.02
13	7'[H] X 10'[W] DOUBLE SWING GATE - TUBULAR STEEL	
14	7'[H] X 12'[W] DOUBLE SWING GATE - TUBULAR STEEL	4/L4.02
15	7'[H] X 16'[W] DOUBLE SWING GATE - TUBULAR STEEL	5/L4.02
16	SOFTBALL FIELD LAYOUT - FIELDS 1, 2, AND 3	1/L4.03
17	SOFTBALL FIELD LAYOUT - FIELDS 4, 5, AND 6	1/L4.04
18	SCORE KEEPER'S CANOPY	2/L4.06
19	DUGOUT	4/L4.05
20	DUGOUT AND BULLPEN LAYOUT	5/L4.05
21	SCOREBOARD - FIELDS 4, 5, & 6	1/L4.05
22	BATTING TUNNEL	1/L4.06
23	RESTROOMS/CONCESSION; REF ARCHITECTURE	

PLAN LEGEND

P.A. - PLANTING AREA
E.J. - EXPANSION JOINT

REFER TO CIVIL SHEET C8.00 FOR EXPANSION JOINT DETAIL

FENCE LEGEND

- EXISTING FENCE TO REMAIN
- PROPOSED CHAIN LINK FENCE
- PROPOSED TUBULAR STEEL FENCE

REFER TO SHEET L4.03 AND L4.04 FOR FIELD FENCING INFORMATION.

ADD ALTERNATES

SYMBOL	DESCRIPTION	DETAIL
24	6' HEIGHT FENCE - CHAIN LINK (ALTERNATE NO.1)	4/L4.01
25	6' HEIGHT DOUBLE SWING GATE - CHAIN LINK (ALTERNATE NO.1)	7/L4.01
26	7' HEIGHT TUBULAR STEEL FENCE (ALTERNATE NO.1)	1/L4.02
27	7'[H] X 24'[W] DOUBLE SWING GATE - TUBULAR STEEL (ALTERNATE NO.1)	6/L4.02
28	CONCRETE PAD FOR MAINTENANCE BUILDING (ALTERNATE NO. 1); REF STRUCTURAL	
29	DUMPSTER ENCLOSURE; DUMPSTER BY OTHERS (ALTERNATE NO.1)	10/L4.01

CITY OF McALLEN
SOFTBALL FIELD FACILITIES
MUNICIPAL PARK
McALLEN, TEXAS

McALLEN Parks & Recreation

HALFF
5000 WEST MILITARY HWY. SUITE 100
McALLEN, TX 78503
TEL (956) 664-0086
FAX (956) 664-0282
TBPE FIRM #F-312

Revision No.	Date	Description

REGISTERED LANDSCAPE ARCHITECT
TIMOTHY W. M.
1221
STATE OF TEXAS
07/11/2018

100% CONSTRUCTION DOCUMENTS

Project No.:	33348.001
Issued:	07/11/2018
Drawn By:	CE
Checked By:	TM
Scale:	AS SHOWN

Sheet Title
SITE PLAN

L3.01
Sheet Number

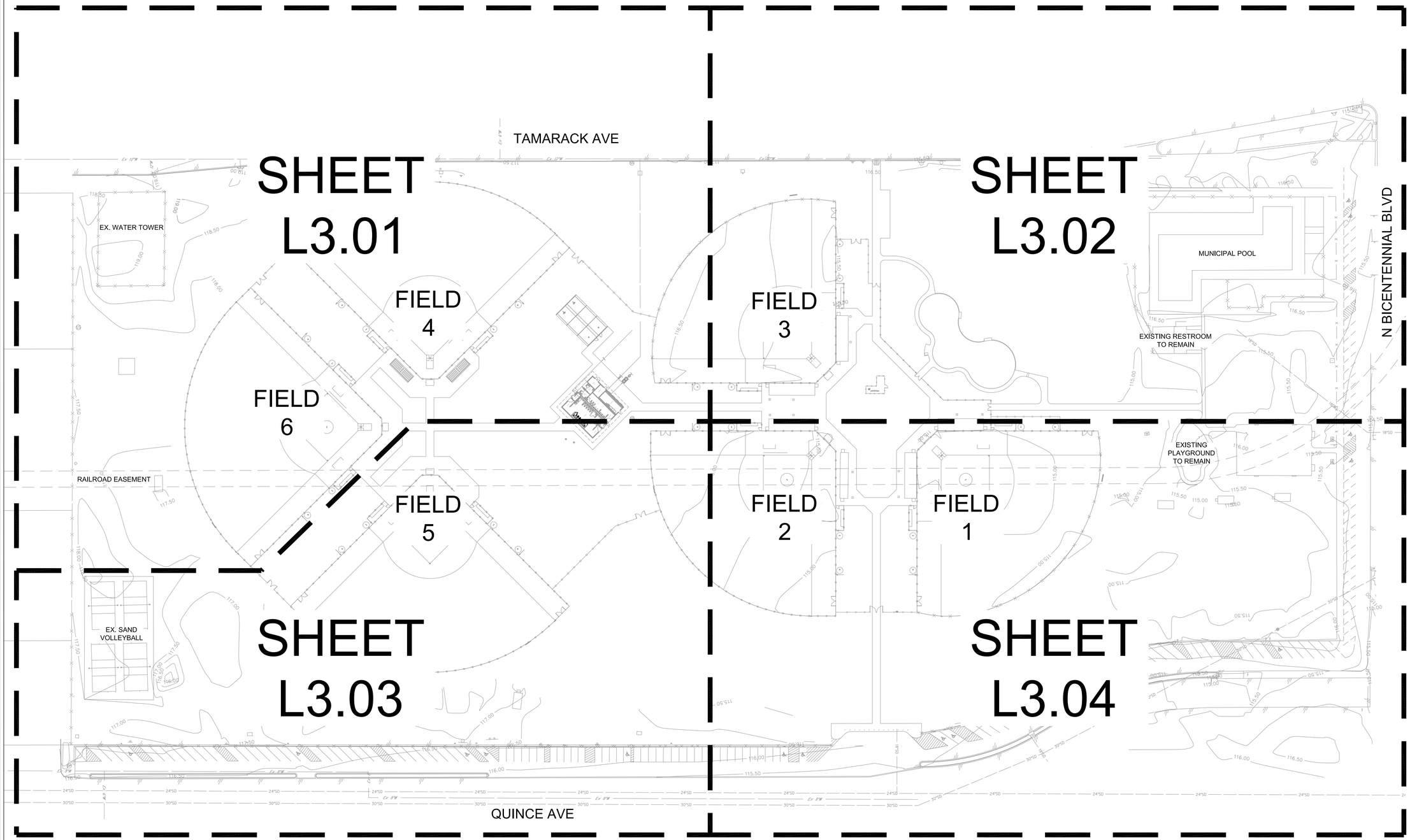

0 60 120 180 feet

SCALE: 1" = 60'

CITY OF McALLEN
SOFTBALL FIELD FACILITIES
MUNICIPAL PARK
McALLEN, TEXAS

McALLEN Parks & Recreation

HALFF
5000 WEST MILITARY HWY, SUITE 100
McALLEN, TX 78503
TEL (956) 682-0286
FAX (956) 684-0282
TBPE FIRM #F-312

Revision		
No.	Date	Description

REGISTERED LANDSCAPE ARCHITECT
TIMOTHY W. MUNN
1221
STATE OF TEXAS
07/11/2018

100%
CONSTRUCTION
DOCUMENTS

Project No.:	33348.001
Issued:	07/11/2018
Drawn By:	CE
Checked By:	TM
Scale:	AS SHOWN

Sheet Title

KEY MAP

L3.00

Sheet Number

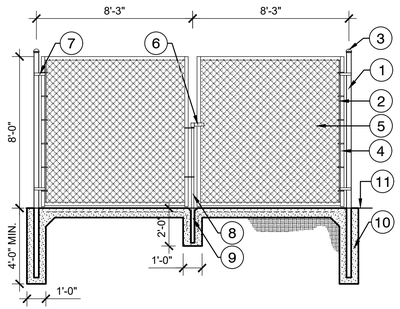

KEY:
1. 3" Ø STEEL POST
2. TENSION BAR
3. POST CAP
4. 2" O.D. FRAME
5. 2" DIAMOND MESH VINYL COATED CHAIN LINK FABRIC; KNUCKLE SELVAGE; WITH PDS PRIVACY SLATS
6. GATE LATCH, TYP.
7. GATE HINGE, TYP.
8. CENTER DROP ROD ASSEMBLY
9. CENTER DROP ROD CATCH SET IN CONCRETE
10. CONCRETE FOOTING, TYP.
11. FINISH CONCRETE; REF CIVIL

11 DUMPSTER ENCLOSURE GATE

ALTERNATE NO.1

1/4" = 1'-0"

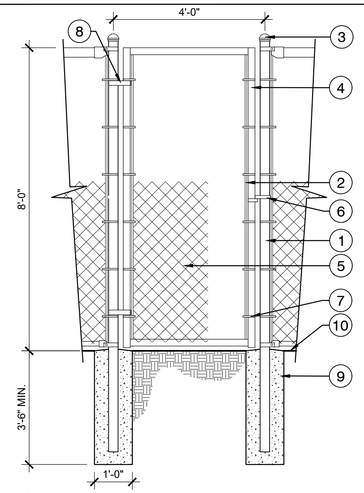

KEY:
1. 3" Ø STEEL POST
2. TENSION BAR
3. POST CAP
4. 2" O.D. FRAME
5. 2" DIAMOND MESH CHAIN LINK FABRIC; KNUCKLE SELVAGE
6. GATE LATCH, TYP.
7. BRACE BAND
8. GATE HINGE
9. CONCRETE FOOTING, TYP.
10. FINISH GRADE

9 8` HEIGHT SWING GATE - CHAIN LINK

1/2" = 1'-0"

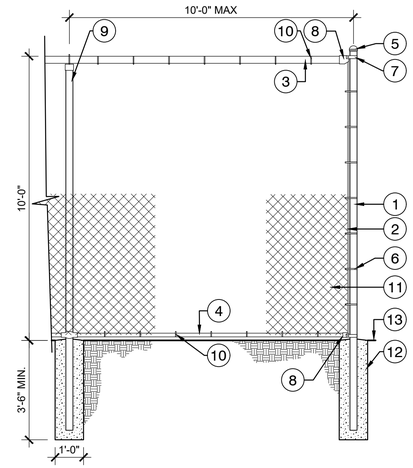

KEY:
1. 3" Ø CORNER/END POST
2. TENSION BAR
3. 2-$\frac{3}{8}$" Ø TOP RAIL
4. 1-$\frac{5}{8}$" BOTTOM RAIL
5. POST CAP
6. TENSION BAND 15" O.C.
7. BRACE BAND
8. RAIL END CUP
9. LINE POST W/ LOOP CAP
10. FABRIC TIE 15" O.C.
11. 2" DIAMOND MESH CHAIN LINK FABRIC; KNUCKLE SELVAGE
12. CONCRETE FOOTING, TYP.
13. FINISH GRADE

6 10` HEIGHT FENCE - CHAIN LINK

3/8" = 1'-0"

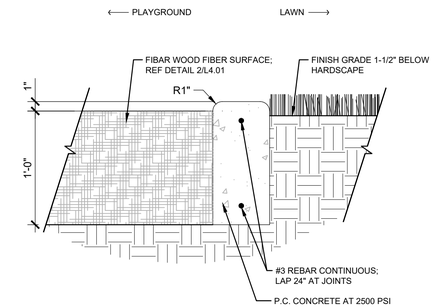

3 PLAYGROUND CURB

1 1/2" = 1'-0"

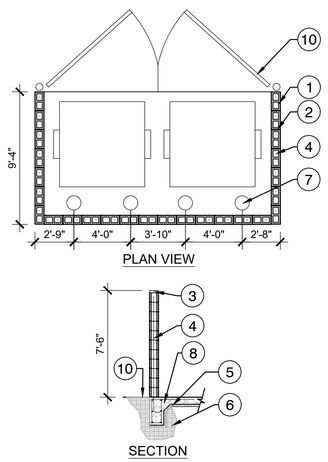

KEY:
1. CMU BLOCK SPLIT FACE BOTH SIDES TO MATCH RESTROOM; 8X8X16. FILL ALL CELLS WITH MORTAR
2. 3/8" GAPS BETWEEN CMU BLOCKS TO BE FILLED WITH MORTAR
3. 2" THICK SPLIT FACE BOTH SIDES CMU CAP CONT.
4. #5 REBAR, SPACED EVERY OTHER CMU CELL @ 16" O.C. TIE INTO CONCRETE FOOTING REBAR. "L" BOTTOM OF BARS AND PLACE MINIMUM 12" INTO FOOTING
5. 2" MINIMUM LEVELING SAND LAYER
6. COMPACTED SUBGRADE TO 95% MAX DENSITY
7. BOLLARD, TYP. REF DETAIL 1/L4.01
8. 6" CONCRETE PAD; REF CIVIL
9. DUMPSTER ENCLOSURE GATE; REF DETAIL 11/L4.01
10. FINISH GRADE

10 DUMPSTER ENCLOSURE

ALTERNATE NO.1

3/16" = 1'-0"

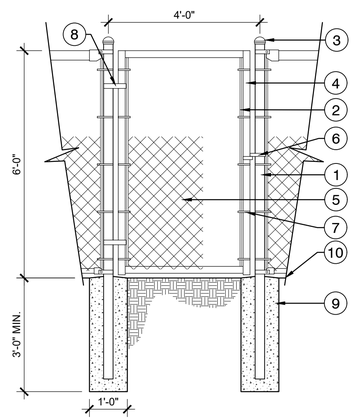

KEY:
1. 3" Ø STEEL POST
2. TENSION BAR
3. POST CAP
4. 2" O.D. FRAME
5. 2" DIAMOND MESH CHAIN LINK FABRIC; KNUCKLE SELVAGE
6. GATE LATCH, TYP.
7. BRACE BAND
8. GATE HINGE
9. CONCRETE FOOTING, TYP.
10. FINISH GRADE

8 6` HEIGHT SWING GATE - CHAIN LINK

1/2" = 1'-0"

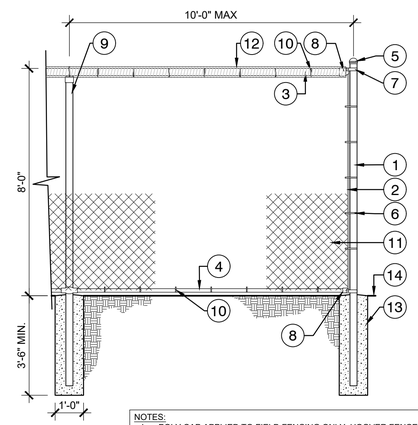

NOTES:
1. POLY CAP APPLIED TO FIELD FENCING ONLY; HOOVER FENCE CO.; HOOVERFENCE.COM, ITEM NO. POLY-CAP; TEL: (330) 358-2335

KEY:
1. 3" Ø CORNER/END POST
2. TENSION BAR
3. 2-$\frac{3}{8}$" Ø TOP RAIL
4. 1-$\frac{5}{8}$" BOTTOM RAIL
5. POST CAP
6. TENSION BAND 15" O.C.
7. BRACE BAND
8. RAIL END CUP
9. LINE POST W/ LOOP CAP
10. FABRIC TIE 15" O.C.
11. 2" DIAMOND MESH CHAIN LINK FABRIC; KNUCKLE SELVAGE
12. 4-$\frac{1}{2}$" Ø POLY CAP FENCE CROWN
13. CONCRETE FOOTING, TYP.
14. FINISH GRADE

5 8` HEIGHT FENCE - CHAIN LINK

3/8" = 1'-0"

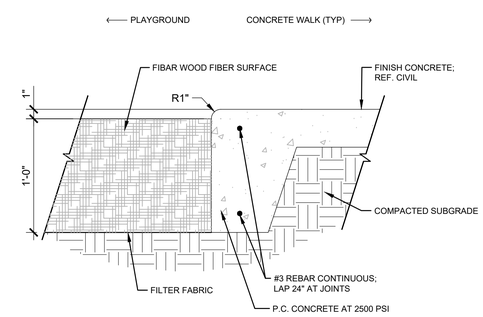

NOTES:
1. FIBAR BULK FOR PLAYGROUNDS; FIBAR PLAYGROUND SURFACES
2. LEA PARK AND PLAY, LEAPARKANDPLAY.COM; CONTACT: JONATHAN MCJUNKIN, EMAIL: JONATHAN@LEAPARKANDPLAY.COM, TEL: (830) 302-6938
3. PLACE FIBAR BULK ENGINEERED WOOD FIBER IN AREAS INDICATED ON SHEET L3.02
4. PLACE FIBAR SAFETY SURFACE IMMEDIATELY AFTER INSTALLING PLAYGROUND EQUIPMENT
5. INSTALL PER MANUFACTURER'S SPECIFICATIONS

2 FIBAR PLAYGROUND SURFACE

1 1/2" = 1'-0"

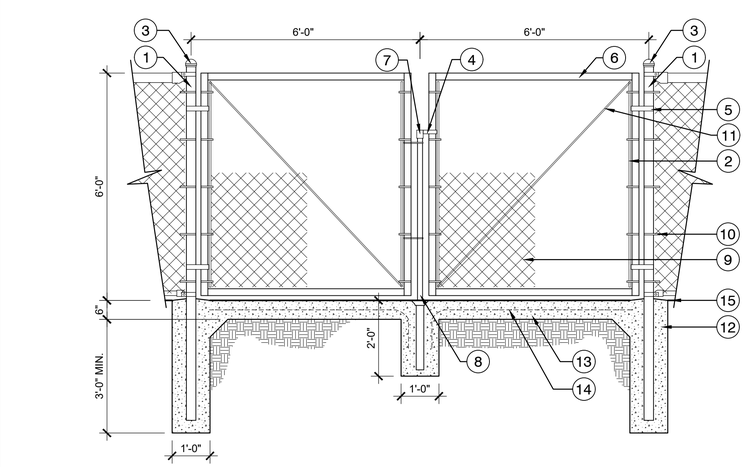

KEY:
1. 3" Ø STEEL POST
2. TENSION BAR
3. POST CAP
4. GATE LATCH, TYP.
5. GATE HINGE, TYP.
6. 2" O.D. FRAME
7. CENTER DROP ROD ASSEMBLY
8. CENTER DROP ROD CATCH SET IN CONCRETE
9. 2" DIAMOND MESH CHAIN LINK FABRIC; KNUCKLE SELVAGE
10. BRACE BAND
11. $\frac{3}{8}$" TRUSS RODS, TYP.
12. CONCRETE FOOTING, TYP.
13. 6" [D] X 12" [W] CONCRETE MOW STRIP; TO SPAN LENGTH OF GATE
14. #3 REBAR
15. FINISH GRADE

7 6` HEIGHT DOUBLE SWING GATE - CHAIN LINK

1/2" = 1'-0"

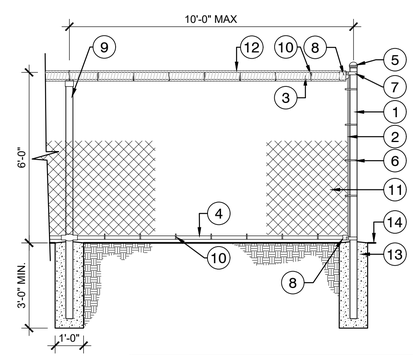

NOTES:
1. POLY CAP APPLIED TO FIELD FENCING ONLY; HOOVER FENCE CO.; HOOVERFENCE.COM, ITEM NO. POLY-CAP; TEL: (330) 358-2335

KEY:
1. 3" Ø CORNER/END POST
2. TENSION BAR
3. 2-$\frac{3}{8}$" Ø TOP RAIL
4. 1-$\frac{5}{8}$" BOTTOM RAIL
5. POST CAP
6. TENSION BAND 15" O.C.
7. BRACE BAND
8. RAIL END CUP
9. LINE POST W/ LOOP CAP
10. FABRIC TIE 15" O.C.
11. 2" DIAMOND MESH CHAIN LINK FABRIC; KNUCKLE SELVAGE
12. 4-$\frac{1}{2}$" Ø POLY CAP FENCE CROWN
13. CONCRETE FOOTING, TYP.
14. FINISH GRADE

4 6` HEIGHT FENCE - CHAIN LINK

3/8" = 1'-0"

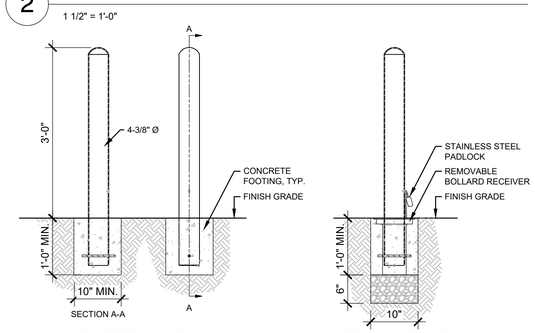

NOTES:
1. RELIANCE FOUNDRY EMBEDDED STEEL BOLLARD, MODEL NO. R-7902, POWDER COATED STEEL; OR APPROVED EQUAL; COLOR: BLACK; EMBEDDED BOLLARDS TO HAVE YELLOW REFLECTIVE STRIPE. REMOVABLE BOLLARDS TO HAVE WHITE REFLECTIVE STRIPE.
2. RECEIVER ASSEMBLY WITH HINGED LID, MODEL NO. R7901R, GALVANIZED STEEL WITH 316 STAINLESS STEEL COVER; TO BE USED WHERE NOTED ON PLAN, QTY: 2
3. OPTIONAL STAINLESS STEEL PADLOCK LOCKS BOLLARD TO BOLLARD RECEIVER
4. INSTALL PER MANUFACTURER'S SPECIFICATIONS
5. RELIANCE-FOUNDRY.COM; CONTACT: CONNER DONE, TEL. (604) 592-4325

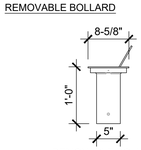

REMOVABLE BOLLARD RECEIVER

1 BOLLARD

3/4" = 1'-0"

CITY OF McALLEN
SOFTBALL FIELD FACILITIES
MUNICIPAL PARK
McALLEN, TEXAS

McALLEN Parks & Recreation

HALFF
5000 WEST MILITARY HWY, SUITE 100
McALLEN, TX 78503
TEL (956) 682-0286
FAX (956) 684-0282
TBPE FIRM #F-312

Revision	
No.	Date	Description

REGISTERED LANDSCAPE ARCHITECT
TIMOTHY W. M.
1221
STATE OF TEXAS
07/11/2018

100% CONSTRUCTION DOCUMENTS

Project No.:	33348.001
Issued:	07/11/2018
Drawn By:	CE
Checked By:	TM
Scale:	AS SHOWN
Sheet Title	SITE DETAILS
Sheet Number	L4.01

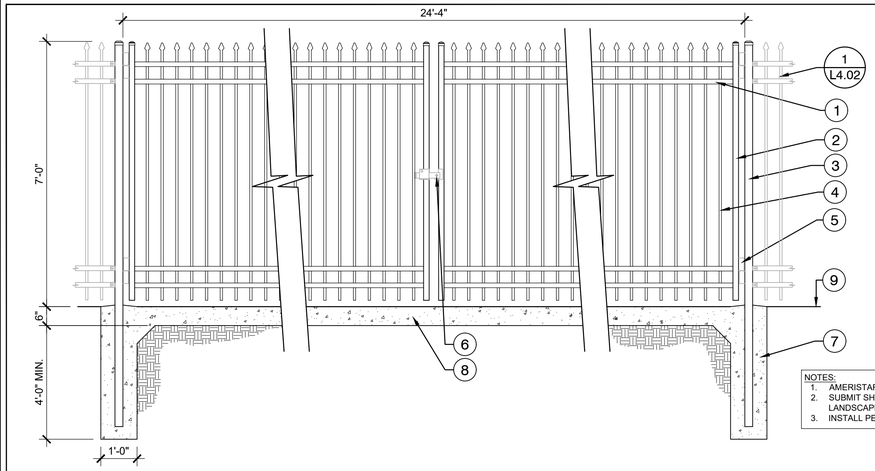

KEY:

1. 1-5/8" MONTAGE PLUS RAIL
2. GATE UPRIGHT; 1-3/8" X 14 GAUGE
3. POST; 4" X 12 GAUGE
4. PICKET; 3/4" X 14 GAUGE
5. WELD ON BOX HINGE
6. GATE LATCH
7. CONCRETE FOOTING, TYP.
8. CONCRETE DRIVE; REF CIVIL
9. FINISH GRADE

NOTES:
1. AMERISTAR MONTAGE COMMERCIAL DOUBLE SWING GATE
2. SUBMIT SHOP DRAWINGS TO BE APPROVED BY LANDSCAPE ARCHITECT
3. INSTALL PER MANUFACTURER'S SPECIFICATIONS

6 7`[H] X 24`[W] DOUBLE SWING GATE - TUBULAR STEEL

ALTERNATE NO.1

1/2" = 1'-0"

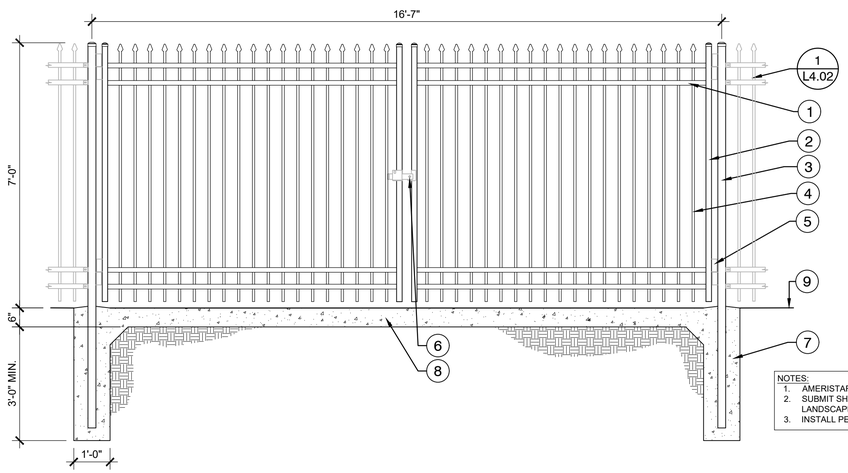

KEY:

1. 1-5/8" MONTAGE PLUS RAIL
2. GATE UPRIGHT; 1-3/8" X 14 GAUGE
3. POST; 4" X 12 GAUGE
4. PICKET; 3/4" X 14 GAUGE
5. WELD ON BOX HINGE
6. GATE LATCH
7. CONCRETE FOOTING, TYP.
8. 6" [D] X 12" [W] CONCRETE MOW STRIP; TO SPAN LENGTH OF GATE
9. FINISH GRADE

NOTES:
1. AMERISTAR MONTAGE COMMERCIAL DOUBLE SWING GATE
2. SUBMIT SHOP DRAWINGS TO BE APPROVED BY LANDSCAPE ARCHITECT
3. INSTALL PER MANUFACTURER'S SPECIFICATIONS

5 7`[H] X 16`[W] DOUBLE SWING GATE - TUBULAR STEEL

1/2" = 1'-0"

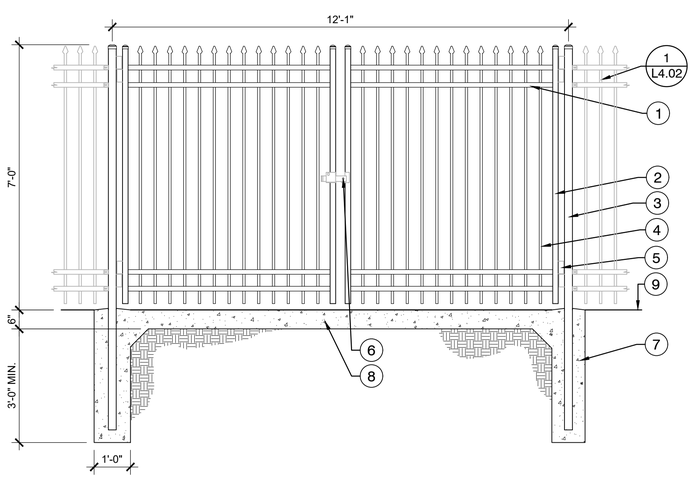

KEY:

1. 1-5/8" MONTAGE PLUS RAIL
2. GATE UPRIGHT; 1-3/8" X 14 GAUGE
3. POST; 4" X 12 GAUGE
4. PICKET; 3/4" X 14 GAUGE
5. WELD ON BOX HINGE
6. GATE LATCH
7. CONCRETE FOOTING, TYP.; SLOPE CONC. AWAY FROM POST AT GRADE
8. 6" [D] X 12" [W] CONCRETE MOW STRIP; TO SPAN LENGTH OF GATE
9. FINISH GRADE

NOTES:
1. AMERISTAR MONTAGE COMMERCIAL DOUBLE SWING GATE
2. SUBMIT SHOP DRAWINGS TO BE APPROVED BY LANDSCAPE ARCHITECT
3. INSTALL PER MANUFACTURER'S SPECIFICATIONS

4 7`[H] X 12`[W] DOUBLE SWING GATE - TUBULAR STEEL

1/2" = 1'-0"

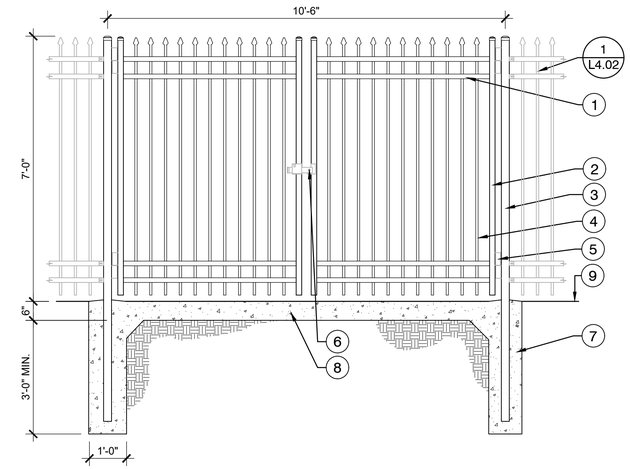

KEY:

1. 1-5/8" MONTAGE PLUS RAIL
2. GATE UPRIGHT; 1-3/8" X 14 GAUGE
3. POST; 4" X 12 GAUGE
4. PICKET; 3/4" X 14 GAUGE
5. WELD ON BOX HINGE
6. GATE LATCH
7. CONCRETE FOOTING, TYP.; SLOPE CONC. AWAY FROM POST AT GRADE
8. 6" [D] X 12" [W] CONCRETE MOW STRIP; TO SPAN LENGTH OF GATE
9. FINISH GRADE

NOTES:
1. AMERISTAR MONTAGE COMMERCIAL DOUBLE SWING GATE
2. SUBMIT SHOP DRAWINGS TO BE APPROVED BY LANDSCAPE ARCHITECT
3. INSTALL PER MANUFACTURER'S SPECIFICATIONS

3 7`[H] X 10`[W] DOUBLE SWING GATE - TUBULAR STEEL

1/2" = 1'-0"

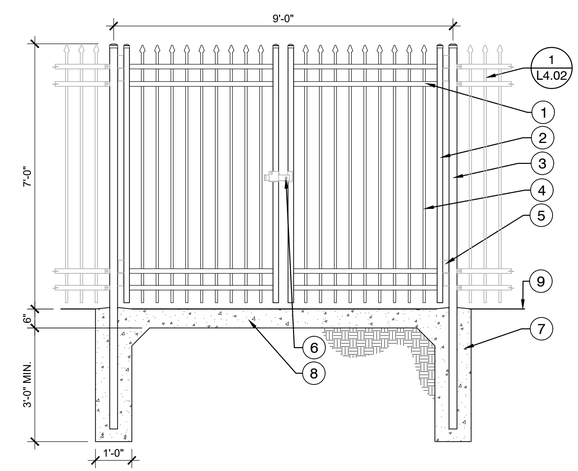

KEY:

1. 1-5/8" MONTAGE PLUS RAIL
2. GATE UPRIGHT; 1-3/8" X 14 GAUGE
3. POST; 4" X 12 GAUGE
4. PICKET; 3/4" X 14 GAUGE
5. WELD ON BOX HINGE
6. GATE LATCH
7. CONCRETE FOOTING, TYP.; SLOPE CONC. AWAY FROM POST AT GRADE
8. 6" [D] X 12" [W] CONCRETE MOW STRIP; TO SPAN LENGTH OF GATE
9. FINISH GRADE

NOTES:
1. AMERISTAR MONTAGE COMMERCIAL DOUBLE SWING GATE
2. SUBMIT SHOP DRAWINGS TO BE APPROVED BY LANDSCAPE ARCHITECT
3. INSTALL PER MANUFACTURER'S SPECIFICATIONS

2 7`[H] X 8`[W] DOUBLE SWING GATE - TUBULAR STEEL

1/2" = 1'-0"

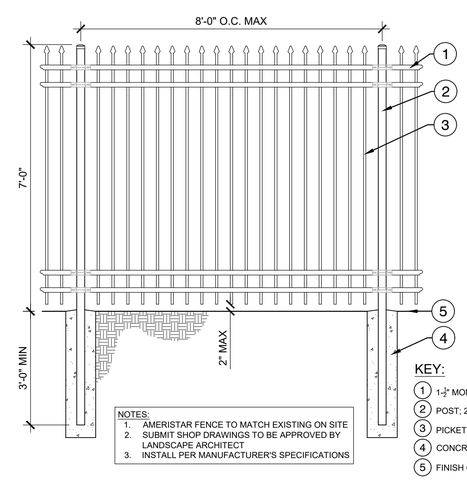

NOTES:
1. AMERISTAR FENCE TO MATCH EXISTING ON SITE
2. SUBMIT SHOP DRAWINGS TO BE APPROVED BY LANDSCAPE ARCHITECT
3. INSTALL PER MANUFACTURER'S SPECIFICATIONS

KEY:

1. 1-5/8" MONTAGE PLUS RAIL
2. POST; 2-1/2" X 14 GAUGE
3. PICKET; 3/4" X 14 GAUGE
4. CONCRETE FOOTING, TYP.
5. FINISH GRADE

1 7`[H] TUBULAR STEEL FENCE

1/2" = 1'-0"

CITY OF McALLEN
SOFTBALL FIELD FACILITIES
MUNICIPAL PARK
McALLEN, TEXAS

McALLEN Parks & Recreation

HALFF
5000 WEST MILITARY HWY, SUITE 100
McALLEN, TX 78503
TEL (956) 682-0286
FAX (956) 684-0282
TBPE FIRM #F-312

Revision		
No.	Date	Description

REGISTERED LANDSCAPE ARCHITECT
TIMOTHY W. MAY
1221
STATE OF TEXAS
07/11/2018

100% CONSTRUCTION DOCUMENTS

Project No.:	33348.001
Issued:	07/11/2018
Drawn By:	CE
Checked By:	TM
Scale:	AS SHOWN
Sheet Title	SITE DETAILS
Sheet Number	L4.02

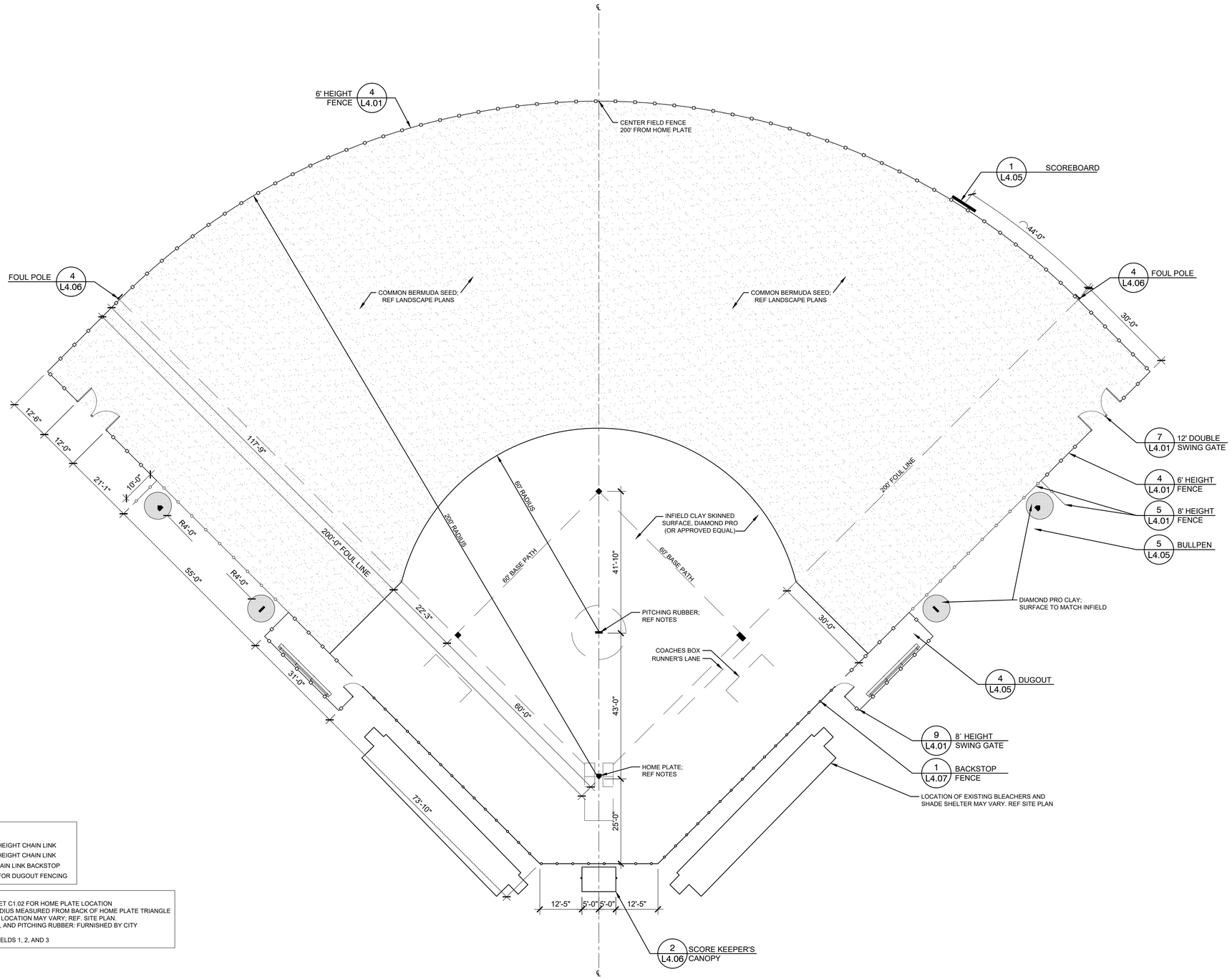

FENCE LEGEND

- 6' HEIGHT CHAIN LINK
- 8' HEIGHT CHAIN LINK
- CHAIN LINK BACKSTOP

REFER TO DETAIL 4/L4.05 FOR DUGOUT FENCING

NOTES:
1. REFER TO CIVIL SHEET C1.02 FOR HOME PLATE LOCATION
2. OUTFIELD FENCE RADIUS MEASURED FROM BACK OF HOME PLATE TRIANGLE
3. MAINTENANCE GATE LOCATION MAY VARY; REF. SITE PLAN.
4. BASES, HOME PLATE, AND PITCHING RUBBER: FURNISHED BY CITY

ALTERNATE NO. 4:
NEW SCOREBOARD FOR FIELDS 1, 2, AND 3

1 SOFTBALL FIELD LAYOUT - FIELDS 1, 2, & 3

1/16" = 1'-0"

CITY OF McALLEN
SOFTBALL FIELD FACILITIES
MUNICIPAL PARK
McALLEN, TEXAS

McALLEN Parks & Recreation

HALFF
5000 WEST MILITARY HWY, SUITE 100
McALLEN, TX 78503
TEL (956) 664-0099
FAX (956) 684-0282
TBPE FIRM #F-312

Revision		
No.	Date	Description

REGISTERED LANDSCAPE ARCHITECT
TIMOTHY W. MAY
1221
STATE OF TEXAS
07/11/2018

100% CONSTRUCTION DOCUMENTS

Project No.:	33348.001
Issued:	07/11/2018
Drawn By:	CE
Checked By:	TM
Scale:	AS SHOWN
Sheet Title	
SITE DETAILS	

L4.03
Sheet Number

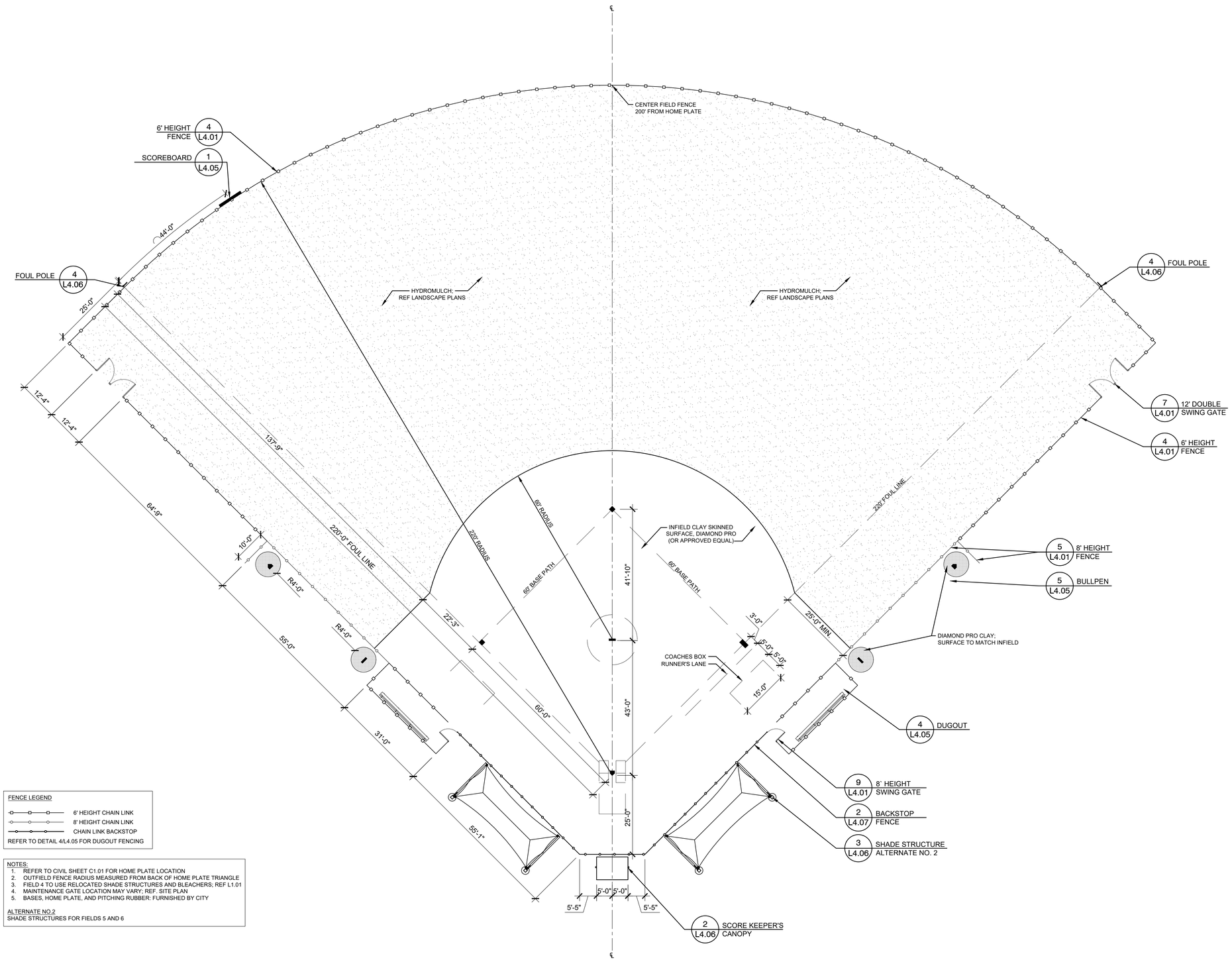

FENCE LEGEND

- 6' HEIGHT CHAIN LINK
- 8' HEIGHT CHAIN LINK
- CHAIN LINK BACKSTOP

REFER TO DETAIL 4/L4.05 FOR DUGOUT FENCING

NOTES:
1. REFER TO CIVIL SHEET C1.01 FOR HOME PLATE LOCATION
2. OUTFIELD FENCE RADIUS MEASURED FROM BACK OF HOME PLATE TRIANGLE
3. FIELD 4 TO USE RELOCATED SHADE STRUCTURES AND BLEACHERS; REF L1.01
4. MAINTENANCE GATE LOCATION MAY VARY; REF. SITE PLAN
5. BASES, HOME PLATE, AND PITCHING RUBBER: FURNISHED BY CITY

ALTERNATE NO.2
SHADE STRUCTURES FOR FIELDS 5 AND 6

1 SOFTBALL FIELD LAYOUT - FIELDS 4, 5, & 6

1/16" = 1'-0"

CITY OF McALLEN
SOFTBALL FIELD FACILITIES
MUNICIPAL PARK
McALLEN, TEXAS

HALFF
5000 WEST MILITARY HWY, SUITE 100
McALLEN, TX 78503
TEL (956) 682-0286
FAX (956) 684-0282
TBPE FIRM #F-312

Revision		
No.	Date	Description

REGISTERED LANDSCAPE ARCHITECT
TIMOTHY W. M
1221
STATE OF TEXAS
07/11/2018

100% CONSTRUCTION DOCUMENTS

Project No.:	33348.001
Issued:	07/11/2018
Drawn By:	CE
Checked By:	TM
Scale:	AS SHOWN

Sheet Title

SITE DETAILS

L4.04

Sheet Number

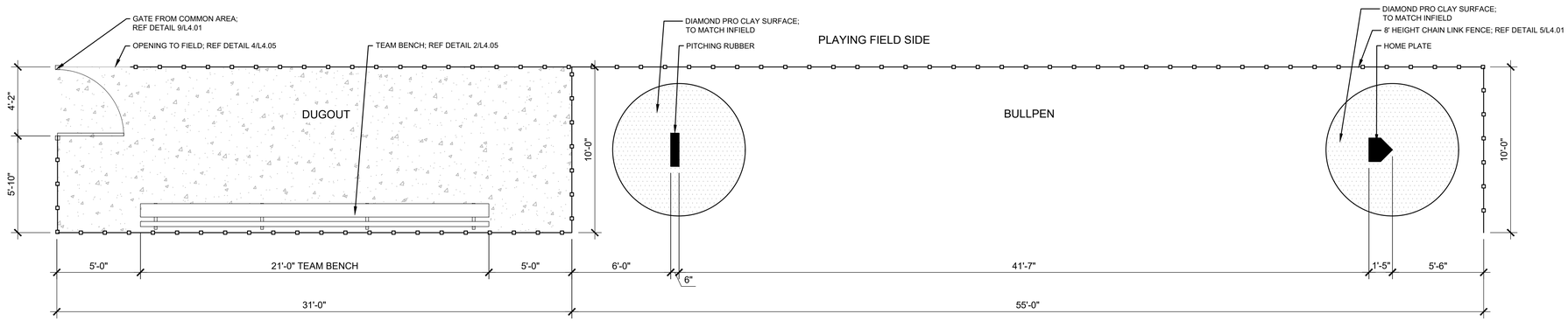

5 DUGOUT AND BULLPEN LAYOUT

1/4" = 1'-0"

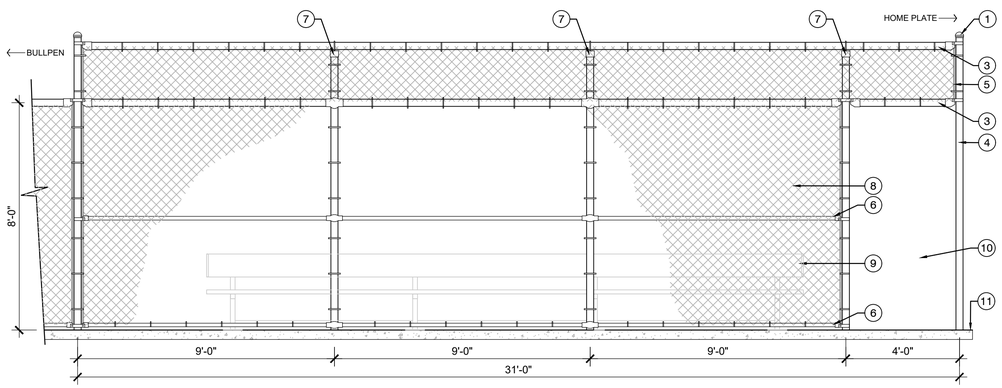

FRONT ELEVATION

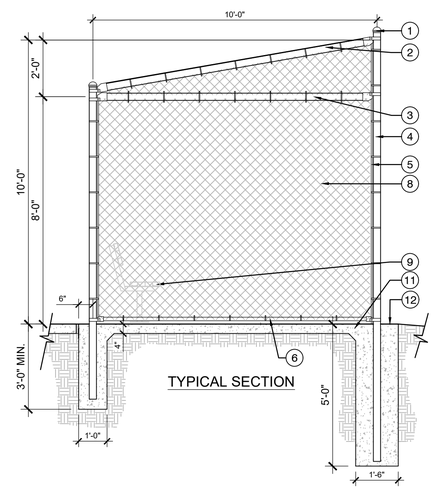

TYPICAL SECTION

KEY:

1. POST CAP
2. CORRUGATED METAL ROOF; COLOR: BLUE
3. 3" Ø STEEL POST, HORIZONTAL BEAM
4. 3" Ø STEEL POST
5. TENSION BAR
6. 1-½" HORIZONTAL RAIL
7. LINE POST W/ LOOP CAP
8. 2" DIAMOND MESH CHAIN LINK FABRIC; KNUCKLE SELVAGE
9. TEAM BENCH; REF DETAIL 2/L4.05
10. 4' [W] X 8' [H] OPENING TO FIELD
11. CONCRETE WALK; REF. CIVIL
12. FINISH GRADE

4 DUGOUT

3/8" = 1'-0"

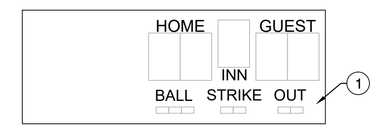

FRONT ELEVATION

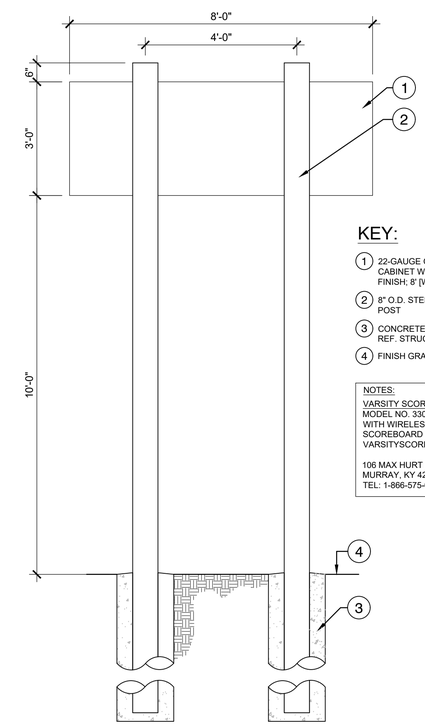

REAR ELEVATION/SECTION

KEY:

1. 22-GAUGE GALVANNEAL STEEL CABINET WITH POWDER COAT FINISH; 8' [W] X 3' [H] X 8" [D]
2. 8" O.D. STEEL, SCHEDULE 40 POST
3. CONCRETE FOOTING; REF. STRUCTURAL
4. FINISH GRADE

NOTES:
VARSITY SCOREBOARDS
MODEL NO. 3306,
WITH WIRELESS REMOTE,
SCOREBOARD COLOR: GREEN
VARSITYSCOREBOARDS.COM

106 MAX HURT DRIVE
MURRAY, KY 42071
TEL: 1-866-575-0577

1 SCOREBOARD

1/2" = 1'-0"

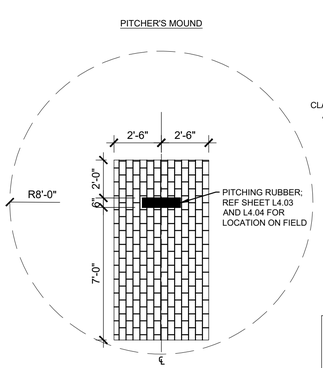

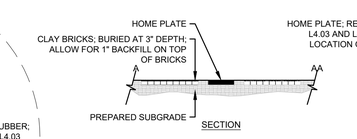

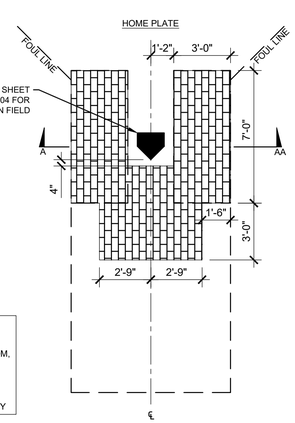

NOTES:
1. DIAMOND PRO COMPRESSED CLAY BRICKS; DIAMONDPRO.COM; OR APPROVED EQUAL
2. CONTACT: DAN JENNINGS, EMAIL: DJENNINGS@DIAMONDPRO.COM, TEL: (817) 635-8551
3. INSTALL PER MANUFACTURERS SPECIFICATIONS
4. REFER TO SHEET L4.03 AND L4.04 FOR PITCHER'S MOUND AND BATTER'S BOX LOCATION ON FIELD
5. BASES, HOME PLATE, AND PITCHING RUBBER: FURNISHED BY CITY

3 CLAY BRICK PLACEMENT

1/4" = 1'-0"

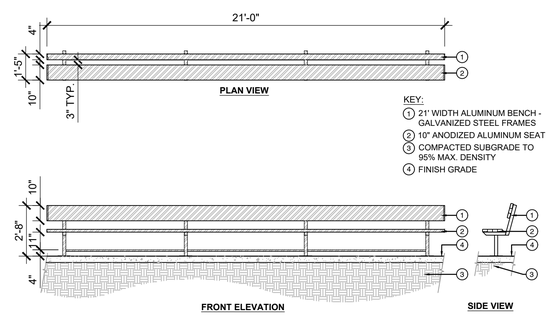

KEY:

1. 21' WIDTH ALUMINUM BENCH - GALVANIZED STEEL FRAMES
2. 10" ANODIZED ALUMINUM SEAT
3. COMPACTED SUBGRADE TO 95% MAX. DENSITY
4. FINISH GRADE

NOTES:
1. STURDISTEEL 21' TEAM BENCH WITH BACKREST, SURFACE MOUNTED; MODEL NO. D201-00-021, OR APPROVED EQUAL
2. STURDIBLEACHERS.COM, TEL: 1-800-433-3116

2 TEAM BENCH

1/4" = 1'-0"

CITY OF McALLEN
SOFTBALL FIELD FACILITIES
MUNICIPAL PARK
McALLEN, TEXAS

McALLEN Parks & Recreation

HALFF
5000 WEST MILITARY HWY, SUITE 100
McALLEN, TX 78503
TEL: (956) 682-0286
FAX: (956) 684-0282
TBPE FIRM #F-312

Revision		
No.	Date	Description

REGISTERED LANDSCAPE ARCHITECT
TIMOTHY W. MAY
1221
STATE OF TEXAS
07/11/2018

100% CONSTRUCTION DOCUMENTS

Project No.:	33348.001
Issued:	07/11/2018
Drawn By:	CE
Checked By:	TM
Scale:	AS SHOWN
Sheet Title	SITE DETAILS
Sheet Number	L4.05

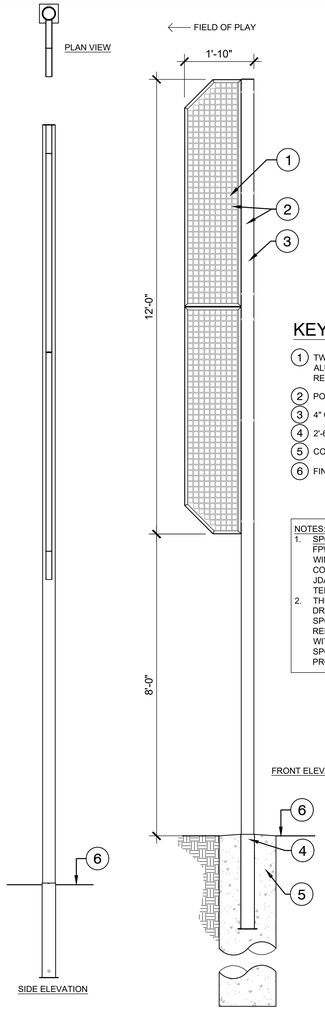

KEY:

1. TWO 6' WINGS: 1/8" STAMPED ALUMINUM WITH DOUBLE REINFORCED BENDS
2. POWDER COATED YELLOW FINISH
3. 4" O.D. ALUMINUM POLE
4. 2'-6" GROUND SLEEVE
5. CONCRETE FOOTING; REF. STRUCTURAL
6. FINISH GRADE

NOTES:
1. SPORTSFIELD SPECIALTIES MODEL NO. FPW420 (LGFPW420) 20' FOUL POLE WITH WING; SPORTSFIELDSPECIALTIES.COM, CONTACT: JJ DARLING, EMAIL: JDARLING@SPORTSFIELDSPECIALTIES.COM, TEL: (210) 241-8196
2. THE INFORMATION CONTAINED IN THIS DRAWING IS THE SOLE PROPERTY OF SPORTSFIELD SPECIALTIES INC. ANY REPRODUCTION IN PART OR AS A WHOLE WITHOUT THE WRITTEN PERMISSION OF SPORTSFIELD SPECIALTIES INC. IS PROHIBITED.

4 FOUL POLE

1/2" = 1'-0"

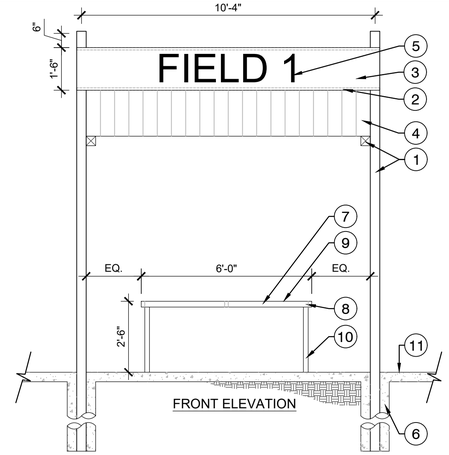

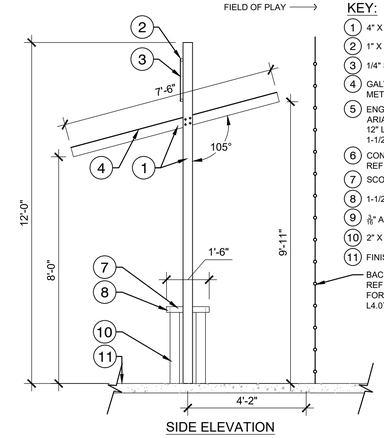

KEY:

1. 4" X 4" SQUARE STEEL TUBE
2. 1" X 1" SQUARE STEEL TUBE
3. 1/4" STEEL PLATE
4. GALVANIZED CORRUGATED METAL ROOF
5. ENGRAVED FIELD NUMBER; ARIAL FONT 12" LETTER HEIGHT, 1-1/2" LETTER SPACING
6. CONCRETE FOOTING, TYP.; REF STRUCTURAL
7. SCORER'S TABLE
8. 1-1/2" X 2-1/2" ALUMINUM TUBE FRAME
9. 3/16" ALUMINUM PLATE COUNTER
10. 2" X 4" ALUMINUM TUBE
11. FINISH CONCRETE; REF CIVIL

BACKSTOP FENCE; REF SHEETS L4.03 AND L4.04 FOR LOCATION; REF SHEET L4.07 FOR DETAIL

2 SCORE KEEPER`S CANOPY

3/8" = 1'-0"

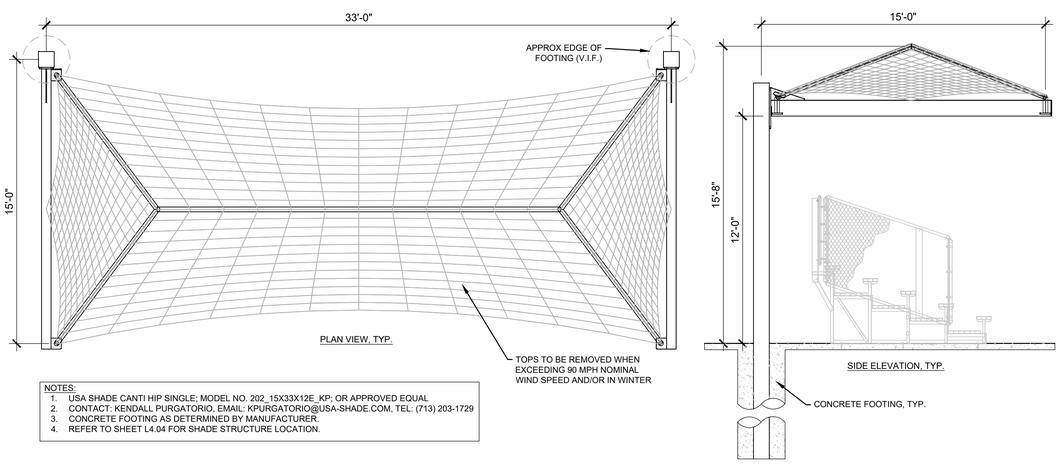

NOTES:
1. USA SHADE CANTI HIP SINGLE; MODEL NO. 202_15X33X12E_KP; OR APPROVED EQUAL
2. CONTACT: KENDALL PURGATORIO, EMAIL: KPURGATORIO@USA-SHADE.COM, TEL: (713) 203-1729
3. CONCRETE FOOTING AS DETERMINED BY MANUFACTURER.
4. REFER TO SHEET L4.04 FOR SHADE STRUCTURE LOCATION.

3 SHADE STRUCTURE

1/4" = 1'-0"

ALTERNATE NO.2

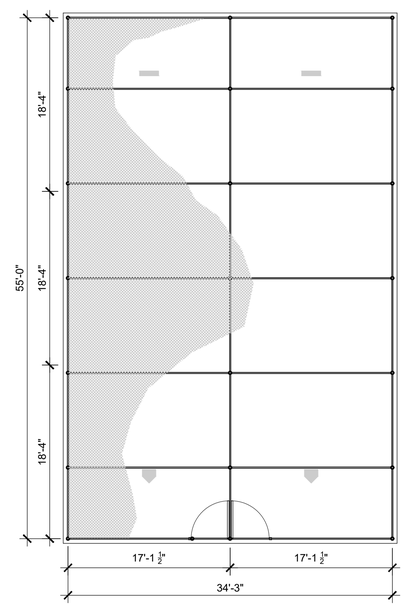

KEY:

1. 3" O.D. TERMINAL POST
2. POST CAP
3. TOP RAIL
4. TENSION BAR
5. BRACE BAND
6. TENSION BAN 15" O.C.
7. RAIL END CUP
8. LINE POST W/ LOOP CAP
9. FABRIC TIE
10. CHAIN LINK FABRIC W/ KNUCKLE SELVAGE
11. BOTTOM RAIL
12. CONCRETE FOOTING, TYP; REF STRUCTURAL
13. FINISH GRADE

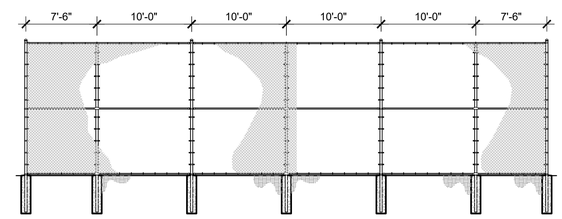

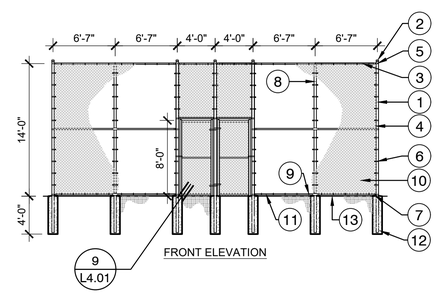

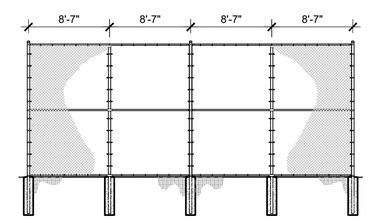

1 BATTING TUNNEL

1/8" = 1'-0"

CITY OF McALLEN
SOFTBALL FIELD FACILITIES
MUNICIPAL PARK
McALLEN, TEXAS

McALLEN Parks & Recreation

HALFF
5000 WEST MILITARY HWY, SUITE 100
McALLEN, TX 78503
TEL (956) 664-0286
FAX (956) 664-0282
TBPE FIRM #F-312

Revision		
No.	Date	Description

REGISTERED LANDSCAPE ARCHITECT
TIMOTHY W. M.
1221
STATE OF TEXAS
07/11/2018

100% CONSTRUCTION DOCUMENTS

Project No.:	33348.001
Issued:	07/11/2018
Drawn By:	CE
Checked By:	TM
Scale:	AS SHOWN

Sheet Title

SITE DETAILS

L4.06

Sheet Number

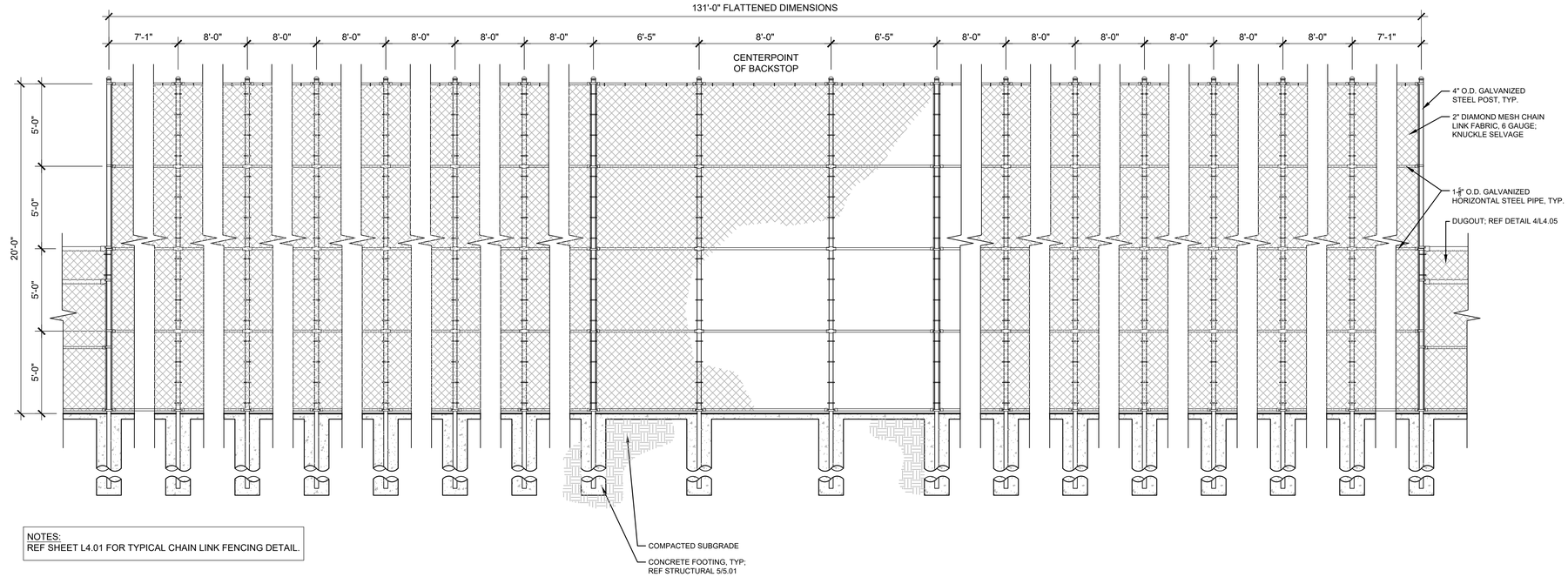

NOTES:
REF SHEET L4.01 FOR TYPICAL CHAIN LINK FENCING DETAIL.

2 BACKSTOP FENCING - FIELDS 4, 5, & 6

1/4" = 1'-0"

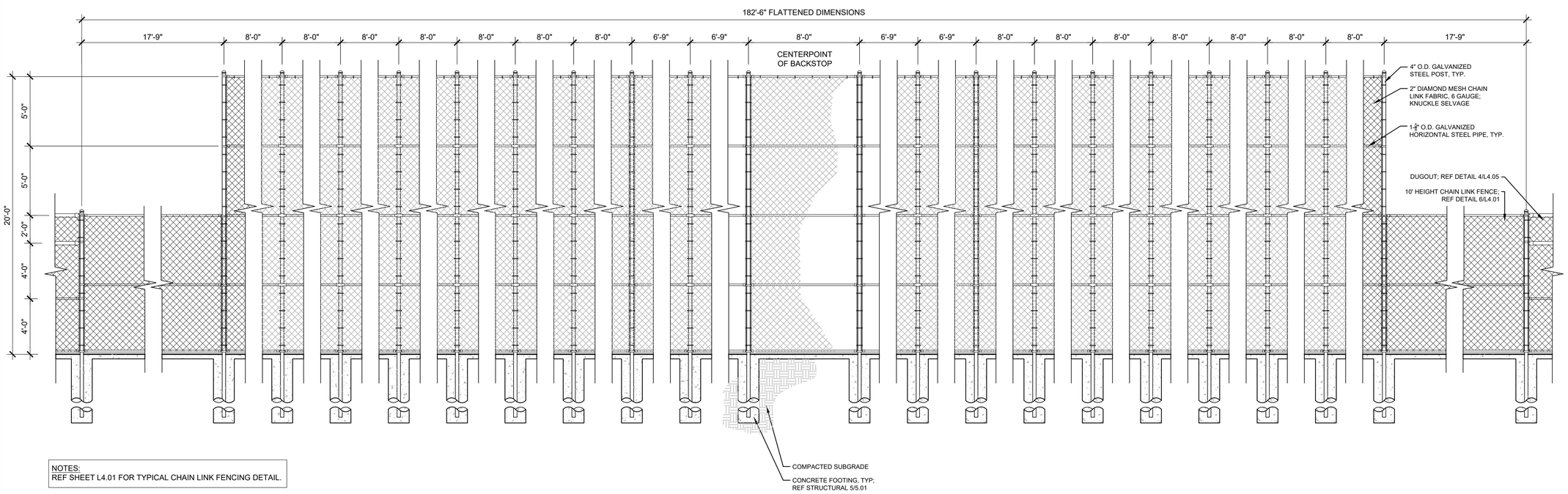

NOTES:
REF SHEET L4.01 FOR TYPICAL CHAIN LINK FENCING DETAIL.

1 BACKSTOP FENCING - FIELDS 1, 2, & 3

1/4" = 1'-0"

CITY OF McALLEN
SOFTBALL FIELD FACILITIES
MUNICIPAL PARK
McALLEN, TEXAS

McALLEN Parks & Recreation

HALFF
5000 WEST MILITARY HWY, SUITE 100
McALLEN, TX 78503
TEL (956) 682-0286
FAX (956) 684-0282
TBPE FIRM #F-312

Revision No.	Date	Description

REGISTERED LANDSCAPE ARCHITECT
TIMOTHY W. MUNSON
1221
STATE OF TEXAS
07/11/2018

100%
CONSTRUCTION
DOCUMENTS

Project No.:	33348.001
Issued:	07/11/2018
Drawn By:	CE
Checked By:	TM
Scale:	AS SHOWN

Sheet Title
SITE DETAILS

L4.07
Sheet Number

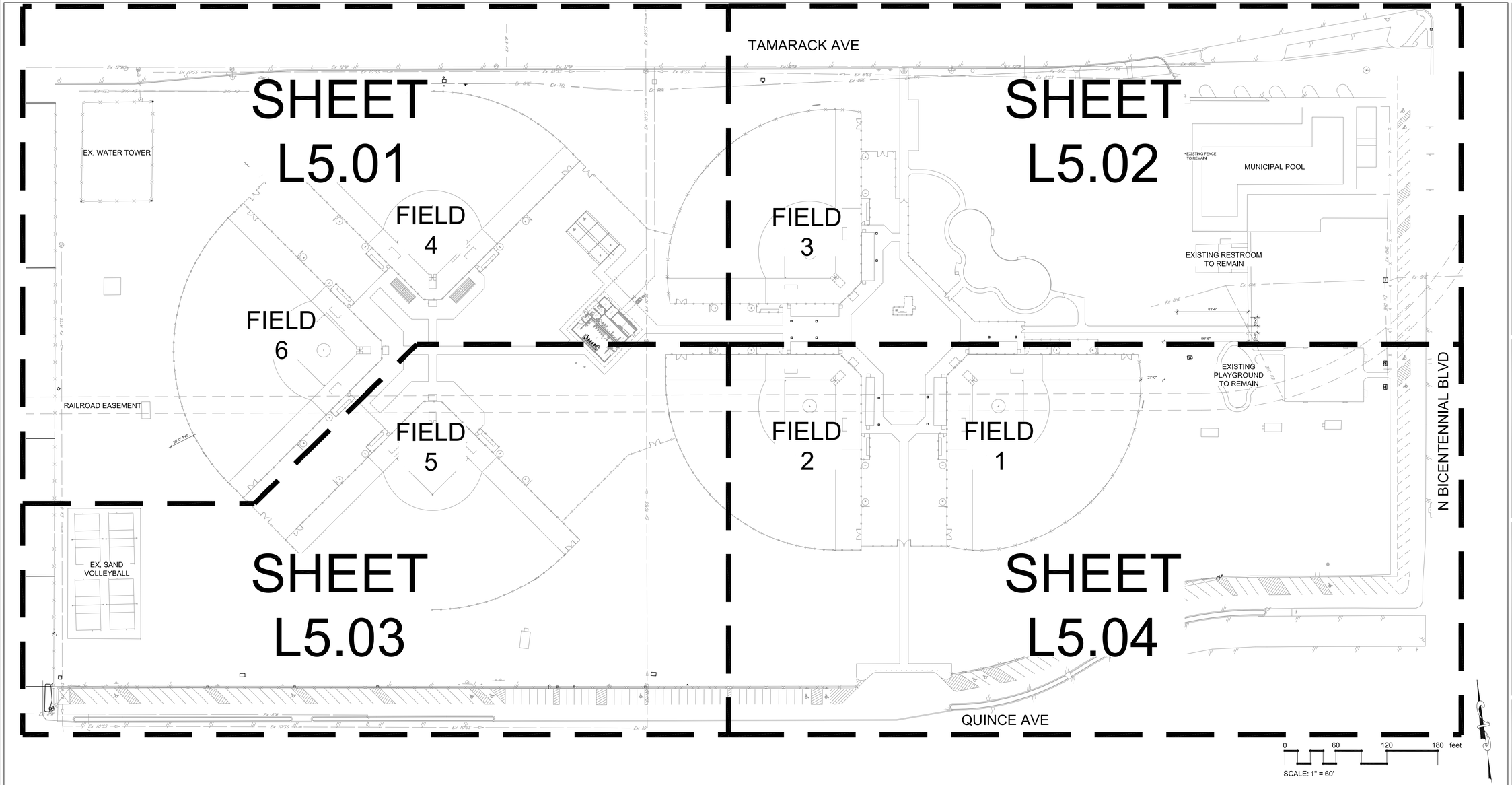

PLANTING NOTES

1. EXISTING CONDITIONS: THE LANDSCAPE CONTRACTOR SHALL BE RESPONSIBLE FOR VISITING THE SITE PRIOR TO SUBMITTING BID PROPOSAL, TO BECOME FAMILIAR WITH ALL CONDITIONS AFFECTING THE PROPOSED WORK. THE LANDSCAPE CONTRACTOR SHALL IDENTIFY AND REVIEW ALL UNDERGROUND UTILITY LOCATIONS PRIOR TO COMMENCING WORK AND SHALL EXERCISE EXTREME CAUTION WHEN WORKING CLOSE TO UTILITIES, AND SHALL NOTIFY THE OWNER'S REPRESENTATIVE OF APPARENT CONFLICTS WITH CONSTRUCTION AND UTILITIES SO THAT ADJUSTMENTS CAN BE PLANNED PRIOR TO INSTALLATION. CONTACT THE LOCAL UNDERGROUND UTILITY SERVICES FOR UTILITY LOCATION AND IDENTIFICATION. THE LANDSCAPE CONTRACTOR BEARS FULL RESPONSIBILITY FOR THIS WORK AND DISRUPTION OR DAMAGE TO UTILITIES SHALL BE REPAIRED IMMEDIATELY AT NO EXPENSE TO THE OWNER.

2. ALL SITE FEATURES INCLUDING LIGHTS AND OTHER UTILITIES, ABOVE AND BELOW GRADE,TO BE VERIFIED ON SITE PRIOR TO PLANTING AND IRRIGATION INSTALLATION. NOTIFY OWNER'S REPRESENTATIVE TO MAKE ADJUSTMENTS PRIOR TO INSTALLATION.

3. LAYOUT AND GRADING: THE LANDSCAPE CONTRACTOR SHALL BE RESPONSIBLE FOR ACCURATELY LAYING OUT THE TURF AREAS BY SCALING THE DRAWINGS. LAYOUT SHALL BE PAINTED OR STAKED ON THE GROUND FOR REVIEW AND APPROVAL OF OWNER'S REPRESENTATIVE PRIOR TO EXCAVATION. FOLLOWING APPROVAL OF LAYOUT, CLOSELY COORDINATE THE INSTALLATION OF THE IRRIGATION SYSTEM TO CONFORM TO THE APPROVED LAYOUT.

   THE LANDSCAPE CONTRACTOR SHALL BE RESPONSIBLE FOR FINE GRADING OF THE TURF AREAS. THE LANDSCAPE CONTRACTOR AND OWNER SHALL REVIEW THE EXTENT OF GRADING OF AREA PRIOR TO COMMENCING WORK. ENTIRE SITE SHALL BE GRADED TO FINISH GRADE PRIOR TO SCHEDULING PLANTING INSTALLATION.

   TURF AREAS SHALL BE RAKED SMOOTH, REMOVING AND DISPOSING OF STONES OVER 1" DIAMETER AND STICKS, ROOTS, AND OTHER EXTRANEOUS MATTER AND LEGALLY DISPOSING OF THEM OFF OWNER'S PROPERTY. ALL AREAS SHALL BE FINE GRADED TO ACHIEVE POSITIVE DRAINAGE WITHOUT PUDDLES OR STANDING WATER AND FEATHER INTO NATURAL GRADE. ROLL AND RAKE, REMOVE RIDGES, AND FILL DEPRESSIONS TO MEET FINISH GRADES TO WITHIN PLUS OR MINUS 1/2 INCH OF FINISH ELEVATION. LIMIT FINISH GRADING TO AREAS THAT CAN BE PLANTED IN THE IMMEDIATE FUTURE.

   LANDSCAPE CONTRACTOR SHALL BE RESPONSIBLE FOR EROSION CONTROL OF SLOPED AREAS. CONTRACTOR TO RESTORE TURF OR PLANTING AREAS IF ERODED OR OTHERWISE DISTURBED AFTER FINISH GRADING.

4. TOPSOIL: THE LANDSCAPE CONTRACTOR SHALL BE RESPONSIBLE FOR IMPORTING AND PLACING TOPSOIL TO PREPARE THE TURF AREAS FOR THE SPECIFIED GRASS SOD AND/OR SEEDING. TURF AREAS SHALL RECEIVE A 2" LAYER OF AMENDED TOPSOIL PLACED ON TOP OF THE SUBGRADE MATERIAL. THE LANDSCAPE ARCHITECT, LANDSCAPE CONTRACTOR AND OWNER SHALL REVIEW THE EXTENT OF THIS WORK PRIOR TO COMMENCEMENT OF INSTALLATION. DO NOT SPREAD TOPSOIL IF SOIL OR SUBGRADE IS FROZEN, MUDDY OR EXCESSIVELY WET. TOPSOIL SHALL BE A MIN. OF 2% ORGANIC WITH PH BETWEEN 5.3 - 6.0.

5. FINISH GRADES OF LAWNS SHALL BE 1½" BELOW ADJACENT PAVING OR HEADER.

6. WEED CONTROL TO BE COMPLETED PRIOR TO PREPARING PLANTING AREAS BY APPLICATION OF A 50/50 BLEND OF POST-EMERGENT HUMIC ACID COMPLEX AND ROUNDUP HERBICIDE. APPLY 10 LB OF MICROLIFE HUMATES PLUS PER 1,000 SQ FT TO RESTORE SOIL HEALTH.

7. GRASS SEEDING: LIMITS OF GRASS SEEDING AREAS SHOWN ON THE DRAWINGS ARE SCHEMATIC AND NOT TO BE CONSTRUED TO BE PRECISE. THE LANDSCAPE ARCHITECT, LANDSCAPE CONTRACTOR AND OWNER SHALL REVIEW THE LIMITS OF SEEDING PRIOR TO COMMENCING INSTALLATION. IN BID PROPOSAL, FURNISH UNIT PRICES FOR GRASS SEEDING PER SQUARE YARD. THE CONTRACT AMOUNT WILL BE ADJUSTED BASED ON ACTUAL, APPROVED QUANTITIES INSTALLED.

   THE LANDSCAPE ARCHITECT, LANDSCAPE CONTRACTOR AND OWNER SHALL REVIEW THE LIMITS OF SEEDING PRIOR TO COMMENCING INSTALLATION. LANDSCAPE CONTRACTOR SHALL PROVIDE A UNIFORM STAND OF GRASS BY WATERING AND MAINTAINING SEEDED AREAS UNTIL DATE OF SUBSTANTIAL COMPLETION. RESEED AREAS, WITH SPECIFIED MATERIALS, WHICH FAIL TO PROVIDE A UNIFORM STAND UNTIL OWNER'S REPRESENTATIVE REVIEWS ALL AFFECTED AREAS. REPLACE IMMEDIATELY UNLESS REQUIRED TO SEED IN THE SUCCEEDING PLANTING SEASON. RESTRICT TRAFFIC FROM SEEDED AREAS UNTIL ESTABLISHED. ERECT SIGNS, FLAGGING AND BARRIERS AS REQUIRED. SOW GRASS SEED WHEN SOIL TEMPERATURE IS ABOVE 65 DEGREES F (IN EARLY SPRING THROUGH LATE SUMMER).

8. PROVIDE UNIT PRICES FOR ALL PLANT MATERIALS. UNIT PRICE IS TO INCLUDE COST OF MATERIAL, LABOR AND TAXES AS REQUIRED TO INSTALL THE PLANTS. UNIT PRICES SHALL BE USED IN THE CASE THAT FEWER OR MORE PLANTS ARE TO BE PLANTED.

9. REGULAR CLEAN UP AT THE JOB SITE AND ACCESS ROUTES SHALL TAKE PLACE ON A DAILY BASIS UNLESS OTHERWISE APPROVED OR REQUIRED BY THE OWNER'S REPRESENTATIVE. DEMOLITION AND INSTALLATION SCHEDULING IS TO BE COORDINATED WITH OWNER'S REPRESENTATIVE. DAILY AND ANY BARRIERS/PROTECTIVE DEVICES ARE TO BE INSTALLED AS NEEDED TO PROTECT THE SAFETY OF THE PUBLIC. SPECIAL CARE SHALL BE TAKEN TO KEEP ALL VEHICULAR ROUTES OPEN AND PEDESTRIAN ACCESS UNOBSTRUCTED FOR SAFE PASSAGE DURING DEMOLITION AND CONSTRUCTION.

10. CONTRACTOR TO PROVIDE A NINETY-DAY MAINTENANCE AGREEMENT FOR ALL WORK PERFORMED.

11. WARRANTY: CONTRACTOR TO PROVIDE IN WRITING TO OWNER A GUARANTEE FOR ALL PLANT MATERIAL PROVIDED. PROVIDE A ONE-YEAR REPLACEMENT WARRANTY FOR ALL PLANT MATERIALS. WARRANTY SHALL COVER PLANTS WHICH HAVE DIED OR PARTIALLY DIED (THEREBY RUINING THEIR NATURAL SHAPE), BUT SHALL NOT INCLUDE DAMAGE BY VANDALISM, BROWSING, HAIL, ABNORMAL FREEZES, DROUGHT OR NEGLIGENCE BY THE OWNER. THE WARRANTY IS INTENDED TO COVER CONTRACTOR NEGLIGENCE, INFESTATIONS, DISEASE AND DAMAGE OR SHOCK TO PLANTS. PLANTS REPLACED UNDER WARRANTY WILL BE WARRANTED FOR ONE YEAR FOLLOWING REPLACEMENT.

PLANT SCHEDULE OVERALL

SOD/SEED	QTY	BOTANICAL NAME / COMMON NAME
HYDRO	544,520 sf	Cynodon dactylon / Bermuda Grass
SEED	93,077 sf	Cynodon dactylon / Common Bermuda Grass

QUANTITIES SHOWN PER SHEET.

CITY OF McALLEN
SOFTBALL FIELD FACILITIES
MUNICIPAL PARK
McALLEN, TEXAS

McALLEN Parks & Recreation

HALFF
5000 WEST MILITARY HWY. SUITE 100
McALLEN TX 78503
TEL (956) 682-0285
FAX (956) 684-0282
TBPE FIRM #F-312

Revision No.	Date	Description

REGISTERED LANDSCAPE ARCHITECT
TIMOTHY W. MAY
1221
STATE OF TEXAS
07/11/2018

100% CONSTRUCTION DOCUMENTS

Project No.:	33348.001
Issued:	07/11/2018
Drawn By:	CE
Checked By:	TM
Scale:	AS SHOWN

Sheet Title
OVERALL PLANTING PLAN & NOTES

L5.00
Sheet Number

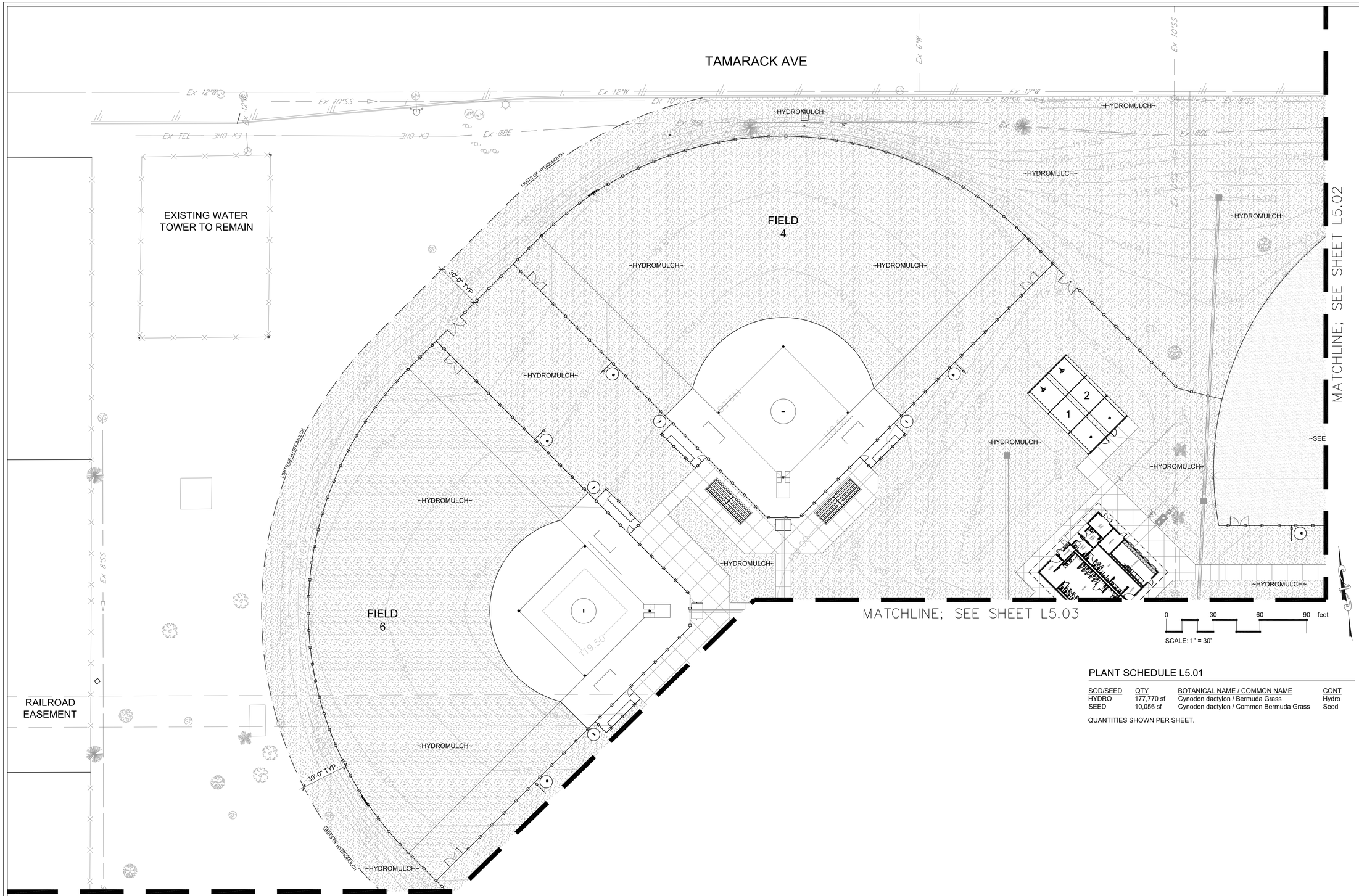

PLANT SCHEDULE L5.01

SOD/SEED	QTY	BOTANICAL NAME / COMMON NAME	CONT
HYDRO	177,770 sf	Cynodon dactylon / Bermuda Grass	Hydro
SEED	10,056 sf	Cynodon dactylon / Common Bermuda Grass	Seed

QUANTITIES SHOWN PER SHEET.

CITY OF McALLEN
SOFTBALL FIELD FACILITIES
MUNICIPAL PARK
McALLEN, TEXAS

McALLEN Parks & Recreation

HALFF
5000 WEST MILITARY HWY, SUITE 100
McALLEN TX 78503
TEL (956) 682-0286
FAX (956) 684-0282
TBPE FIRM #F-312

Revision	
No.	Date	Description

REGISTERED LANDSCAPE ARCHITECT
TIMOTHY W. MAY
1221
STATE OF TEXAS
07/11/2018

100% CONSTRUCTION DOCUMENTS

Project No.:	33348.001
Issued:	07/11/2018
Drawn By:	CE
Checked By:	TM
Scale:	AS SHOWN

Sheet Title

PLANTING PLAN

L5.01
Sheet Number

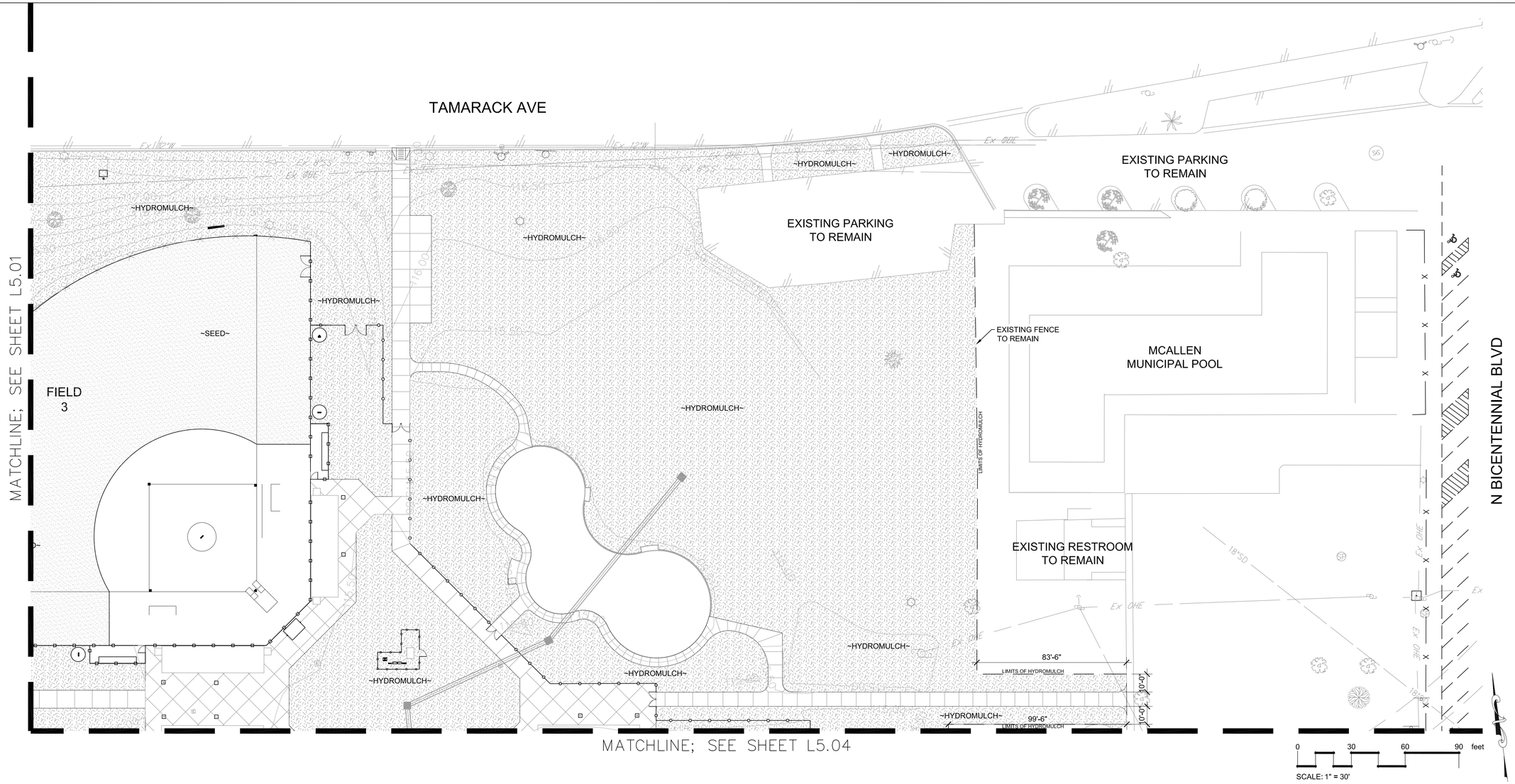

PLANT SCHEDULE L5.02

SOD/SEED	QTY	BOTANICAL NAME / COMMON NAME	CONT
HYDRO	106,270 sf	Cynodon dactylon / Bermuda Grass	Hydro
SEED	20,861 sf	Cynodon dactylon / Common Bermuda Grass	Seed

QUANTITIES SHOWN PER SHEET.

CITY OF McALLEN
SOFTBALL FIELD FACILITIES
MUNICIPAL PARK
McALLEN, TEXAS

McALLEN Parks & Recreation

HALFF
5000 WEST MILITARY HWY, SUITE 100
McALLEN TX 78503
TEL (956) 664-0286
FAX (956) 664-0282
TBPE FIRM #F-312

Revision No.	Date	Description

REGISTERED LANDSCAPE ARCHITECT
TIMOTHY W. MAY
1221
STATE OF TEXAS
07/11/2018

100% CONSTRUCTION DOCUMENTS

Project No.:	33348.001
Issued:	07/11/2018
Drawn By:	CE
Checked By:	TM
Scale:	AS SHOWN
Sheet Title	PLANTING PLAN
Sheet Number	L5.02

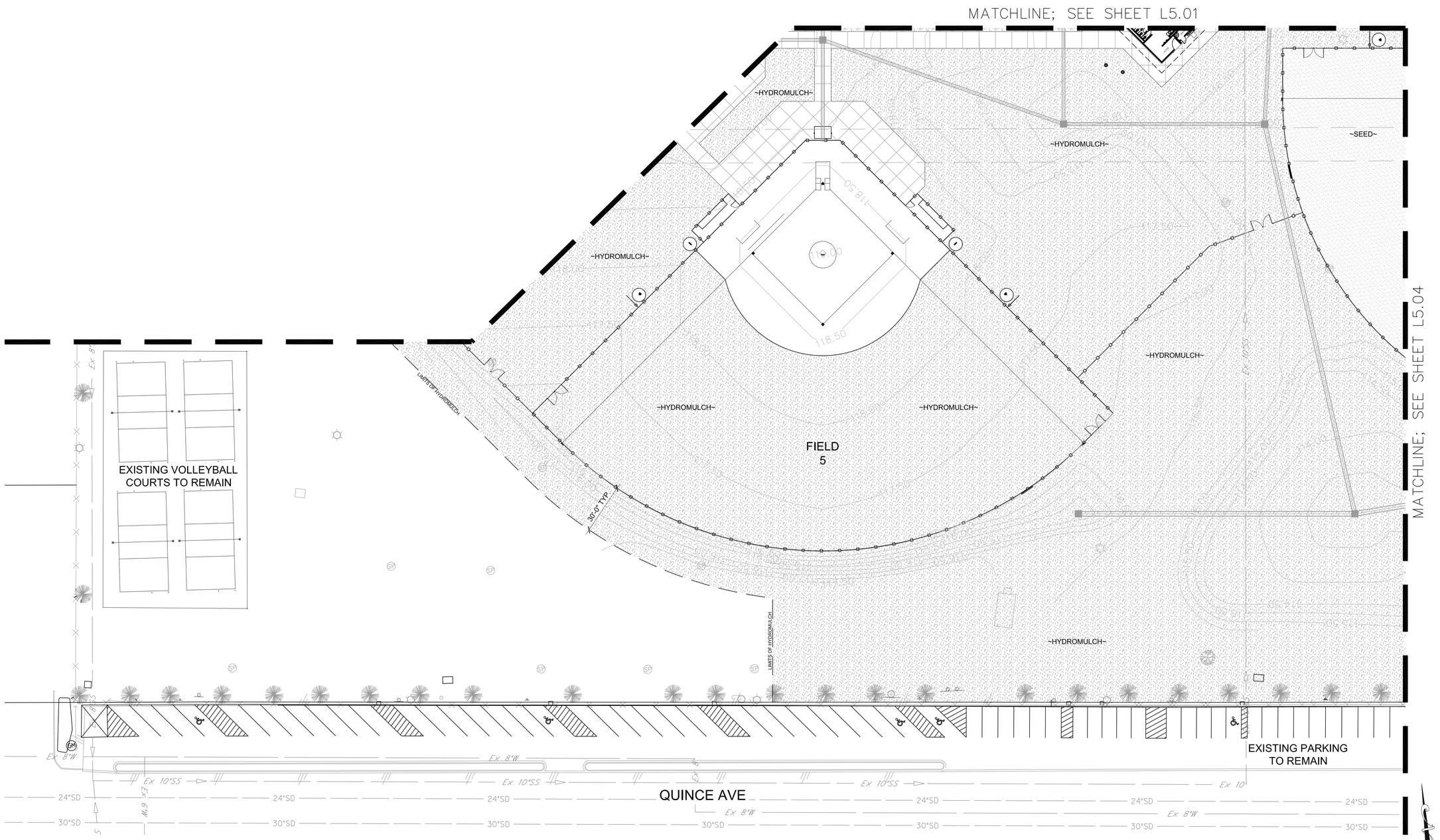

PLANT SCHEDULE L5.03

SOD/SEED	QTY	BOTANICAL NAME / COMMON NAME	CONT
HYDRO	159,959 sf	Cynodon dactylon / Bermuda Grass	Hydro
SEED	10,203 sf	Cynodon dactylon / Common Bermuda Grass	Seed

QUANTITIES SHOWN PER SHEET.

0 30 60 90 feet

SCALE: 1" = 30'

CITY OF McALLEN
SOFTBALL FIELD FACILITIES
MUNICIPAL PARK
McALLEN, TEXAS

McALLEN Parks & Recreation

HALFF
5000 WEST MILITARY HWY, SUITE 100
McALLEN, TX 78503
TEL (956) 682-0285
FAX (956) 684-0282
TBPE FIRM #F-312

Revision		
No.	Date	Description

REGISTERED LANDSCAPE ARCHITECT
TIMOTHY W. MAY
1221
STATE OF TEXAS
07/11/2018

100%
CONSTRUCTION
DOCUMENTS

Project No.:	33348.001
Issued:	07/11/2018
Drawn By:	CE
Checked By:	TM
Scale:	AS SHOWN
Sheet Title	

PLANTING PLAN

L5.03
Sheet Number

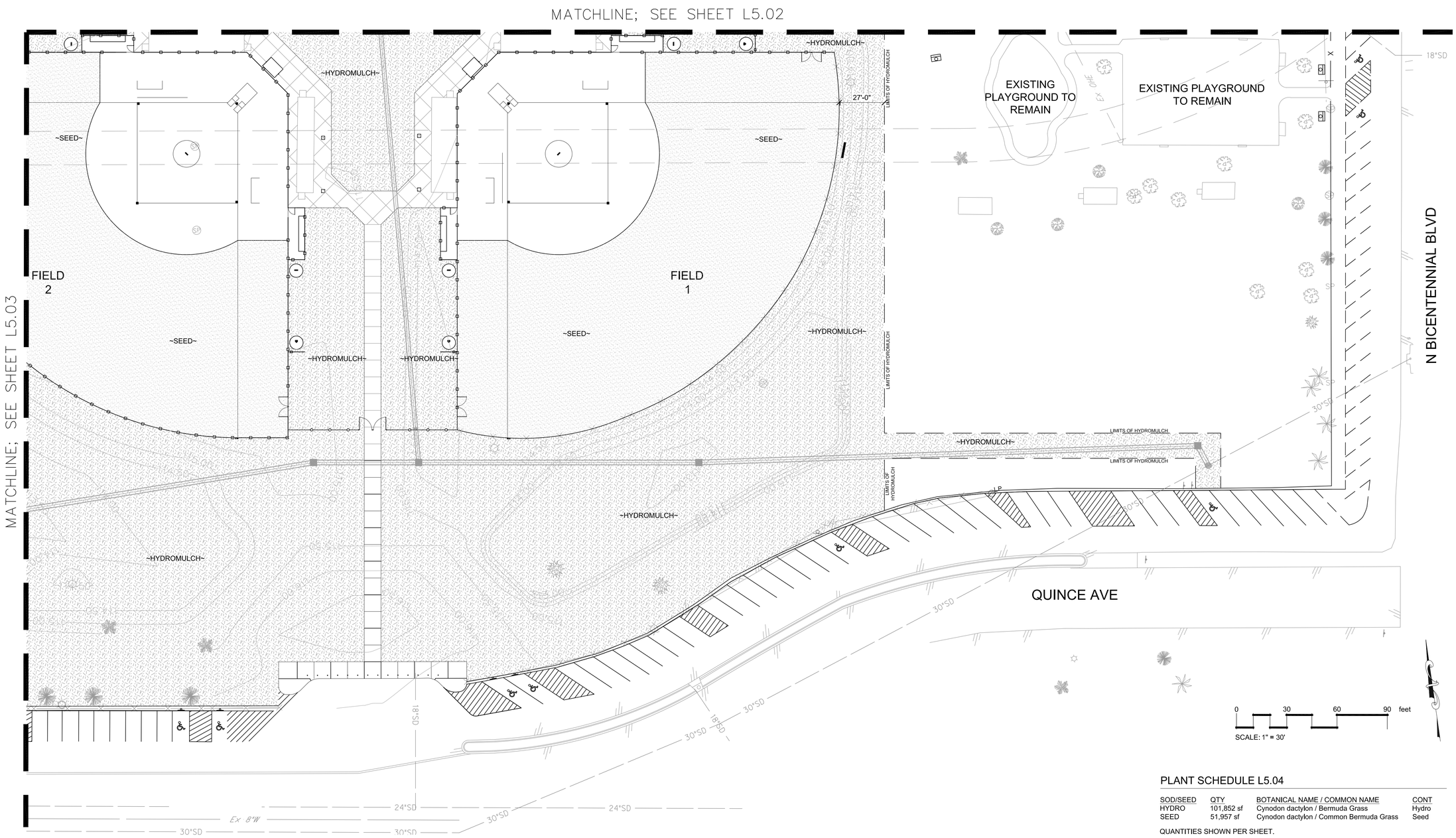

PLANT SCHEDULE L5.04

SOD/SEED	QTY	BOTANICAL NAME / COMMON NAME	CONT
HYDRO	101,852 sf	Cynodon dactylon / Bermuda Grass	Hydro
SEED	51,957 sf	Cynodon dactylon / Common Bermuda Grass	Seed

QUANTITIES SHOWN PER SHEET.

CITY OF McALLEN
SOFTBALL FIELD FACILITIES
MUNICIPAL PARK
McALLEN, TEXAS

McALLEN Parks & Recreation

HALFF
5000 WEST MILITARY HWY, SUITE 100
McALLEN, TX 78503
TEL (956) 682-0286
FAX (956) 684-0282
TBPE FIRM #F-312

Revision No.	Date	Description

REGISTERED LANDSCAPE ARCHITECT
TIMOTHY W. MAY
1221
STATE OF TEXAS
07/11/2018

100% CONSTRUCTION DOCUMENTS

Project No.:	33348.001
Issued:	07/11/2018
Drawn By:	CE
Checked By:	TM
Scale:	AS SHOWN

Sheet Title

PLANTING PLAN

L5.04

Sheet Number

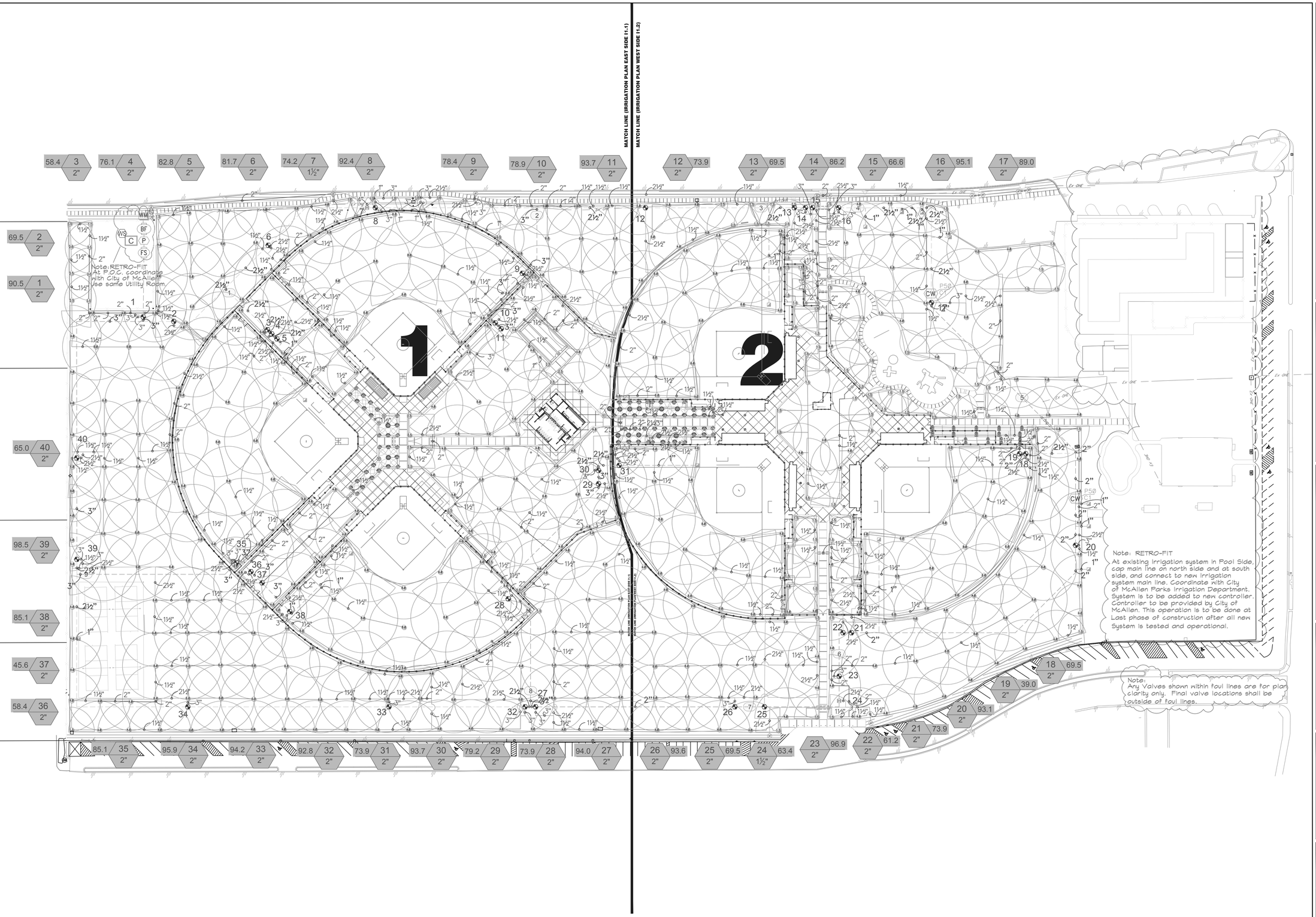

CITY OF McALLEN
SOFTBALL FIELD FACILITIES
MUNICIPAL PARK
McALLEN, TEXAS

McALLEN Parks & Recreation

HALFF
14800 ST. MARY'S LANE, SUITE 160
HOUSTON, TEXAS 77079-2943
TEL (281) 496-2400
FAX (281) 310-5259

Revision No.	Date	Description
1	04-23-2018	ADDENDUM NO. 1

STATE OF TEXAS
GERARDO GARCIA
21601
LICENSED IRRIGATOR
04/18/2018

100% CONSTRUCTION DOCUMENT

Project No.:	33348.001
Issued:	02/14/2018
Drawn By:	GG
Checked By:	GG
Scale:	1" = 60' - 0"

Sheet Title

OVERALL IRRIGATION PLAN

I1.00

Sheet Number

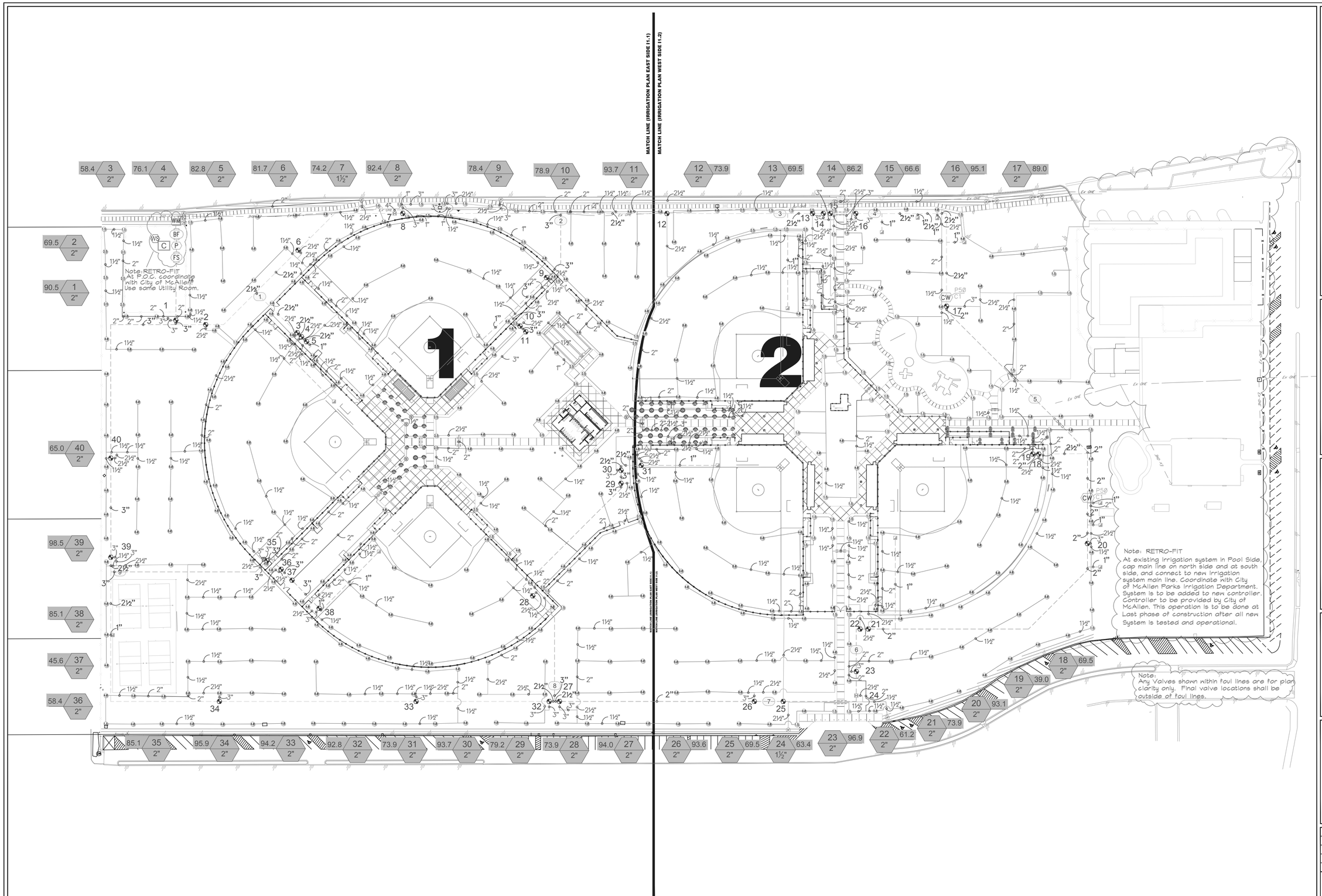

CITY OF McALLEN
SOFTBALL FIELD FACILITIES
MUNICIPAL PARK
McALLEN, TEXAS

McALLEN Parks & Recreation

HALFF
14800 ST. MARY'S LANE, SUITE 160
HOUSTON, TEXAS 77079-2943
TEL (281) 496-4400
FAX (281) 310-5259

Revision		
No.	Date	Description
1	04-23-2018	ADDENDUM NO. 1

STATE OF TEXAS
GERARDO GARCIA
21601
LICENSED IRRIGATOR
04/18/2018

100% CONSTRUCTION DOCUMENT

Project No.:	33348.001
Issued:	02/14/2018
Drawn By:	GG
Checked By:	GG
Scale:	1" = 60' - 0"

Sheet Title

OVERALL IRRIGATION PLAN
(W/O COVERAGE)

I1.00.1

Sheet Number

IRRIGATION_SCHEDULE

SYMBOL	MANUFACTURER/MODEL/DESCRIPTION	QTY	PSI	DETAIL
ES LCS RCS CS SS	Hunter PROS-06-PRS30-CV 5' strip spray Turf Spray, 30 psi regulated 6.0" Pop-Up. With factory installed Drain Check Valve. Co-molded wiper seal with UV Resistant Material.	29	40	9/15.1
12 Q T H TT TQ F	Hunter PROS-06-PRS30-CV 12' radius Turf Spray, 30 psi regulated 6.0" Pop-Up. With factory installed Drain Check Valve. Co-molded wiper seal with UV Resistant Material.	83	40	9/15.1
4 6 8 10 12 15 17	Hunter PROS-06-PRS30-CV ADJ Turf Spray, 30 psi regulated 6.0" Pop-Up. With factory installed Drain Check Valve. Co-molded wiper seal with UV Resistant Material.	4	40	9/15.1

SYMBOL	MANUFACTURER/MODEL/DESCRIPTION	QTY	PSI	GPM	RADIUS	DETAIL
1.5	Hunter I-20-06-SS Turf Rotor, 6.0" Pop-Up. Adjustable and Full Circle. Stainless Steel Riser. Drain Check Valve. Standard Nozzle.	102	55	1.80	32'	10/15.1
2.5	Hunter I-20-06-SS Turf Rotor, 6.0" Pop-Up. Adjustable and Full Circle. Stainless Steel Riser. Drain Check Valve. Standard Nozzle.	33	55	2.60	35'	10/15.1
4.0	Hunter I-20-06-SS Turf Rotor, 6.0" Pop-Up. Adjustable and Full Circle. Stainless Steel Riser. Drain Check Valve. Standard Nozzle.	235	55	4.50	41'	10/15.1
6.0	Hunter I-20-06-SS Turf Rotor, 6.0" Pop-Up. Adjustable and Full Circle. Stainless Steel Riser. Drain Check Valve. Standard Nozzle.	185	55	6.70	44'	10/15.1
8.0	Hunter I-20-06-SS Turf Rotor, 6.0" Pop-Up. Adjustable and Full Circle. Stainless Steel Riser. Drain Check Valve. Standard Nozzle.	30	55	9.00	46'	10/15.1

SYMBOL	MANUFACTURER/MODEL/DESCRIPTION	QTY	DETAIL
	Rain Bird XCZ-150-PRB-COM 1-1/2" High Flow Control Zone Kit, for Large Commercial Drip Zones. 1-1/2" PESB Valve with two 1" Pressure Regulating (40psi) Quick-Check Basket Filters. Flow range: 15-40gpm.	2	13 /15.1
	Pipe Transition Point above grade Pipe transition point from PVC lateral to drip tubing with riser to above grade installation.	12	12 /15.1
	Area to Receive Dripline Rain Bird XFS-09-18 XFS Sub-Surface Pressure Compensating Dripline w/Copper Shield Technology. 0.9 GPH emitters at 18" O.C. Laterals spaced at 24" apart, with emitters offset for triangular pattern. UV Resistant. Specify XF insert fittings.	12,206 l.f.	15 /15.1

SYMBOL	MANUFACTURER/MODEL/DESCRIPTION	QTY	DETAIL
	Hunter ICV-G-BSP 2" 1", 1-1/2", 2", and 3" Plastic Electric Remote Control Valves, Globe Configuration, with BSP Threaded Inlet/Outlet, for Commercial/Municipal Use.	38	4 /15.0
	Rain Bird 7 1-1/2" 1-1/2" Brass Quick-Coupling Valve, with Corrosion-Resistant Stainless Steel Spring, Metal Cover, and 1-Piece Body, box and isolation valve.	14	3 & 8/15.0
FS	Netafim Photo Diode Register 4" 4" Master Valve/Flow Sensor with Water Meter and Hydraulic Valve in a Single Unit. Cast Iron with Baked Powder-Coated Finish, Minimum Working Pressure 14 psi. Flange Connection, Photo Diode Register, High Frequency.	1	9 /15.0
BF	Febco 825YD 4" Reduced Pressure Backflow Preventer	1	2 /15.0
C	Controller Irrinet ACE Provide by Owner	1	6 /15.0
WS	Rain Bird WR2-RFC Wireless Rain and Freeze Sensor Combo, includes 1 receiver and 1 rain/freeze sensor transmitter.	1	5 /15.0
P	Watertronics WaterMax 5000Q - 15 HP Efficient compact pumping system, 15 horsepower. ATTENTION SPECIFIER: type in required options to add to booster pump. Flows up to 150 GPM, Pressure up to 100 PSI. For more information on available options visit Watertronics website, or call 262-367-5000	1	7 /15.0
CW PX/CX	Wire Bundle (as indicated for future use) Spare control wire bundle for future use in junction box. P=pilot wires, C=common wires bundled. Coil wires in valve box, and run continuous wire back to controller. Label each wire with a plastic I.D. tag at the wire bundle and at the controller.	2	1/15.0
1	Isolation Valve 2-1/2" PVC Double Union Ball Valve, working pressure of 125 psi with hydrostatic shell test of 200 psi and a hydrostatic seal test of 150 psi, both ends screw type. Should be housed in a valve box.	9	8/15.0
WM	Water Meter 3" provided by Owner	1	

————	Irrigation Lateral Line: PVC Class 200 SDR 21 1"	13,056 l.f.
————	Irrigation Lateral Line: PVC Class 200 SDR 21 1 1/2"	7,008 l.f.
————	Irrigation Lateral Line: PVC Class 200 SDR 21 2"	3,418 l.f.
————	Irrigation Lateral Line: PVC Class 200 SDR 21 2 1/2"	3,317 l.f.
————	Irrigation Lateral Line: PVC Class 200 SDR 21 3"	712.7 l.f.
————	Irrigation Lateral Line: PVC Class 200 SDR 21 4"	6.4 l.f.
— — — —	Irrigation Mainline: PVC Schedule 40 1"	758.2 l.f.
— — — —	Irrigation Mainline: PVC Schedule 40 2"	447.3 l.f.
— — — —	Irrigation Mainline: PVC Schedule 40 2 1/2"	2,014 l.f.
— — — —	Irrigation Mainline: PVC Schedule 40 3"	2,498 l.f.
— — — —	Irrigation Mainline: PVC Schedule 40 6"	5.7 l.f.
========	Pipe Sleeve: PVC Schedule 40 12"	206.5 l.f.

VALVE SCHEDULE

NUMBER	MODEL	SIZE	TYPE	GPM	HEADS	PIPE	WIRE	DESIGN PSI	FRICTION LOSS	VALVE LOSS	PSI	PSI @ POC	PRECIP
1	Hunter ICV-G-BSP	2"	Turf Rotor	90.50	22	804.1	118.5	55	7.79	3.25	66.04	80.47	0.48 in/h
2	Hunter ICV-G-BSP	2"	Turf Rotor	69.50	13	546.9	165.0	55	5.24	2.14	62.37	75.97	0.44 in/h
3	Hunter ICV-G-BSP	2"	Turf Rotor	58.40	12	483.5	328.6	55	6.42	1.62	63.04	77.26	1.02 in/h
4	Hunter ICV-G-BSP	2"	Turf Rotor	76.10	11	472.1	336.5	55	2.71	2.46	60.16	76.31	0.73 in/h
5	Hunter ICV-G-BSP	2"	Turf Rotor	82.80	12	584.5	346.1	55	4.60	2.82	62.41	79.56	0.74 in/h
6	Hunter ICV-G-BSP	2"	Turf Rotor	81.70	18	711.1	331.6	55	5.94	2.76	63.70	80.26	0.59 in/h
7	Rain Bird XCZ-150-PRB-COM	1-1/2"	Area for Dripline	74.20		1,202	482.8	10	2	20.70	32.70	49.75	0.48 in/h
8	Hunter ICV-G-BSP	2"	Turf Rotor	92.40	25	882.1	493.7	55	5.02	3.44	63.45	83.68	0.92 in/h
9	Hunter ICV-G-BSP	2"	Turf Rotor	78.40	11	485.4	801.8	55	2.68	2.58	60.26	80.03	0.69 in/h
10	Hunter ICV-G-BSP	2"	Turf Rotor	78.90	20	745.0	894.0	55	7.17	2.61	64.78	85	0.62 in/h
11	Hunter ICV-G-BSP	2"	Turf Rotor	93.70	24	931.2	905.0	55	7.65	3.57	66.22	90.01	1.10 in/h
12	Hunter ICV-G-BSP	2"	Turf Rotor	73.90	11	586.8	850.9	55	6.04	2.35	63.39	82.75	0.65 in/h
13	Hunter ICV-G-BSP	2"	Turf Rotor	69.50	10	487.4	1,048	55	2.75	2.14	59.89	79.06	0.71 in/h
14	Hunter ICV-G-BSP	2"	Turf Rotor	86.20	32	1,120	1,062	55	9.67	3	67.66	90.83	0.97 in/h
15	Hunter ICV-G-BSP	2"	Turf Rotor	66.60	25	1,155	1,072	55	8.12	2.01	65.13	83.75	0.65 in/h
16	Hunter ICV-G-BSP	2"	Turf Rotor	95.10	23	978.4	1,106	55	5.31	3.71	64.02	89.82	0.54 in/h
17	Hunter ICV-G-BSP	2"	Turf Rotor	89.00	29	1,120	1,354	55	7.27	3.15	65.42	90.33	0.73 in/h
18	Hunter ICV-G-BSP	2"	Turf Rotor	69.50	10	452.9	1,698	55	2.72	2.14	59.86	82.03	0.65 in/h
19	Hunter ICV-G-BSP	2"	Turf Spray	39.00	29	361.9	1,707	40	1.58	0.80	42.38	57.83	1.18 in/h
20	Hunter ICV-G-BSP	2"	Turf Rotor	93.10	22	833.1	1,754	55	7.30	3.51	65.81	95.51	0.52 in/h
21	Hunter ICV-G-BSP	2"	Turf Rotor	73.90	11	533.0	1,844	55	3.22	2.35	60.57	83.90	0.70 in/h
22	Hunter ICV-G-BSP	2"	Turf Rotor	61.20	22	720.4	1,833	55	5.90	1.76	62.65	82.39	0.88 in/h
23	Hunter ICV-G-BSP	2"	Turf Rotor	96.90	21	937.2	1,771	55	5.28	3.89	64.17	95.21	0.51 in/h
24	Rain Bird XCZ-150-PRB-COM	1-1/2"	Area for Dripline	63.36		207.8	1,738	10	0.96	20.70	31.66	51.79	0.48 in/h
25	Hunter ICV-G-BSP	2"	Turf Rotor	69.50	10	556.4	1,631	55	4.03	2.14	61.17	82.62	0.67 in/h
26	Hunter ICV-G-BSP	2"	Turf Rotor	93.60	17	759.8	1,592	55	5.04	3.56	63.60	92.42	0.42 in/h
27	Hunter ICV-G-BSP	2"	Turf Rotor	94.00	16	678.4	1,329	55	3.54	3.60	62.15	88.89	0.40 in/h
28	Hunter ICV-G-BSP	2"	Turf Rotor	73.90	11	472.8	1,477	55	3.28	2.35	60.62	82.92	0.70 in/h
29	Hunter ICV-G-BSP	2"	Turf Rotor	79.20	16	654.7	1,689	55	5.04	2.62	62.66	88.34	0.50 in/h
30	Hunter ICV-G-BSP	2"	Turf Spray	93.70	55	882.7	1,707	40	7.89	3.57	51.45	82.78	1.47 in/h
31	Hunter ICV-G-BSP	2"	Turf Rotor	73.90	11	510.4	1,741	55	2.95	2.35	60.30	84.92	0.69 in/h
32	Hunter ICV-G-BSP	2"	Turf Rotor	92.80	19	821.0	1,315	55	8.59	3.48	67.08	93.26	0.45 in/h
33	Hunter ICV-G-BSP	2"	Turf Rotor	94.20	18	732.0	1,135	55	3.63	3.62	62.25	86.42	0.46 in/h
34	Hunter ICV-G-BSP	2"	Turf Rotor	95.90	18	715.6	869.0	55	6.01	3.79	64.80	86.20	0.45 in/h
35	Hunter ICV-G-BSP	2"	Turf Rotor	85.10	12	529.5	764.0	55	2.79	2.94	60.73	79.75	0.71 in/h
36	Hunter ICV-G-BSP	2"	Turf Rotor	58.40	12	485.6	791.2	55	7.10	1.62	63.72	79	1.03 in/h
37	Hunter ICV-G-BSP	2"	Turf Spray	45.58	32	618.3	812.1	40	7.13	1.02	48.15	62.25	1.28 in/h
38	Hunter ICV-G-BSP	2"	Turf Rotor	85.10	12	522.1	864.8	55	3.32	2.94	61.26	81.47	0.68 in/h
39	Hunter ICV-G-BSP	2"	Turf Rotor	98.50	17	714.8	527.0	55	4.20	4.05	63.25	81.18	0.42 in/h
40	Hunter ICV-G-BSP	2"	Turf Rotor	65.00	12	457.2	393.0	55	2.34	1.93	59.28	73.08	0.46 in/h
	Common Wire						5,724						

WATERING SCHEDULE

NUMBER	MODEL	TYPE	PRECIP	IN./WEEK	MIN./WEEK	GAL./WEEK	GAL./DAY
1	Hunter ICV-G-BSP	Turf Rotor	0.48 in/h	1	124	11,222	2,806
2	Hunter ICV-G-BSP	Turf Rotor	0.44 in/h	1	136	9,452	3,151
3	Hunter ICV-G-BSP	Turf Rotor	1.02 in/h	1	59	3,446	861.4
4	Hunter ICV-G-BSP	Turf Rotor	0.73 in/h	1	83	6,316	1,579
5	Hunter ICV-G-BSP	Turf Rotor	0.74 in/h	1	82	6,790	1,697
6	Hunter ICV-G-BSP	Turf Rotor	0.59 in/h	1	102	8,333	2,083
7	Rain Bird XCZ-150-PRB-COM	Area for Dripline	0.48 in/h	1	125	9,275	2,319
8	Hunter ICV-G-BSP	Turf Rotor	0.92 in/h	1	65	6,006	1,502
9	Hunter ICV-G-BSP	Turf Rotor	0.69 in/h	1	87	6,821	1,705
10	Hunter ICV-G-BSP	Turf Rotor	0.62 in/h	1	97	7,653	1,913
11	Hunter ICV-G-BSP	Turf Rotor	1.10 in/h	1	55	5,154	1,288
12	Hunter ICV-G-BSP	Turf Rotor	0.65 in/h	1	92	6,799	1,700
13	Hunter ICV-G-BSP	Turf Rotor	0.71 in/h	1	85	5,908	1,477
14	Hunter ICV-G-BSP	Turf Rotor	0.97 in/h	1	62	5,344	1,336
15	Hunter ICV-G-BSP	Turf Rotor	0.65 in/h	1	93	6,194	1,548
16	Hunter ICV-G-BSP	Turf Rotor	0.54 in/h	1	112	10,651	2,663
17	Hunter ICV-G-BSP	Turf Rotor	0.73 in/h	1	82	7,298	1,825
18	Hunter ICV-G-BSP	Turf Rotor	0.65 in/h	1	93	6,464	1,616
19	Hunter ICV-G-BSP	Turf Spray	1.18 in/h	1	52	2,028	507
20	Hunter ICV-G-BSP	Turf Rotor	0.52 in/h	1	115	10,707	2,677
21	Hunter ICV-G-BSP	Turf Rotor	0.70 in/h	1	86	6,355	2,118
22	Hunter ICV-G-BSP	Turf Rotor	0.88 in/h	1	69	4,223	1,408
23	Hunter ICV-G-BSP	Turf Rotor	0.51 in/h	1	118	11,434	3,811
24	Rain Bird XCZ-150-PRB-COM	Area for Dripline	0.48 in/h	1	125	7,920	2,640
25	Hunter ICV-G-BSP	Turf Rotor	0.67 in/h	1	90	6,255	2,085
26	Hunter ICV-G-BSP	Turf Rotor	0.42 in/h	1	142	13,291	4,430
27	Hunter ICV-G-BSP	Turf Rotor	0.40 in/h	1	150	14,100	4,700
28	Hunter ICV-G-BSP	Turf Rotor	0.70 in/h	1	86	6,355	2,118
29	Hunter ICV-G-BSP	Turf Rotor	0.50 in/h	1	121	9,583	3,194
30	Hunter ICV-G-BSP	Turf Spray	1.47 in/h	1	41	3,842	1,281
31	Hunter ICV-G-BSP	Turf Rotor	0.69 in/h	1	88	6,503	2,168
32	Hunter ICV-G-BSP	Turf Rotor	0.45 in/h	1	134	12,435	4,145
33	Hunter ICV-G-BSP	Turf Rotor	0.46 in/h	1	132	12,434	4,145
34	Hunter ICV-G-BSP	Turf Rotor	0.45 in/h	1	135	12,947	4,316
35	Hunter ICV-G-BSP	Turf Rotor	0.71 in/h	1	85	7,234	2,411
36	Hunter ICV-G-BSP	Turf Rotor	1.03 in/h	1	59	3,446	1,149
37	Hunter ICV-G-BSP	Turf Spray	1.28 in/h	1	47	2,142	714.1
38	Hunter ICV-G-BSP	Turf Rotor	0.68 in/h	1	89	7,574	2,525
39	Hunter ICV-G-BSP	Turf Rotor	0.42 in/h	1	142	13,987	4,662
40	Hunter ICV-G-BSP	Turf Rotor	0.46 in/h	1	132	8,580	2,860
		TOTALS:			3,872	312,500	93,133

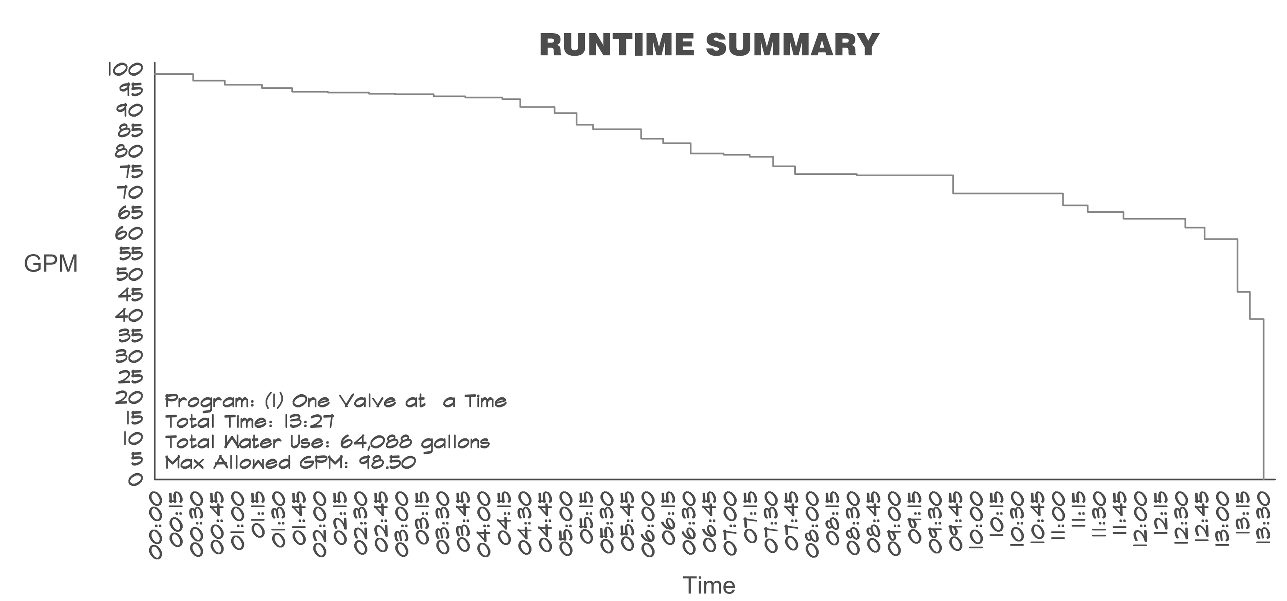

RUNTIME SCHEDULE

TIME	CONTROLLER	NUMBER	ACTION
00:00	C	39	ON
00:28	C	39	OFF
00:28	C	23	ON
00:51	C	23	OFF
00:51	C	34	ON
01:18	C	34	OFF
01:18	C	16	ON
01:40	C	16	OFF
01:40	C	33	ON
02:06	C	33	OFF
02:06	C	27	ON
02:36	C	27	OFF
02:36	C	30	ON
02:44	C	30	OFF
02:44	C	11	ON
02:55	C	11	OFF
02:55	C	26	ON
03:23	C	26	OFF
03:23	C	20	ON
03:46	C	20	OFF
03:46	C	32	ON
04:13	C	32	OFF
04:13	C	8	ON
04:26	C	8	OFF
04:26	C	1	ON
04:51	C	1	OFF
04:51	C	17	ON
05:07	C	17	OFF
05:07	C	14	ON
05:19	C	14	OFF
05:19	C	35	ON
05:36	C	35	OFF
05:36	C	38	ON
05:54	C	38	OFF
05:54	C	5	ON
06:10	C	5	OFF
06:10	C	6	ON
06:30	C	6	OFF
06:30	C	29	ON
06:54	C	29	OFF
06:54	C	10	ON
07:13	C	10	OFF
07:13	C	9	ON
07:30	C	9	OFF
07:30	C	4	ON
07:46	C	4	OFF
07:46	C	7	ON
08:31	C	7	OFF
08:31	C	12	ON
08:49	C	12	OFF
08:49	C	21	ON
09:06	C	21	OFF
09:06	C	28	ON
09:23	C	28	OFF
09:23	C	31	ON
09:41	C	31	OFF
09:41	C	2	ON
10:08	C	2	OFF
10:08	C	13	ON
10:25	C	13	OFF
10:25	C	18	ON
10:43	C	18	OFF
10:43	C	25	ON
11:01	C	25	OFF
11:01	C	15	ON
11:19	C	15	OFF
11:19	C	40	ON
11:45	C	40	OFF
11:45	C	24	ON
12:30	C	24	OFF
12:30	C	22	ON
12:44	C	22	OFF
12:44	C	3	ON
12:56	C	3	OFF
12:56	C	36	ON
13:08	C	36	OFF
13:08	C	37	ON
13:17	C	37	OFF
13:17	C	19	ON
13:27	C	19	OFF

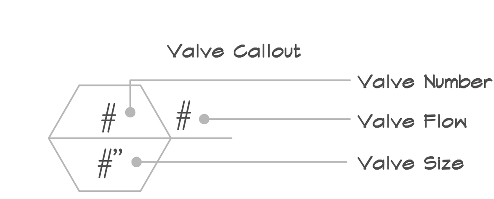

	IRRIGATION NOTES:
1.	ALL IRRIGATION WORK TO BE PERFORMED BY A TEXAS LICENSED IRRIGATOR.
2.	INSTALL ALL VALVES IN AN ARMOR VALVE BOX WITH COVER OR EQUAL. VALVE SHOULD BE CENTERED IN BOX TO FACILITATE ACCESS TO SOLENOID ASSEMBLY AND MANUAL OPERATORS.
3.	PIPE AS SHOWN IS DIAGRAMMATIC BUT SHOULD BE REASONABLY FOLLOWED. LOCATION OF SPRINKLER HEADS SHALL BE ESTABLISHED BY THE CONTRACTOR BUT DESIGN SPACING MAY NOT BE EXCEEDED WITHOUT AUTHORIZATION FROM THE OWNER.
4.	ALLOW A MINIMUM OF 6" CLEARANCE FROM ANY STRUCTURE, INCLUDING SIDEWALKS, CURBS, BUILDINGS, ETC. WHEN INSTALLING SPRINKLER HEADS
5.	ALL SLEEVES SHALL BE SCH. 40 PVC, SHALL EXTEND 12" BEYOND EDGE OF PAVEMENT OR STRUCTURE, SHALL BE PLACED 24" BELOW TOP OF PAVEMENT AND SHALL BE CAPPED WITH PVC CAPS. DO NOT PENETRATE STRUCTURES WITHOUT PRIOR APPROVAL. LOCATION OF SLEEVES TO BE MARKED IN PAVEMENT WITH AN "S" CONCRETE STAMP.
6.	AFTER INSTALLATION, SYSTEM MUST BE BALANCED BY ADJUSTING PRESSURE REGULATOR CONTROLS ON VALVES.
7.	SYSTEM SHALL REQUIRE A MINIMUM OF 50 LBS. STATIC PRESSURE FOR SYSTEM TO OPERATE PROPERLY. IRRIGATION CONTRACTOR SHALL NOTIFY THE OWNER OF PRESSURE DEFICIENCIES OR IF THE PRIMARY WATER SUPPLY LINES ARE SMALLER THAN 4" AND/OR LONGER THAN 120' FROM THE SOURCE. NOTIFY THE OWNER OF ANY OTHER SITE PROBLEMS THAT MAY ALTER THE EFFECTIVENESS OF THE SYSTEM.
8.	THE CONTRACTOR SHALL FAMILIARIZE HIMSELF WITH THE SPECIFICATIONS FOR THE LANDSCAPE IRRIGATION SYSTEM.
9.	THE CONTRACTOR SHALL PREPARE "AS-BUILT" DRAWINGS IN AN AUTOCAD FORMAT WHICH SHALL SHOW LOCATIONS OF MAIN LINES, VALVES, CONTROLLERS AND SLEEVES. THE AUTOCAD DRAWINGS SHALL BE DELIVERED ON DISC TO THE OWNERS REPRESENTATIVE FOR REVIEW AND APPROVAL.
10.	ALL SPLICES ARE TO BE CAPPED WITH TAN KING LOW VOLTAGE CONNECTORS OR EQUAL. NO FIELD SPLICES WILL BE PERMITTED. WHERE SPLICES ARE NECESSARY ALL MUST BE IN VALVE BOXES.
11.	NO PIPE CROSSES ARE PERMITTED.
12.	HAND DIG TRENCHES WITHIN THE DRIP LINE OF EXISTING TREES.
13.	ALL MAIN & LATERAL LINES SHALL BE SET AT A MINIMUM DEPTH OF 18" TO THE TOP OF THE PIPE. ALL LATERAL LINES SHALL BE SET AT A MINIMUM DEPTH OF 18" TO THE TOP OF THE PIPE. ALL ELECTRIC VALVES SHALL BE SET TO A DEPTH OF 18" TO THE TOP OF ADJACENT PIPE.
14.	ALL PIPING TO BE LAID WITH LETTERING UP.
15.	ALL 3/4" - 2" LATERAL PIPING SHALL BE CLASS 200 SOLVENT WELD PVC.
16.	PROVIDE THRUST BLOCKS AS PER DETAILS . ALL THRUST BLOCKING SHALL BE INSPECTED AND APPROVED BY THE OWNER PRIOR TO BACKFILL.
17.	ALL VALVE WIRING SHALL BE #14 UF.
18.	PROVIDE PRESSURE GAUGE ON INLET AND OUTLET.
19.	PROVIDE QUICK COUPLERS AS INDICATED.
20.	DO NOT LOCATE VALVE BOXES IN MULTI-USE ATHLETIC FIELD AREAS. ALL PIPES GOING TO AND FROM RP AND PUMP SHALL BE SCH. 80 PVC PIPE. WRAP PIPE WITH 1/8"x2" INSULATION TAPE #4217-W3 BY NU-CALGON WHOLESALE INC. ST. LOUIS, MO. 63146.
21.	ALL SPRINKLER HEADS SHALL BE SET LEVEL TO FINISH GRADES, PLACED VERTICAL IN THE GROUND, ADJUSTED TO COVER HEAD TO HEAD WITH MINIMAL SPRAY IN AREAS NOT IRRIGATED.
22.	TEN (10) DAYS PRIOR TO START OF CONSTRUCTION THE CONTRACTOR SHALL VERIFY THE WATER STATIC PRESSURE. CONFIRM WITH OWNER THE WATER STATIC PRESSURE BEFORE COMMENCING WORK.
23.	THE CONTRACTOR SHALL PROVIDE TWO QUICK COUPLER KEYS TO MATCH QUICK COUPLER SPECIFIED.
24.	THE CONTRACTOR SHALL OBTAIN THE PROPER PERMIT FOR IRRIGATION WORK FROM THE CITY OF McALLEN PRIOR TO COMMENCING WORK.

CRITICAL ANALYSIS

Generated:	2018-07-11 08:22
P.O.C. NUMBER: 01	
Water Source Information:	
FLOW AVAILABLE	
Water Meter Size:	3"
Flow Available:	225.00 gpm
PRESSURE AVAILABLE	
Static Pressure at POC:	50.00 psi
Elevation Change:	5.00 ft
Service Line Size:	12"
Length of Service Line:	30.00 ft
Booster Pump pressure provided:	100.00 psi
Pressure Available:	148.00 psi
DESIGN ANALYSIS	
Maximum Station Flow:	98.50 gpm
Flow Available at POC:	225.00 gpm
Residual Flow Available:	126.50 gpm
Critical Station:	23
Design Pressure:	55.00 psi
Friction Loss:	4.80 psi
Fittings Loss:	0.48 psi
Elevation Loss:	0.00 psi
Loss through Valve:	3.89 psi
Pressure Req. at Critical Station:	64.16 psi
Loss for Fittings:	1.48 psi
Loss for Main Line:	14.76 psi
Loss for POC to Valve Elevation:	0.00 psi
Loss for Backflow:	11.00 psi
Loss for Master Valve:	0.50 psi
Loss for Water Meter:	2.28 psi
Critical Station Pressure at POC:	94.18 psi
Pressure Available:	148.00 psi
Residual Pressure Available:	53.82 psi

CITY OF McALLEN
SOFTBALL FIELD FACILITIES
MUNICIPAL PARK
McALLEN, TEXAS

McALLEN Parks & Recreation

HALFF
14800 ST. MARY'S LANE, SUITE 160
HOUSTON, TEXAS 77079-2943
TEL (713) 588-2450
FAX (281) 310-5259

Revision No.	Date	Description
1	04-23-2018	ADDENDUM NO. 1

100% CONSTRUCTION DOCUMENT

Project No.:	33348.001
Issued:	02/14/2018
Drawn By:	GG
Checked By:	GG
Scale:	N.T.S.
Sheet Title	IRRIGATION NOTES
Sheet Number	I1.0.1

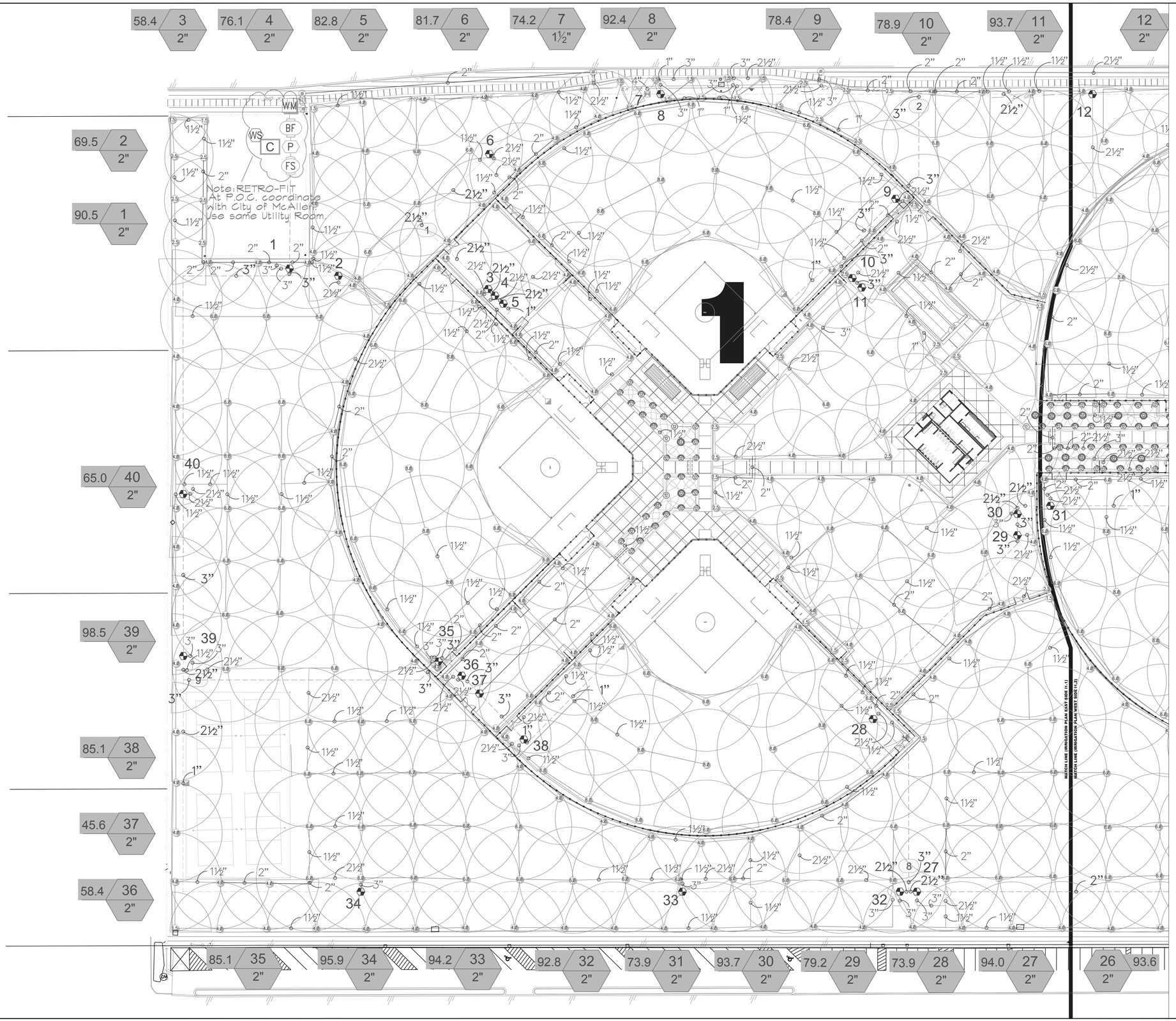

CITY OF McALLEN
SOFTBALL FIELD FACILITIES
MUNICIPAL PARK
McALLEN, TEXAS

McALLEN Parks & Recreation

HALFF
14800 ST. MARY'S LANE, SUITE 160
HOUSTON, TEXAS 77079-2943
TEL (281) 496-4400
FAX (281) 310-5259

Revision No.	Date	Description
1	04-23-2018	ADDENDUM NO. 1

STATE OF TEXAS
GERARDO GARCIA
21601
LICENSED IRRIGATOR
04/18/2018

100% CONSTRUCTION DOCUMENT

Project No.:	33348.001
Issued:	02/14/2018
Drawn By:	GG
Checked By:	GG
Scale:	1" = 40' - 0"

Sheet Title

IRRIGATION WEST SIDE PLAN

I1.1

Sheet Number

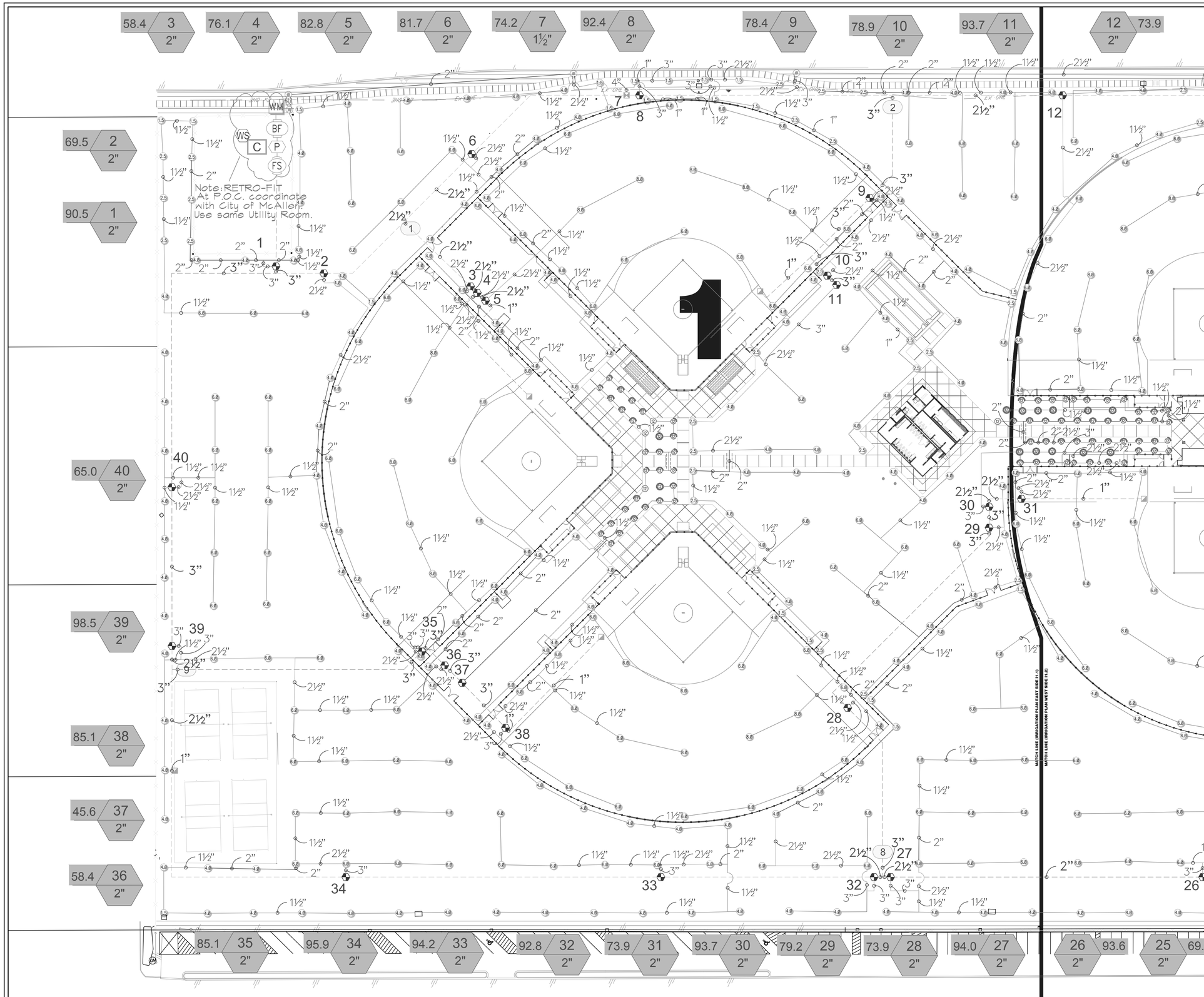

CITY OF McALLEN
SOFTBALL FIELD FACILITIES
MUNICIPAL PARK
McALLEN, TEXAS

McALLEN Parks & Recreation

HALFF
14800 ST. MARY'S LANE, SUITE 160
HOUSTON, TEXAS 77079-2943
TEL (281) 496-4400
FAX (281) 310-5259

Revision No.	Date	Description
1	04-23-2018	ADDENDUM NO. 1

STATE OF TEXAS
GERARDO GARCIA
21601
LICENSED IRRIGATOR
04/18/2018

100% CONSTRUCTION DOCUMENT

Project No.:	33348.001
Issued:	02/14/2018
Drawn By:	GG
Checked By:	GG
Scale:	1" = 40' - 0"

Sheet Title

IRRIGATION WEST SIDE PLAN (W/O COVERAGE)

I1.1.1

Sheet Number

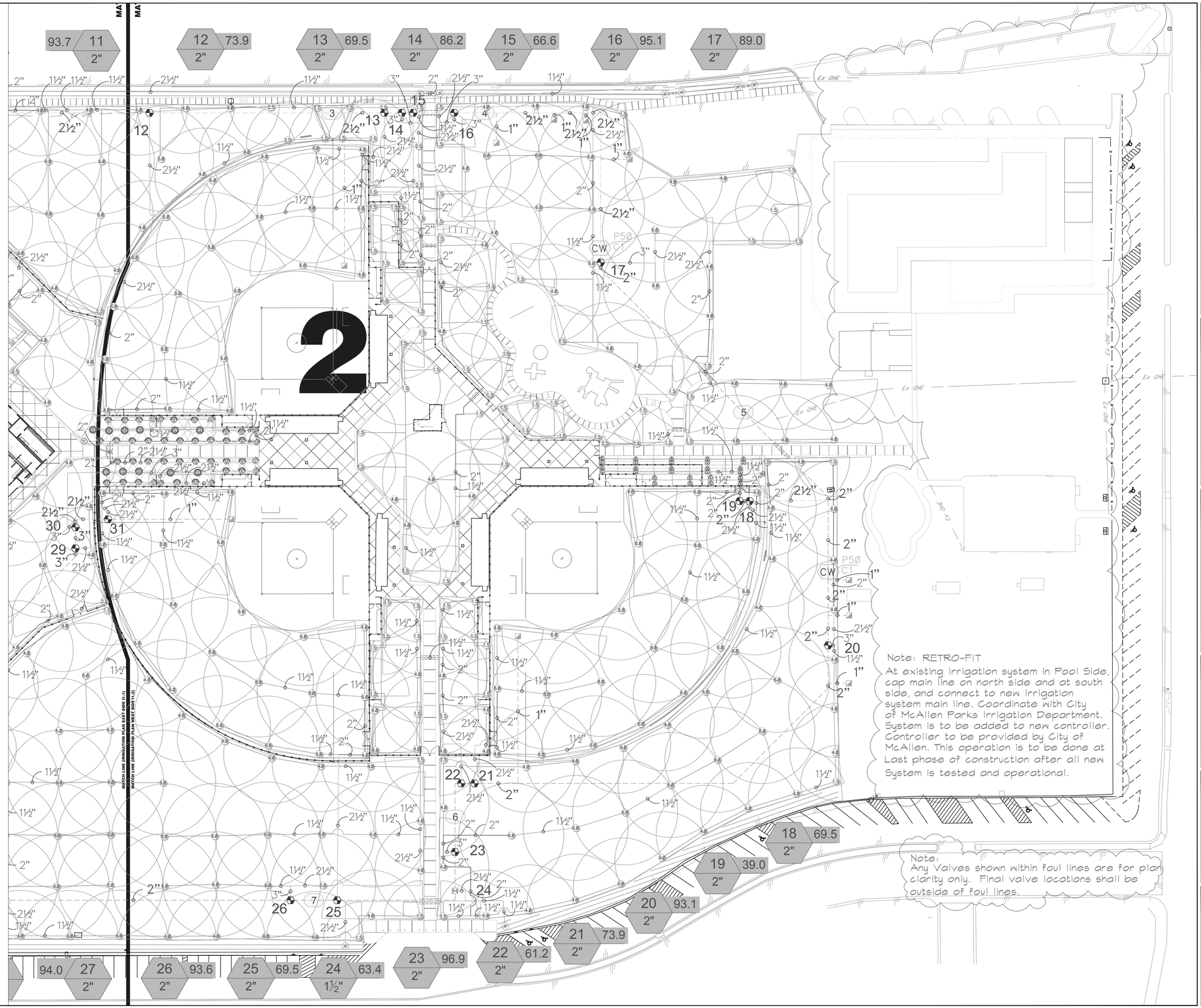

CITY OF McALLEN
SOFTBALL FIELD FACILITIES
MUNICIPAL PARK
McALLEN, TEXAS

McALLEN Parks & Recreation

HALFF
14800 ST. MARY'S LANE, SUITE 160
HOUSTON, TEXAS 77079-2943
TEL (281) 496-2400
FAX (281) 310-5259

Revision		
No.	Date	Description
1	04-23-2018	ADDENDUM NO. 1

STATE OF TEXAS
GERARDO GARCIA
21601
LICENSED IRRIGATOR
06/18/2018

100% CONSTRUCTION DOCUMENT

Project No.:	33348.001
Issued:	02/14/2018
Drawn By:	GG
Checked By:	GG
Scale:	1" = 40' - 0"

Sheet Title

IRRIGATION EAST SIDE PLAN

I1.2

Sheet Number

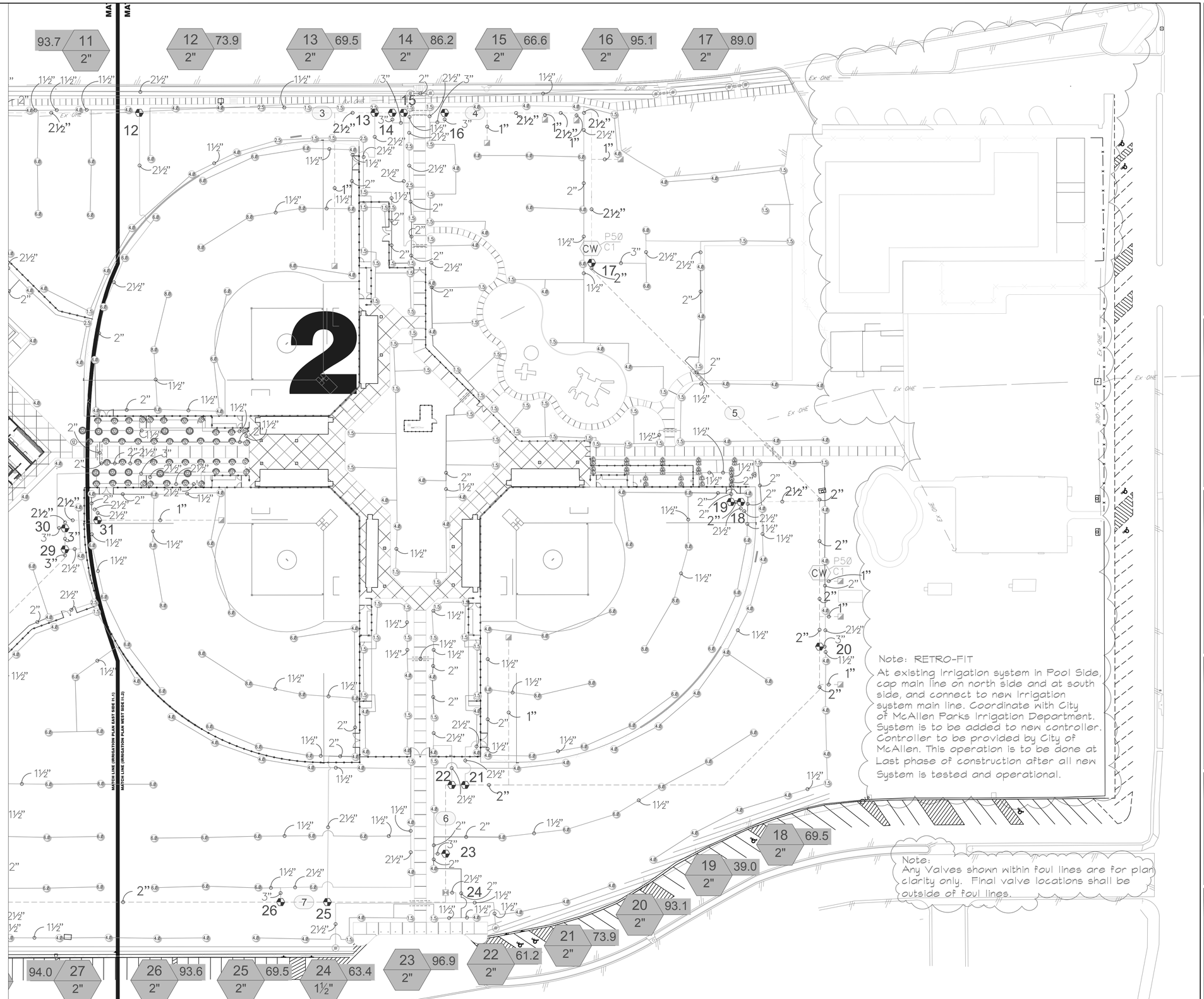

CITY OF McALLEN
SOFTBALL FIELD FACILITIES
MUNICIPAL PARK
McALLEN, TEXAS

McALLEN Parks & Recreation

HALFF
14800 ST. MARY'S LANE, SUITE 160
HOUSTON, TEXAS 77079-2943
TEL (281) 496-4400
FAX (281) 310-5259

Revision		
No.	Date	Description
1	04-23-2018	ADDENDUM NO. 1

STATE OF TEXAS
GERARDO GARCIA
21601
LICENSED IRRIGATOR
04/18/2018

100%
CONSTRUCTION
DOCUMENT

Project No.:	33348.001
Issued:	02/14/2018
Drawn By:	GG
Checked By:	GG
Scale:	1" = 40' - 0"

Sheet Title

IRRIGATION EAST SIDE PLAN
(W/O COVERAGE)

I1.2.1

Sheet Number

PUMP STATION SPECIFICATIONS:
NAME: MUNICIPAL GIRLS BASEBALL PARK
STATION MODEL: WMBV-5000Q-2-15-208-3-150-140
STATION TOTAL PERFORMANCE: 150GPM @ 140PSI
DYNAMIC INLET PRESSURE: 40PSI
BOOST PRESSURE: 100PSI
REGULATED DISCHARGE PRESSURE: 140PSI
PUMP HORSEPOWER:
PUMP NO.1: 15HP (3600RPM)
CHECK VALVE SIZES:
PUMP NO.1 3"
ISOLATION VALVE SIZES:
DISCHARGE ISOLATION VALVE SIZE: 3"
DISCHARGE MANIFOLD SIZE: 3"

POWER REQUIREMENTS: 208V, 60 HZ, 3PHZ, 55FLA
EXHAUST FAN REQUIREMENTS: 240CFM

STATION COMPONENTS:
A PUMP AND MOTOR
B CHECK VALVE
C PRESSURE TRANSDUCER WITH GAUGE
D BYPASS VALVE
E FLOW SENSOR
F TEMP SENSOR
G STATION FAN HOOD MOUNTED
H PUMP INTAKE ISOLATION VALVE
I PAINTED PUMP STATION ENCLOSURE (SANDSTONE)
J VFD WITH PUMP CONTROLLER
K PAINTED PUMP STATION BASE (SANDSTONE)
L PUMP DISCHARGE ISOLATION VALVE
M STATION DISCHARGE ISOLATION VALVE
N DEAD-FRONT DISCONNECT PANEL

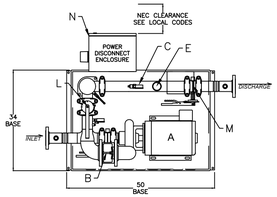

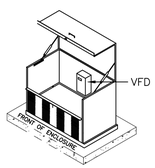

ENCLOSURE
ISOMETRIC VIEW

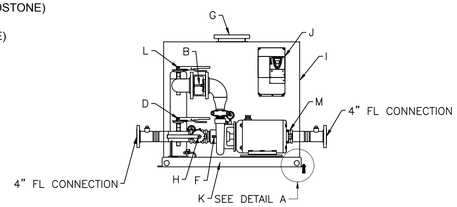

DETAIL "A"
CONCRETE ANCHOR
TYPICAL (4) LOCATIONS

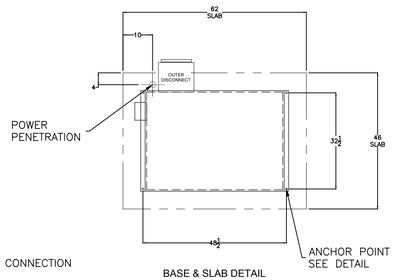

BASE & SLAB DETAIL

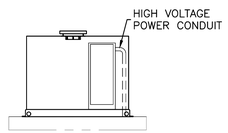

BACK OF ENCLOSURE

DRAWN BY: PJB	DATE: 04/10/18	TITLE: MUNICIPAL GIRLS BASEBALL PARK IRRIGATION BOOSTER PUMP
CHECKED BY:	DATE:	
THIS DRAWING AND DESIGN, IS THE PROPERTY OF WATERTRONICS AND IS NOT TO BE REPRODUCED IN WHOLE OR PART, NOR EMPLOYED FOR ANY PURPOSE OTHER THAN SPECIFICALLY PERMITTED IN WRITING BY WATERTRONICS. THIS DRAWING LOANED AND SUBJECT TO RETURN ON DEMAND		WATERTRONICS A LINDSAY COMPANY
	SCALE: NTS	SHEET 1 OF 4 SHEETS
	JOB NO.:	DRAWING NO. PRST13492

7 BOOSTER PUMP STATION

N.T.S. DETAIL-FILE

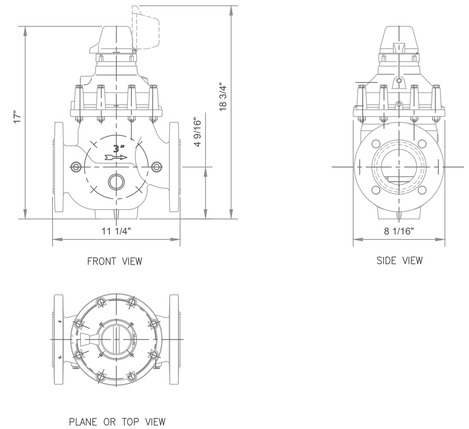

9 HYDROMETER 4" ARAD

N.T.S. DETAIL-FILE

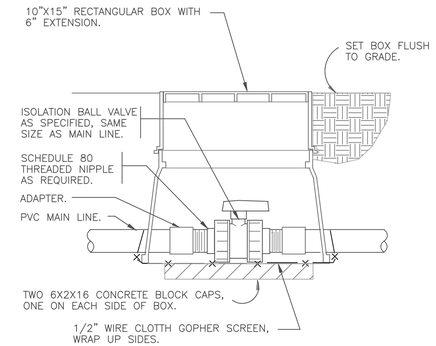

8 TRUE UNION BALL ISOLATION VALVE

1 1/2" = 1'-0" 328406.33-04

Hunter®

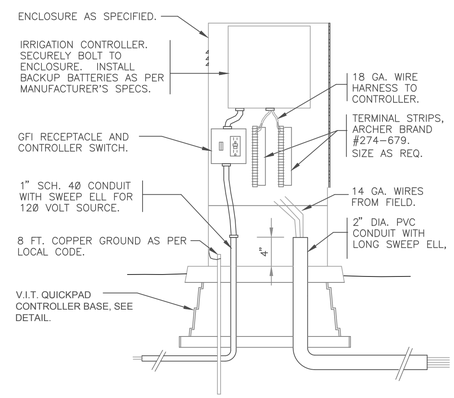

6 PEDESTAL MOUNT CONTROLLER W/ VIT BASE

N.T.S. FX-IR-FX-CONT-01

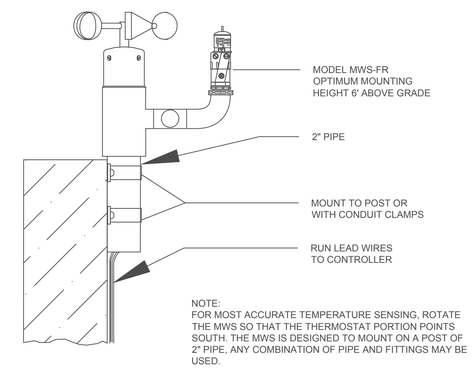

NOTE:
FOR MOST ACCURATE TEMPERATURE SENSING, ROTATE THE MWS SO THAT THE THERMOSTAT PORTION POINTS SOUTH. THE MWS IS DESIGNED TO MOUNT ON A POST OF 2" PIPE, ANY COMBINATION OF PIPE AND FITTINGS MAY BE USED.

5 MINI-WEATHER STATION

3" = 1'-0" DETAIL-FILE

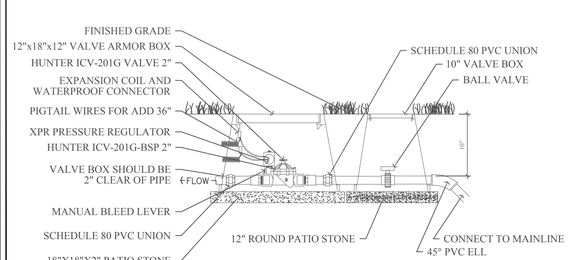

NOTES:

1. MAINTAIN A 2"-3" GAP BETWEEN THE BOTTOM OF THE VALVE AND THE TOP OF THE PATIO STONE.
2. PROVIDE 36" OF SLACK FOR CONTROL WIRES AND NEATLY COIL.
3. PROVIDE ONE EXTRA 14 GA. RED WIRE AT EACH VALVE FOR FUTURE USE.

4 ELECTRIC REMOTE CONTROL VALVE

1 1/2" = 1'-0" DETAIL-FILE

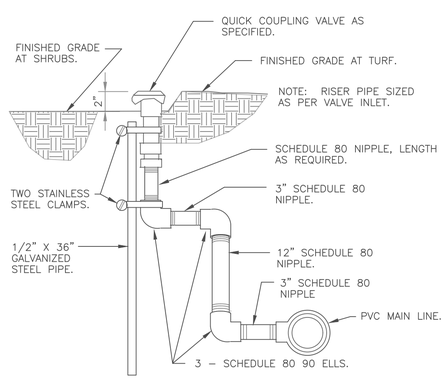

3 QUICK COUPLING VALVE AT GRADE

1 1/2" = 1'-0" 328406.43-01

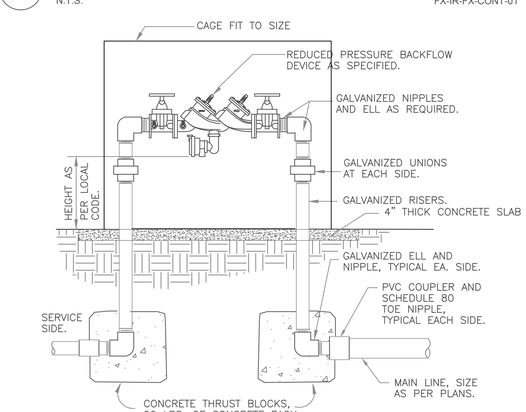

2 REDUCED PRESSURE BACKFLOW DEVICE

1" = 1'-0" DETAIL-FILE

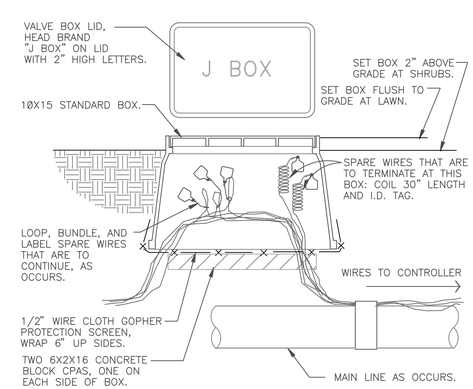

1 WIRE BUNDLE JUNCTION BOX

1 1/2" = 1'-0" 328409.79-01

CITY OF McALLEN
SOFTBALL FIELD FACILITIES
MUNICIPAL PARK
McALLEN, TEXAS

McALLEN Parks & Recreation

HALFF
14800 ST. MARY'S LANE, SUITE 160
HOUSTON, TEXAS 77079-2943
TEL (281) 496-4040
FAX (281) 310-5259

Revision No.	Date	Description
1	04-23-2018	ADDENDUM NO. 1

STATE OF TEXAS
GERARDO GARCIA
21601
LICENSED IRRIGATOR
04/19/2018

100% CONSTRUCTION DOCUMENT

Project No.:	33348.001
Issued:	02/14/2018
Drawn By:	GG
Checked By:	GG
Scale:	N.T.S.
Sheet Title	IRRIGATION DETAILS

I5.0
Sheet Number

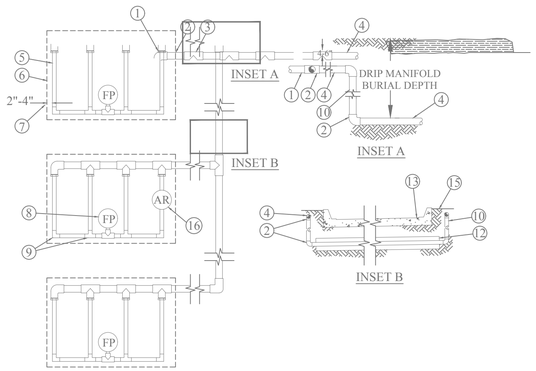

NOTES:
1. DISTANCE BETWEEN LATERAL ROWS AND EMITTER SPACING TO BE BASED ON SOIL TYPE, PLANT MATERIALS AND CHANGES IN ELEVATION. SEE INSTALLATION SPECIFICATIONS ON RAIN BIRD WEB SITE (WWW.RAINBIRD.COM) FOR SUGGESTED SPACING.
2. LENGTH OF LONGEST DRIPLINE LATERAL SHOULD NOT EXCEED THE MAXIMUM SPACING SHOWN IN THE ACCOMPANYING TABLE.
3. INSTALL AIR RELIEF VALVE AT HIGH POINTS IN DRIP LATERAL.
4. WHEN USING 17MM INSERT FITTINGS WITH DESIGN PRESSURE OVER 50PSI, IT IS RECOMMENMDED THAT STAINLESS STEEL CLAMPS BE INSTALLED ON EACH FITTING.
5. DRIP SHALL BE PLACED UNDER LANDSCAPE FABRIC IN LANDSCAPE BEDS WITH DECOMPOSED GRANITE.

XFS Dripline Maximum Lateral Lengths (Feet)

Inlet Pressure psi	12" Spacing Nominal Flow (gph)		18" Spacing Nominal Flow (gph)		24" Spacing Nominal Flow (gph)	
	0.6	0.9	0.6	0.9	0.6	0.9
15	273	155	314	250	424	322
20	318	169	353	294	508	368
30	360	230	413	350	586	414
40	395	255	465	402	652	474
50	417	285	528	420	720	488
60	460	290	596	455	780	514

1. PVC SUPPLY HEADER
2. PVC SCH 40 TEE OR EL (TYPICAL)
3. BARB X MALE FITTING: RAIN BIRD XFF-MA FITTING (TYPICAL)
4. PVC DRIP MANIFOLD FROM RAIN BIRD CONTROL ZONE VALVE KIT (SIZED TO MEET LATERAL FLOW DEMAND)
5. SUB-SURFACE DRIPLINE: RAIN BIRD XF SERIES DRIPLINE (TYPICAL)
   POTABLE: XFS DRIPLINE
   NON-POTABLE: XFSP DRIPLINE
6. PERIMETER OF AREA
7. PERIMETER DRIPLINE PIPE TO BE INSTALLED 2"-4" FROM PERIMETER OF AREA
8. FLUSH POINT (TYPICAL) – SEE RAIN BIRD XFS DETAILS FOR FLUSH POINT INSTALLATION
9. BARB X BARB INSERT TEE OR EL: RAIN BIRD XFF-TEE OR RAIN BIRD XFF-ELBOW (TYPICAL)
10. PVC RISER PIPE
11. PVC SUPPLY MANIFOLD
12. PVC SCH 40 SLEEVE PIPE SIZED TWICE THE SIZE OF MANIFOLD PIPE SIZE
13. PAVEMENT AND CURB
14. TURF OR MULCH
15. FINISH GRADE
16. ½" AIR RELIEF VALVE: RAIN BIRD MODEL: RV050
    SEE RAIN BIRD XFS DETAILS FOR AIR RELIEF INSTALLATION

15 XPS SUB-SURFACE DRIPLINE / TYPICAL ISLAND LAYOUT

N.T.S. DETAIL-FILE

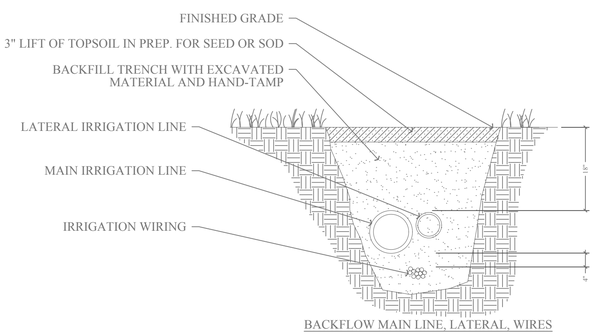

BACKFLOW MAIN LINE, LATERAL, WIRES

NOTE:
1. THE CONTRACTOR SHALL BE RESPONSIBLE FOR ENSURING THAT THE FINISHED GRADE IS FLUSH.

14 IRRIGATION TRENCH

N.T.S. DETAIL-FILE

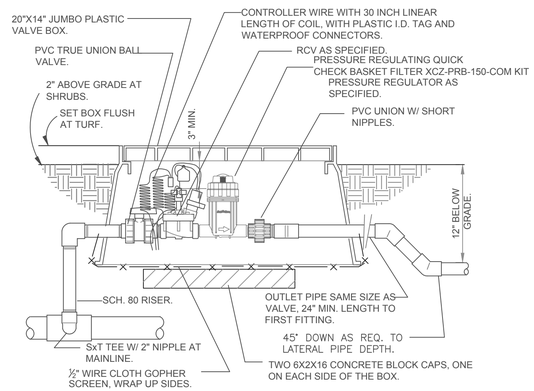

13 1-1/2" DRIP VALVE/FILTER/REGULATOR

1 1/2" = 1'-0" DETAIL-FILE

*When using larger GPM nozzles, beware of high friction loss in swing joints.

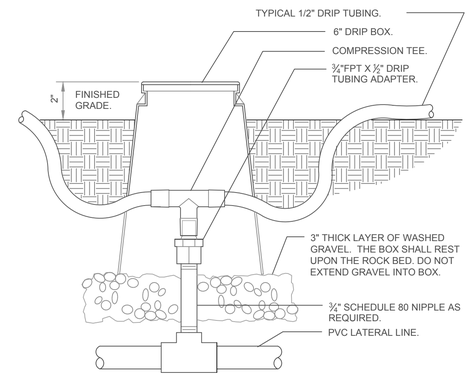

12 ZONE CONTROL

3" = 1'-0" DETAIL-FILE

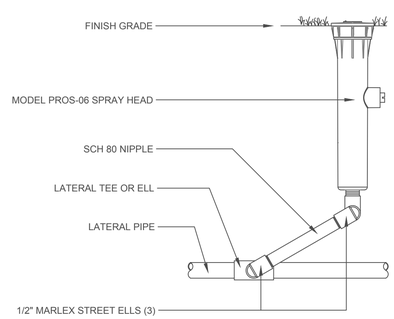

11 PROS-06 SPRAY HEAD WITH MARLEX STREET ELLS

3" = 1'-0" FX-IR-HUNT-SPRA-30

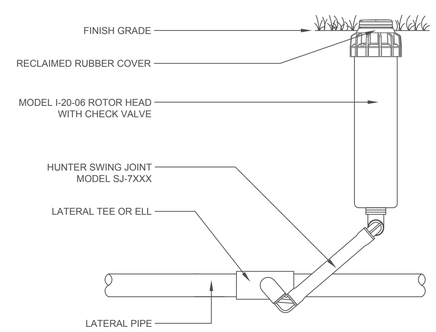

10 I-20-06 ROTOR HEAD WITH SJ-7XXX

3" = 1'-0" FX-IR-HUNT-ROTR-13

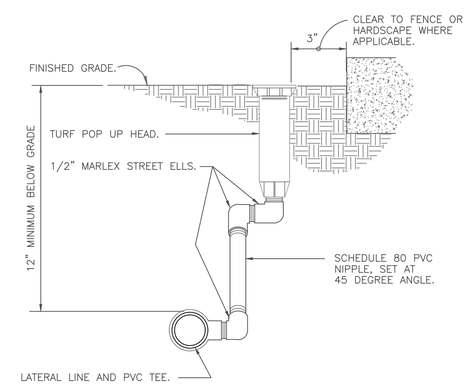

9 TURF SPRAY MARLEX ASSEMBLY

3" = 1'-0" FX-IR-FX-HEAD-04

CITY OF McALLEN
SOFTBALL FIELD FACILITIES
MUNICIPAL PARK
McALLEN, TEXAS

HALFF
14800 ST. MARY'S LANE, SUITE 160
HOUSTON, TEXAS 77079-2943
TEL (281) 496-4400
FAX (281) 310-5259

Revision No.	Date	Description
1	04-23-2018	ADDENDUM NO. 1

STATE OF TEXAS
GERARDO GARCIA
21601
LICENSED IRRIGATOR
04/18/2018

100% CONSTRUCTION DOCUMENT

Project No.:	33348.001
Issued:	02/14/2018
Drawn By:	GG
Checked By:	GG
Scale:	N.T.S.
Sheet Title	IRRIGATION DETAILS
Sheet Number	I5.1